RENAULT

1 Engine and peripherals

10A ENGINE AND CYLINDER BLOCK ASSEMBLY

11A TOP AND FRONT OF ENGINE

12A FUEL MIXTURE

12B TURBOCHARGING

13A FUEL SUPPLY

13B DIESEL INJECTION

13C PREHEATING

14A ANTIPOLLUTION

16A STARTING - CHARGING

17A IGNITION

17B PETROL INJECTION

X84, and B84 or C84 or E84 or G84 or K84 or L84 or S84

77 11 318 022 **APRIL 2009** **Edition Anglaise**

"The repair methods given by the manufacturer in this document are based on the technical specifications current when it was prepared.

The methods may be modified as a result of changes introduced by the manufacturer in the production of the various component units and accessories from which his vehicles are constructed."

All copyrights reserved by Renault.

The reproduction or translation in part of whole of the present document, as well as the use of the spare parts reference numbering system, are prohibited without the prior written consent of Renault.

© Renault s.a.s 2008

17C LPG INJECTION

19A COOLING

19B EXHAUST

19C TANK

19D ENGINE MOUNTING

X84, and B84 or C84 or E84 or G84 or K84 or L84 or S84

77 11 318 022 **APRIL 2009** **Edition Anglaise**

"The repair methods given by the manufacturer in this document are based on the technical specifications current when it was prepared.

The methods may be modified as a result of changes introduced by the manufacturer in the production of the various component units and accessories from which his vehicles are constructed."

All copyrights reserved by Renault.

The reproduction or translation in part of whole of the present document, as well as the use of the spare parts reference numbering system, are prohibited without the prior written consent of Renault.

© Renault s.a.s 2008

Mégane II - Section 1

Contents

Page

10A ENGINE AND CYLINDER BLOCK ASSEMBLY

Crankshaft seal at timing end Removal - Refitting 10A-1

Crankshaft seal at gearbox end : Removal - Refitting 10A-4

Sump: Removal - Refitting 10A-6

Conrod bearing shell: Removal - Refitting 10A-30

Engine oil: Draining - Refilling 10A-43

Oil filter: Removal - Refitting 10A-53

Oil filter unit: Removal - Refitting 10A-59

Exchanger: Removal - Refitting 10A-65

Oil pressure sensor: Removal - Refitting 10A-71

Oil level sensor: Removal - Refitting 10A-77

Oil pump: Removal - Refitting 10A-80

Oil pressure: Check 10A-84

Multifunction support: Removal - Refitting 10A-86

Engine/gearbox assembly: Removal - Refitting 10A-97

Crankshaft position sensor: Removal - Refitting 10A-197

10A ENGINE AND CYLINDER BLOCK ASSEMBLY

Flywheel: Removal - Refitting 10A-198

Drive plate: Removal - Refitting 10A-206

11A TOP AND FRONT OF ENGINE

Final compression pressure: Check 11A-1

Accessories belt: Removal - Refitting 11A-4

Crankshaft accessories pulley: Removal - Refitting 11A-11

Timing belt: Removal - Refitting 11A-18

Timing chain: Removal - Refitting 11A-147

Rocker cover: Removal - Refitting 11A-158

Camshaft: Removal - Refitting 11A-172

Cylinder head: Removal - Refitting 11A-187

Camshaft dephaser: Removal - Refitting 11A-298

Oil decanter: Removal - Refitting 11A-301

Contents

12A FUEL MIXTURE

Specifications 12A-1
Air intake: Description 12A-2
Air resonator: Removal - Refitting 12A-8
Air filter: Replacement 12A-9
Air filter: Removal - Refitting 12A-10
Air filter unit: Removal - Refitting 12A-11
Air flowmeter: Removal - Refitting 12A-26
Engine damper flap: Removal - Refitting 12A-31
Air inlet flap: Removal - Refitting 12A-33
Throttle valve: Removal - Refitting 12A-40
Throttle valve: Cleaning 12A-44
Air inlet duct: Removal - Refitting 12A-46
Inlet manifold: Removal - Refitting 12A-49
Injector holder shim: Removal - Refitting 12A-62
Exhaust manifold - Intake distributor: Removal - Refitting 12A-68
Exhaust manifold: Removal - Refitting 12A-73

12B TURBOCHARGING

Turbocharging: Precautions for repair 12B-1
Turbocharger: Removal - Refitting 12B-4
Turbocharger oil pipe: Removal - Refitting 12B-52
Intercooler: Removal - Refitting 12B-69

13A FUEL SUPPLY

Petrol supply circuit 13A-1
Diesel fuel supply circuit 13A-2
Diesel supply system: Operating diagram 13A-3
Fuel circuit: Operating diagram 13A-4
Manual priming pump: Removal - Refitting 13A-5
Petrol filter: General information 13A-17
Fuel filter: Removal - Refitting 13A-18
Diesel filter: Removal - Refitting 13A-25
Particle filter injector fuel filter: Removal - Refitting 13A-30
Injector rail - Injectors: Removal - Refitting 13A-31
Electric fuel: Checking 13A-36
Fuel flow: check 13A-39

13B DIESEL INJECTION

Specifications 13B-1
Diesel injection: Specifications 13B-7
Diesel injection: Precautions for repair 13B-12
Location of components 13B-26
Diesel injection: List and location of components 13B-42
Diesel injection computer: Removal - Refitting 13B-64
Camshaft position sensor: Removal - Refitting 13B-68
Crankshaft position sensor: Removal - Refitting 13B-73

Contents

13B DIESEL INJECTION

Leak flow from high-pressure pump: Check 13B-79

High pressure pump: Removal - Refitting 13B-80

Fuel flow actuator: Removal - Refitting 13B-114

Fuel pressure regulator: Removal - Refitting 13B-127

Venturi: Removal - Refitting 13B-133

Diesel return pipe: Removal - Refitting 13B-140

Diesel injector fuel return rail: Removal - Refitting 13B-148

Injector rail protector: Removal - Refitting 13B-154

High pressure pipe: Checking 13B-157

High pressure pipes: Removal - Refitting

High-pressure pipe between the pump and rail: Removal - Refitting 13B-160

High-pressure pipe between the rail and injector: Removal - Refitting 13B-181

Injector rail: Removal - Refitting 13B-204

Rail pressure sensor 13B-225

Rail pressure sensor: Removal - Refitting 13B-226

Oxygen sensor: Removal - Refitting 13B-235

Fuel temperature sensor: Removal - Refitting 13B-237

Leak flow from injectors: Check 13B-251

Diesel injector: Removal - Refitting 13B-258

Diesel injector: check 13B-281

13B DIESEL INJECTION

Diesel injector adjustment value 13B-282

Accelerometer: Removal - Refitting 13B-283

13C PREHEATING

Pre/postheating unit: Removal - Refitting 13C-1

Heater plugs Removal - Refitting 13C-2

14A ANTIPOLLUTION

Fuel vapour recirculation circuit: check 14A-1

Fuel vapour canister: Removal - Refitting 14A-3

Fuel vapour canister:Checking 14A-5

Oil vapour rebreathing 14A-7

Oil vapour rebreathing system: Operating diagram 14A-17

Exhaust gas recirculation: Operating diagram 14A-19

Exhaust gas recirculation solenoid valve: Removal - Refitting 14A-23

Exhaust gas recirculation unit: Removal - Refitting 14A-35

Intercooler: Removal - Refitting 14A-43

Exhaust gas recirculation mounting: Removal - Refitting 14A-60

Exhaust gas recirculation assembly: Removal - Refitting 14A-61

Contents

14A ANTIPOLLUTION

Exhaust gas recirculation assembly: Removal - Refitting 14A-78

Exhaust gas recirculation rigid pipe: Removal - Refitting 14A-95

Exhaust gas recirculation solenoid valve: Cleaning 14A-105

16A STARTING - CHARGING

Charging circuit: Identification 16A-1

Starting system: Identification 16A-2

Alternator: Removal - Refitting 16A-3

Starter: Removal - Refitting 16A-21

Alternator pulley: Removal - Refitting 16A-40

17A IGNITION

Coils Removal - Refitting 17A-1

Spark plugs: Removal - Refitting 17A-3

17B PETROL INJECTION

Fuel injection: List and location of components 17B-1

Oxygen sensors: Removal - Refitting 17B-20

Accelerator pedal potentiometer: Removal - Refitting 17B-26

17B PETROL INJECTION

Position and speed sensor 17B-27

Petrol injection computer: Removal - Refitting 17B-30

17C LPG INJECTION

LPG injection: Precautions for repair 17C-1

LPG tank - pipe neck: Removal - Refitting 17C-2

LPG tank: Draining 17C-5

LPG tank: Removal - Refitting 17C-8

LPG expansion valve: Removal - Refitting 17C-12

LPG pressure sensor: Removal - Refitting 17C-15

LPG expansion valve solenoid valve: Removal - Refitting 17C-17

LPG expansion valve outlet union: Removal - Refitting 17C-18

Coolant circuit union: Removal - Refitting 17C-19

LPG injection rail: Removal - Refitting 17C-20

LPG injector: Removal - Refitting 17C-23

LPG computer: Removal - Refitting 17C-24

19A COOLING

Engine cooling: Parts and consumables for the repair work 19A-1

Engine cooling: Precautions for repair 19A-2

Contents

19A COOLING

Engine cooling circuit: Specifications 19A-3

Engine cooling circuit: check 19A-5

Engine cooling circuit: Operating diagram 19A-7

Cooling circuit: Draining - Refilling 19A-15

Cooling radiator: Removal - Refitting 19A-22

Water pump: Removal - Refitting 19A-29

Thermostat: Removal - Refitting 19A-44

Plenum chamber: Removal - Refitting 19A-45

Engine cooling fan assembly: Removal - Refitting 19A-55

Thermoplunger unit: Removal - Refitting 19A-63

Water pump inlet pipe: Removal - Refitting 19A-65

Expansion bottle: Removal - Refitting 19A-69

Electric water pump: Removal - Refitting 19A-76

Coolant temperature sensor: Removal - Refitting 19A-81

19B EXHAUST

Exhaust: Precautions for repair 19B-1

Exhaust: Parts and consumables for the repair work 19B-6

Catalytic pre-converter: Removal - Refitting 19B-29

Catalytic converter: Removal - Refitting 19B-46

19B EXHAUST

Expansion chamber: Removal - Refitting 19B-62

Connector pipe: Removal - Refitting 19B-65

Silencer: Removal - Refitting 19B-74

Particle filter: List and location of components 19B-80

Particle filter: Function 19B-84

Particle filter: Removal - Refitting 19B-85

Particle filter: Cleaning 19B-101

Exhaust gas temperature sensor: Removal - Refitting 19B-106

Exhaust gas pressure sensor: Removal - Refitting 19B-112

Particle filter pressure sensor: Removal - Refitting 19B-114

Particle filter temperature sensors: Removal - Refitting 19B-125

Exhaust fuel injector: Removal - Refitting 19B-137

Exhaust fuel injector cooler: Removal - Refitting 19B-140

Connecting hose: Removal - Refitting 19B-142

19C TANK

Fuel tank: Description 19C-1

Fuel tank: Draining 19C-7

Fuel tank: Removal - Refitting 19C-11

Filler neck: Removal - Refitting 19C-14

Sender unit: Removal - Refitting 19C-15

Pump-sender unit-filter: Removal - Refitting 19C-18

Contents

19C TANK

Petrol filter: General information 19C-20

Fuel level sensor: Checking 19C-21

Additional fuel circuit reservoir: Removal - Refitting 19C-22

Additional fuel circuit petrol pump: Removal - Refitting 19C-24

19D ENGINE MOUNTING

Suspended engine mounting 19D-1

Suspended engine mounting: Tightening torque 19D-3

Left-hand suspended engine mounting: Removal - Refitting 19D-12

Right-hand suspended engine mounting: Removal - Refitting 19D-20

Lower engine tie-bar: Removal - Refitting 19D-36

B84 or C84 or E84 or K84 or L84, and M9R

Tightening torques ▽	
crankshaft seal on the timing end	**47 Nm**

REMOVAL

I - REMOVAL PREPARATION OPERATION

❑ Position the vehicle on a two-post lift (see **Vehicle: Towing and lifting**) (MR 364, 02A, Lifting equipment).

❑ Disconnect the battery (see **Battery: Removal - Refitting**) (MR 364, 80A, Battery).

❑ Remove:

- the front right-hand wheel (see **Wheel: Removal - Refitting**) (MR 364, 35A, Wheels and tyres),
- the front right-hand wheel arch liner (see **Front wheel arch liner: Removal - Refitting**) (MR 365, 55A, Exterior protection).

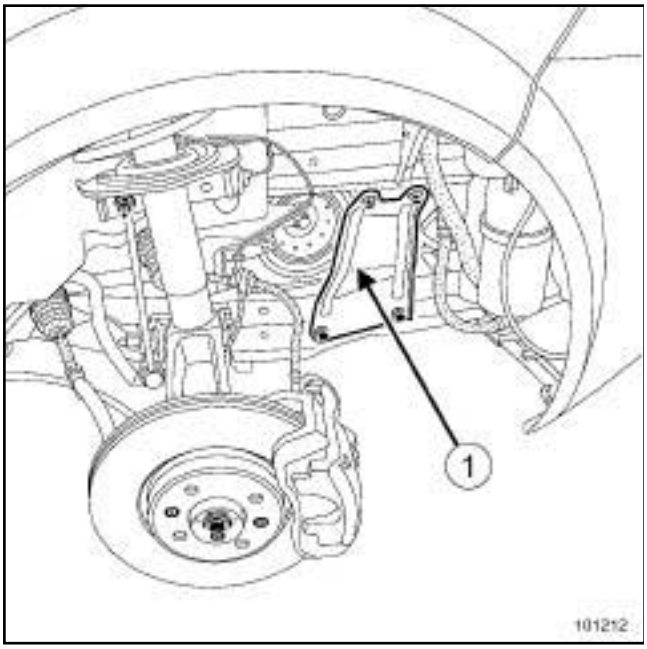

101212

❑ Remove:

- the right-hand side stiffener bolts on the half sub-frame cross member,
- the right-hand side reinforcement from the half sub-frame cross member (**1**) ,
- the accessories belt (see **11A**, **Top and front of engine**, **Accessories belt: Removal - Refitting**, page **11A-4**) .

II - OPERATION FOR REMOVAL OF PART CONCERNED

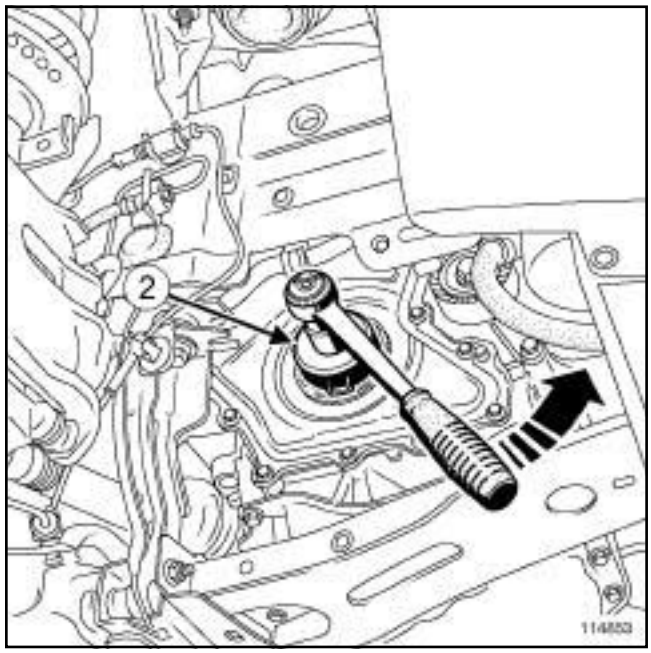

114853

❑ Remove the crankshaft sealing ring using the (**2**) supplied in the spare parts kit for the new gasket.

B84 or C84 or E84 or K84 or L84, and M9R

REFITTING

I - REFITTING PREPARATION OPERATION

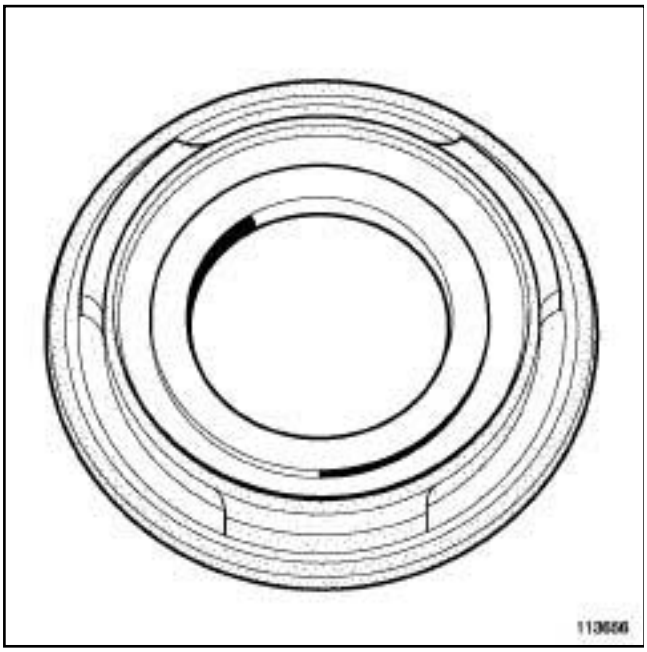

113656

❑

WARNING
The joint faces must be clean, dry and free from grease (avoid finger marks).

II - REFITTING OPERATION FOR PART CONCERNED

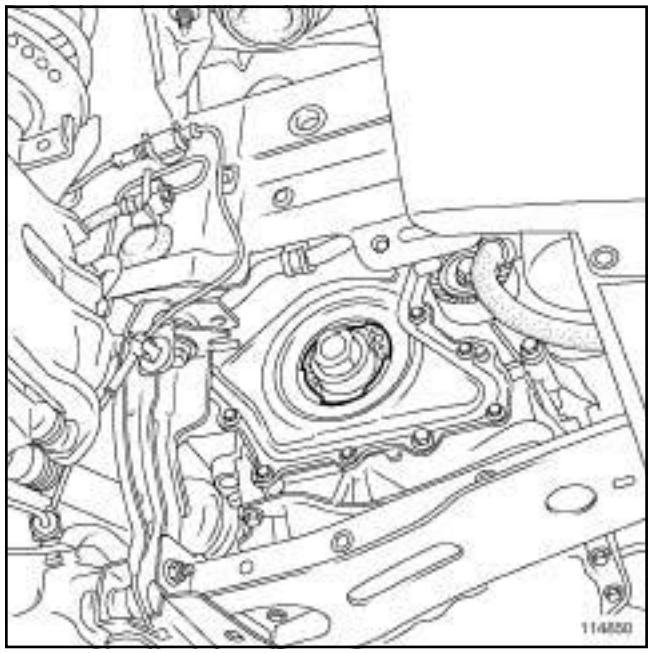

114850

❑ Position the sealing ring notches opposite the notches in the timing cover.

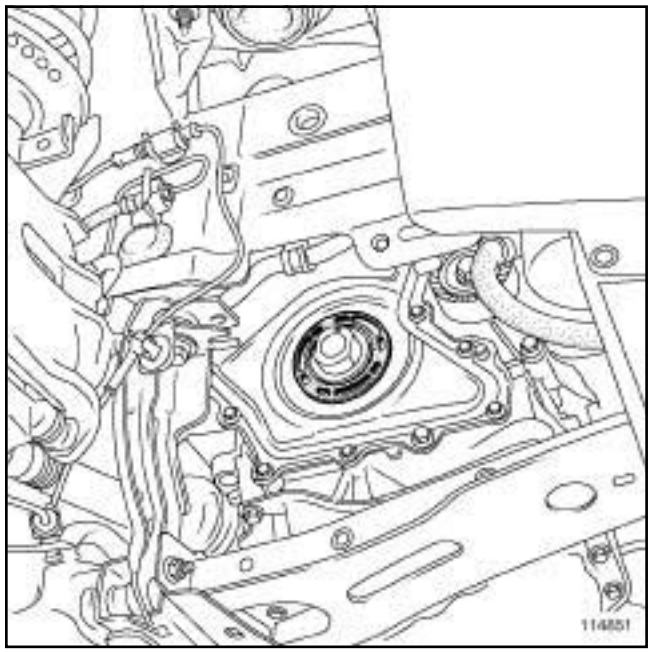

114851

❑ Engage the sealing ring notches in the timing cover notches.

❑ Tighten the sealing ring by hand using the tool supplied in the new gasket spare parts kit.

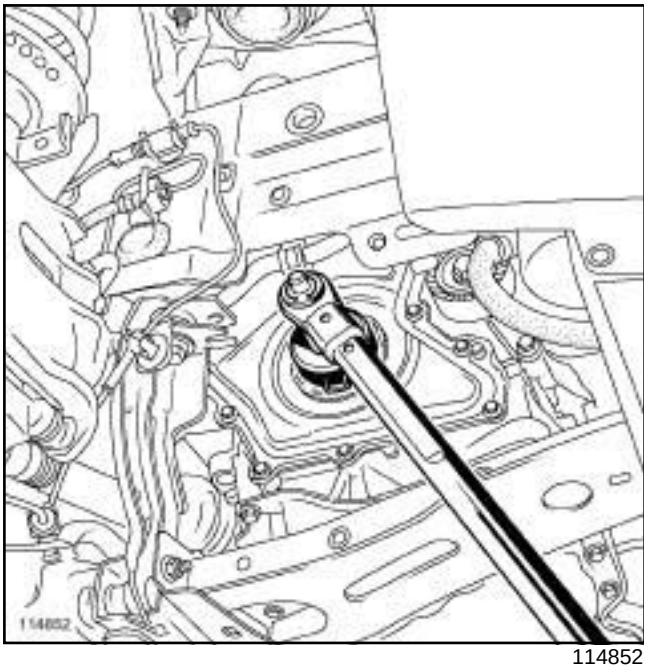

114852

❑ Torque tighten the **crankshaft seal on the timing end (47 Nm)**.

III - FINAL OPERATION.

❑ Refit:

- the accessories belt (see **11A**, **Top and front of engine**, **Accessories belt: Removal - Refitting**, page **11A-4**) ,
- the right-hand side reinforcement to the half sub-frame cross member,
- the right-hand side stiffener bolts on the half sub-frame cross member,
- the front right-hand wheel arch liner (see **Front wheel arch liner: Removal - Refitting**) (MR 365, 55A, Exterior protection),
- the front right-hand wheel (see **Wheel: Removal - Refitting**) (MR 364, 35A, Wheels and tyres).

❑ Connect the battery (see **Battery: Removal - Refitting**) (MR 364, 80A, Battery).

B84 or C84 or E84 or K84 or L84, and M9R

Tightening torques ▽	
bolts (4) and (7) of the crankshaft sealing cover on the cylinder block (initial torque)	**5 Nm**
crankshaft sealing cover bolts on the cylinder block	**10 Nm**

WARNING

It is strictly forbidden to apply any pressure to the engine oil sump. Damage to the sump will irreparably damage the engine by:

- blocking the strainer,
- raising the oil level above maximum, with a risk of engine racing.

REMOVAL

I - REMOVAL PREPARATION OPERATION

❑ Position the vehicle on a two-post lift (see **Vehicle: Towing and lifting**) (MR 364, 02A, Lifting equipment).

❑ Remove the engine covers.

❑ Disconnect the battery (see **Battery: Removal - Refitting**) (MR 364, 80A, Battery).

❑ Remove:

- the engine and gearbox assembly (see **10A**, **Engine and cylinder block assembly**, **Engine/gearbox assembly: Removal - Refitting**, page **10A-97**) ,
- the gearbox (see **Manual gearbox: Removal - Refitting**) (MR 364, 21A, Manual gearbox),
- the clutch disc and pressure plate (see **Mechanism / Disk: Removal - Refitting**) (MR 364, 20A, Clutch),
- the flywheel (see **10A**, **Engine and cylinder block assembly**, **Flywheel: Removal - Refitting**, page **10A-198**) (MR 364, 20A, Clutch).

II - OPERATION FOR REMOVAL OF PART CONCERNED

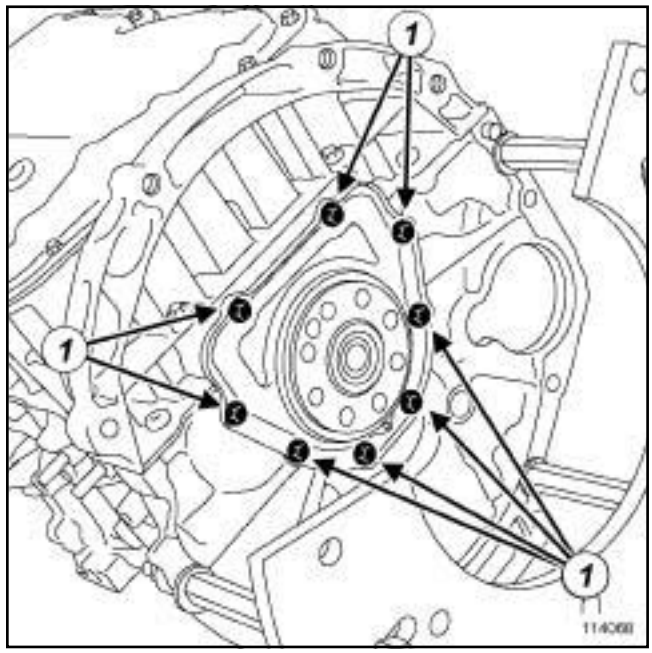

114068

❑ Remove:

- the crankshaft sealing cover bolts (**1**) at the flywheel end,
- the crankshaft sealing cover at the flywheel end.

REFITTING

I - REFITTING PREPARATION OPERATION

❑ Clean and degrease:

- the flywheel end crankshaft sealing cover joint face on the sump,
- the flywheel end seal mating face on the crankshaft.

WARNING

The joint faces must be clean, dry and free from grease (avoid finger marks).

B84 or C84 or E84 or K84 or L84, and M9R

II - REFITTING OPERATION FOR PART CONCERNED

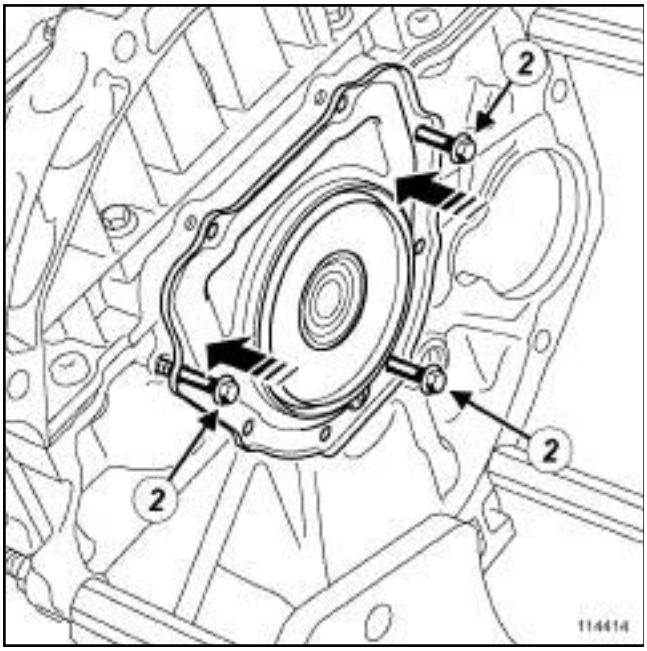

114414

❑ Fit:

- the « seal protector-new sealing cover » assembly on the crankshaft nose,
- the guide bolts (**M6** - length **90 mm**) (**2**) .

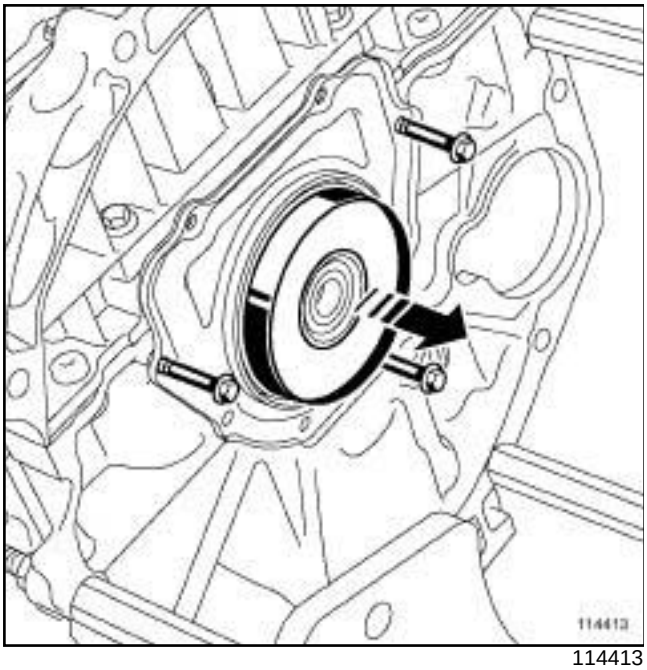

114413

❑ Remove:

- the seal protector ,
- the guide bolts .

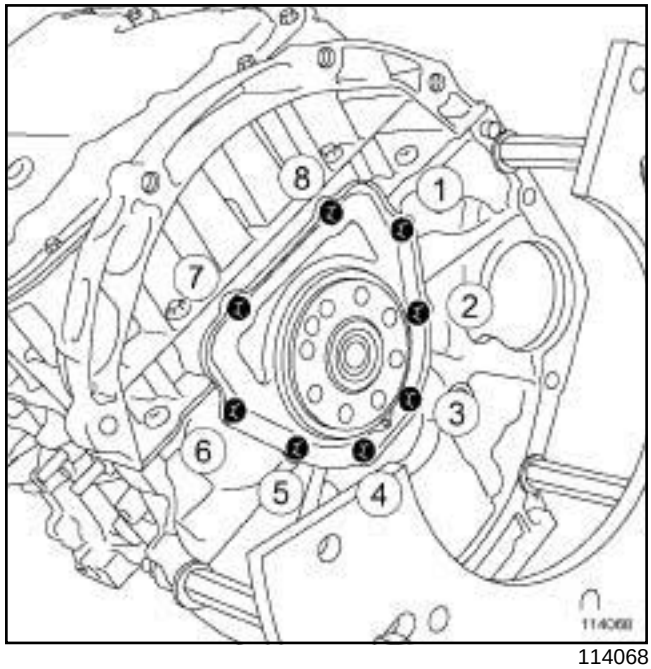

114068

❑ Screw in the crankshaft sealing cover bolts on the cylinder block without tightening them.

❑ Pre-tighten to torque and in order **bolts (4) and (7) of the crankshaft sealing cover on the cylinder block (initial torque) (5 Nm)**.

❑ Torque tighten in order the **crankshaft sealing cover bolts on the cylinder block (10 Nm)**.

III - FINAL OPERATION.

❑ Refit:

- the flywheel (see **10A**, **Engine and cylinder block assembly**, **Flywheel: Removal - Refitting**, page **10A-198**) (MR 364, 20A, Clutch),
- the clutch disc and pressure plate (see **Mechanism / Disk: Removal - Refitting**) (MR 364, 20A, Clutch),
- the gearbox (see **Manual gearbox: Removal - Refitting**) (MR 364, 21A, Manual gearbox),
- the engine and gearbox assembly (see **10A**, **Engine and cylinder block assembly**, **Engine/gearbox assembly: Removal - Refitting**, page **10A-97**) .

❑ Connect the battery (see **Battery : Removal - Refitting**) (MR 364, 80A, Battery).

❑ Refit the engine covers.

B84 or C84 or G84 or S84, and K4J – B84 or C84 or G84 or S84, and K4M

Essential equipment
safety strap(s)

Tightening torques ▽	
sump bolts	**14 Nm**
sump mounting bolts are tightened to torque	**14 Nm**
gearbox - sump assembly bolts	**44 Nm**
sump bolts	**14 Nm**
sump mounting bolts are tightened to torque	**14 Nm**
gearbox - sump assembly bolts	**44 Nm**
sump bolts on the multi-function support	**21 Nm**
half-subframe bolts	**105 Nm**
half-subframe nuts	**21 Nm**
wheel bolts	**110 Nm**

REMOVAL

❑ Position the vehicle on a two-post lift (see **Vehicle: Towing and lifting**) (MR 364, 02A, Lifting equipment).

❑ Disconnect the battery (see **Battery: Removal - Refitting**) (MR 364, 80A, Battery).

❑ Remove the engine undertray.

❑ Drain the engine oil (see **10A**, **Engine and cylinder block assembly**, **Engine oil: Draining - Refilling**, page **10A-43**) (MR 364, 05A, Oil change).

❑ Remove:

- the engine covers,
- the dipstick,
- the front wheels,
- the wheel arch liners,

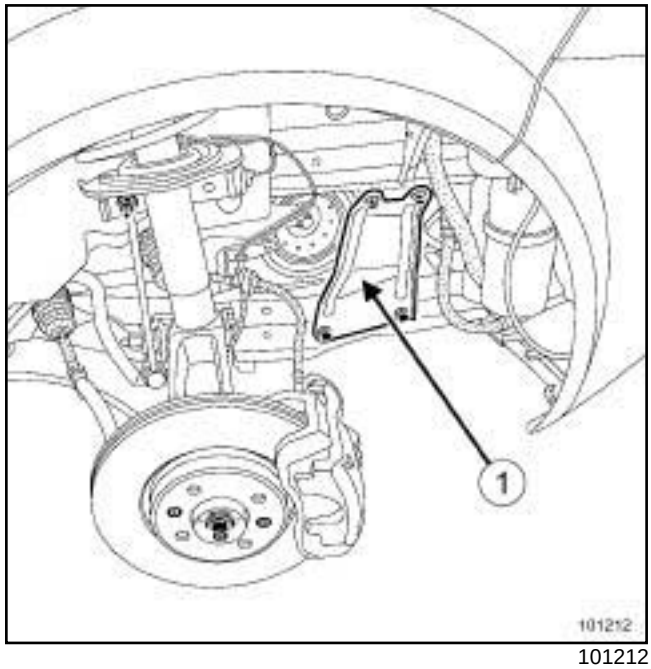

101212

❑ Remove the half-subframe side stiffeners (**1**) .

❑ Fit the cooling assembly to the upper cross member using a **safety strap(s)**.

Note:

When fitting the **safety strap(s)**, be careful:

- not to crush the cooling hoses,
- not to strap up the half-subframe.

B84 or C84 or G84 or S84, and K4J – B84 or C84 or G84 or S84, and K4M

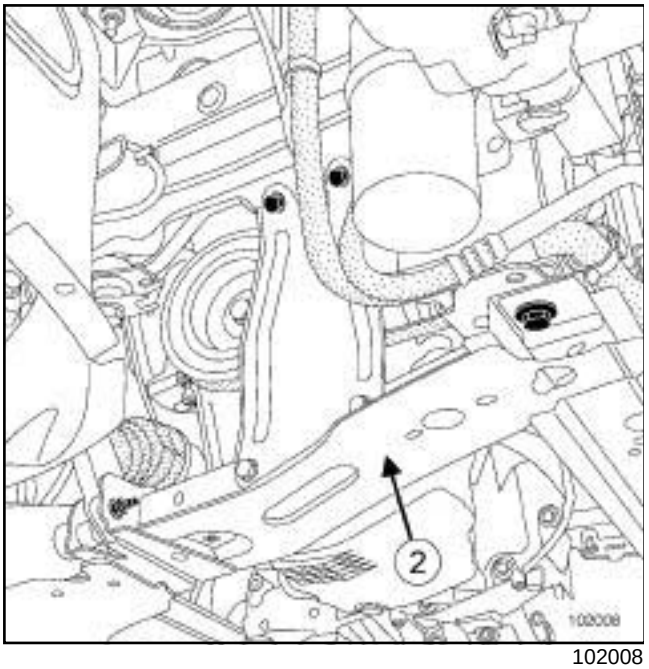

102008

❑ Remove:

- the half-subframe nuts,
- the half-subframe bolts,
- the half sub-frame (**2**) .

❑ Remove:

- the right-hand driveshaft flange bolts from the relay bearing,
- the relay bearing bolts from the sump.

AIR CONDITIONING or CLIMATE CONTROL

❑ Remove the bolt from the sump on the multifunction support.

❑ Remove:

- the sump mounting bolt,
- the sump.

REFITTING

❑ Clean the joint faces with **SUPER CLEANING AGENT FOR JOINT FACES** (see **Vehicle: Parts and ingredients for the repairwork**) (MR 364, 04B, parts or consumables for repair) to dissolve any remaining seal.

❑ Apply the product to the section to be cleaned: wait approximately ten minutes, then remove the residue using a wooden spatula.

WARNING

The joint faces must be clean, dry and free from grease (avoid finger marks).

WARNING

Excess sealant could be squeezed out when the parts are tightened. A mixture of sealant and fluid could cause damage to certain components (engine, radiator, etc.).

B84 or C84 or G84 or S84, and K4J – B84 or C84 or G84 or S84, and K4M

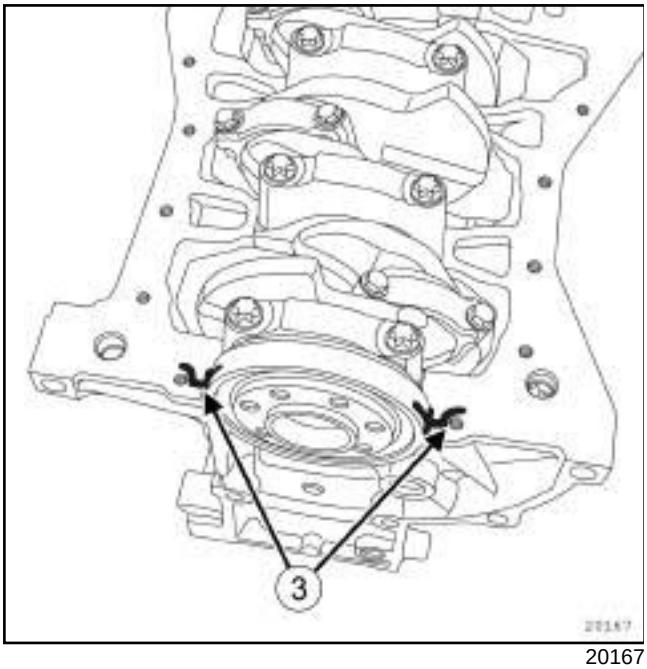

20167

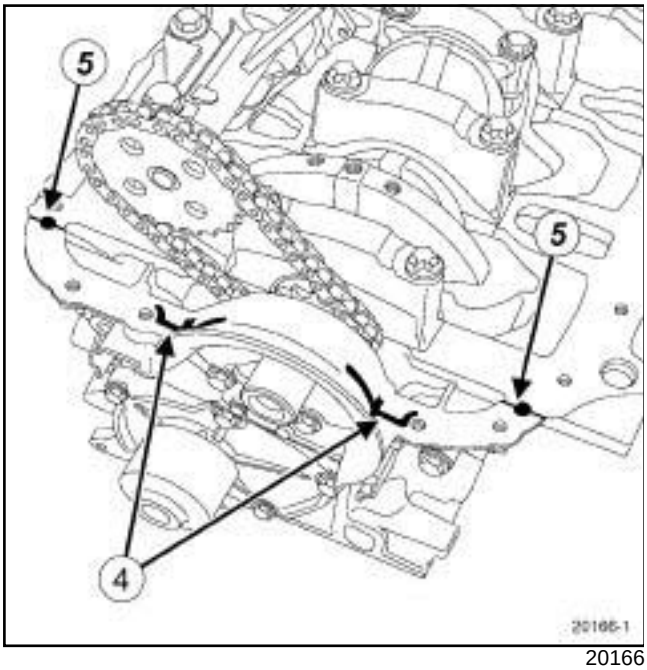

20166

❑ Apply:

- four beads at (**3**) and (**4**) of **ADHESIVE SILICONE SEAL**, with a diameter of **5 mm**.
- two spots of **ADHESIVE SILICONE SEAL** at (**5**) , with a diameter of **7 mm** where the crankshaft and cylinder block closure panels intersect.

I - FIRST FITTING

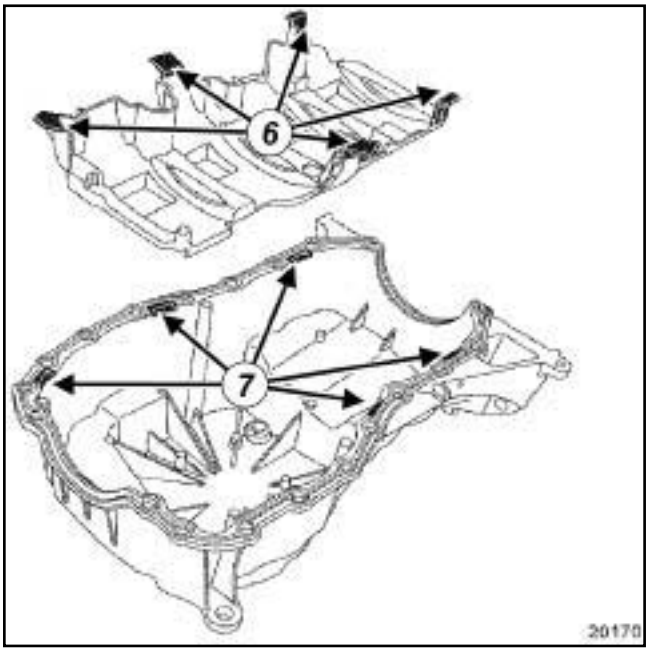

20170

❑ Refit the oil splash plate onto the cylinder block.

Note:

When refitting the sump, check that:

- the oil splash plate tabs (**6**) are positioned correctly in the slots (**7**) ,
- the cylinder block and the flywheel end of the sump are aligned to prevent clutch housing deformation.

B84 or C84 or G84 or S84, and K4J – B84 or C84 or G84 or S84, and K4M

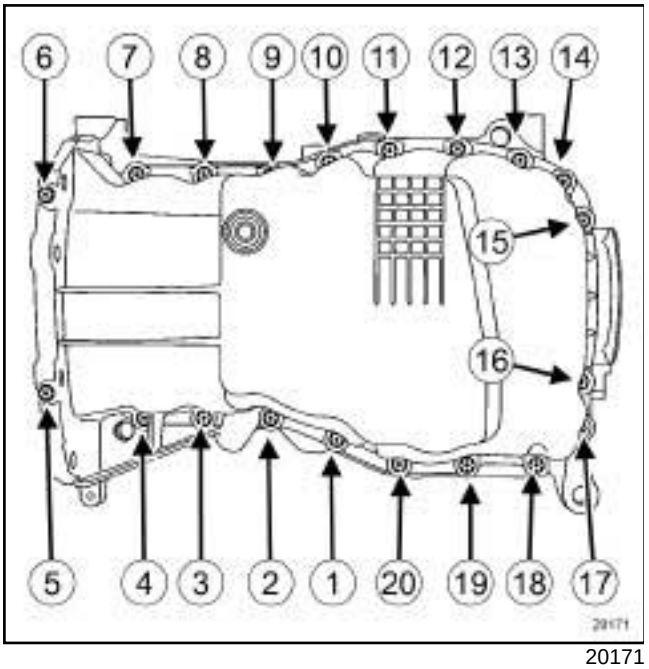

20171

- ❑ Refit the sump with a new seal.
- ❑ Fit:
  - the sump bolts without tightening them,
  - the gearbox - sump assembly bolts without tightening them.
- ❑ Tighten to torque and in order the **sump bolts (14 Nm)**.
- ❑ Check that all the **sump mounting bolts are tightened to torque (14 Nm)**.
- ❑ Torque tighten the **gearbox - sump assembly bolts (44 Nm)**.

B84 or C84 or G84 or S84, and K4J – B84 or C84 or G84 or S84, and K4M

II - SECOND FITTING

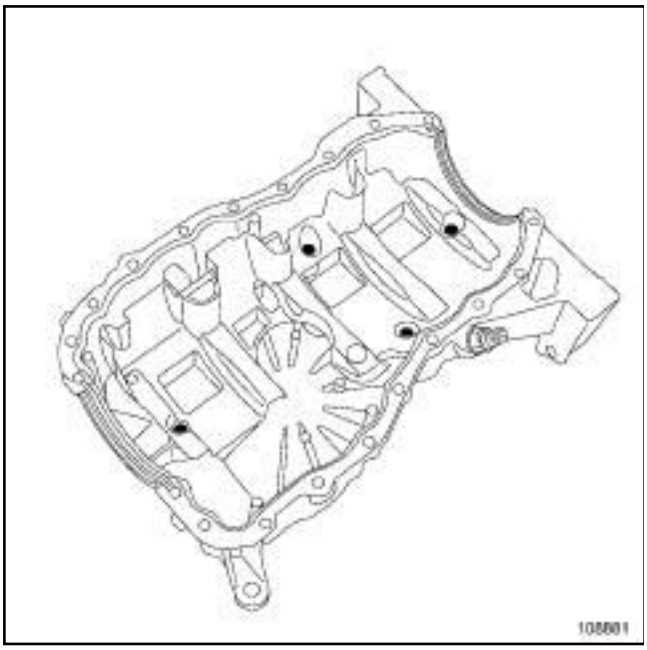

108881

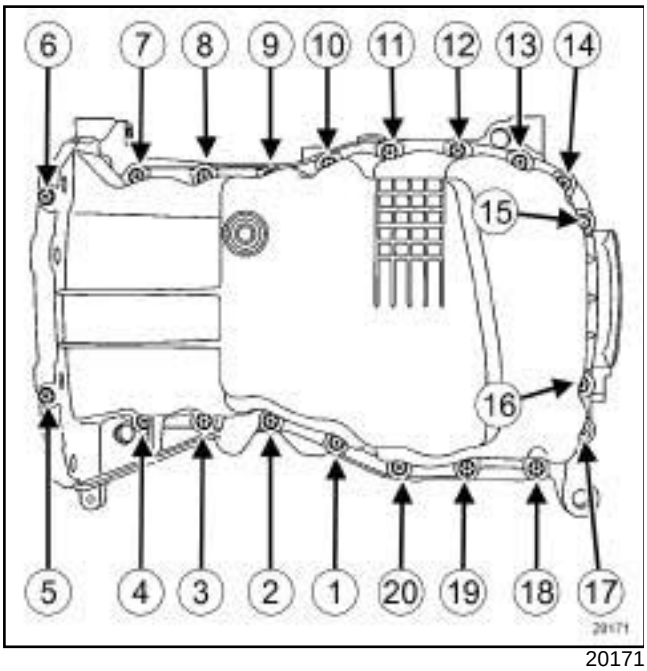

20171

- ❑ Refit the sump with a new seal.
- ❑ Fit:
  - the sump bolts without tightening them,
  - the gearbox - sump assembly bolts without tightening them.
- ❑ Tighten to torque and in order the **sump bolts (14 Nm)**.
- ❑ Check that all the **sump mounting bolts are tightened to torque (14 Nm)**.
- ❑ Torque tighten the **gearbox - sump assembly bolts (44 Nm)**.

III - REFITTING (FOR FIRST AND SECOND FITTINGS)

AIR CONDITIONING or CLIMATE CONTROL

- ❑ Refit the sump mounting bolt on the multifunction support.
- ❑ Tighten to torque the **sump bolts on the multifunction support (21 Nm)**.

- ❑ Torque tighten:
  - the **half-subframe bolts (105 Nm)**,
  - the **half-subframe nuts (21 Nm)**,
  - the **wheel bolts (110 Nm)**.
- ❑ Proceed in the reverse order to removal.
- ❑ Top up the engine oil (see **10A**, **Engine and cylinder block assembly**, **Engine oil: Draining - Refilling**, page **10A-43**) (MR 364, 05A, Oil change).
- ❑ Connect the battery (see **Battery: Removal - Refitting**) (MR 364, 80A, Battery).

B84 or C84 or G84 or S84, and F9Q, and 800 or 803 or 804 or 808 or 816 or 818

Essential equipment
safety strap(s)

Tightening torques ▽	
sump bolts (8), (15), (4), (19), (11), (12)	**18 N.m**
sump bolts (10), (13), (9), (14), (8), (15), (7), (16), (6), (17), (5), (13), (18), (3), (20), (2), (21), (1), (22)	**15 N.m**
half-subframe bolts	**105 N.m**
half-subframe nuts	**21 N.m**

REMOVAL

- ❑ Position the vehicle on a two-post lift (see **Vehicle: Towing and lifting**) (02A, Lifting equipment).
- ❑ Disconnect the battery (see **Battery: Removal - Refitting**) (80A, Battery).
- ❑ Remove the engine undertray.
- ❑ Drain the engine oil (see **10A**, **Engine and cylinder block assembly**, **Engine oil: Draining - Refilling**, page **10A-43**) .
- ❑ Remove:
  - the engine covers,
  - the dipstick,
  - the front wheels (see **Wheel: Removal - Refitting**) (35A, Wheels and tyres),
  - the front wheel arch liners (see **Front wheel arch liner: Removal - Refitting**) (55A, Exterior protection),
  - the engine undertray bolts,
  - the engine undertray.

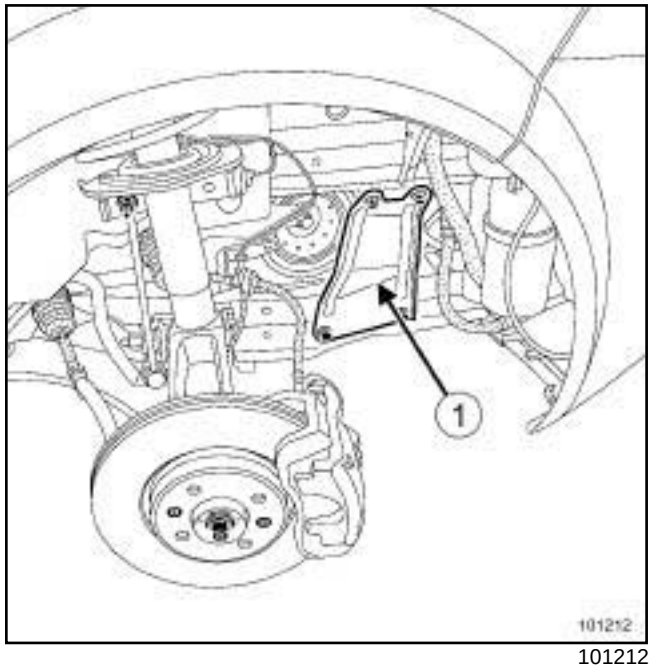

101212

- ❑ Remove the half-subframe side reinforcements (**1**) .
- ❑ Fit the cooling assembly to the upper cross member using a **safety strap(s)**.

> Note:
>
> When fitting the **safety strap(s)**, be careful:
>
> - not to crush the cooling pipes,
>
> - not to strap up the half-subframe.

B84 or C84 or G84 or S84, and F9Q, and 800 or 803 or 804 or 808 or 816 or 818

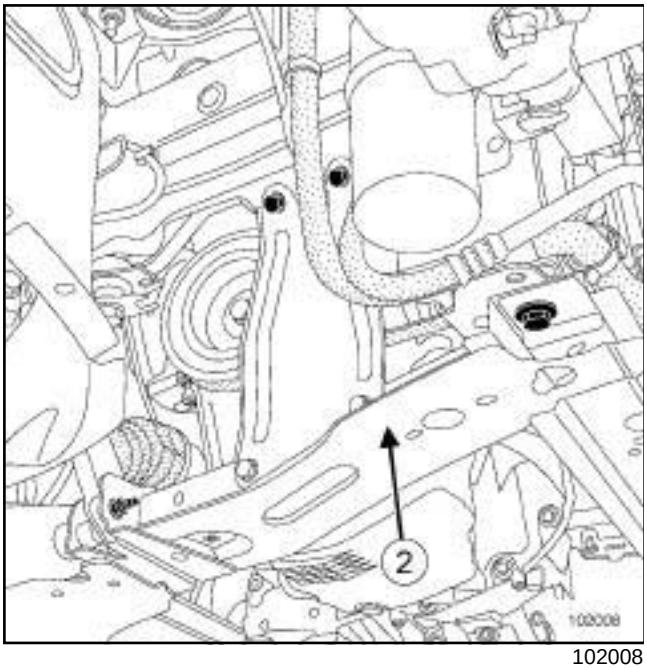

102008

❑ Remove:

- the half-subframe nuts,
- the half-subframe bolts,
- the half sub-frame (**2**) ,
- the lower engine tie-bar bolts,
- the lower engine tie-bar,
- the sump mountings,
- the sump.

REFITTING

❑ Clean the joint faces with **SUPER CLEANING AGENT FOR JOINT FACES** (see **Vehicle: Parts and ingredients for the repairwork**) (04B, Consumables - Products).

❑ Apply the product to the part to be cleaned, wait approximately ten minutes then remove the residue with a wooden spatula.

WARNING

To ensure proper sealing, the gasket surfaces must be clean, dry and not greasy (avoid any finger marks).

WARNING

Applying excess sealant could cause it to be squeezed out when parts are tightened. A mixture of sealant and fluid could damage certain components (engine, radiator, etc.).

Note:

There are two fitting procedures for preparing the cylinder block gasket face when refitting:

- the first fitting procedure is used if **SILICONE ADHESIVE SEALANT** has been used to seal the crankshaft closure panel (see **Vehicle: Parts and ingredients for the repairwork**) (04B, Consumables - Products),
- the second fitting is used if a seal is used for the crankshaft closure panel sealing.

B84 or C84 or G84 or S84, and F9Q, and 800 or 803 or 804 or 808 or 816 or 818

I - FIRST FITTING

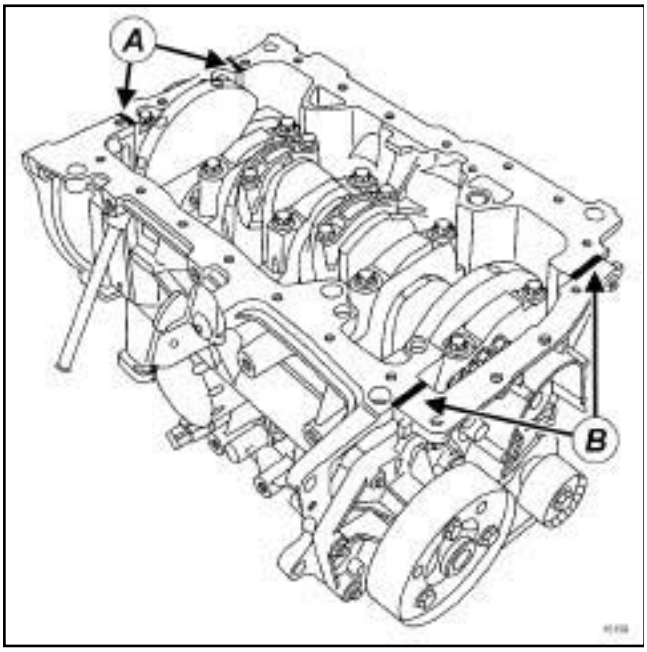

15159

- Apply a bead of **SILICONE ADHESIVE SEALANT** (see **Vehicle: Parts and ingredients for the repairwork**) (04B, Consumables - Products):
  - at (**A**) , both sides of bearing No. 1,
  - at (**B**) , the joint between the cylinder block and the crankshaft closure panel.
- Refit the oil sump fitted with a new seal.

II - SECOND FITTING

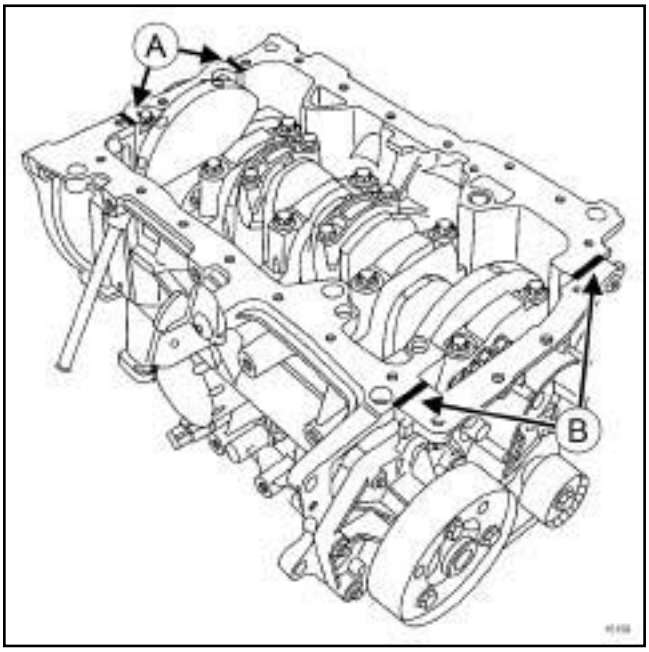

15159

- Apply a bead of **SILICONE ADHESIVE SEALANT** (see **Vehicle: Parts and ingredients for the repairwork**) (04B, Consumables - Products) at (**A**) , on the joint between the crankshaft closure panel and the cylinder block.

> Note:
>
> Do not cut the two crankshaft closure panel seal tabs which sit higher than the cylinder block gasket face (**B**) .

- Refit the oil sump fitted with a new seal.

B84 or C84 or G84 or S84, and F9Q, and 800 or 803 or 804 or 808 or 816 or 818

III - REFITTING (FOR THE FIRST AND SECOND FITTINGS)

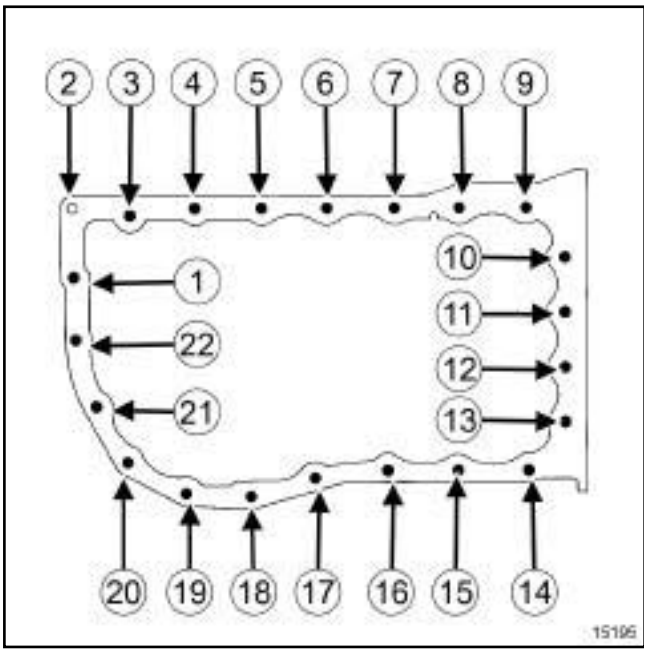

15195

❑ Stage 1:

- Torque tighten in order the **sump bolts (8), (15), (4), (19), (11), (12) (18 N.m)**.

- Stage 2:

- Torque tighten in order the **sump bolts (10), (13), (9), (14), (8), (15), (7), (16), (6), (17), (5), (13), (18), (3), (20), (2), (21), (1), (22) (15 N.m)**.

❑ Refit the lower engine tie-bar (see **19D**, **Engine mounting**, **Lower engine tie-bar: Removal - Refitting**, page **19D-36**) .

❑ Torque tighten:

- the **half-subframe bolts (105 N.m)**,
- the **half-subframe nuts (21 N.m)**.

❑ Proceed in the reverse order to removal.

❑ Top up the engine oil (see **10A**, **Engine and cylinder block assembly**, **Engine oil: Draining - Refilling**, page **10A-43**) .

❑ Connect the battery (see **Battery: Removal - Refitting**) (80A, Battery).

B84 or C84 or G84 or S84, and K9K

Essential equipment
safety strap(s)

Tightening torques ▽	
sump bolts on the gearbox	**44 N.m**
sump bolts on the cylinder block	**14 N.m**
sump bolts on the multi-function support	**21 N.m**
catalytic converter upstream strut bolts	**21 N.m**
half-subframe bolts	**105 N.m**
half-subframe nuts	**21 N.m**
half-subframe side stiffener bolts	**21 N.m**

REMOVAL

I - REMOVAL PREPARATION OPERATION

❑ Position the vehicle on a two-post lift (see **Vehicle: Towing and lifting**) (02A, Lifting equipment).

❑ Disconnect the battery (see **Battery: Removal - Refitting**) (80A, Battery).

❑ Remove:

- the engine covers,
- the dipstick,
- the engine undertray bolts,
- the engine undertray,
- the front bumper (see **Front bumper: Removal - Refitting**) (55A, Exterior protection),
- the front wheels (see **Wheel: Removal - Refitting**) (35A, Wheels and tyres),
- the front section of the front wheel arch liners (see **Front wheel arch liner: Removal - Refitting**) (55A, Exterior protection).

❑ Drain the engine oil (see **10A**, **Engine and cylinder block assembly**, **Engine oil: Draining - Refilling**, page **10A-43**) .

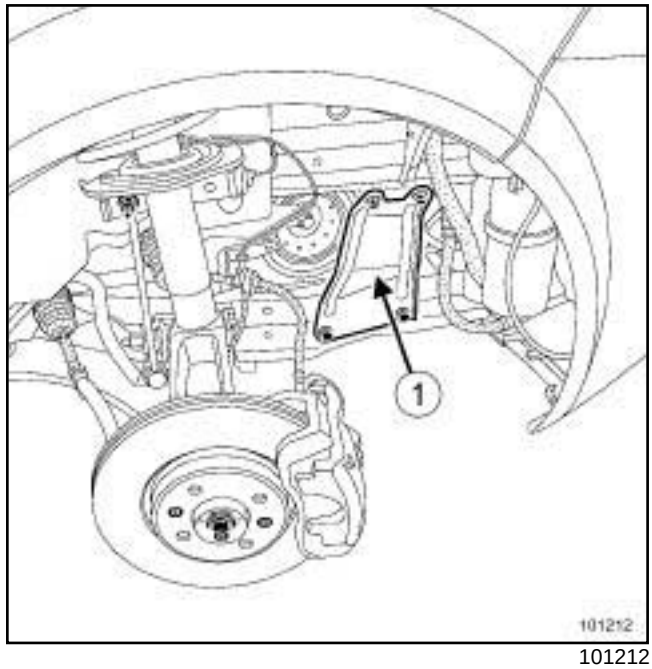

101212

❑ Remove the half-subframe side stiffeners (**1**) .

❑ Fit the cooling assembly to the upper cross member using a **safety strap(s)**.

> Note:
>
> When fitting the **safety strap(s)**, be careful:
>
> - not to crush the cooling hoses,
>
> - not to strap up the half-subframe.

K9K, and 732 or 734

❑ Move the diesel drain pipe away from the injector rail protector.

B84 or C84 or G84 or S84, and K9K

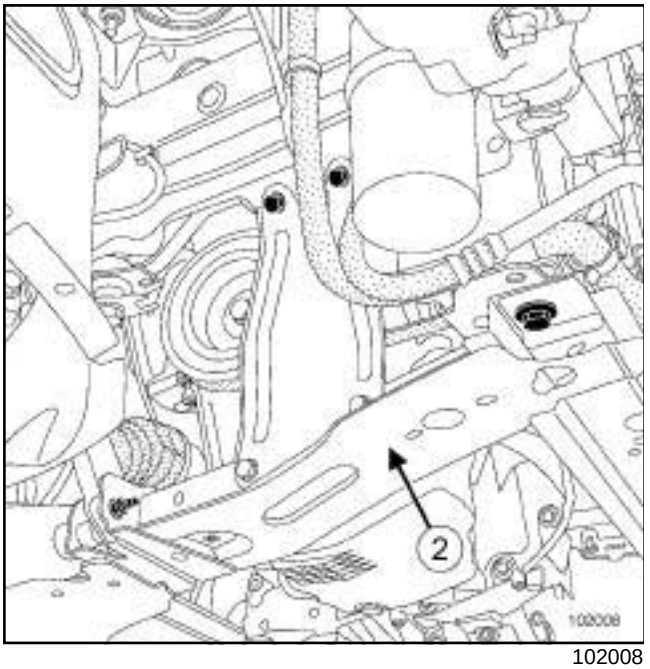

102008

❑ Remove:

- the half-subframe nuts,
- the half-subframe bolts,
- the half-subframe (**2**) .

K9K, and 732 or 734

❑ Remove:

- the lower engine tie-bar (see **19D**, **Engine mounting**, **Lower engine tie-bar: Removal - Refitting**, page **19D-36**) ,
- the lower engine tie-bar support lower mounting bolts.

❑ Loosen the lower engine tie-bar upper bolt.

❑ Remove:

- the right-hand driveshaft flange bolts from the relay bearing,
- the relay bearing bolts from the sump,
- the relay bearing,
- the catalytic converter upstream stay bolts,
- the catalytic converter upstream strut.

❑ Disconnect the oil level sensor (if equipped).

AIR CONDITIONING or CLIMATE CONTROL

❑ Remove the bolt from the sump on the multifunction support.

II - OPERATION FOR REMOVAL OF PART CONCERNED

❑ Remove:

- the sump bolts,
- the sump.

Note:

If the sump cannot be extracted because it is in contact with the oil pump strainer, do not force the removal of the sump as this may damage the oil splash plate.

Loosen the oil pump bolts by a few turns (the tip of your finger should pass between the bolt head and the oil pump casing) using 10 mm and 13 mm open-jawed spanners and while tilting the sump towards the front of the vehicle.

REFITTING

I - REFITTING PREPARATION OPERATION

K9K, and 732 or 734

❑ Clean the strainer with a soft, lint-free cloth.

❑ Clean the joint faces with **SUPER CLEANER FOR JOINT FACES** (see **Vehicle: Parts and consumables for repair**) (04B, Consumables - Products) to dissolve any part of the seal still adhering.

WARNING
The joint faces must be clean, dry and free from grease (avoid finger marks).

WARNING
Excess sealant could be squeezed out when the parts are tightened. A mixture of sealant and fluid could cause damage to certain components (engine, radiator, etc.).

B84 or C84 or G84 or S84, and K9K

❑ Apply the product to the section to be cleaned: wait approximately ten minutes, then remove the residue using a wooden spatula.

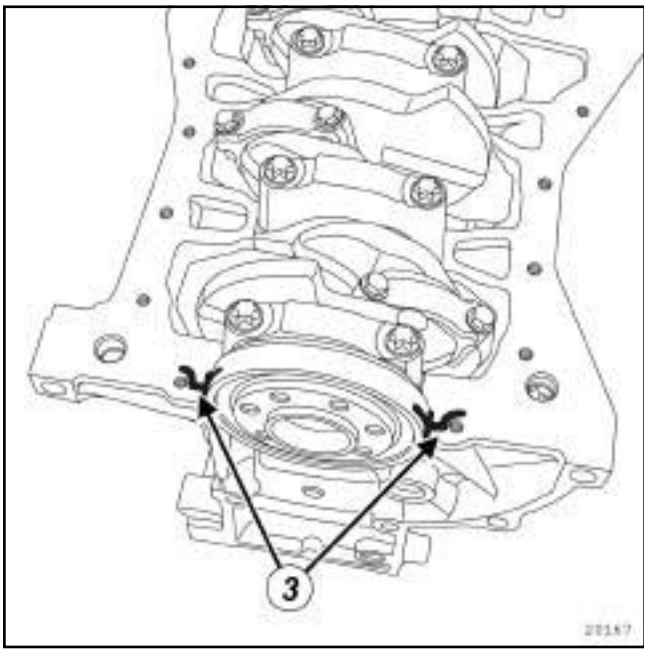

20167

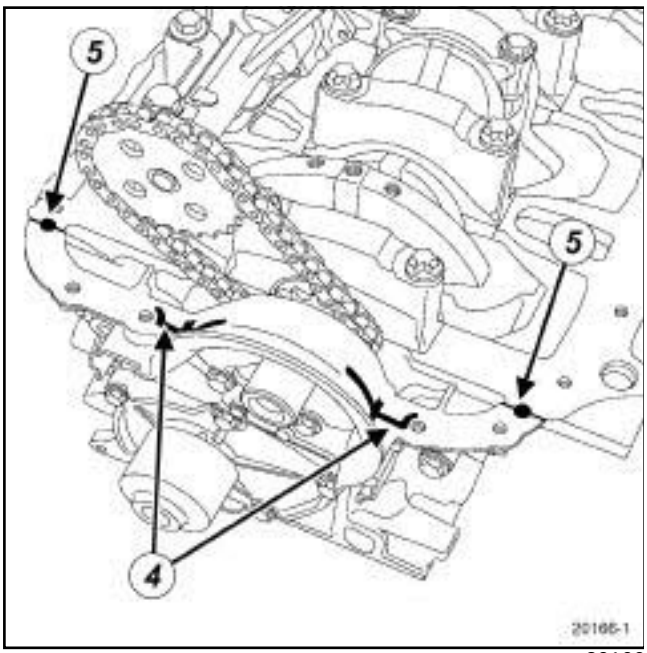

20166

❑ Apply:

- four beads at (**3**) and (**4**) of **ADHESIVE SILICONE SEAL**, with a diameter of **5 mm**.
- two spots of **ADHESIVE SILICONE SEAL** at (**5**) , with a diameter of **7 mm** where the crankshaft and cylinder block closure panels intersect.

II - REFITTING OPERATION FOR PART CONCERNED

1 - FIRST FITTING

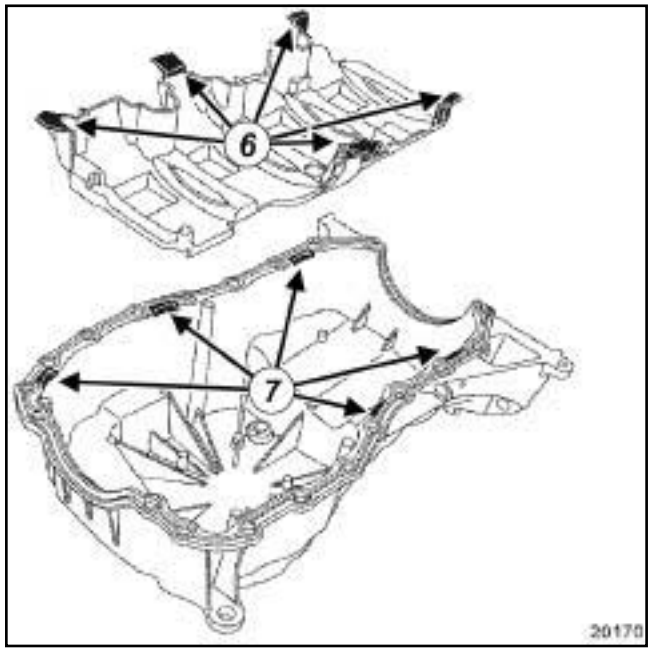

20170

❑ Refit the oil splash plate onto the cylinder block.

Note:

When refitting the sump, check that:

- the oil splash plate tabs (**6**) are positioned correctly in the slots (**7**) ,
- the cylinder block and the sump engine flywheel end are aligned to prevent damage to the clutch housing.

B84 or C84 or G84 or S84, and K9K

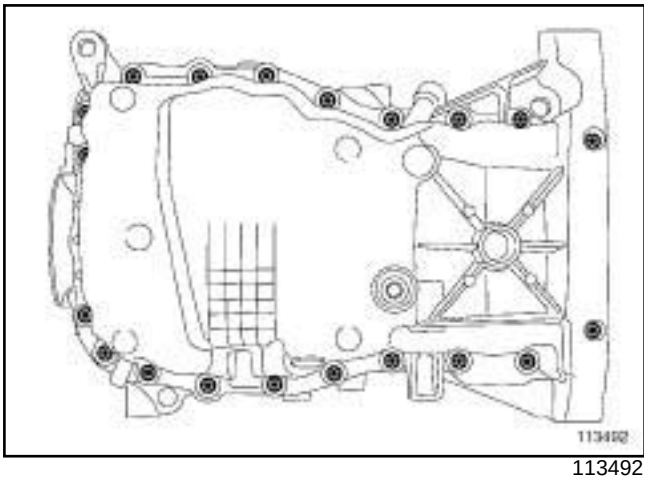

113492

❑ Refit:

- the oil sump mounting seal,
- the engine oil sump,
- the sump bolts to the gearbox, without tightening them,
- the sump bolts to the cylinder block, without tightening them.

❑ Tighten to torque the **sump bolts on the gearbox (44 N.m)**.

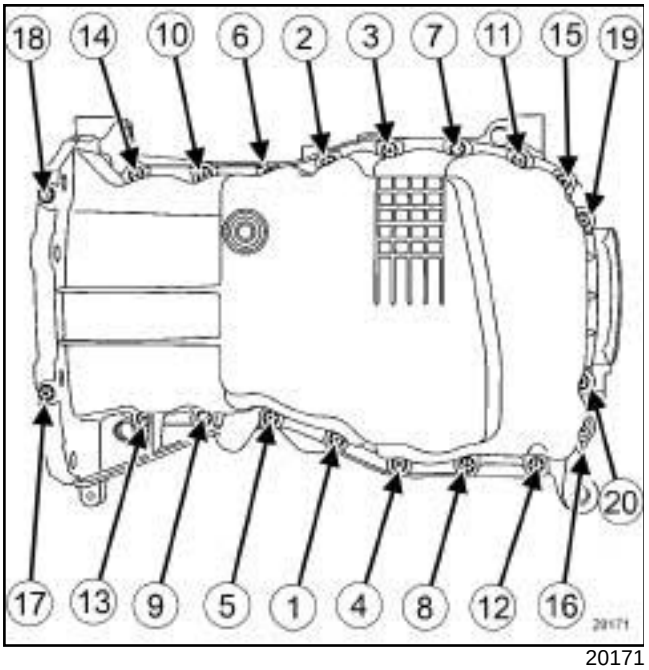

20171

❑ Torque tighten in order the **sump bolts on the cylinder block (14 N.m)**.

B84 or C84 or G84 or S84, and K9K

2 - SECOND FITTING

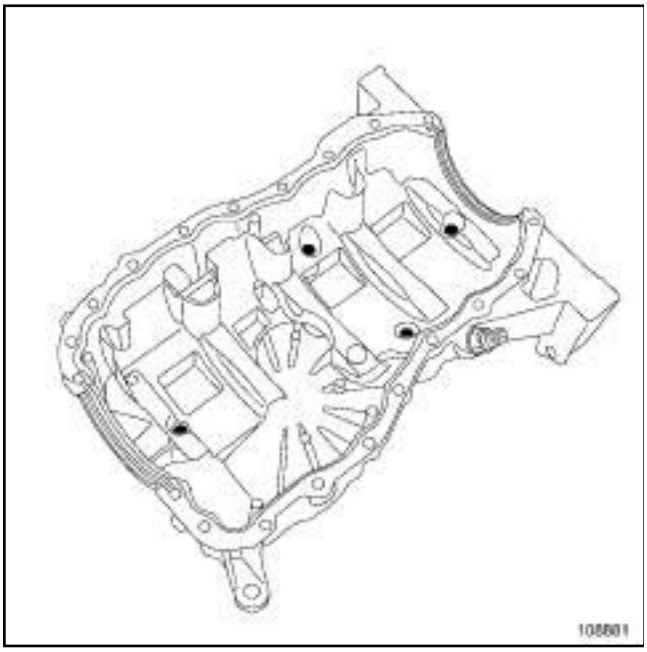

108881

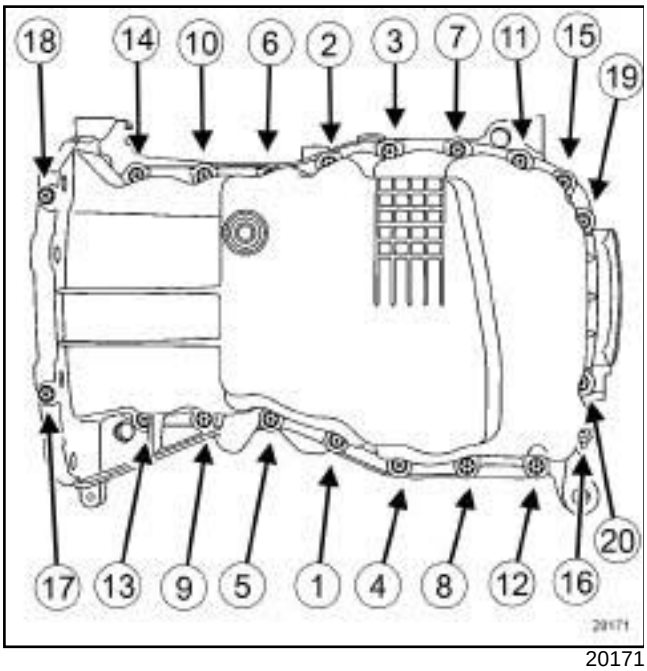

20171

❑ Refit:

- the oil sump mounting seal,
- the engine oil sump,
- the sump bolts to the gearbox, without tightening them,
- the sump bolts to the cylinder block, without tightening them.

Note:

If the oil pump was loosened beforehand in order to extract the sump, position the sump in order to pass the oil pump strainer into the oil splash plate of the sump.

Position a component jack to support the sump.

Tilt the sump towards the front of the vehicle, in order to facilitate access to the oil pump bolts.

Torque tighten the oil pump bolts (**25 N.m**) using the small torque wrench **77 11 226 888**.

Fit the sump and then follow the following instructions.

Note:

Before pressing the sump on the cylinder block, check that the sump seal is still in place and that it has not come out of the grooves on the sides.

❑ Torque tighten the **sump bolts on the gearbox (44 N.m)**.

❑ Torque tighten in order the **sump bolts on the cylinder block (14 N.m)**.

III - FINAL OPERATION

❑ Connect the oil level sensor.

AIR CONDITIONING or CLIMATE CONTROL

❑ Refit the sump bolt on the multifunction support.

❑ Tighten to torque the **sump bolts on the multifunction support (21 N.m)**.

❑ Refit the catalytic converter upstream stay.

❑ Tighten the bolts of the catalytic converter upstream strut until contact is made.

❑ Torque tighten the **catalytic converter upstream strut bolts (21 N.m)**.

❑ Refit:

- the relay bearing,
- the relay bearing bolts from the sump,
- the bolts of the right-hand driveshaft bracket on the relay bearing.

B84 or C84 or G84 or S84, and K9K

K9K, and 732 or 734

❏ Refit the lower engine tie-bar support lower bolts.

❏ Torque tighten the lower engine tie-bar support lower bolts (see **19D**, **Engine mounting**, **Suspended engine mounting**, page **19D-1**) .

❏ Refit the lower engine tie-bar (see **19D**, **Engine mounting**, **Lower engine tie-bar: Removal - Refitting**, page **19D-36**) .

❏

Note:

Apply a drop of **HIGH STRENGTH THREAD LOCK** (see **Vehicle: Parts and consumables for repair**) (04B, Consumables - Products) on the bolts of the half-subframe.

❏ Refit:

- the half-subframe bolts,
- the half-subframe nuts,
- the half-subframe.

❏ Torque tighten:

- the **half-subframe bolts (105 N.m)**,
- the **half-subframe nuts (21 N.m)**.

K9K, and 732 or 734

❏ Fit the diesel drain pipe on the injector rail protector.

❏ Remove the **safety strap(s)**.

❏ Refit:

- the half-subframe side stiffeners,
- the half-subframe side stiffener bolts.

❏ Torque tighten the **half-subframe side stiffener bolts (21 N.m)**.

❏ Refit:

- the front bumper (see **Front bumper: Removal - Refitting**) (55A, Exterior protection),
- the engine undertray,
- the front section of the front wheel arch liners (see **Front wheel arch liner: Removal - Refitting**) (55A, Exterior protection),
- the front wheels (see **Wheel: Removal - Refitting**) (35A, Wheels and tyres).

❏ Connect the battery (see **Battery : Removal - Refitting**) (80A, Battery).

❏ Fill up the engine oil (see **10A**, **Engine and cylinder block assembly**, **Engine oil: Draining - Refilling**, page **10A-43**) .

❏ Refit:

- the dipstick,
- the engine covers.

B84 or C84 or G84 or S84, and F4R, and 770 or 771 or 776

Essential equipment
safety strap(s)

Tightening torques ▽	
half-subframe mounting bolts	**105 Nm**
half-subframe mounting nuts	**21 Nm**
wheel bolts (F4R 776)	**130 Nm**
wheel bolts	**110 Nm**
battery cover bolts	**4 Nm**

REMOVAL

❑ Position the vehicle on a two-post lift (see **Vehicle: Towing and lifting**) (MR 364, 02A, Lifting equipment).

❑ Disconnect the battery (see **Battery: Removal - Refitting**) (MR 364, 80A, Battery).

❑ Remove the engine undertray.

❑ Drain the engine oil (see **10A**, **Engine and cylinder block assembly**, **Engine oil: Draining - Refilling**, page **10A-43**) .

❑ Remove:

- the engine covers,
- the dipstick,
- the front wheels,
- the wheel arch liners.

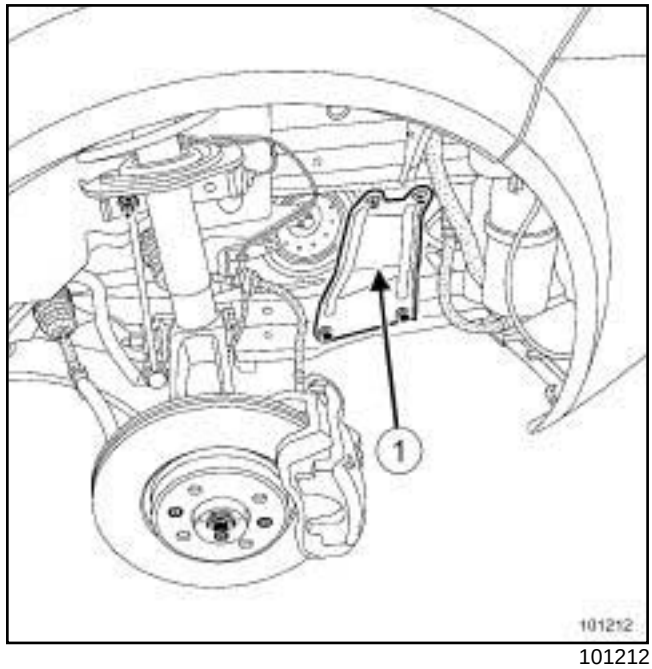

101212

❑ Remove:

- the half sub-frame side reinforcement mounting bolts,
- the side reinforcements (**1**) .

❑ Attach the cooling assembly to the upper cross member using the **safety strap(s)**.

Note:

When fitting the **safety strap(s)**, be careful:

- not to crush the cooling hoses,
- not to strap up the half-subframe.

B84 or C84 or G84 or S84, and F4R, and 770 or 771 or 776

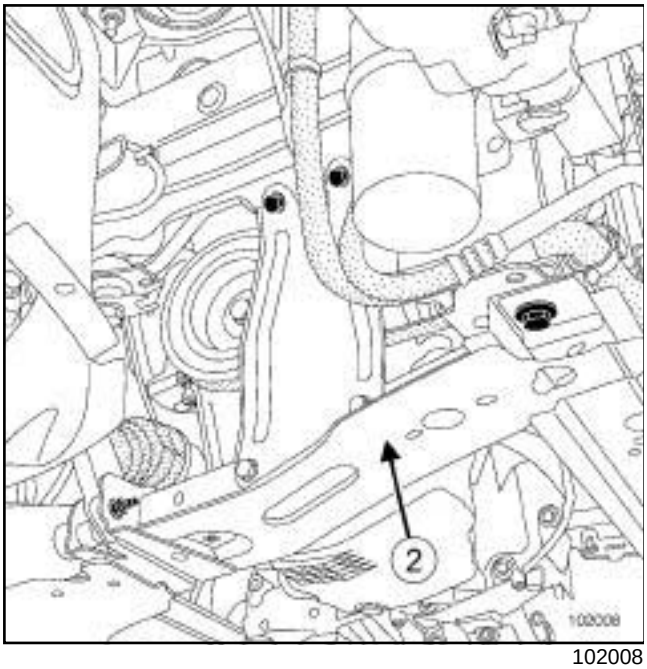

102008

- Remove:
  - the mounting nuts from the half-subframe,
  - the half-subframe mounting bolts,
  - the half sub-frame (**2**) .
- Remove:
  - the engine tie-bar,
  - the sump mountings,
  - the sump.

REFITTING

- Clean the gasket faces with **DECAPJOINT** to dissolve off any part of the gasket still attached.
- Apply the product to the section to be cleaned: wait approximately ten minutes, then remove the residue using a wooden spatula.

WARNING
The joint faces must be clean, dry and free from grease (avoid finger marks).

WARNING
Excess sealant could be squeezed out when the parts are tightened. A mixture of sealant and fluid could cause damage to certain components (engine, radiator, etc.).

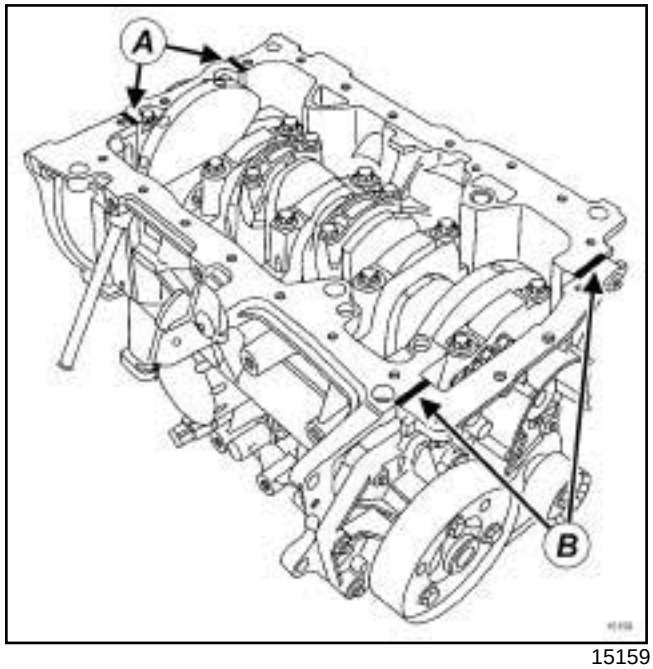

15159

- Apply a bead of **SILICONE ADHESIVE SEALANT** at (**A**) , on the joint between the crankshaft closure panel and the cylinder block.

Note:
Do not cut the two tabs on the crankshaft closure panel seal, which sit higher than the joint face of the cylinder block ***(B)*** .

- Refit the sump with a new seal.

B84 or C84 or G84 or S84, and F4R, and 770 or 771 or 776

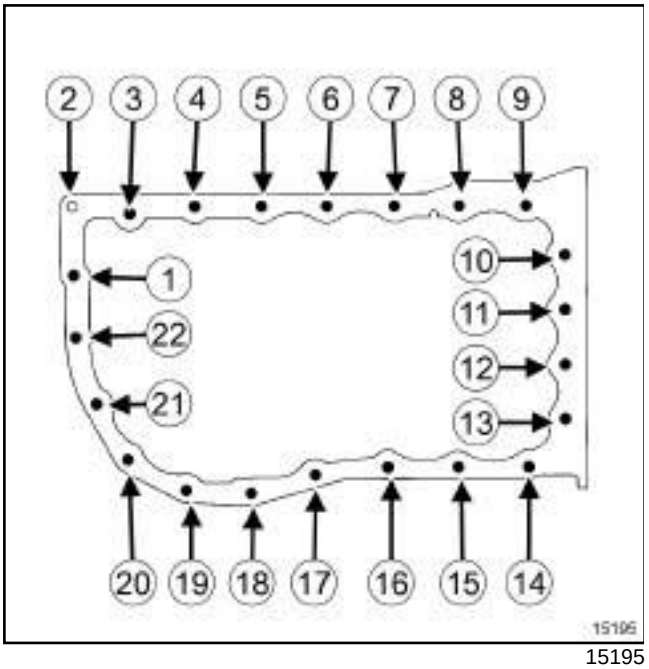

15195

❑ Stage 1:

• Tighten to torque and in order, bolts (**8**) , (**15**) , (**4**) , (**19**) , (**11**) , (**12**) (**18 Nm**).

- Stage 2:

• Tighten to torque and in order bolts (**10**) , (**13**) , (**9**) , (**14**) , (**8**) , (**15**) , (**7**) , (**16**) , (**6**) , (**17**) , (**5**) , (**18**) , (**3**) , (**20**) , (**2**) , (**21**) , (**1**) and (**22**) (**15 Nm**).

❑ Refit the lower engine tie-bar (see **19D**, **Engine mounting**, **Lower engine tie-bar: Removal - Refitting**, page **19D-36**) .

❑ Torque tighten:

- the **half-subframe mounting bolts (105 Nm)**,

- the **half-subframe mounting nuts (21 Nm)**,

- the **wheel bolts (F4R 776) (130 Nm)**,

- the **wheel bolts (110 Nm)**,

- the **battery cover bolts (4 Nm)**.

❑ Proceed in the reverse order to removal.

❑ Top up the engine oil (see **10A**, **Engine and cylinder block assembly**, **Engine oil: Draining - Refilling**, page **10A-43**) .

❑ Connect the battery (see **Battery : Removal - Refitting**) (MR 364, 80A, Battery).

B84 or C84, and F4R, and 774

Tightening torques ▽	
sump mounting bolts 8, 15, 4, 19, 11, 12	**18 Nm**
sump mounting bolts 10, 13, 9, 14, 8, 15, 7, 16, 17, 5, 18, 3, 20, 2, 21,1 22	**15 Nm**
radiator cross member front mounting bolts	**105 Nm**
radiator cross member rear mounting bolts	**210 Nm**
engine tie-bar on the subframe	**105 Nm**
engine tie-bar on the engine	**180 Nm**

REMOVAL

❑ Position the vehicle on a two-post lift (see **Vehicle: Towing and lifting**) (MR 364, 02A, Lifting equipment).

> **IMPORTANT**
> During this operation, secure the vehicle on the lift with a strap to prevent it from unbalancing.

❑ Disconnect the battery (see **Battery: Removal - Refitting**) (MR 364, 80A, Battery).

❑ Drain the engine (see **10A**, **Engine and cylinder block assembly**, **Engine oil: Draining - Refilling**, page **10A-43**) .

❑ Remove:

- the engine undertray,
- the front wheels,
- the wheel arch liners.

❑ Attach the cooling assembly to the upper cross member.

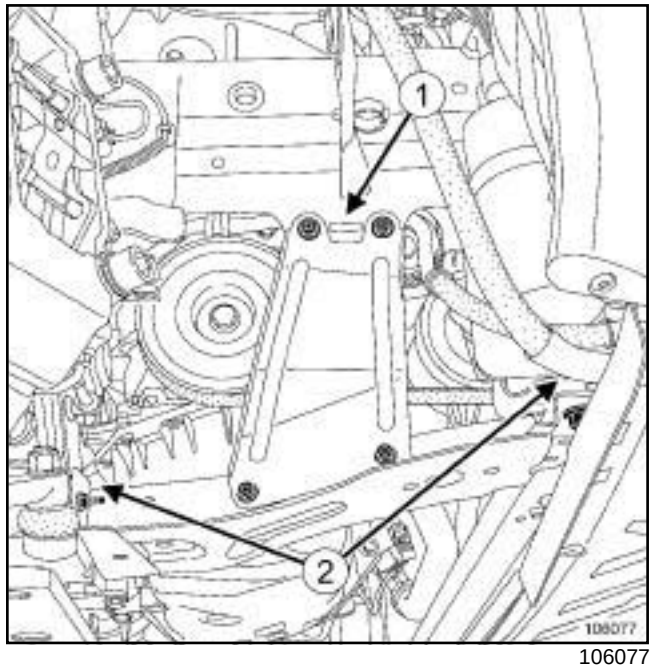

106077

❑ Remove:

- the left and right-hand side reinforcement mountings (**1**) ,
- the radiator cross member mountings (**2**) ,
- the engine tie-bar,
- the sump mountings,
- the sump.

REFITTING

❑

> Note:
> Applying excess sealant could cause it to be squeezed out when parts are tightened. The product-fluid mix may cause damage to some components (engine, radiator, etc.).

B84 or C84, and F4R, and 774

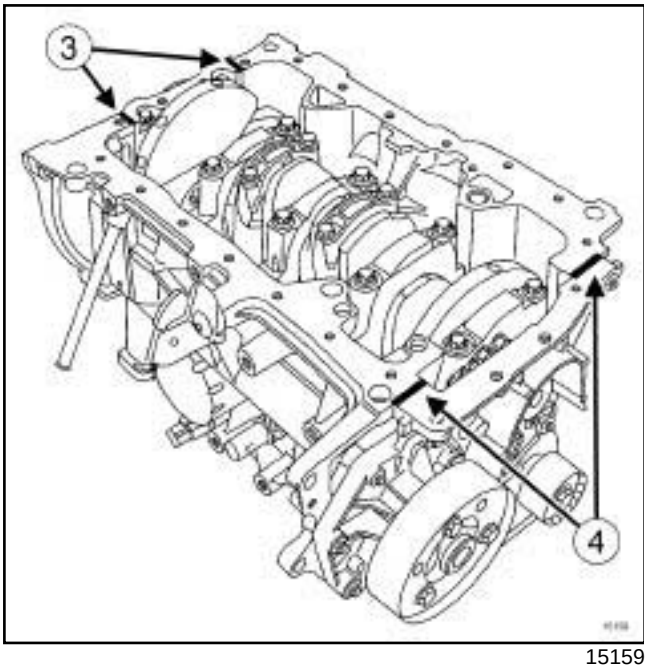

15159

❑ Apply a bead of **RHODORSEAL 5661** at (**3**) (on each side of bearing no.1) and at (**4**) (on the connection between the crankshaft closure panel and the cylinder block).

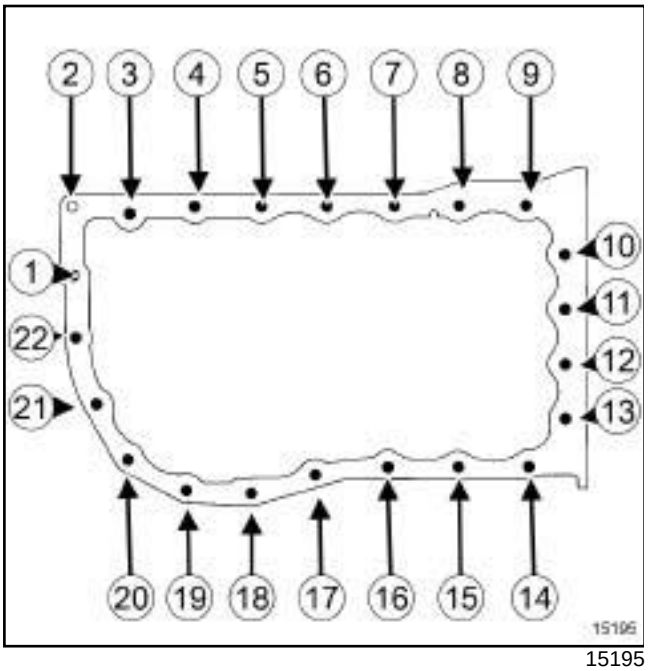

15195

❑ Refit the sump with a new seal.

❑ Torque tighten and in order:

- the **sump mounting bolts 8, 15, 4, 19, 11, 12 (18 Nm)**,
- the **sump mounting bolts 10, 13, 9, 14, 8, 15, 7, 16, 17, 5, 18, 3, 20, 2, 21,1 22 (15 Nm)**.

❑ Torque tighten:

- the **radiator cross member front mounting bolts (105 Nm)**,
- the **radiator cross member rear mounting bolts (210 Nm)**,
- the **engine tie-bar on the subframe (105 Nm)**,
- the **engine tie-bar on the engine (180 Nm)**.

❑ Proceed in the reverse order to removal.

❑ Top up the engine oil (see **10A**, **Engine and cylinder block assembly**, **Engine oil: Draining - Refilling**, page **10A-43**) .

❑ Connect the battery (see **Battery : Removal - Refitting**) (MR 364, 80A, Battery).

B84 or C84 or G84 or S84, and M9R

Essential special tooling	
Mot. 1716	Removes housing with silicone seals.

Essential equipment
safety strap(s)

Tightening torques ▽	
sump bolts	**16 N.m**
half-subframe bolts	**105 N.m**
half-subframe nuts	**21 N.m**
the side stiffener lower bolts	**21 N.m**
dipstick guide tube bolt	**10 N.m**

REMOVAL

I -

II - REMOVAL PREPARATION OPERATION

❑ Position the vehicle on a lift (see **Underbody lift**) (MR 364, 02A, Lifting equipment).

❑ Disconnect the battery (see **Battery: Removal - Refitting**) (MR 364, 80A, Battery).

❑ Remove the engine protectors.

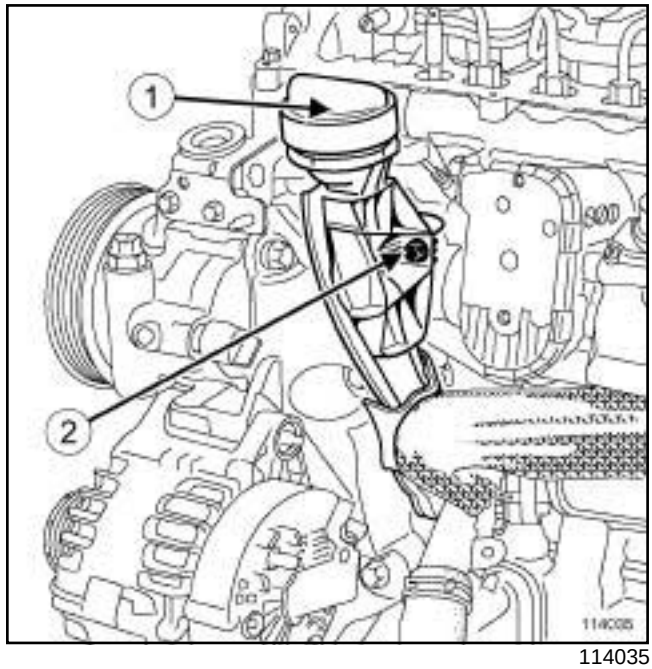

114035

❑ Remove:

- the oil filler cap - dipstick assembly (**1**) ,
- the dipstick guide tube bolt (**2**) ,
- the dipstick guide tube.
- the front wheels (see **Wheel: Removal - Refitting**) (MR 364, 35A, Wheels and tyres),
- the front wheel arch liners (see **Front wheel arch liner: Removal - Refitting**) (MR 365, 55A, Exterior protection),
- the engine undertray,
- the front bumper (see **Front bumper: Removal - Refitting**) (MR 365, 55A, Exterior protection).

B84 or C84 or G84 or S84, and M9R

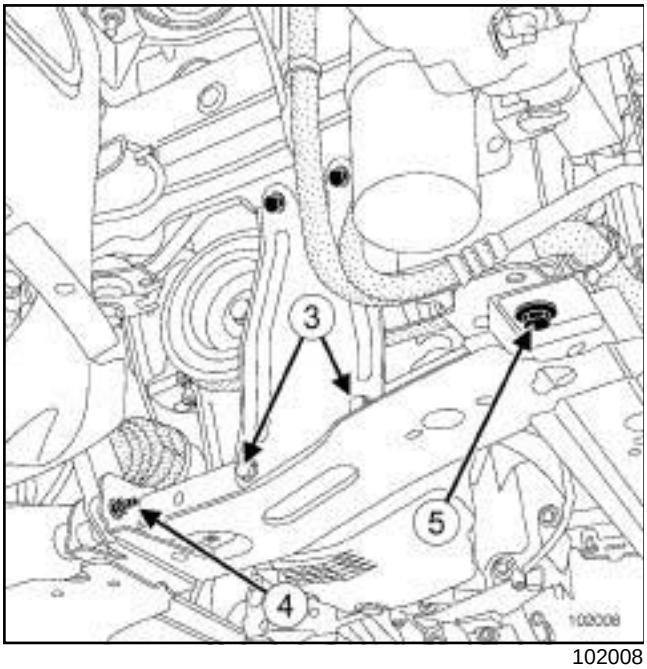

102008

❑ Fit the cooling assembly to the upper cross member using a **safety strap(s)**.

> Note:
>
> When fitting the **safety strap(s)**, be careful:
>
> - not to crush the cooling hoses,
> - deform the air conditioning pipes,
> - not to strap up the half-subframe.

❑ Remove:

- the side stiffener lower bolts (**3**) ,
- the half subframe nuts (**4**) ,
- the bolts (**5**) from the half subframe.

❑ Drain the engine oil (see **10A**, **Engine and cylinder block assembly**, **Engine oil: Draining - Refilling**, page **10A-43**) .

III - OPERATION FOR REMOVAL OF PART CONCERNED

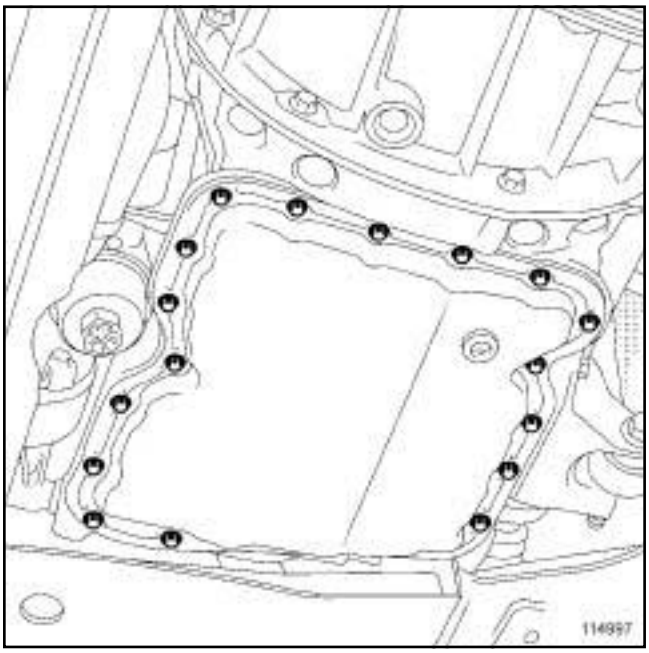
114997

❑ Remove the sump bolts.

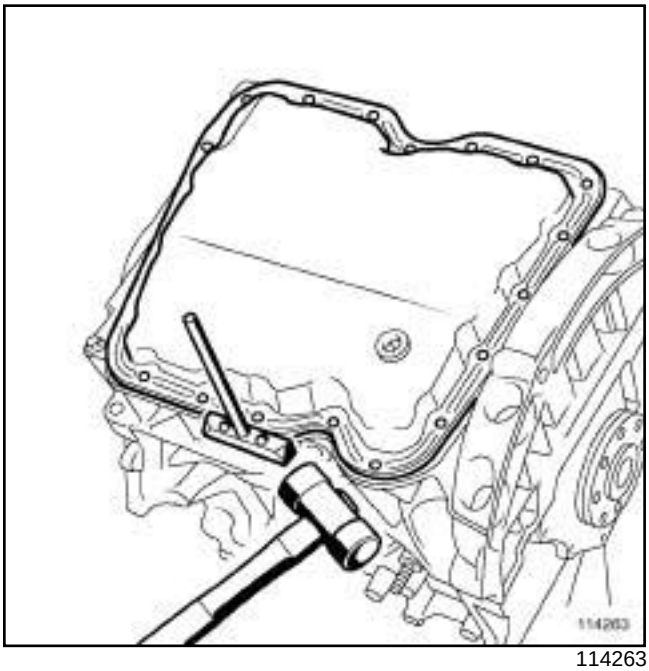
114263

❑ Cut the sump's silicone seal (except on side of the coupling face and the rear suspended mounting support) using the **(Mot. 1716)**.

B84 or C84 or G84 or S84, and M9R

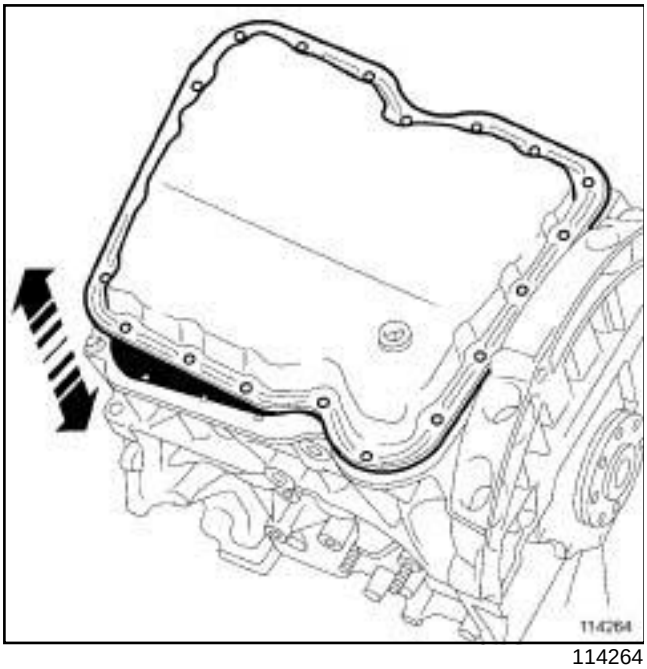

114264

❑ Gradually detach the sump.

Note:

To prevent deformation, use a series of small movements.

❑ Remove the sump.

REFITTING

I - REFITTING PREPARATIONS OPERATION

❑ Check that the sump is not:

- scratched,
- deformed.

If this is the case, replace the sump.

❑ Check that the base plate is not scratched.

IMPORTANT

- Do not scratch the aluminium sealing surfaces.
- Wear goggles.
- Wear gloves during the operation.

WARNING

Applying excess sealant could cause it to be squeezed out when parts are tightened. The product mix may damage some components (engine, radiator, etc.).

WARNING

The sealing surfaces must be clean, dry and free from grease (avoid finger marks).

II - REFITTING OPERATION FOR PART CONCERNED

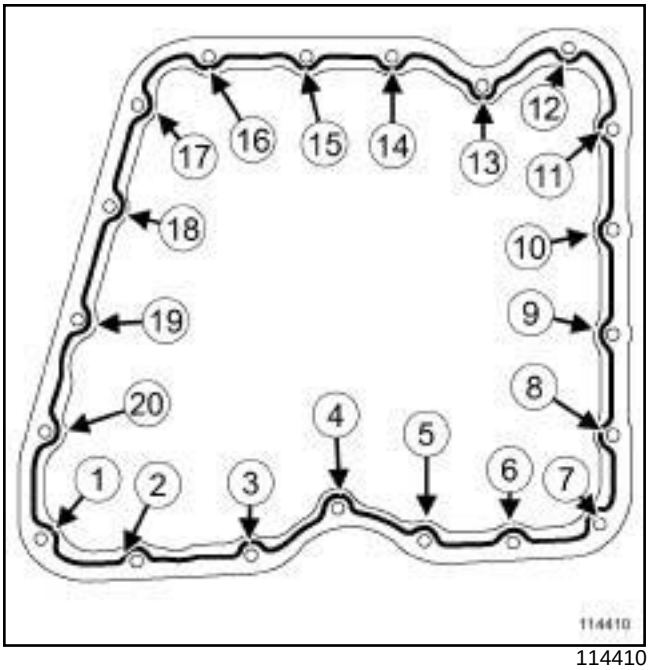

114410

❑ Apply a bead of **SILICONE ADHESIVE SEAL** of a diameter of **5 mm ± 2** to the sump to ensure a seal.

❑ Fit the sump.

❑ Tighten the sump bolts until contact is made.

❑ Tighten to torque and in order the **sump bolts (16 N.m)**.

B84 or C84 or G84 or S84, and M9R

III - FINAL OPERATION

- ❑ Apply some **FREIN DE VIS HAUTE RESISTANCE** to the half-subframe bolts.
- ❑ Refit:
  - the half-subframe,
  - the half-subframe bolts,
  - the half-subframe nuts.
- ❑ Torque tighten:
  - the **half-subframe bolts (105 N.m)**,
  - the **half-subframe nuts (21 N.m)**.
- ❑ Refit the side reinforcement lower bolts.
- ❑ Torque tighten **the side stiffener lower bolts (21 N.m)**.
- ❑ Remove the **safety strap(s)**.
- ❑ Refit:
  - the front bumper (see **Front bumper: Removal - Refitting**) (MR 365, 55A, Exterior protection),
  - the engine undertray,
  - the front wheel arch liners (see **Front wheel arch liner: Removal - Refitting**) (MR 364, 55A, exterior protection),
  - the front wheels (see **Wheel: Removal - Refitting**) (MR 364, 35A, Wheels and tyres).
- ❑ Connect the battery (see **Battery : Removal - Refitting**) (MR 364, 80A, Battery).
- ❑ Top up the engine oil (see **10A**, **Engine and cylinder block assembly**, **Engine oil: Draining - Refilling**, page **10A-43**) .
- ❑ Fit a new seal in the dipstick guide tube housing.
- ❑ Lubricate the seal with engine oil.
- ❑ Fit the dipstick guide tube into the cylinder block.

> Note:
>
> Check that the seal has not come out of its housing.

- ❑ Torque tighten the **dipstick guide tube bolt (10 N.m)**.
- ❑ Refit:
  - the "filler cap - dipstick" assembly,
  - the engine protectors.

F9Q

Essential special tooling	
Mot. 1914	Tool for fitting G9 con rod bearing shells
Mot. 1920	Tool for fitting F9 / K9 con rod bearing shells

Essential equipment
indelible pencil
diagnostic tool

Tightening torques ▽	
con rod cap bolts	**25 N.m + 110° ± 10°**

IMPORTANT
To avoid all risk of damage to the systems, apply the safety and cleanliness instructions and operation recommendations before carrying out any repair (see **Vehicle: Precautions for repair**) .

IMPORTANT
Wear leaktight gloves (Nitrile type) for this operation.

REMOVING - REFITTING

I - REMOVAL PREPARATION OPERATION

- ❑ Position the vehicle on a two-post lift (see **Vehicle: Towing and lifting**) (02A, Lifting equipment).
- ❑ Remove the engine undertray.
- ❑ Drain the oil from the engine (see **10A**, **Engine and cylinder block assembly**, **Engine oil: Draining - Refilling**, page **10A-43**) .
- ❑ Remove the oil filter (see **10A**, **Engine and cylinder block assembly**, **Oil filter: Removal - Refitting**, page **10A-53**) .
- ❑ Remove the lower engine tie-bar (see **19D**, **Engine mounting**, **Lower engine tie-bar: Removal - Refitting**, page **19D-36**) .
- ❑ Remove the sump (see **10A**, **Engine and cylinder block assembly**, **Sump: Removal - Refitting**, page **10A-6**) .
- ❑ Remove the oil pump (see **10A**, **Engine and cylinder block assembly**, **Oil pump: Removal - Refitting**, page **10A-80**) .

II - REMOVAL OPERATION FOR THE CON ROD BEARING SHELLS NO.2

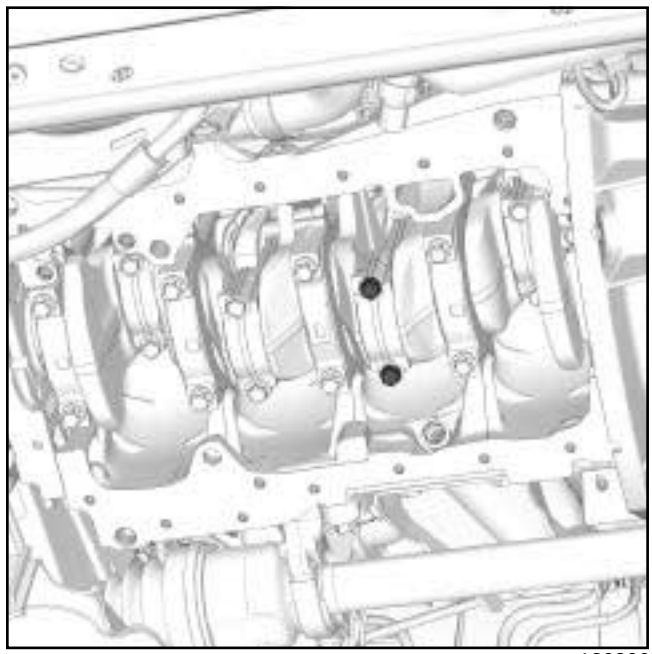

139306

- ❑ Use **SURFACE CLEANER** (see **Vehicle: Parts and ingredients for the repairwork**) (04B, Consumables - Products) to clean the big ends.
- ❑ Mark the position of the con rod cap in relation to the con rod body using a **indelible pencil**.

F9Q

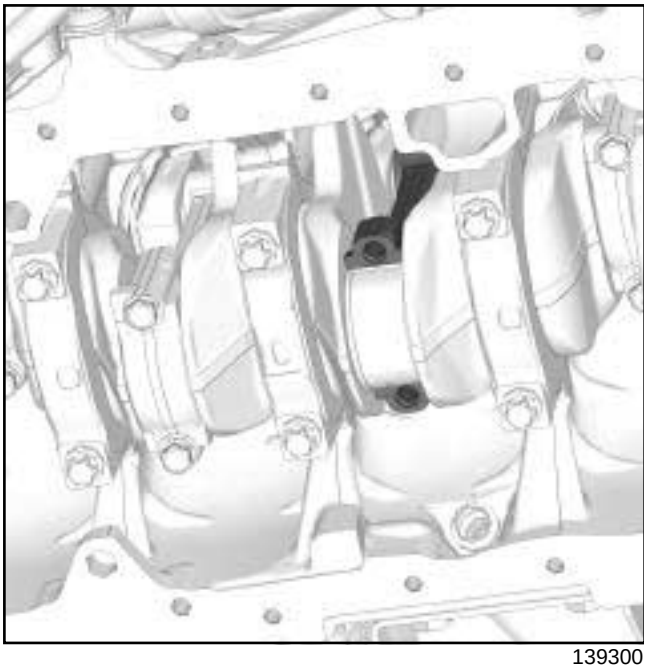

139300

❑ Remove:

- the con rod bolts,
- the con rod cap,
- the lower con rod bearing shell.

> Note:
>
> If reusing the con rod bearing shells, mark the position of the lower con rod bearing shell in relation to the con rod cap.

❑ Use **SURFACE CLEANER** (see **Vehicle: Parts and ingredients for the repairwork**) (04B, Consumables - products) to clean the bearing mating face on the con rod cap.

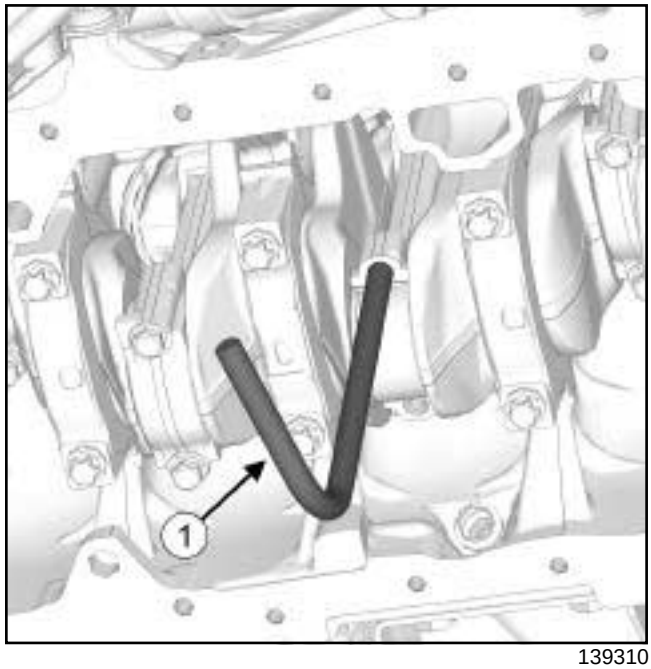

139310

❑ Fit the tie rod of the tool **(Mot. 1914)** (**1**) on the con rod body.

❑ Push the con rod upwards to release the con rod from the crankpin.

❑ Turn the crankshaft **90°** clockwise (timing end).

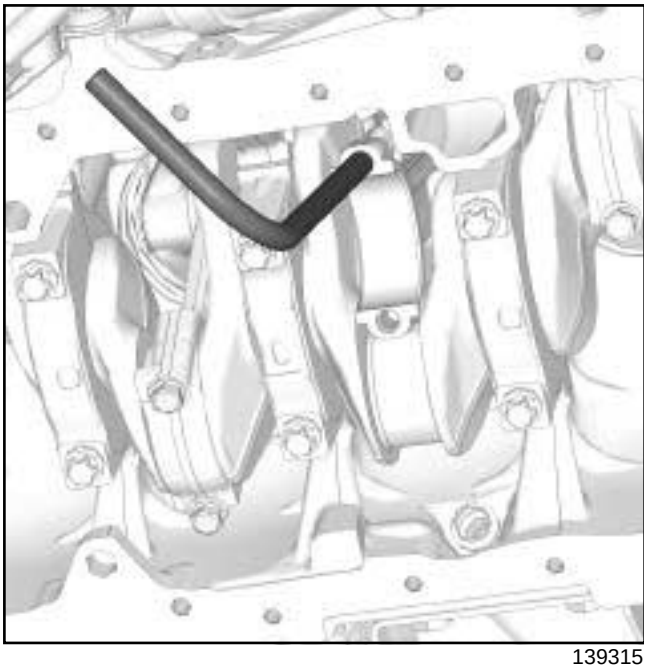

139315

❑

WARNING

Failure to observe the following procedure may damage the piston base cooling jets.

Pull the con rod - piston assembly using the tie rod of the tool **(Mot. 1914)**, taking care not to allow the piston to touch the piston base cooling jets.

❑ Remove the upper con rod bearing shell.

Note:

If reusing the con rod bearing shells, mark the position of the upper con rod bearing shell in relation to the con rod body.

❑ Use **SURFACE CLEANER** (see **Vehicle: Parts and ingredients for the repairwork**) (04B, Consumables - products) to clean the bearing mating face on the con rod body.

REFITTING

I - REFITTING OPERATION FOR THE CON ROD BEARING SHELLS ON CYLINDER NO.2

❑ **parts always to be replaced: con rod cap bolts (10,03,02,10)**

F9Q

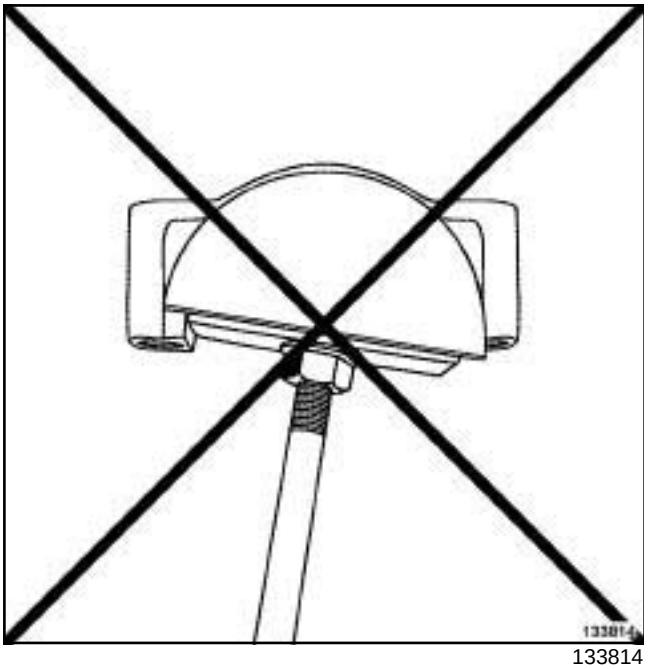

133814

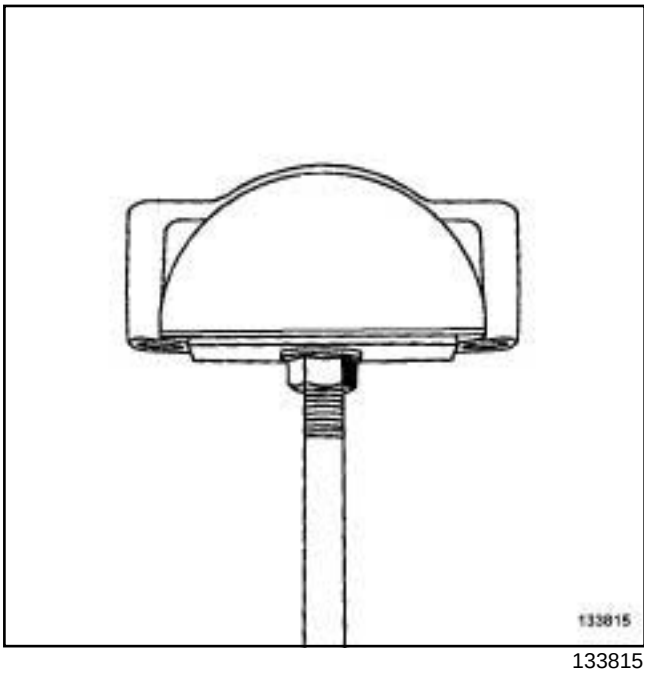

133815

- Screw the head of the tool **(Mot. 1920)** for F9Q engines onto the sleeve of the tool **(Mot. 1914)**.
- Position the lower con rod bearing shell on the tool **(Mot. 1920)**.
-

> Note:
>
> The contact surface between the bearing shell and the con rod must be dry and free of grease.

Fit the lower con rod bearing shell on the con rod cap using the tool **(Mot. 1920)**.

- Position the lower con rod bearing shell so that the ends do not protrude beyond the con rod cap.
- Lubricate the surface of the con rod bearing shell (crankshaft end) using new engine oil.

F9Q

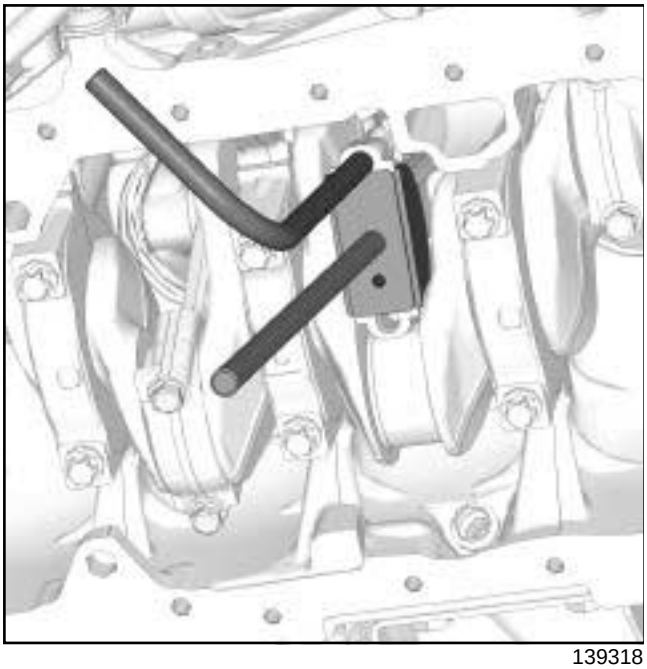

139318

- ❑ Position the upper con rod bearing shell on the tool **(Mot. 1920)**.
- ❑ Fit the upper con rod bearing shell on the con rod body using the tool **(Mot. 1920)**.
- ❑ Position the lower con rod bearing shell so that the end do not protrude beyond the con rod body.
- ❑ Lubricate the surface of the con rod bearing shell (crankshaft end) using new engine oil.
- ❑ Push the con rod - piston assembly back up into place.
- ❑ Turn the crankshaft **90°** anticlockwise.
- ❑ Lubricate the crankpin with new engine oil.
- ❑ Pull the con rod - piston assembly to position the con rod on the crankshaft.
- ❑

> Note:
>
> Before refitting the con rod cap, ensure that there are no impurities (filings, cloth lint, etc.) on the con rod body or cap surfaces.

Refit:

- the con rod cap according to the mark made during removal,
- the new con rod bolts.

- ❑ Torque and angle tighten the **con rod cap bolts (25 N.m + 110° ± 10°)**.

II - REMOVAL - REFITTING OPERATIONS FOR THE CON ROD BEARING SHELLS ON CYLINDERS NO.3, 1 AND 4

- ❑ Perform the same removal - refitting operations as for the con rod bearing shells on cylinder no. 2.

> Note:
>
> For removing and refitting the con rod bearing shells on cylinders no. 1 and no. 4, position the pistons at Bottom Dead Centre before performing the same removal and refitting operations as for the con rod bearing shells on cylinder no. 2.

III - FINAL OPERATION

- ❑ **parts always to be replaced: engine oil sump seal (10,03,01,09)**

  parts always to be replaced: Oil filter (10,05,05, 03)

  parts always to be replaced: Engine oil sump drain plug seal (10,03,01,04)

- ❑ Refit the oil pump (see **10A**, **Engine and cylinder block assembly**, **Oil pump: Removal - Refitting**, page **10A-80**) .
- ❑ Refit the engine oil sump (see **10A**, **Engine and cylinder block assembly**, **Sump: Removal - Refitting**, page **10A-6**) .
- ❑ Refit the lower engine tie-bar (see **19D**, **Engine mounting**, **Lower engine tie-bar: Removal - Refitting**, page **19D-36**) .
- ❑ Refit the oil filter (see **10A**, **Engine and cylinder block assembly**, **Oil filter: Removal - Refitting**, page **10A-53**) .
- ❑ Disconnect the crankshaft position sensor to prevent the engine from starting.
- ❑ Fill up the engine oil (see **10A**, **Engine and cylinder block assembly**, **Engine oil: Draining - Refilling**, page **10A-43**) .
- ❑ Start the engine using the starter until the engine oil warning light goes out.
- ❑ Connect the crankshaft position sensor.
- ❑ Refit the engine undertray.
- ❑ Clear the present faults using the **diagnostic tool**.

K9K

Essential special tooling	
Mot. 1914	Tool for fitting G9 con rod bearing shells
Mot. 1920	Tool for fitting F9 / K9 con rod bearing shells

Essential equipment
safety strap(s)
component jack
indelible pencil
torque wrench
diagnostic tool

Tightening torques ▽	
con rod cap bolts	**20 N.m + 45° ± 6°**
oil pump bolts	**25 N.m**

IMPORTANT
To avoid all risk of damage to the systems, apply the safety and cleanliness instructions and operation recommendations before carrying out any repair (see **Vehicle: Precautions for repair**) .

IMPORTANT
Wear leaktight gloves (Nitrile type) for this operation.

REMOVAL

I - REMOVAL PREPARATION OPERATION

❑ Position the vehicle on a two-post lift (see **Vehicle: Towing and lifting**) (02A, Lifting equipment).

❑ Remove the engine undertray.

❑ Drain the oil from the engine (see **10A**, **Engine and cylinder block assembly**, **Engine oil: Draining - Refilling**, page **10A-43**) .

❑ Remove the oil filter (see **10A**, **Engine and cylinder block assembly**, **Oil filter: Removal - Refitting**, page **10A-53**) .

❑ Remove the lower engine tie-bar (see **19D**, **Engine mounting**, **Lower engine tie-bar: Removal - Refitting**, page **19D-36**) .

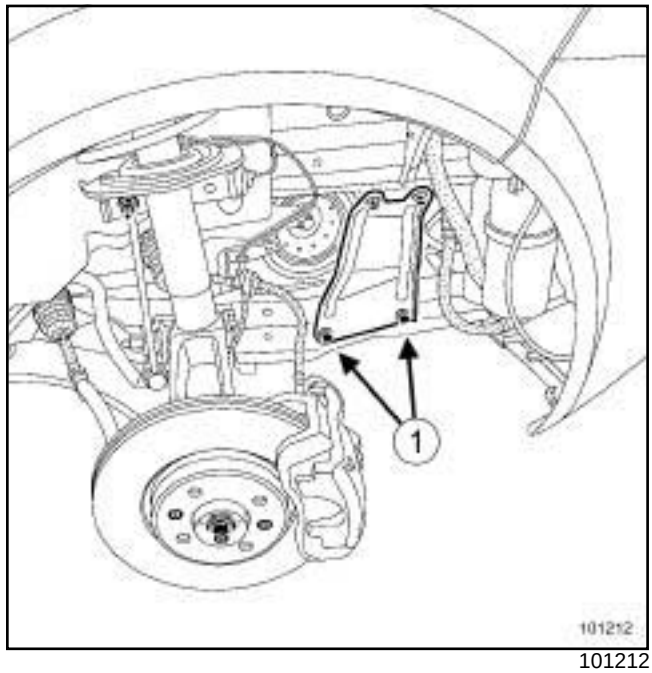

101212

❑ Strap the radiator to the vehicle using **safety strap(s)**.

❑ Remove the clips from the front wheel arch liners on the radiator mounting cross member.

❑ Remove the side reinforcement mountings on the radiator mounting cross member (**1**) .

❑ Remove the radiator mounting cross member without removing the front bumper (see **Radiator support cross member: Removal - Refitting**) (31A, Front axle components).

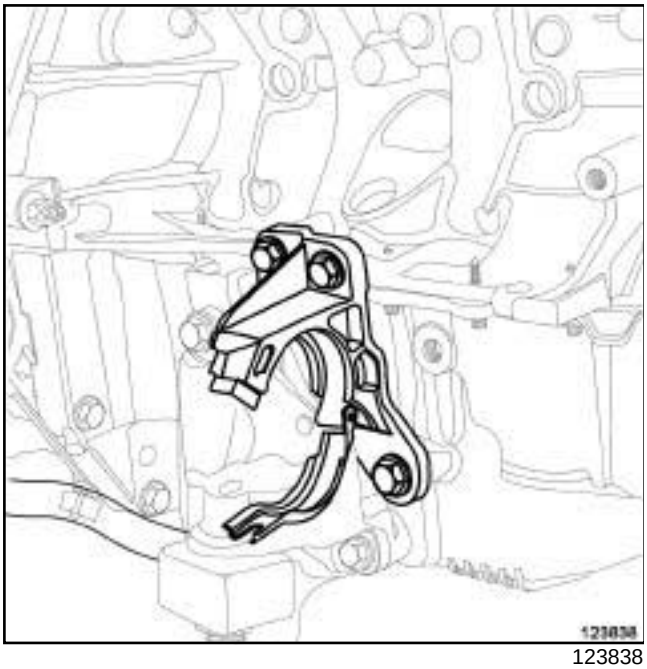
123838

❑ Remove the relay bearing of the front right-hand wheel driveshaft.

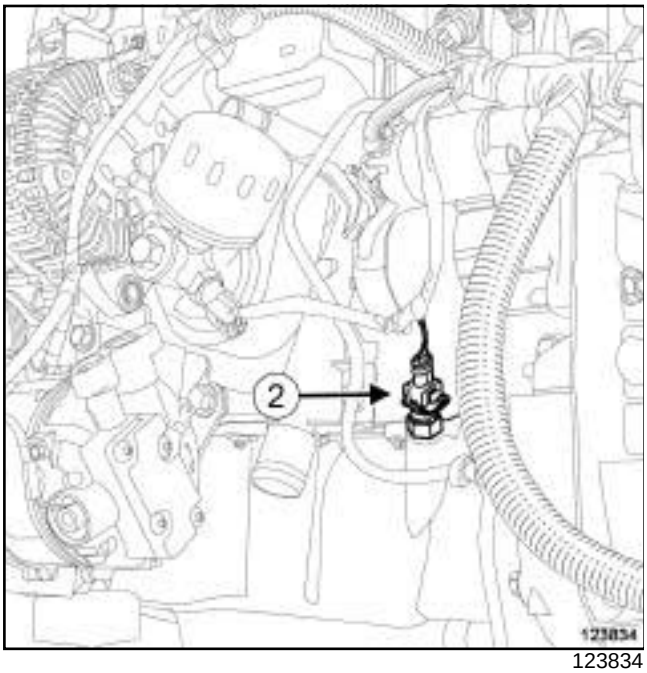

123834

❑ Disconnect the oil level sensor connector (if equipped) (**2**) .

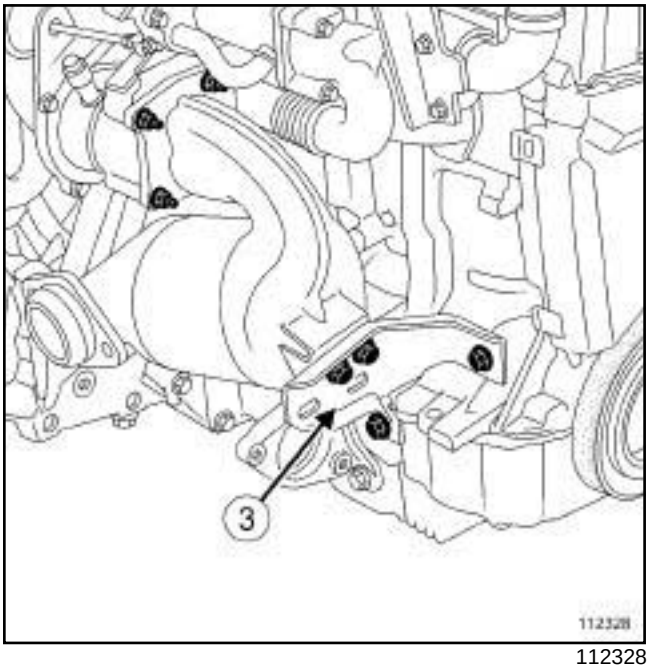

112328

❑ Remove the catalytic converter upstream stay (**3**) .

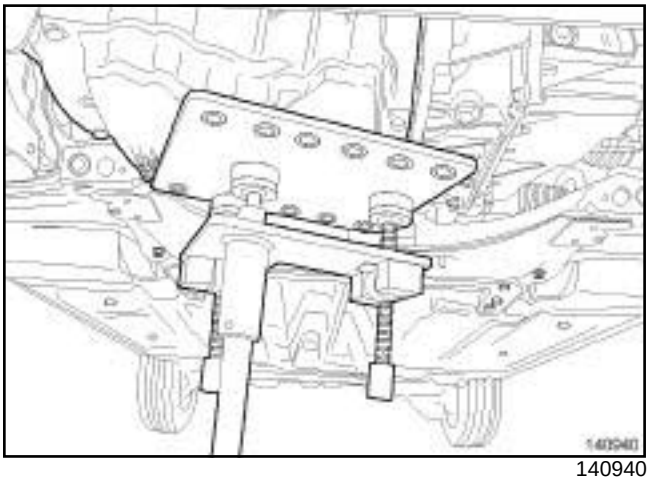
140940

❑

WARNING
Failure to observe the following procedure may damage the oil pump strainer.

Undo the bolts of the engine oil sump.

❑ Fit a **component jack** to support the engine oil sump.

❑ Remove the bolts from the engine oil sump.

❑ Detach the engine oil sump, while supporting it with the **component jack**.

K9K

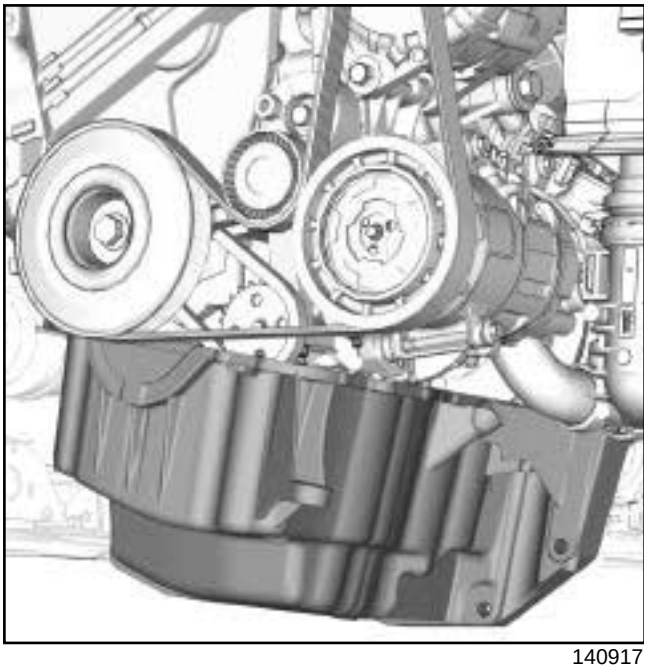

140917

- Tilt the engine oil sump forwards in order to access the oil pump bolts.
- Partially loosen the oil pump bolts **3 mm** to **5 mm**.
- Detach the oil pump from its position in order to remove the engine oil sump.
- Remove:
  - the engine oil sump,
  - the engine oil sump seal,
  - the oil pump.

II - REMOVAL OPERATION FOR THE CON ROD BEARING SHELLS NO.2

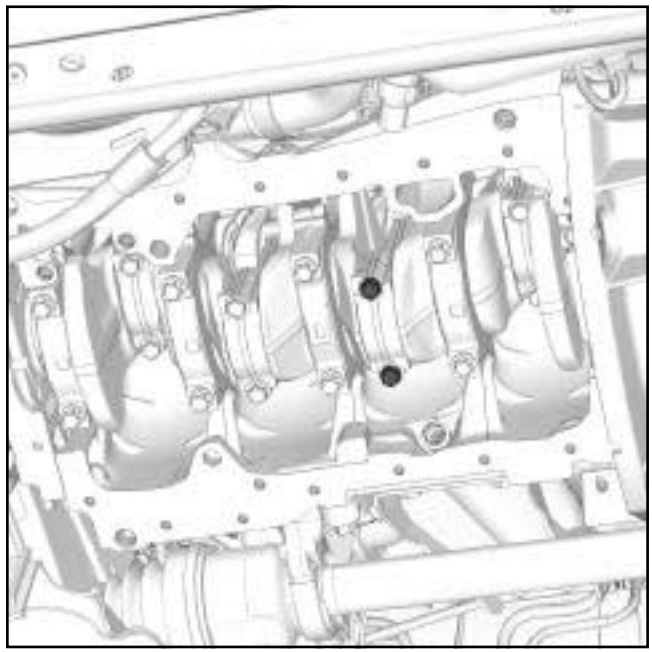

139306

- Use **SURFACE CLEANER** (see **Vehicle: Parts and ingredients for the repairwork**) (04B, Consumables - Products) to clean the big ends.
- Mark the position of the con rod cap in relation to the con rod body using a **indelible pencil**.
- Position the crankshaft at Top Dead Centre.

K9K

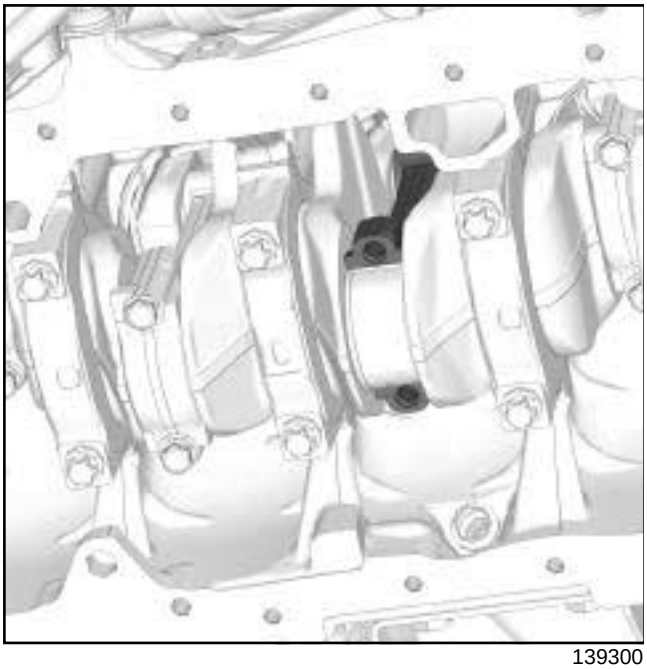

139300

❑ Remove:

- the con rod bolts,
- the con rod cap,
- the lower con rod bearing shell.

> Note:
>
> If reusing the con rod bearing shells, mark the position of the lower con rod bearing shell in relation to the con rod cap.

❑ Use **SURFACE CLEANER** (see **Vehicle: Parts and ingredients for the repairwork**) (04B, Consumables - products) to clean the bearing mating face on the con rod cap.

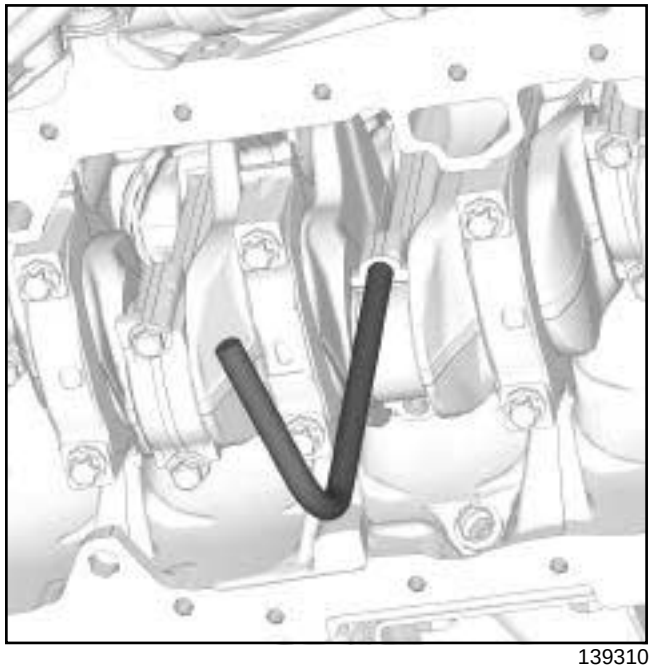

139310

❑ Fit the tie rod of the tool **(Mot. 1914)** on the con rod body.

❑ Push the con rod upwards to release the con rod from the crankpin.

❑ Turn the crankshaft **90°** clockwise (timing end).

K9K

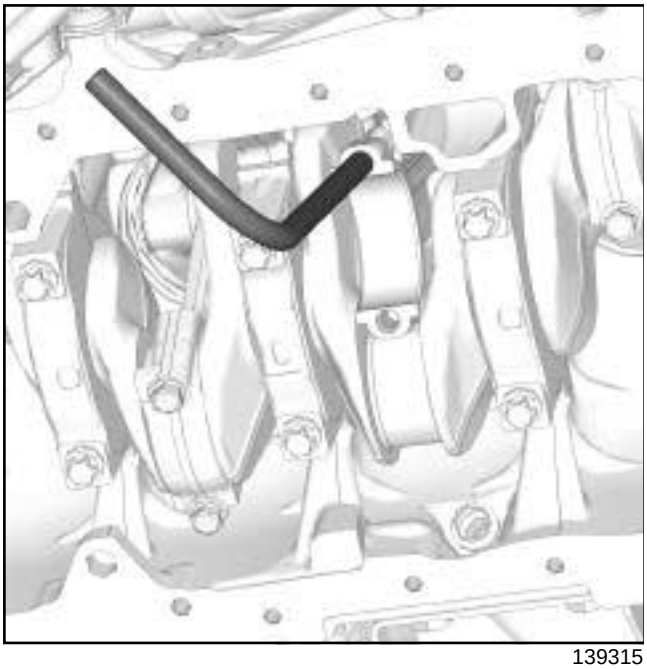

139315

❑

WARNING

Failure to observe the following procedure may damage the piston base cooling jets.

Pull the con rod - piston assembly using the tie rod of the tool **(Mot. 1914)**, taking care not to allow the piston to touch the piston base cooling jets.

❑ Remove the upper con rod bearing shell.

Note:

If reusing the con rod bearing shells, mark the position of the upper con rod bearing shell in relation to the con rod body.

❑ Use **SURFACE CLEANER** (see **Vehicle: Parts and ingredients for the repairwork**) (04B, Consumables - products) to clean the bearing mating face on the con rod body.

REFITTING

I - REFITTING OPERATION FOR THE CON ROD BEARING SHELLS ON CYLINDER NO.2

❑ **parts always to be replaced: con rod cap bolts (10,03,02,10)**

❑

Note:

Always replace con rod bearing shells with a width of **20 mm** by con rod bearing shells with a width of **18 mm**.

If the set of con rod bearing shells only includes con rod bearing shells which are **18mm** wide, only use the head of the tool **(Mot. 1920)** with the marking " **K9K SUP** ".

Fit the head of the tool **(Mot. 1920)** with the marking " **K9K INF** " on the threaded sleeve of the tool **(Mot. 1914)**.

❑ Position the lower con rod bearing shell on the tool **(Mot. 1920)**.

K9K

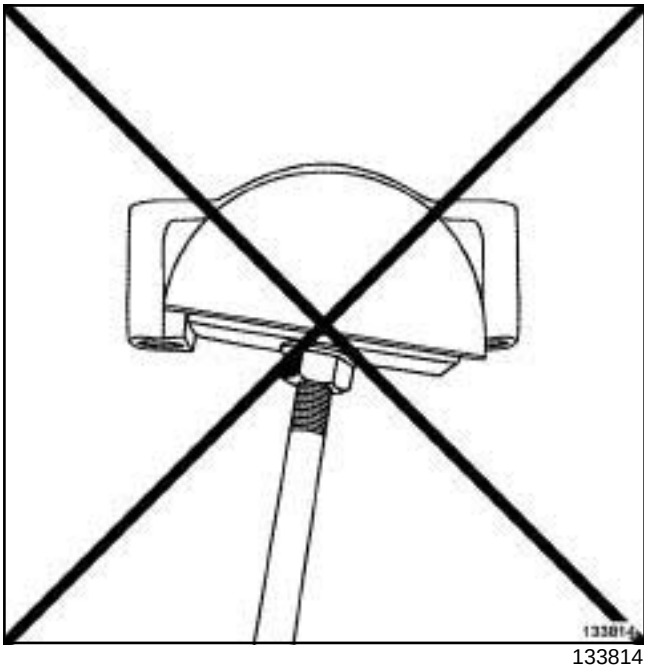

133814

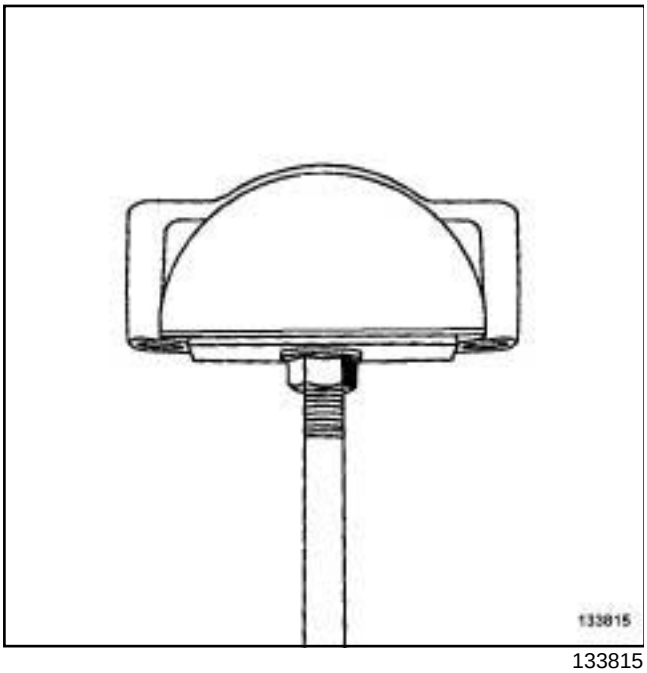

133815

❑

Note:

The contact surface between the bearing shell and the con rod must be dry and free of grease.

Fit the lower con rod bearing shell on the con rod cap using the tool **(Mot. 1920)**.

❑ Position the lower con rod bearing shell so that the ends do not protrude beyond the con rod cap.

❑ Lubricate the surface of the con rod bearing shell (crankshaft end) using new engine oil.

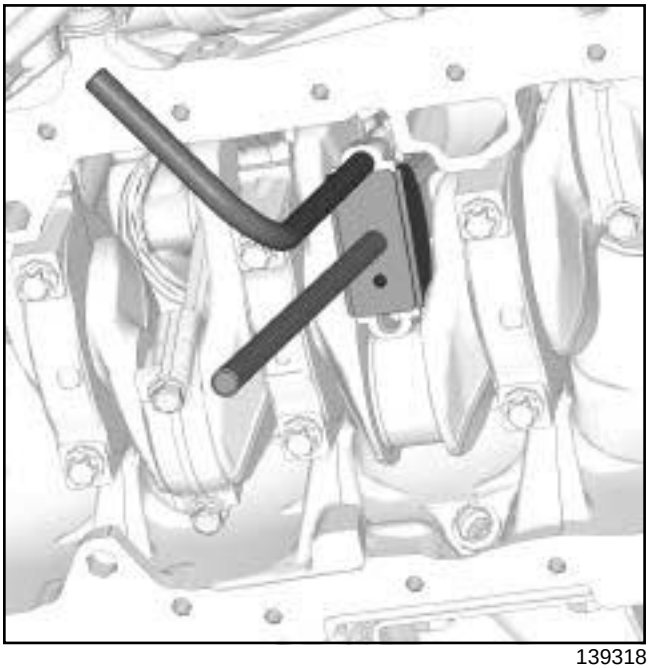

139318

❑ Remove the tool head with the marking " **K9K INF** " and fit the head with the marking " **K9K SUP** ".

❑ Position the upper con rod bearing shell on the tool **(Mot. 1920)**.

❑ Fit the upper con rod bearing shell on the con rod body using the tool **(Mot. 1920)**.

❑ Position the upper con rod bearing shell so that the ends do not protrude beyond the con rod body.

❑ Lubricate the surface of the con rod bearing shell (crankshaft end) using new engine oil.

❑ Push the con rod - piston assembly back up into place.

❑ Turn the crankshaft **90°** anticlockwise.

❑ Lubricate the crankpin with new engine oil.

❑ Pull the con rod - piston assembly to position the con rod on the crankshaft.

❑

Note:

Before refitting the con rod cap, ensure that there are no impurities (filings, cloth lint, etc.) on the con rod body or cap surfaces.

Refit:

- the con rod cap according to the mark made during removal,
- the new con rod bolts.

❑ Torque and angle tighten the **con rod cap bolts (20 N.m + 45° ± 6°)**.

K9K

II - REMOVAL - REFITTING OPERATIONS FOR THE CON ROD BEARING SHELLS ON CYLINDERS NO.3, 1 AND 4

❑ Perform the same removal - refitting operations as for the con rod bearing shells on cylinder no. 2.

> Note:
>
> For removing and refitting the con rod bearing shells on cylinders no. 1 and no. 4, position the pistons at Bottom Dead Centre before perfoming the same removal and refitting operations as for the con rod bearing shells on cylinder no. 2.

III - FINAL OPERATION

❑ **parts always to be replaced: engine oil sump seal (10,03,01,09)**

parts always to be replaced: Oil filter (10,05,05, 03)

parts always to be replaced: Engine oil sump drain plug seal (10,03,01,04)

> **WARNING**
>
> Do not scrape the joint faces of the aluminium, any damage caused to the joint face will result in a risk of leaks.

> **WARNING**
>
> To ensure proper sealing, the gasket surfaces must be clean, dry and not greasy (avoid any finger marks).

❑ Use a wooden spatula or an **ABRASIVE PAD** to clean the joint face of the cylinder block and engine oil sump.

❑ Refit the oil pump.

❑ Fit without tightening the oil pump bolts, while keeping a clearance of **3 mm** to **5 mm**.

❑ Fit the engine oil sump seal.

> **WARNING**
>
> Applying excess sealant could cause it to be squeezed out when parts are tightened. A mixture of sealant and fluid could damage certain components (engine, radiator, etc.).

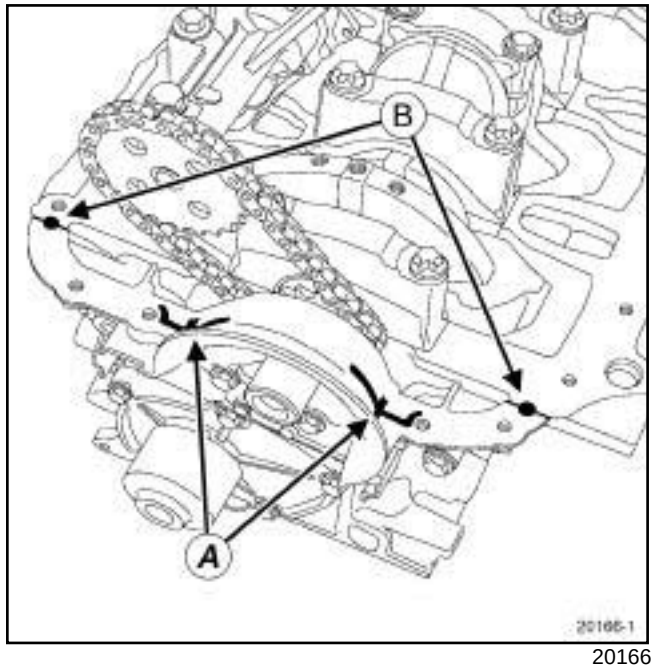

20166

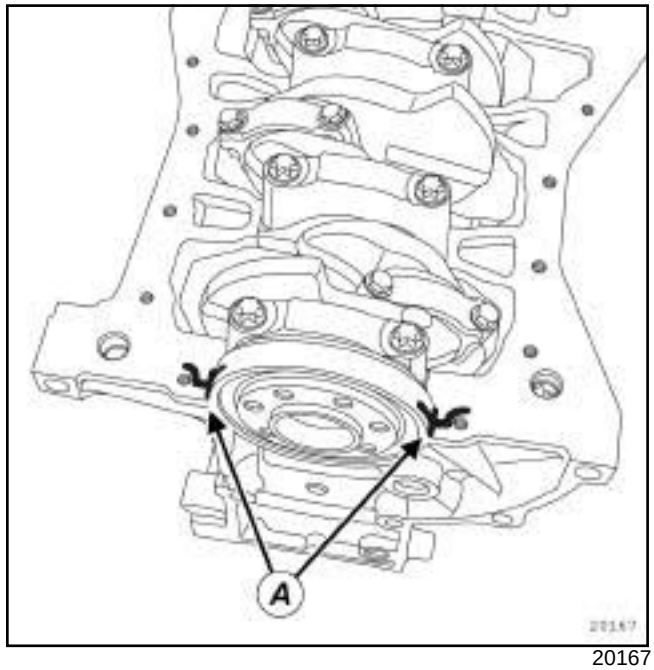

20167

❑ Apply **SILICONE ADHESIVE SEALANT** (see **Vehicle: Parts and ingredients for the repairwork**) :

- four beads with a diameter of **5 mm** at (**A**) ,
- two drops with a diameter of **5 mm** at (**B**) .

❑ Fit the engine oil sump while supporting it using a **component jack**.

K9K

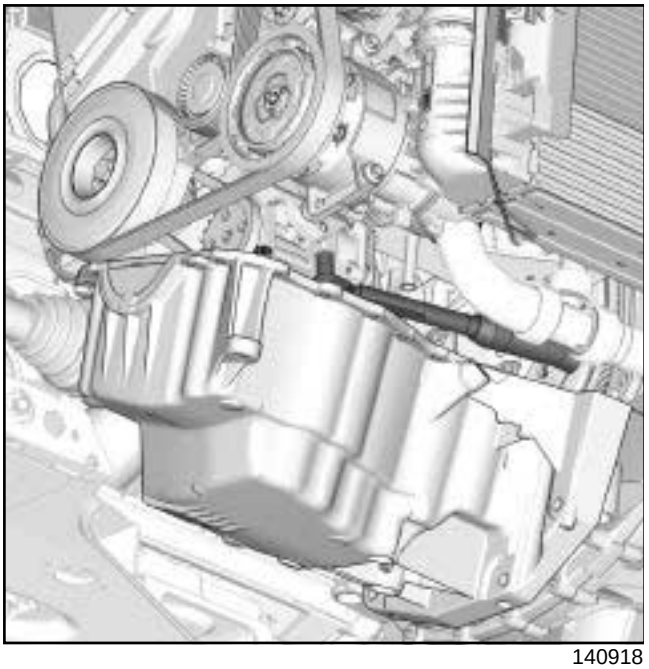

140918

- ❑ Tilt the engine oil sump forwards in order to access the oil pump bolts.
- ❑ Torque tighten the **oil pump bolts (25 N.m)** using the **torque wrench** PROSTEEL, part number **77 11 226 888** starting with the **13 mm** bolt.
- ❑

> Note:
>
> Check that the engine oil sump seal is definitely in place before tightening the engine oil sump bolts.

- ❑ Refit the engine oil sump bolts.
- ❑ Torque tighten in order the engine oil sump bolts (see **10A**, **Engine and cylinder block assembly**, **Sump: Removal - Refitting**, page **10A-6**) .
- ❑ Refit the catalytic converter upstream stay (see **19B**, **Exhaust**, **Catalytic converter: Removal - Refitting**, page **19B-46**) .
- ❑ Connect the connector to the oil level sensor.
- ❑ Refit the relay bearing of the front right-hand wheel driveshaft (see **Front right-hand wheel driveshaft: Removal - Refitting**) .
- ❑ Refit the radiator mounting cross member (see **Radiator support cross member: Removal - Refitting**) (31A, Front axle components).
- ❑ Refit the side reinforcement mountings on the radiator mounting cross member.
- ❑ Refit the mountings of the front right-hand wheel arch liner on the radiator mounting cross member.
- ❑ Remove the **safety strap(s)** from the radiator.
- ❑ Refit the lower engine tie-bar (see **19D**, **Engine mounting**, **Lower engine tie-bar: Removal - Refitting**, page **19D-36**) .

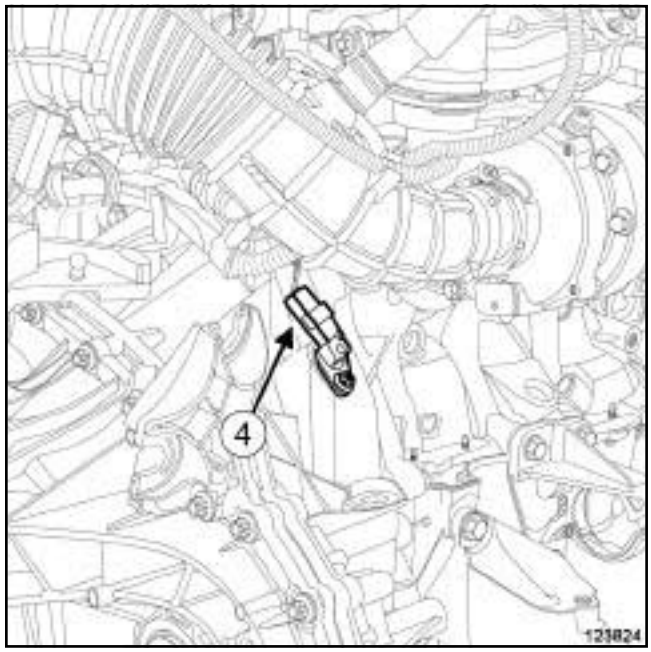

123824

- ❑ Disconnect the crankshaft position sensor (**4**) to prevent the engine from starting.
- ❑ Refit the oil filter (see **10A**, **Engine and cylinder block assembly**, **Oil filter: Removal - Refitting**, page **10A-53**)
- ❑ Fill up the engine oil (see **10A**, **Engine and cylinder block assembly**, **Engine oil: Draining - Refilling**, page **10A-43**) .
- ❑ Start the engine using the starter until the engine oil warning light goes out.
- ❑ Connect the crankshaft position sensor.
- ❑ Refit the engine undertray.
- ❑ Clear the present faults using the **diagnostic tool**.

F4R

Essential special tooling	
Mot. 1018	Sump plug tool.

Essential equipment
oil recovery container
8 mm square drain plug socket

Tightening torques ▽	
drain plug	**20 N.m**

Engine	Average oil capacity (check and adjust with dipstick) (l)	
	Oil change without oil filter replacement	**Oil change plus oil filter replacement**
F4R	5.2	5.3

I - OIL SERVICE

❏ Position the vehicle on a two-post lift (see **Vehicle: Towing and lifting**) (02A, Lifting equipment).

naturally aspirated engine

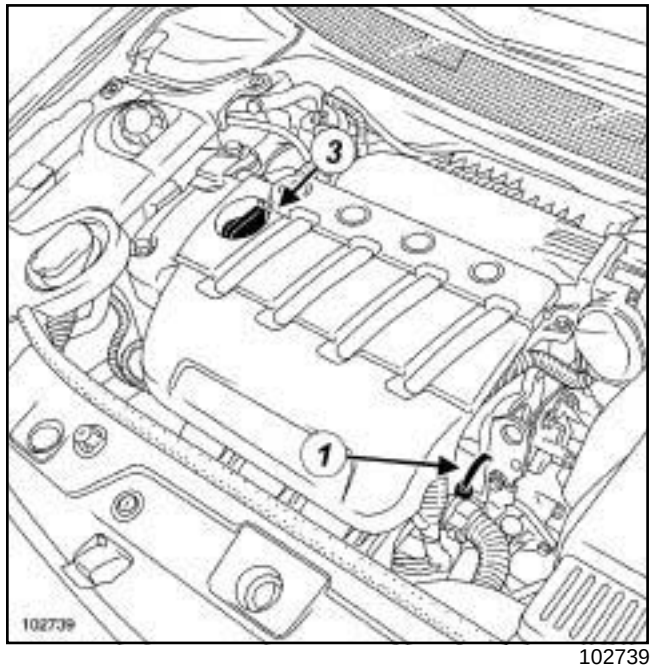

102739

turbocharged engine

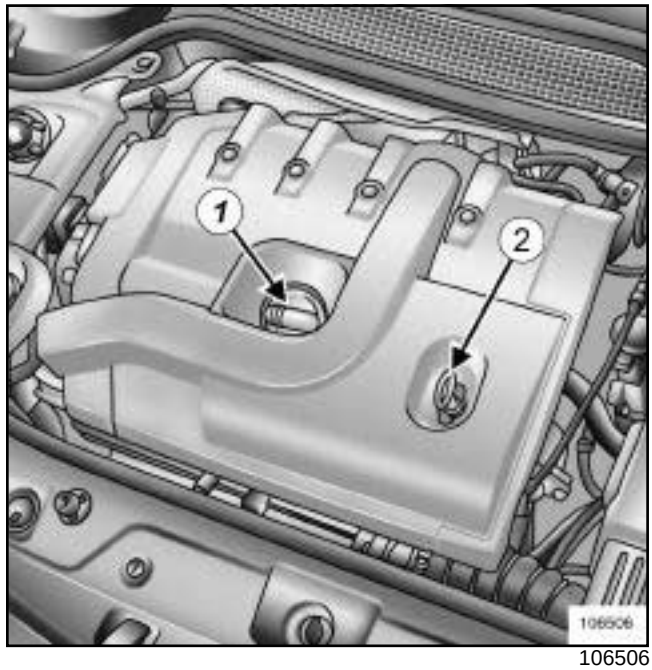

106506

❏ Remove:

- the oil filler cap (**3**) ,
- the dipstick (**2**) .

❏ Remove the engine undertray.

F4R

naturally aspirated and turbocharged engines

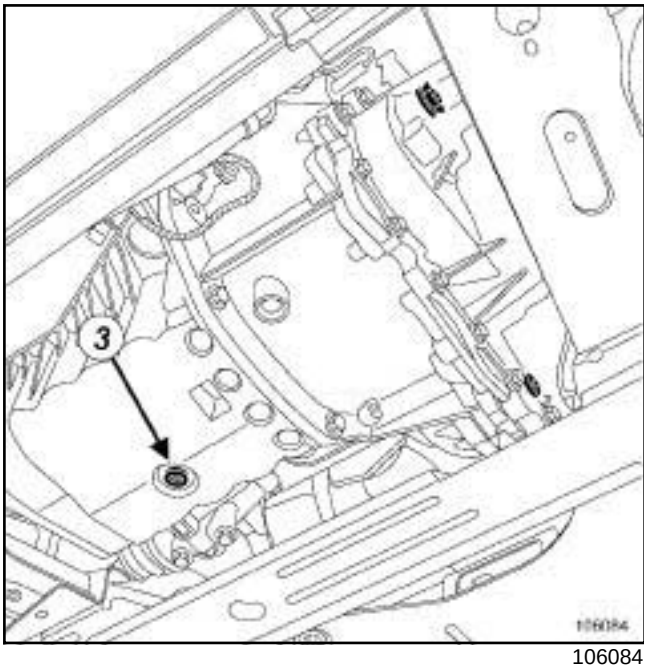

106084

- ❑ Fit a **oil recovery container** under the engine oil drain plug.
- ❑ Remove the drain plug (**3**) using the **(Mot. 1018)**.
- ❑ Allow the engine oil to flow into the oil recovery container.

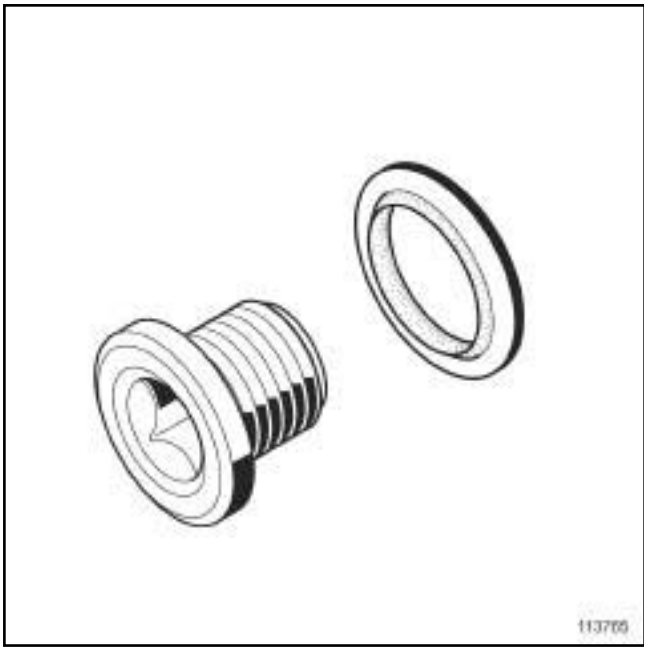

113765

- ❑ Refit the new seal to the drain plug (no direction of fitting).
- ❑ Torque tighten the **drain plug (20 N.m)** using a **8 mm square drain plug socket**.
- ❑ Refit the engine undertray.

II - FILLING

❑

> **WARNING**
>
> Always check the oil level using the dipstick.
>
> Do not exceed the maximum level on the dipstick (as this could damage the engine).
>
> Correct the engine oil level if necessary before delivering the vehicle to the customer.

> Note:
>
> Prevent oil outflow on the engine to avoid damaging the surrounding components.

- ❑ Use a funnel to fill the engine with engine oil recommended by the manufacturer (see **Engine oil: Specifications**) (Technical Note 6013A, 04, Lubricants).

> Note:
>
> When filling up the engine oil, always leave at least **10 minutes** for the oil to drain down before checking the level on the dipstick.

- ❑ Check the level on the dipstick.
- ❑ Refit the engine oil filler cap.

Engine oil: Draining - Refilling

B84 or C84 or E84 or K84 or L84, and M9R

Essential special tooling	
Mot. 1018	Sump plug tool.

Essential equipment
oil recovery container
8 mm square drain plug socket

Tightening torques ▽	
drain plug (with a rolled copper seal)	**44 N.m**
drain plug (with a flat copper seal)	**50 N.m**

Engine	Average oil capacity (check and adjust with dipstick) (l)	
	Oil change without oil filter replacement	**Oil change plus oil filter replacement**
M9R 700	6.2	6.6
M9R 722		
M9R 724	7	7.4

I - OIL SERVICE

❑ Position the vehicle on a two-post lift (see **Vehicle: Towing and lifting**) (02A, Lifting equipment).

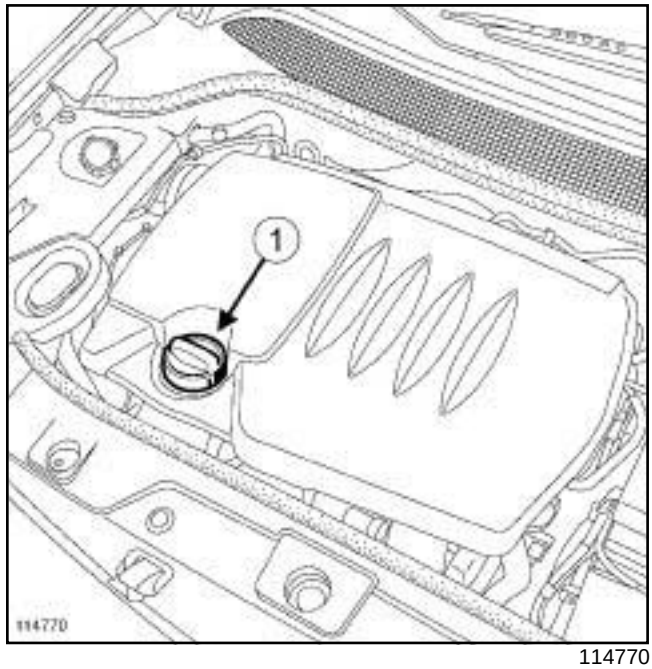

114770

❑ Remove the oil filler cap fitted with the dipstick (**1**) .

❑ Remove the engine undertray.

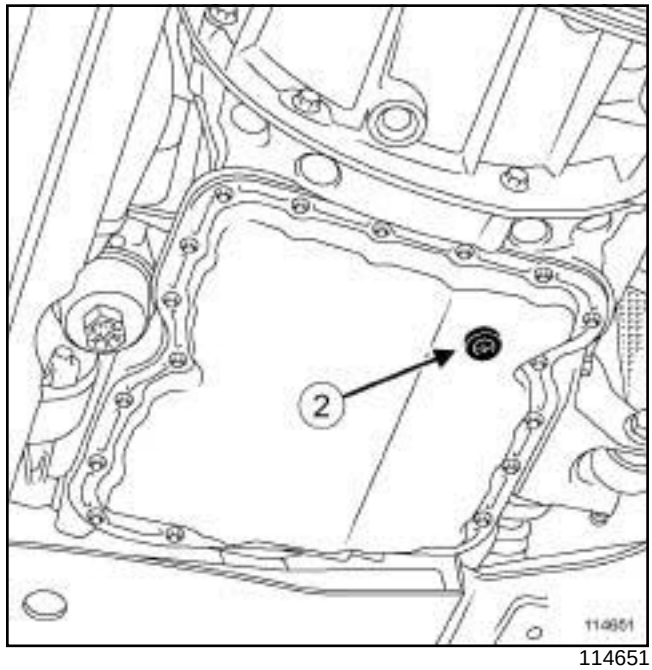

114651

❑ Fit a **oil recovery container** under the engine oil drain plug.

❑ Remove the drain plug (**2**) using the **(Mot. 1018)**.

❑ Allow the engine oil to flow into the oil recovery container.

B84 or C84 or E84 or K84 or L84, and M9R

Copper seal

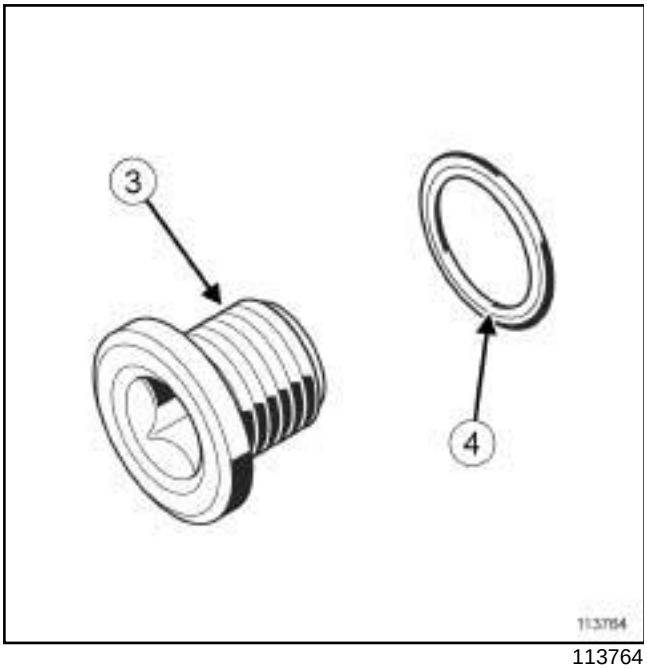

113764

❑

> Note:
>
> There are two types of drain seals for this engine:
>
> - rolled copper seals,
> - flat copper seals.

❑ Fit:

- the new seal on the drain plug (**3**) (if the seal is rolled, orient the groove (**4**) towards the plug),
- the drain plug on the sump.

❑ Using a **8 mm square drain plug socket**, torque tighten the:

- **drain plug (with a rolled copper seal) (44 N.m)**,
- **drain plug (with a flat copper seal) (50 N.m)**.

❑ Refit the engine undertray.

II - FILLING

❑

> **WARNING**
>
> Always check the oil level using the dipstick.
>
> Do not exceed the maximum level on the dipstick (as this could damage the engine).
>
> Correct the engine oil level if necessary before delivering the vehicle to the customer.

> Note:
>
> Prevent oil outflow on the engine to avoid damaging the surrounding components.

❑ Use a funnel to fill the engine with engine oil recommended by the manufacturer (see **Engine oil: Specifications**) (Technical Note 6013A, 04, Lubricants).

❑ Check the level on the dipstick.

> Note:
>
> When filling up the engine oil, always leave at least **10 minutes** for the oil to drain down before checking with a dipstick.

❑ Refit the engine oil filler cap.

K9K

Essential special tooling	
Mot. 1018	Sump plug tool.

Essential equipment
oil recovery container
8 mm square drain plug socket

Tightening torques ▽	
drain plug	**20 N.m**

Engine	Average oil capacity (check and adjust with dipstick) (l)	
	Oil change without oil filter replacement	**Oil change plus oil filter replacement**
K9K	4.4	4.5

I - OIL SERVICE

❑ Position the vehicle on a two-post lift (see **Vehicle: Towing and lifting**) (02A, Lifting equipment).

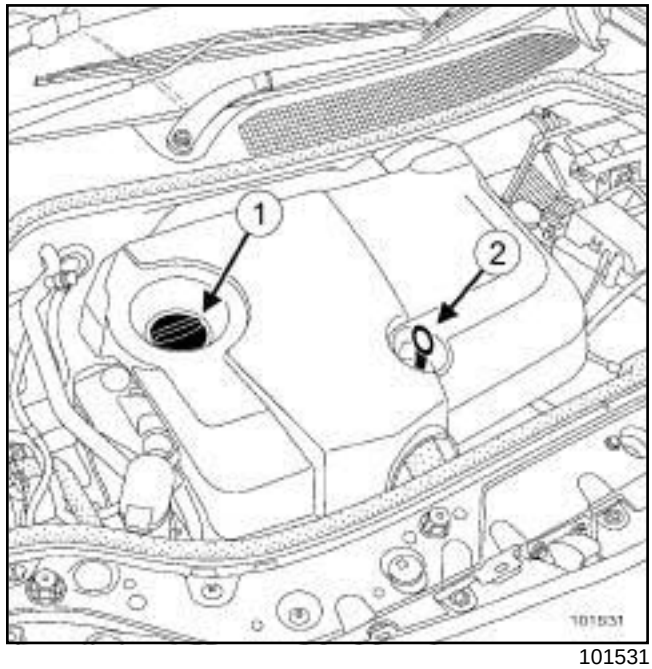

101531

❑ Remove:

- the oil filler cap (**1**) ,
- the dipstick (**2**) .

❑ Remove the engine undertray.

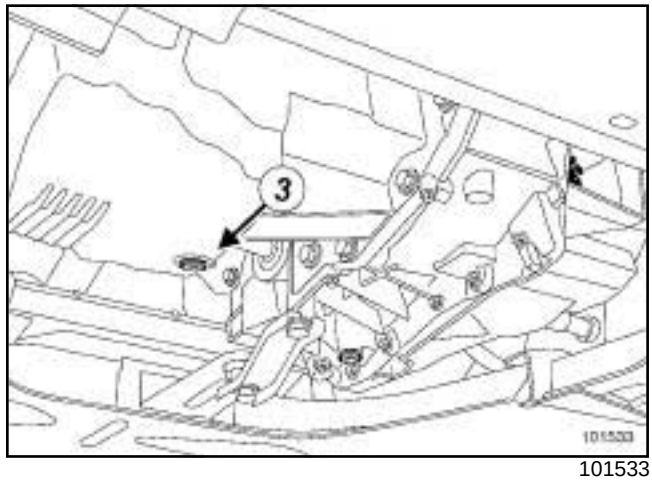

101533

❑ Fit a **oil recovery container** under the engine oil drain plug.

❑ Remove the drain plug (**3**) using the **(Mot. 1018)**.

❑ Allow the engine oil to flow into the oil recovery container.

K9K

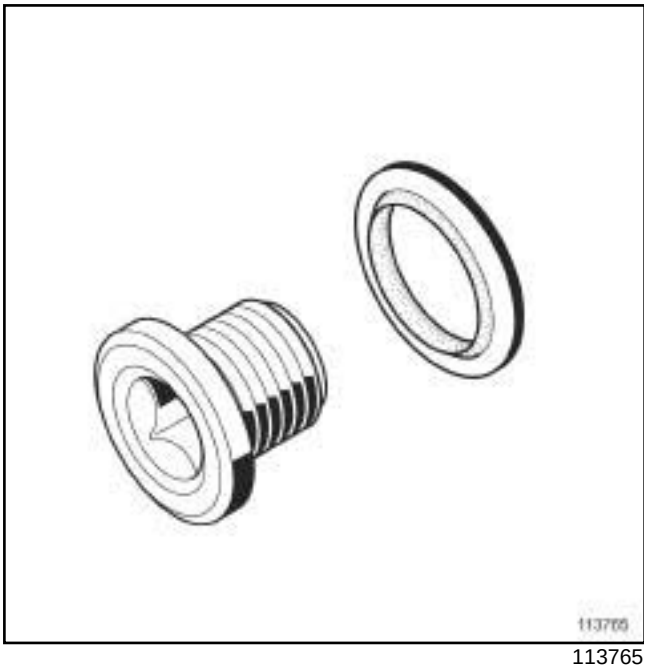

113765

- ❑ Refit the new seal to the drain plug (no direction of fitting).
- ❑ Torque tighten the **drain plug (20 N.m)** using a **8 mm square drain plug socket**.
- ❑ Refit the engine undertray.

II - FILLING

❑

> **WARNING**
>
> Always check the oil level using the dipstick.
>
> Do not exceed the maximum level on the dipstick (as this could damage the engine).
>
> Correct the engine oil level if necessary before delivering the vehicle to the customer.

> Note:
>
> Prevent oil outflow on the engine to avoid damaging the surrounding components.

- ❑ Use a funnel to fill the engine with engine oil recommended by the manufacturer (see **Engine oil: Specifications**) (Technical Note 6013A, 04, Lubricants).

> Note:
>
> When filling up the engine oil, always leave at least **10 minutes** for the oil to drain down before checking the level on the dipstick.

- ❑ Check the level on the dipstick.
- ❑ Refit the engine oil filler cap.

K4J or K4M

Essential special tooling	
Mot. 1018	Sump plug tool.

Essential equipment
oil recovery container
8 mm square drain plug socket

Tightening torques ▽	
drain plug	**20 N.m**

Engine	Average oil capacity (adjust using dipstick) (litres)	
	oil change without oil filter replacement	**Oil change plus oil filter replacement**
K4J, K4M	4.7	4.8

I - OIL SERVICE

❑ Position the vehicle on a two-post lift (see **Vehicle: Towing and lifting**) (02A, Lifting equipment).

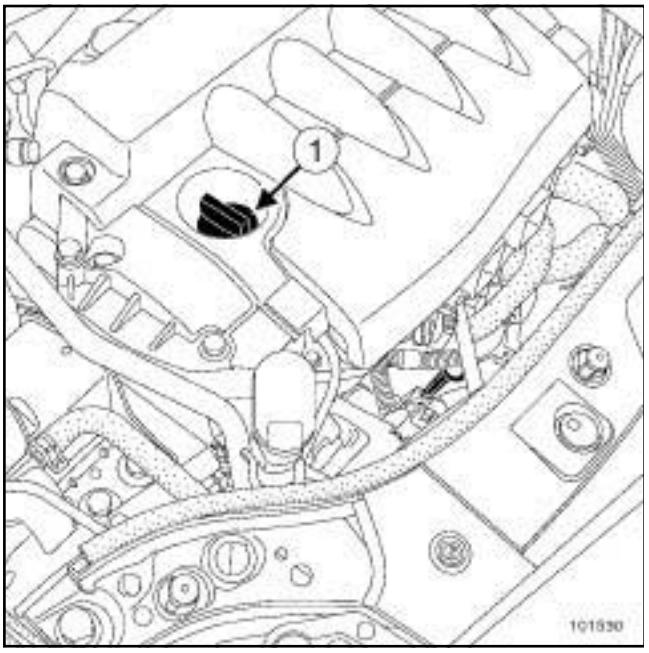

101530

❑ Remove:

- the oil filler cap (**1**) ,
- the dipstick.

❑ Remove the engine undertray.

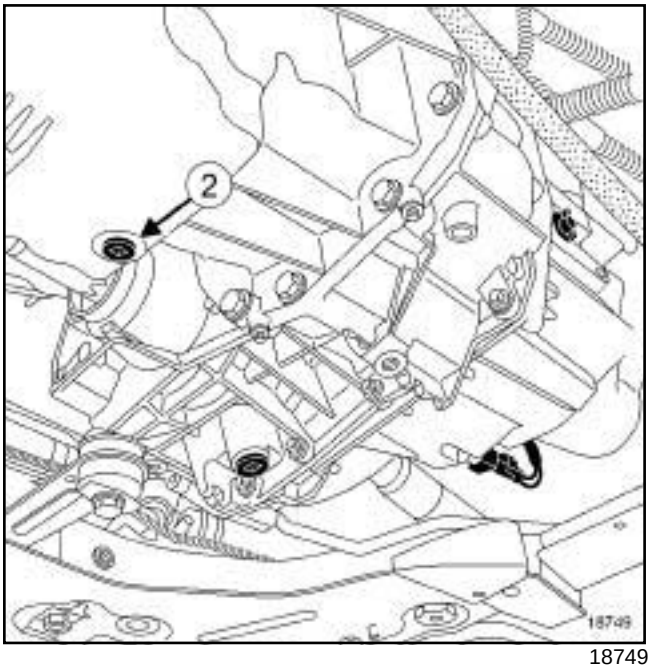

18749

❑ Fit a **oil recovery container** under of the engine oil drain plug.

❑ Remove the drain plug (**2**) using the **(Mot. 1018)**.

❑ Allow the engine oil to flow into the oil recovery container.

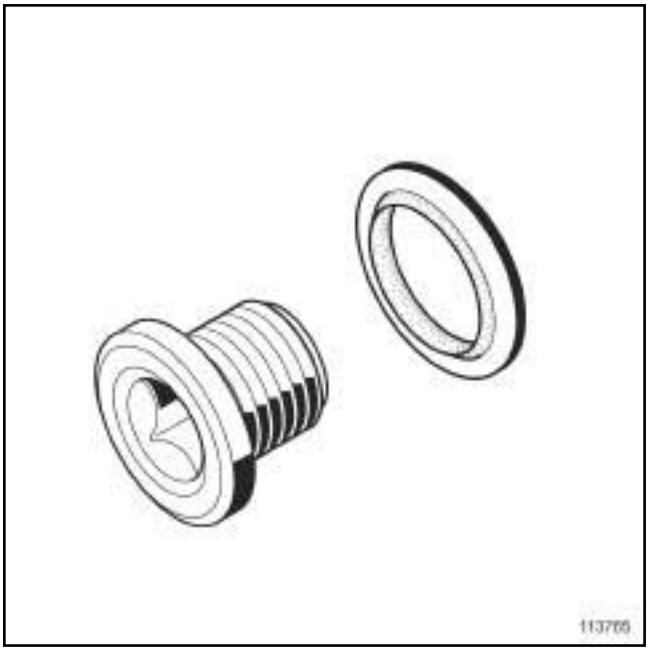

113765

❑ Refit the new seal to the drain plug (no direction of fitting).

❑ Torque tighten the **drain plug (20 N.m)** using a **8 mm square drain plug socket**.

❑ Refit the engine undertray.

K4J or K4M

II - FILLING

❑

WARNING

Always check the oil level using the dipstick.

Do not exceed the maximum level on the dipstick (as this could damage the engine).

Correct the engine oil level if necessary before delivering the vehicle to the customer.

Note:

Prevent oil outflow on the engine to avoid damaging the surrounding components.

❑ Use a funnel to fill the engine with engine oil recommended by the manufacturer (see **Engine oil: Specifications**) (Technical Note 6013A, 04, Lubricants).

Note:

When filling up the engine oil, always leave at least **10 minutes** for the oil to drain down before checking the level on the dipstick.

❑ Check the level on the dipstick.

Note:

When filling up the engine oil, always leave at least **10 minutes** for the oil to drain down before checking with a dipstick.

❑ Refit the engine oil filler cap.

F9Q

Essential special tooling	
Mot. 1018	Sump plug tool.

Essential equipment
oil recovery container
8 mm square drain plug socket

Tightening torques ▽	
drain plug	**20 N.m**

Engine	Average oil capacity (adjust using dipstick) (litres)	
	oil change without oil filter replacement	**Oil change plus oil filter replacement**
F9Q without particle filter	4.5	4.6
F9Q with particle filter	4.7	4.9

I - OIL SERVICE

❑ Position the vehicle on a two-post lift (see **Vehicle: Towing and lifting**) (02A, Lifting equipment).

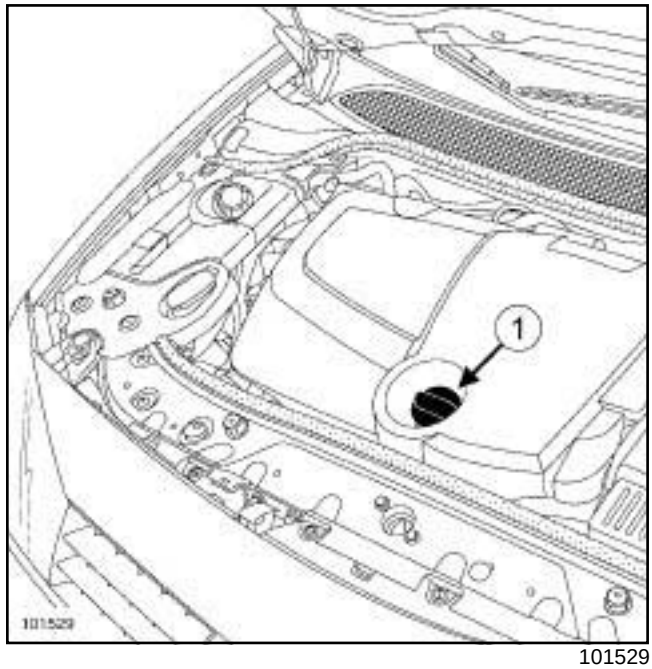

101529

❑ Remove:

- the oil filler cap (**1**) ,
- the dipstick.

❑ Remove the engine undertray.

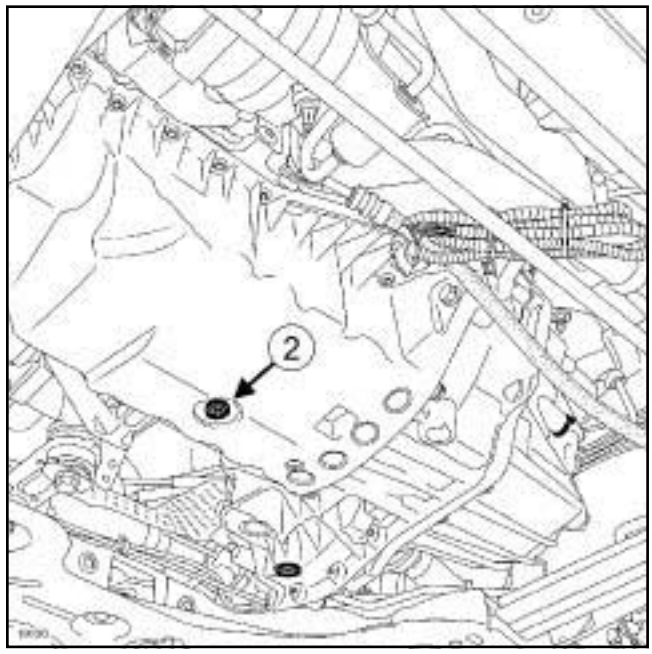

19120

❑ Fit a **oil recovery container** under the engine oil drain plug.

❑ Remove the drain plug (**2**) using the **(Mot. 1018)**.

❑ Allow the engine oil to flow into the oil recovery container.

F9Q

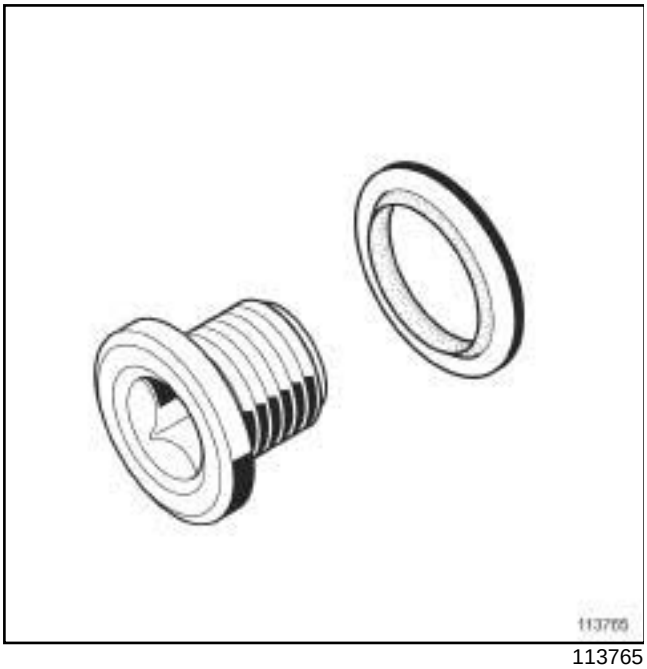

113765

- ❑ Fit the new seal to the drain plug (no direction of fitting).
- ❑ Torque tighten the **drain plug (20 N.m)** using a **8 mm square drain plug socket**.
- ❑ Refit the engine undertray.

II - FILLING

❑

> **WARNING**
>
> Always check the oil level using the dipstick.
>
> Do not exceed the maximum level on the dipstick (as this could damage the engine).
>
> Correct the engine oil level if necessary before delivering the vehicle to the customer.

> Note:
>
> Prevent oil outflow on the engine to avoid damaging the surrounding components.

- ❑ Use a funnel to fill the engine with engine oil recommended by the manufacturer (see **Engine oil: Specifications**) (Technical Note 6013A, 04, Lubricants).

> Note:
>
> When filling up the engine oil, always leave at least **10 minutes** for the oil to drain down before checking the level on the dipstick.

- ❑ Check the level on the dipstick.
- ❑ Refit the engine oil filler cap.

B84 or C84 or G84 or S84, and K9K

Essential special tooling	
Mot. 1329	Oil filter removing tool (76 mm diameter).

REMOVAL

I - REMOVAL PREPARATION OPERATION

❏ Position the vehicle on a two-post lift (see **Vehicle: Towing and lifting**) (02A, Lifting equipment).

❏ Remove:

- the engine undertray bolts,
- the engine undertray.

II - OPERATION FOR REMOVAL OF PART CONCERNED

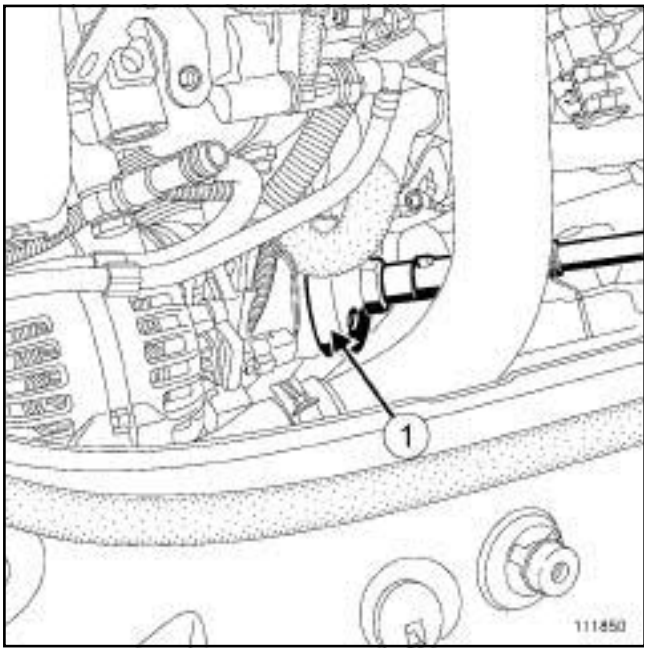

111850

❏ Position the **(Mot. 1329)** (**1**) on the oil filter.

❏ Remove the oil filter.

REFITTING

I - REFITTING PREPARATION OPERATION

❏ Lubricate the oil filter seal with new engine oil.

II - REFITTING OPERATION FOR PART CONCERNED

❏ Tighten the oil filter until it comes into contact with the oil filter seal on the oil-water heat exchanger.

❏ Tighten the oil filter three-quarters of a turn by hand.

III - FINAL OPERATION

❏ Wipe any oil run-off with a cloth.

❏ Top up the engine oil.

❏ Refit the engine undertray.

Oil filter: Removal - Refitting

B84 or C84 or G84 or S84, and F4R, and 770 or 771 or 776

Essential special tooling	
Mot. 1329	Oil filter removing tool (76 mm diameter).

Tightening torques ▽	
air conditioning compressor stay mounting bolts	**44 Nm**

REMOVAL

❑ Position the vehicle on a two-post lift (see **Vehicle: Towing and lifting**) (MR 364, 02A, Lifting equipment).

❑ Remove the engine undertray.

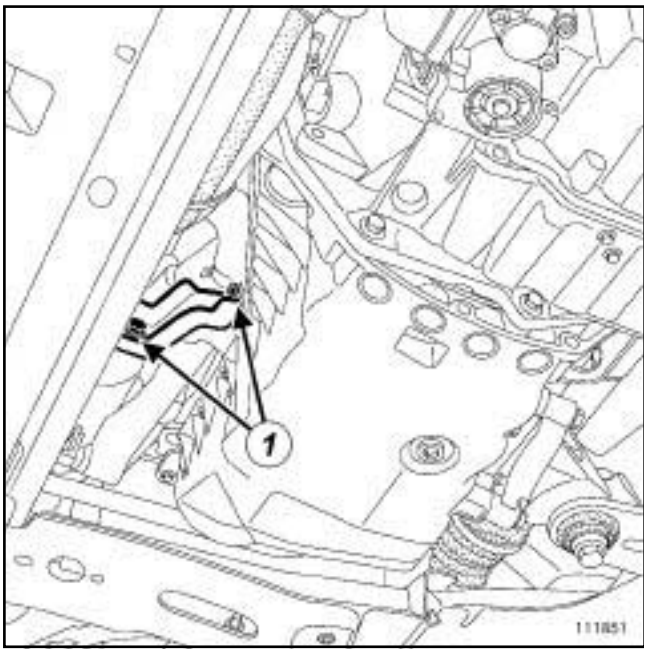

111851

❑ Remove:

- the mounting bolts (**1**) from the air conditioning compressor stay.
- the air conditioning compressor stay.

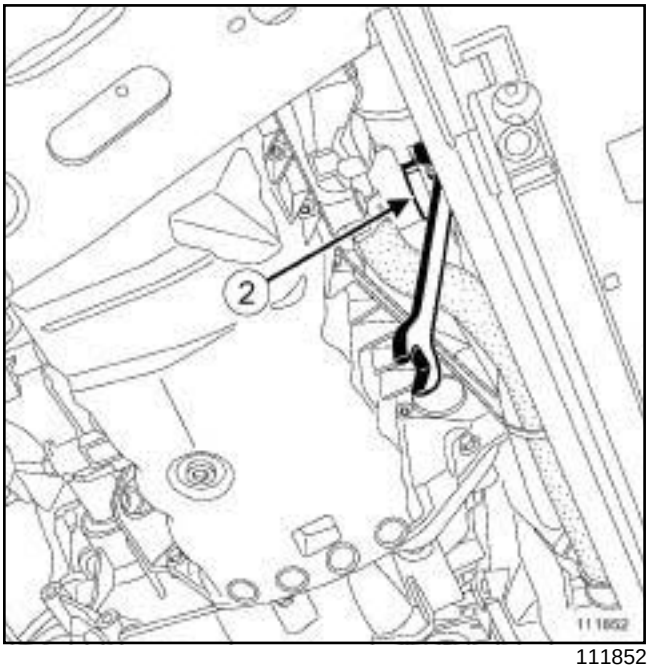

111852

❑ Position the **(Mot. 1329)** (**2**) on the oil filter.

❑ Remove the oil filter.

REFITTING

❑ Lubricate the oil filter seal with new engine oil.

❑ Tighten the oil filter until it comes into contact with the oil filter seal on the engine.

❑ Tighten the oil filter 3/4 of a turn by hand.

❑ Refit the air conditioning compressor strut.

❑ Torque tighten the **air conditioning compressor stay mounting bolts (44 Nm)**.

❑ Top up the engine oil.

❑ Wipe any oil run-off with a cloth.

❑ Refit the engine undertray.

B84 or C84 or G84 or S84, and K4M – B84 or C84 or G84 or S84, and K4J

Essential special tooling	
Mot. 1329	Oil filter removing tool (76 mm diameter).

REMOVAL

- ❑ Position the vehicle on a two-post lift (see **Vehicle: Towing and lifting**) (MR 364, 02A, Lifting equipment).
- ❑ Remove the engine undertray.

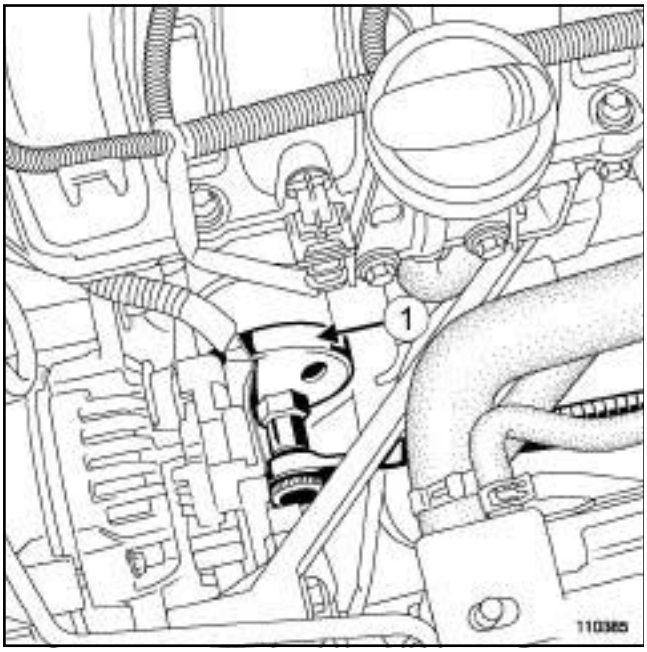

110385

- ❑ Position the **(Mot. 1329)** (**1**) on the oil filter.
- ❑ Remove the oil filter.

REFITTING

- ❑ Lubricate the oil filter seal with new engine oil.
- ❑ Tighten the oil filter until it comes into contact with the oil filter seal on the engine.
- ❑ Tighten the oil filter by hand **« 3/4 »** of a turn.
- ❑ Top up the engine oil.
- ❑ Refit the engine undertray.

B84 or C84 or G84 or S84, and M9R

Tightening torques ▽	
cover	**25 N.m**

REMOVAL

I - REMOVAL PREPARATION OPERATION

❑ Position the vehicle on a two-post lift (see **Vehicle: Towing and lifting**) (MR 364, 02A, Lifting equipment).

❑ Remove the engine undertray.

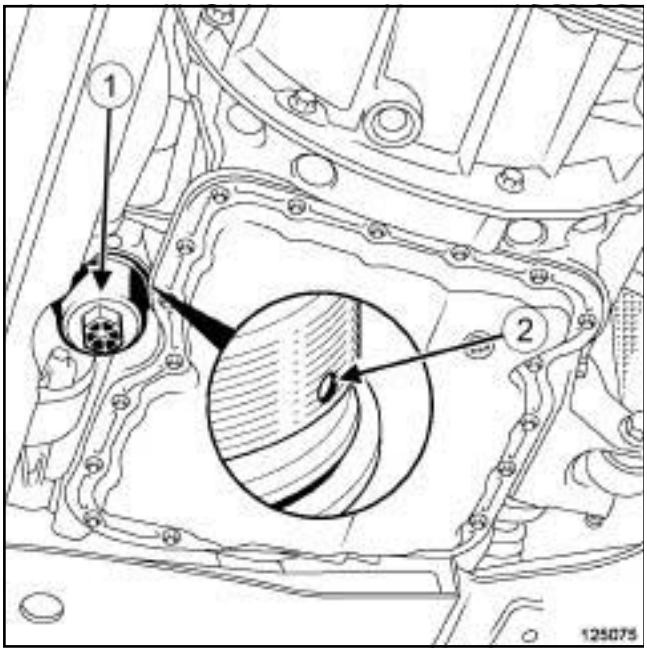

125075

❑ Undo the cover (1) of the oil filter unit until the hole (2) appears.

❑ Allow the engine oil to flow out.

II - REMOVAL OPERATION FOR PART CONCERNED

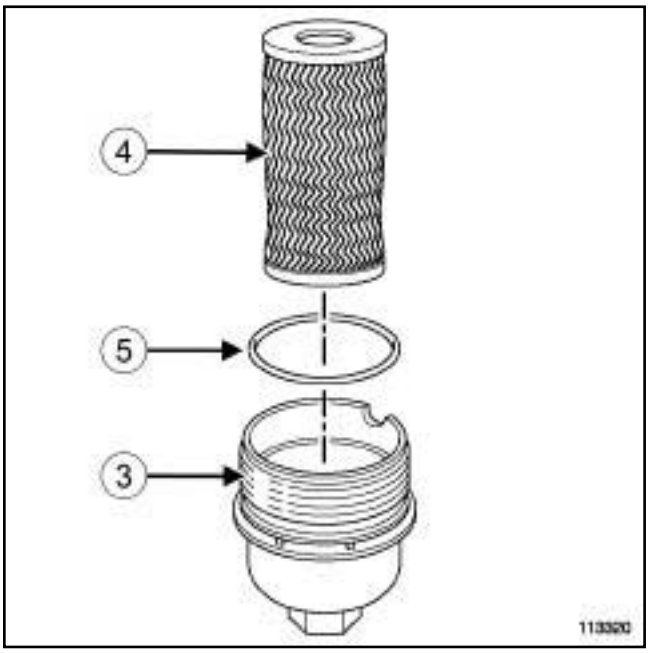

113320

❑ Remove:

- the “cover (3) - filter element (4)” assembly,
- the cover seal (5).

REFITTING

I - REFITTING PREPARATIONS OPERATION

❑ Clean the oil filter unit cover.

B84 or C84 or G84 or S84, and M9R

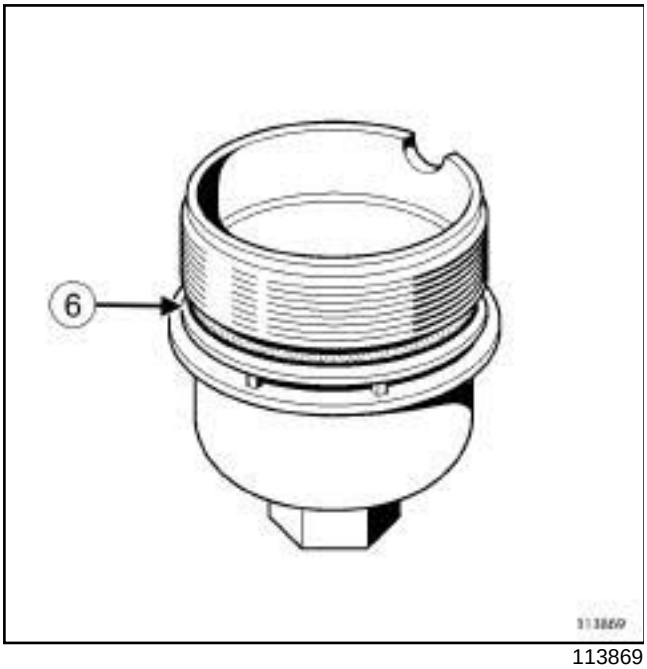

113869

❑ Fit:

- a **new** seal on the cover,
- a **new** filter cartridge in the cover.

II - REFITTING OPERATION FOR PART CONCERNED

❑ Manually fit the “cover - filter element” assembly.

❑ Torque tighten the **cover (25 N.m)**.

III - FINAL OPERATION.

❑ Refit the engine undertray.

❑ Fill the engine with engine oil recommended by the manufacturer (see **Engine oil: Specifications**) (Technical Note 6013, 04A, Lubricants).

❑ Start the engine and let it run until the oil pressure warning light goes off.

WARNING

Always check the oil level using the dipstick.

Do not exceed the maximum level on the dipstick (could destroy the engine).

Correct the engine oil level if necessary before delivering the vehicle to the customer.

Note:

When filling up the engine oil, always leave at least **10 minutes** for the oil to drain down before checking the level on the dipstick.

B84 or C84 or G84 or S84, and F9Q

Essential special tooling	
Mot. 1329	Oil filter removing tool (76 mm diameter).

If the AC pipe is significantly deformed when the oil filter is removed, there may be a refrigerant leak.

To manage the risk of a leak in the MEGANE II and SCENIC II equipped with F9Q engine, the ADVICE in this Technical Note relating to the removal of the oil filter from the TOP OF THE ENGINE must be strictly followed.

REMOVAL

I - REMOVAL PREPARATION OPERATION

❏ Position the vehicle on a two-post lift (see **Vehicle: Towing and lifting**) (MR 364, 02A, Lifting equipment).

❏ Remove:

- the engine covers,
- the engine undertray.

❏ Drain the engine oil (see **10A**, **Engine and cylinder block assembly**, **Engine oil: Draining - Refilling**, page **10A-43**) .

II - REMOVING THE OIL FILTER

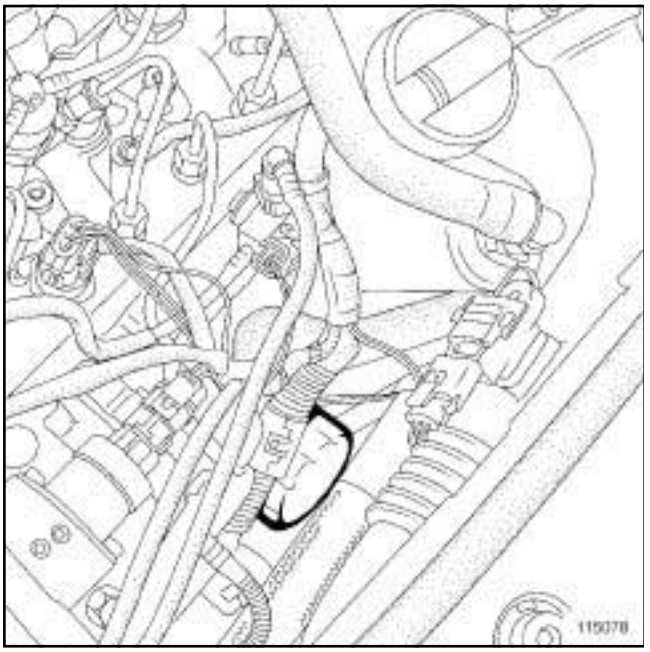

115078

❏ From the top of the engine, position the **(Mot. 1329)** with a **27 mm** open-jawed spanner on the oil filter.

❏ Remove the oil filter.

REFITTING

I - REFITTING PREPARATIONS OPERATION

❏ Lubricate the new oil filter seal.

II - REFITTING THE OIL FILTER

❏ Tighten the oil filter until it makes contact.

❏ Tighten the oil filter 3/4 of a turn by hand.

III - FINAL OPERATION.

❏ Top up the engine oil (see **10A**, **Engine and cylinder block assembly**, **Engine oil: Draining - Refilling**, page **10A-43**) .

❏ Refit:

- the engine undertray,
- the engine covers.

B84 or C84 or E84 or K84 or L84, and M9R

Essential special tooling	
Car. 1363	Set of trim removal levers.
Mot. 1448	Long nose pliers for hose clips.

Essential equipment
refrigerant charging station

Tightening torques ▽	
oil filter unit bolts (2) and (4) (initial torque)	**5 N.m**
oil filter unit bolts	**25 N.m**
intercooler air inlet pipe	**5.5 N.m**
intercooler air outlet pipe	**5.5 N.m**
front end panel lower bolts	**44 N.m**
front end panel upper bolts	**21 N.m**

REMOVAL

I - REMOVAL PREPARATION OPERATION

❑ Position the vehicle on a two-post lift (see **Vehicle: Towing and lifting**) (02A, Lifting equipment).

❑ Remove the front engine cover.

❑ Disconnect the battery (see **Battery: Removal - Refitting**) (80A, Battery).

❑ Remove:

- the engine undertray bolts,
- the engine undertray,
- the oil filter (see **10A**, **Engine and cylinder block assembly**, **Oil filter: Removal - Refitting**, page **10A-53**) ,
- the front bumper (see **Front bumper: Removal - Refitting**) (55A, Exterior protection).

❑ Drain the refrigerant circuit using a **refrigerant charging station** (see **Coolant circuit Draining - Refilling**) (62A, Air conditioning).

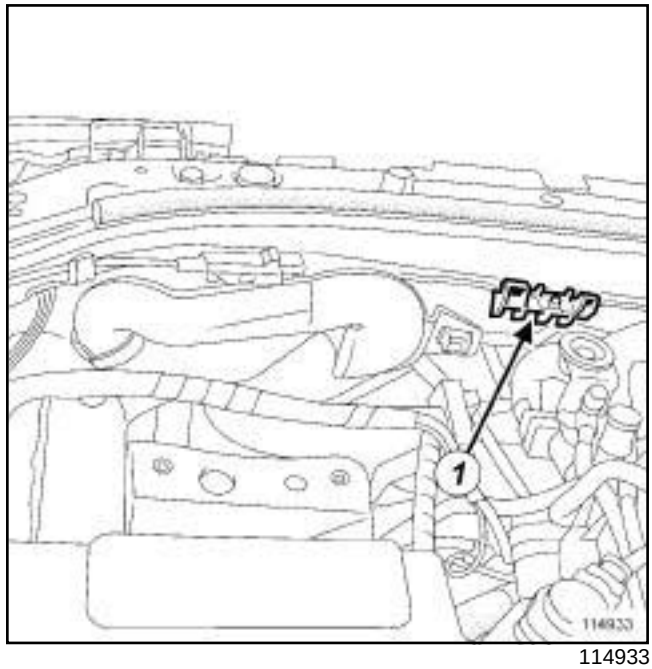

114933

❑ Unclip the air inlet scoop (**1**) .

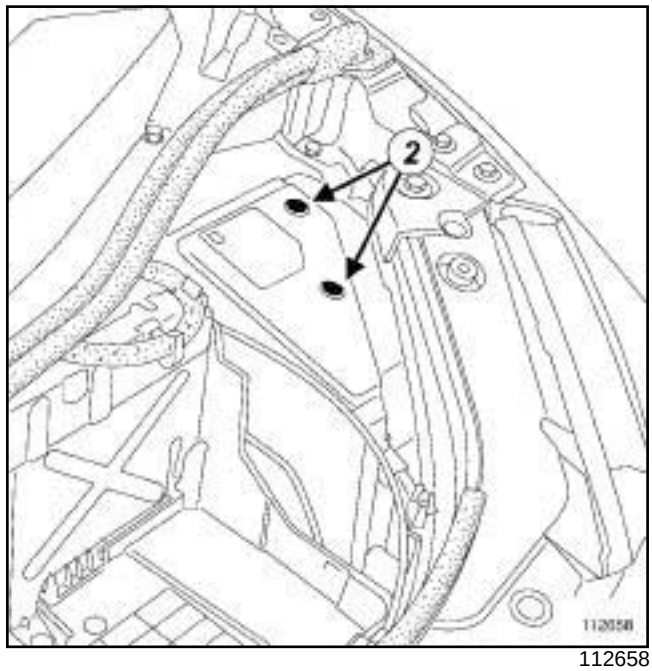

112658

❑ Remove:

- the engine accessories unit cover bolts (**2**) ,
- the engine accessories unit cover.

B84 or C84 or E84 or K84 or L84, and M9R

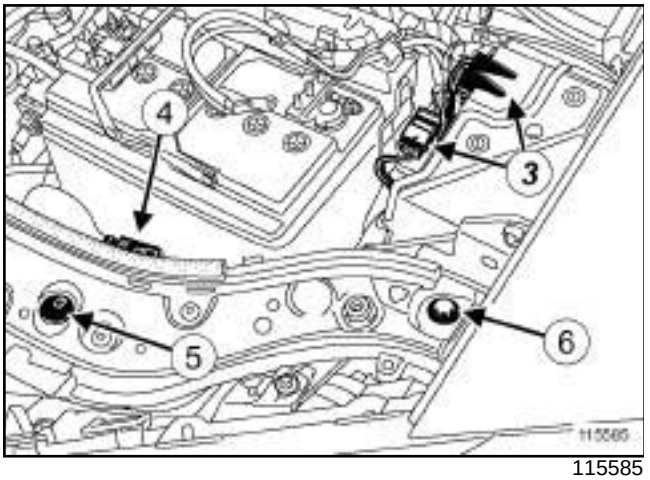

115585

- ❑ Disconnect the connectors (**3**) from the engine accessories unit.
- ❑ Unfasten the bonnet opening cable (**4**) .
- ❑ Remove:
  - the front end panel clips (**5**) ,
  - the front end panel upper bolts (**6**) .
- ❑ Disconnect the screen washer pipes.

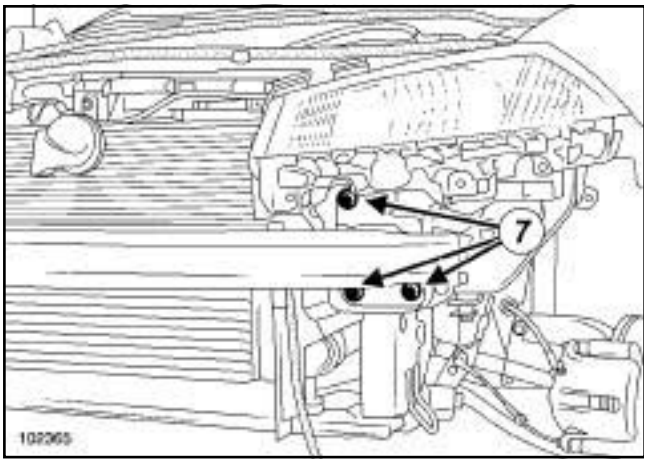

102365

- ❑ Remove:
  - the front end panel lower bolts (**7**) ,
  - the front panel,
  - the air inlet scoop.
- ❑ Drain the engine cooling system (see **19A**, **Cooling**, **Cooling circuit: Draining - Refilling**, page **19A-15**) .

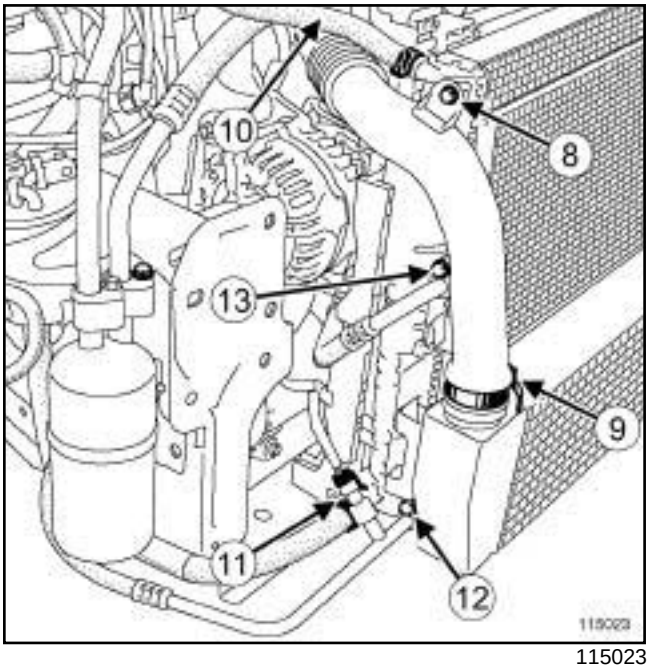

115023

- ❑ Remove the bolts (**8**) from the intercooler air outlet pipe.
- ❑ Undo the clip on the intercooler air outlet pipe (**9**) at the intercooler end.
- ❑ Disconnect:
  - the intercooler air outlet pipe at the intercooler end,
  - the pipes between the expansion bottle and the cooling radiator (**10**) on the cooling radiator side,
  - the evaporator-condenser connecting hose pressure sensor connector (**11**) .
- ❑ Unclip the wiring of the pressure sensor connector on the engine cooling fan assembly.
- ❑ Remove:
  - the bolt (**12**) of the « condenser - evaporator » connecting pipe on the condenser side,
  - the bolt (**13**) of the « compressor - condenser » connecting pipe on the condenser side.
- ❑ Disconnect:
  - the « condenser - evaporator » connecting pipe on the condenser side,
  - the « compressor - condenser » connecting pipe on the condenser side.

WARNING
To prevent moisture from entering the system, place plugs on the cold loop components which are open to the air.

B84 or C84 or E84 or K84 or L84, and M9R

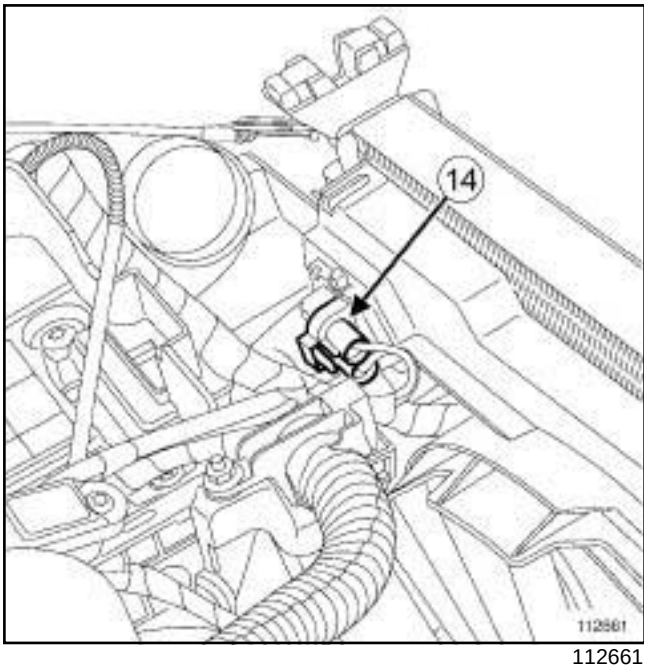

112661

- ❑ Disconnect:
  - the engine cooling fan assembly resistor connector (**14**) ,
  - the engine cooling fan assembly connector.
- ❑ Unclip the engine cooling fan assembly wiring.

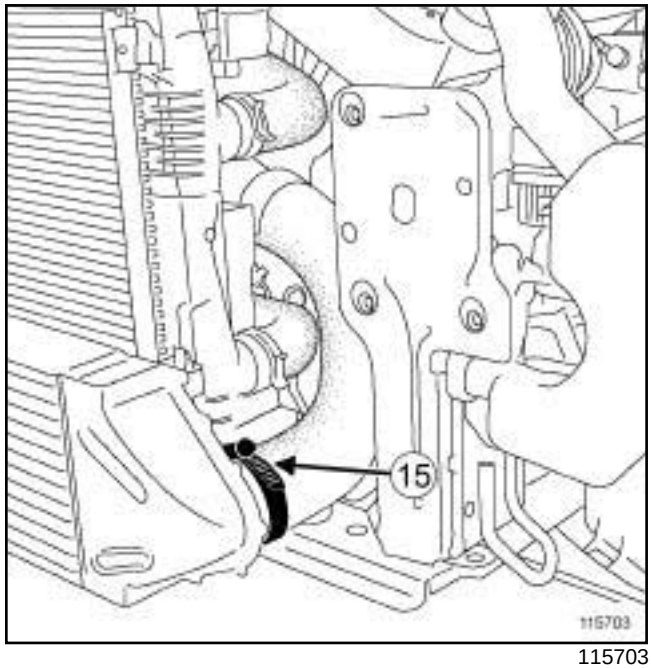

115703

- ❑ Undo the clip (**15**) for the air-air intercooler air inlet pipe at the air-air intercooler end.
- ❑ Detach the pipe using the tool **(Car. 1363)**.
- ❑ Separate the clip on the top pipe of the cooling radiator using the tool **(Mot. 1448)**.
- ❑ Disconnect:
  - the top cooling radiator pipe,
  - the intercooler air inlet pipe at the intercooler end.
- ❑ Remove the « motor-driven fan assembly - cooling radiator - condenser - intercooler » assembly.

B84 or C84 or E84 or K84 or L84, and M9R

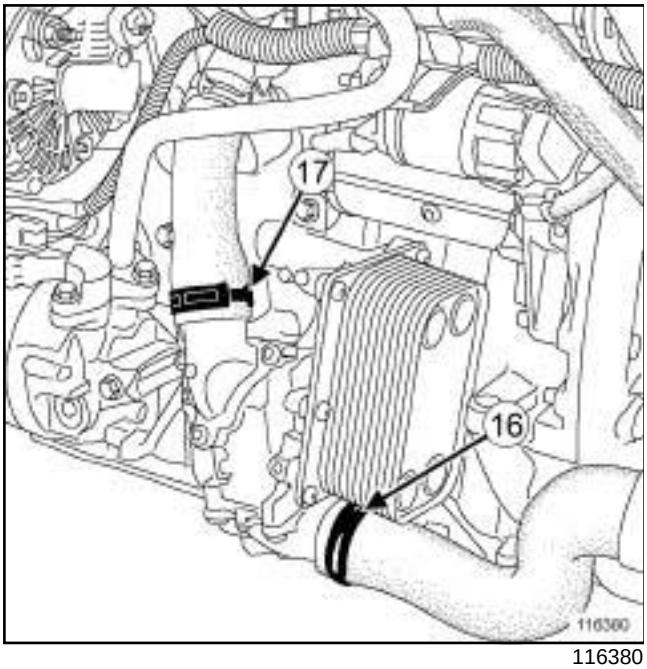

116380

❑ Remove:

- the clip (**16**) on the pipe of the oil filter unit coolant inlet union using the tool **(Mot. 1448)**,
- the clip (**17**) on the pipe of the oil filter unit coolant outlet union using the tool **(Mot. 1448)**.

❑ Disconnect the pipe from the oil filter unit coolant inlet union.

II - OPERATION FOR REMOVAL OF PART CONCERNED

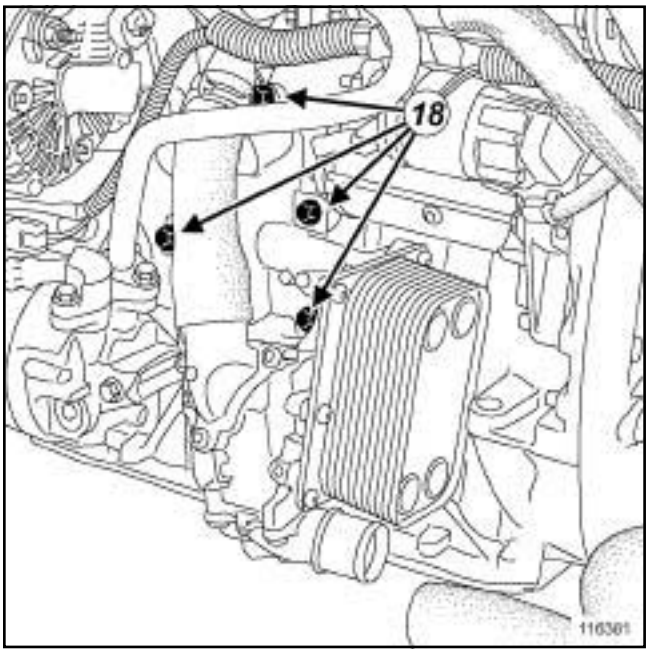

116381

❑ Remove the bolts (**18**) from the oil filter unit.

❑ Disconnect the pipe from the oil filter unit coolant outlet union.

❑ Remove the oil filter unit.

REFITTING

I - REFITTING PREPARATION OPERATION

If replacing the oil filter unit:

❑ Remove the oil pressure sensor (see **10A**, **Engine and cylinder block assembly**, **Oil pressure sensor: Removal - Refitting**, page **10A-71**) from the oil filter unit.

❑ Refit the oil pressure sensor (see **10A**, **Engine and cylinder block assembly**, **Oil pressure sensor: Removal - Refitting**, page **10A-71**) on the new oil filter unit.

❑ Always replace the seal between the oil filter unit and the cylinder block.

B84 or C84 or E84 or K84 or L84, and M9R

❑ Clean:

- the cylinder block gasket face,
- the oil filter unit seal housing if being reused.

WARNING
The face and the housing of the seal must be clean, dry and free from grease (avoid finger marks).

II - REFITTING OPERATION FOR PART CONCERNED

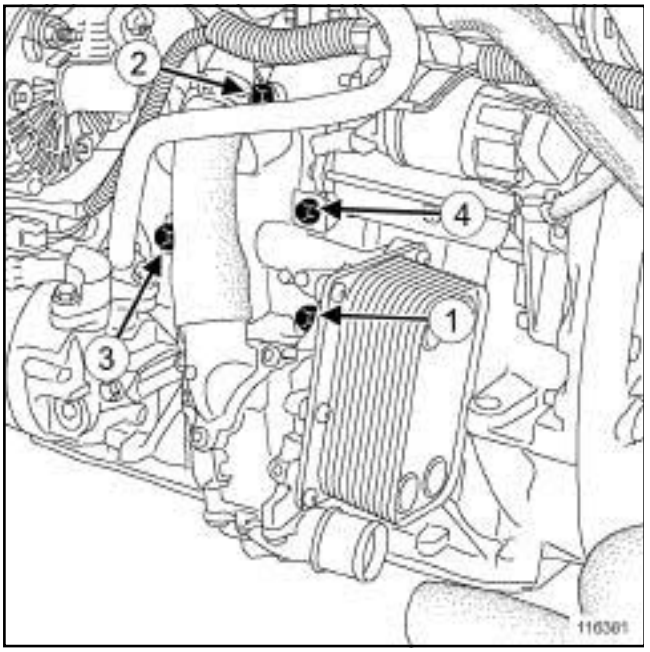

116381

❑ Connect the pipe on the oil filter unit coolant outlet union.

❑ Refit the oil filter unit.

❑ Fit the oil filter unit bolts, without tightening them.

❑ Torque tighten the **oil filter unit bolts (2) and (4) (initial torque) (5 N.m)**.

❑ Tighten to torque and in order the **oil filter unit bolts (25 N.m)**.

III - FINAL OPERATION

❑ Connect the pipe on the oil filter unit coolant inlet union.

❑ Fit:

- the clip on the pipe of the oil filter unit coolant outlet union using the tool **(Mot. 1448)**,
- the clip on the pipe of the oil filter unit coolant inlet union using the tool **(Mot. 1448)**.

❑ Refit the « motor-driven fan assembly - cooling radiator - condenser - intercooler » assembly.

❑ Connect:

- the bottom cooling radiator pipe,
- the top cooling radiator pipe.

❑ Fit:

- the clip on the bottom cooling radiator pipe using the tool **(Mot. 1448)**,
- the clip on the top cooling radiator pipe using the tool **(Mot. 1448)**.

❑ Connect the intercooler air inlet pipe to the intercooler.

❑ Torque tighten the **intercooler air inlet pipe (5.5 N.m)**.

❑ Connect the engine cooling fan assembly connector.

❑ Clip the engine cooling fan assembly wiring.

❑ Connect the engine cooling fan assembly resistor connector.

❑ Remove the blanking plugs from the connecting pipes and the condenser.

WARNING
To avoid any leaks, check that the pipe surface is sound before positioning the new seal. The surface must be clean and scratch free.

❑ Connect:

- the « compressor - condenser » connecting pipe on the condenser side,
- the « condenser - evaporator » connecting pipe on the condenser side.

❑ Refit:

- the bolt of the « compressor - condenser » connecting pipe on the condenser side,
- the bolt of the « condenser - evaporator » connecting pipe on the condenser side.

❑ Connect the connector of the « condenser - evaporator » connecting pipe pressure sensor.

❑ Clip the wiring of the pressure sensor connector onto the fan assembly.

❑ Connect:

- the pipes between the expansion bottle and the cooling radiator on the cooling radiator side,
- the intercooler air outlet pipe on the intercooler.

B84 or C84 or E84 or K84 or L84, and M9R

- ❑ Torque tighten the **intercooler air outlet pipe (5.5 N.m)**.
- ❑ Refit the intercooler air outlet pipe bolt.
- ❑ Refit:
  - the air inlet scoop,
  - the front panel,
  - the windscreen washer filler neck.
- ❑ Torque tighten:
  - the **front end panel lower bolts (44 N.m)**,
  - the **front end panel upper bolts (21 N.m)**.
- ❑ Clip on the air inlet scoop.
- ❑ Connect the screen washer pipes.
- ❑ Refit the front end panel clips.
- ❑ Fit the bonnet opening cable.
- ❑ Connect the engine accessories unit connectors.
- ❑ Refit:
  - the engine accessories unit cover,
  - the front bumper (see **Front bumper: Removal - Refitting**) (55A, Exterior protection),
  - the oil filter (see **10A**, **Engine and cylinder block assembly**, **Oil filter: Removal - Refitting**, page **10A-53**) ,
  - the engine undertray.
- ❑ Connect the battery (see **Battery: Removal - Refitting**) (80A, Battery).
- ❑ Refit the engine cover.
- ❑ Perform the following operations:
  - fill the refrigerant circuit using a **refrigerant charging station** (see **Coolant circuit Draining - Refilling**) (62A, Air conditioning).
  - fill and bleed the cooling circuit (see **19A**, **Cooling**, **Cooling circuit: Draining - Refilling**, page **19A-15**) ,
  - adjust the headlights (see **Halogen headlight: Adjustment**) (80B, Headlights) or (see **Xenon headlights: Adjustment**) (80C, Xenon bulbs).

F9Q

Essential special tooling	
Ms. 583	Hose clamp pliers.
Mot. 1448	Long nose pliers for hose clips.

Tightening torques ▽	
oil-coolant heat exchanger nipple	**60 N.m**

REMOVAL

I - REMOVAL PREPARATION OPERATION

- ❑ Position the vehicle on a two-post lift (see **Vehicle: Towing and lifting**) (02A, Lifting equipment).
- ❑ Disconnect the battery (see **Battery: Removal - Refitting**) (80A, Battery).
- ❑ Remove:
  - the engine undertray,
  - the oil filter (see **10A**, **Engine and cylinder block assembly**, **Oil filter: Removal - Refitting**, page **10A-53**) .
- ❑ Fit the tool **(Ms. 583)** onto the pipes of the oil-coolant heat exchanger.

II - OPERATION FOR REMOVAL OF PART CONCERNED

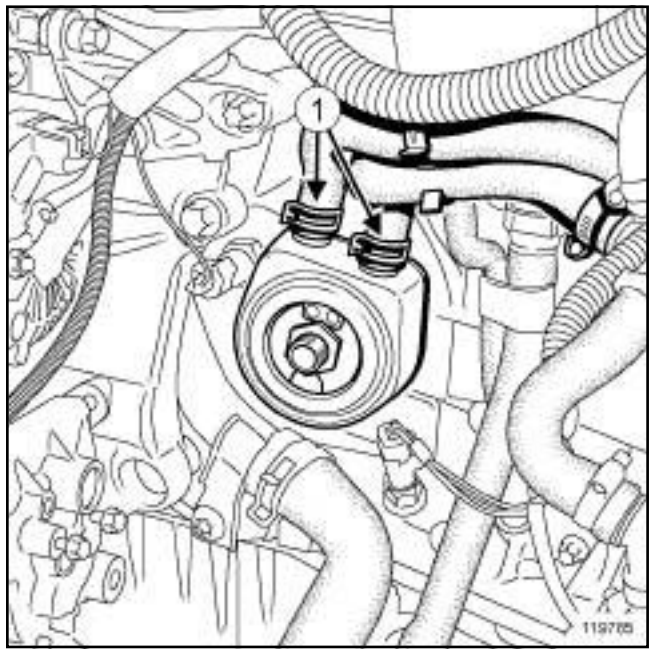

119785

- ❑ Separate the clips on the pipes of the oil-coolant heat exchanger using the tool **(Mot. 1448)**.
- ❑ Disconnect the pipes of the oil-coolant heat exchanger.

WARNING

Prepare for the flow of fluid, and protect the surrounding components.

F9Q

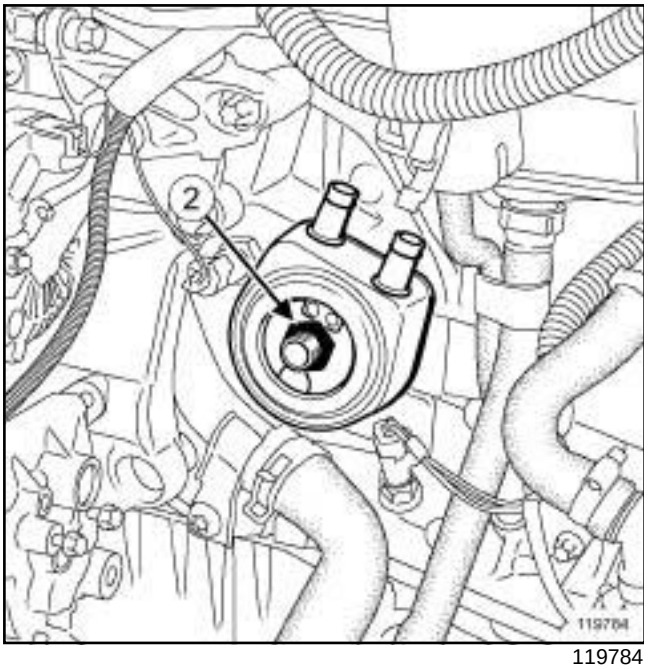

119784

❑ Remove:

- the nipple (**2**) from the oil-coolant heat exchanger,
- the oil-coolant heat exchanger.

> Note:
>
> Mark the position of the oil-coolant heat exchanger before removing it.

REFITTING

I - REMOVAL PREPARATION OPERATION

❑ Clean the gasket faces.

❑ **parts always to be replaced: coolant-engine oil heat exchanger seal on the cylinder block (10,05, 05,12)**.

II - REFITTING OPERATION FOR PART CONCERNED

❑ Refit:

- the oil-coolant heat exchanger with a new seal, respecting its original position,
- the oil-coolant heat exchanger nipple.

❑ Torque tighten the **oil-coolant heat exchanger nipple (60 N.m)**.

❑ Connect the pipes to the oil-coolant heat exchanger.

❑ Position the clips on the pipes of the oil-coolant heat exchanger.

III - FINAL OPERATION

❑ Remove the tool **(Ms. 583)** from the pipes of the oil-coolant heat exchanger.

❑ Refit the oil filter with a new seal (see **10A**, **Engine and cylinder block assembly**, **Oil filter: Removal - Refitting**, page **10A-53**) .

❑ Connect the battery (see **Battery: Removal - Refitting**) (80A, Battery).

❑ Fill and bleed the cooling system (see **19A**, **Cooling**, **Cooling circuit: Draining - Refilling**, page **19A-15**) .

❑ Check that no engine oil or coolant is leaking from the oil-coolant heat exchanger.

❑ Refit the engine undertray.

B84 or C84 or E84 or K84 or L84, and M9R

The coolant - oil heat exchanger is not sold separately in the Parts Department, to replace it, it is necessary to replace the oil filter unit (see **10A**, **Engine and cylinder block assembly**, **Oil filter unit: Removal - Refitting**, page **10A-59**) .

B84 or C84 or G84 or S84, and K9K, and 724 or 728 or 729 or 732 or 734

Tightening torques ▽	
oil-water heat exchanger bolt	**39 N.m**
oil filter support bolt	**28 N.m**

IMPORTANT
Wear leaktight gloves (Nitrile type) for this operation.

IMPORTANT
Wear heat protective gloves during the operation.

IMPORTANT
The circuits are designed to be pressurised, so be careful at high temperatures (risk of serious burns).

Do not remove the cap from the expansion bottle while the engine is hot.

Take care when carrying out a repair under the bonnet, as the radiator fan(s) may start to operate without warning.

Do not open the bleed screw(s) with the engine running.

WARNING
Prepare for the flow of fluid, and protect the surrounding components.

REMOVAL

I - REMOVAL PREPARATION OPERATION

❏ Position the vehicle on a two-post lift (see **Vehicle: Towing and lifting**) (02A, Lifting equipment).

❏ Remove:

- the engine cover,
- the engine undertray bolts,
- the engine undertray.

❏ Drain the cooling system (see **19A**, **Cooling**, **Cooling circuit: Draining - Refilling**, page **19A-15**) .

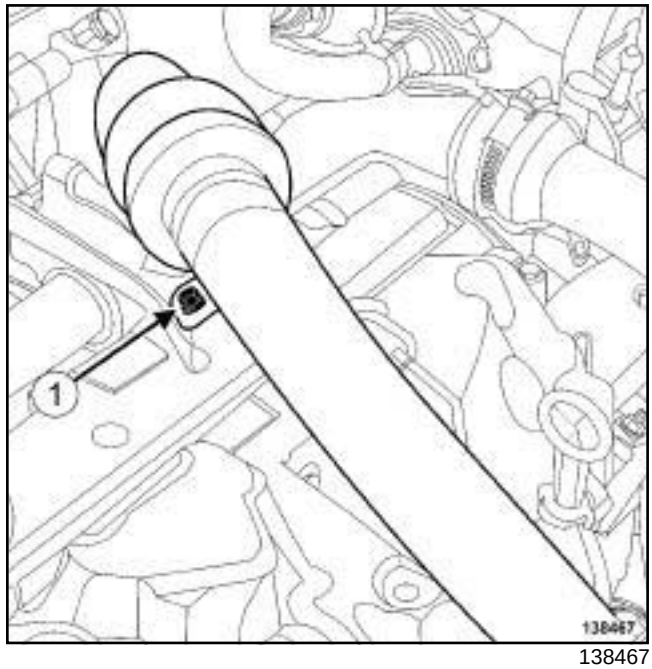

138467

❏ Remove the bolt (**1**) on the intercooler air inlet pipe.

123299

❏ Pull the clip (**2**) from the intercooler inlet air pipe.

❏ Disconnect the intercooler air inlet pipe from the turbocharger.

❏ Move the air pipe to one side.

B84 or C84 or G84 or S84, and K9K, and 724 or 728 or 729 or 732 or 734

II - OPERATION FOR REMOVAL OF PART CONCERNED

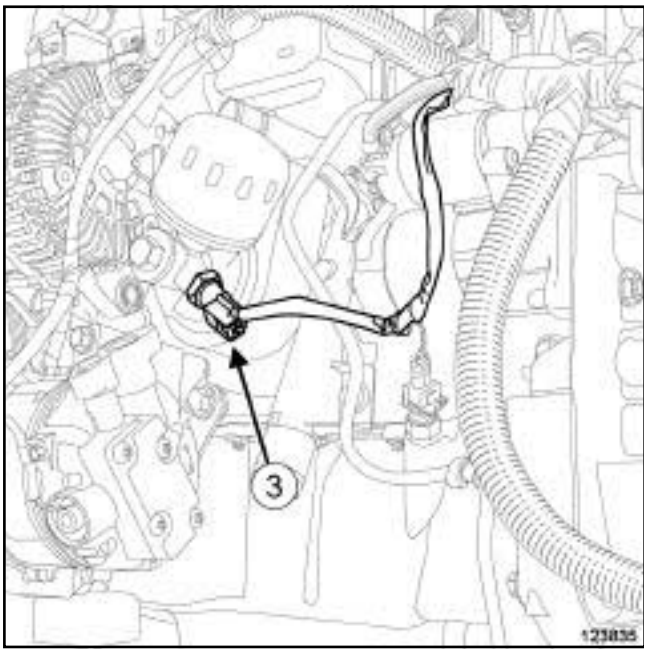

123835

❑ Disconnect the oil pressure sensor connector (**3**) .

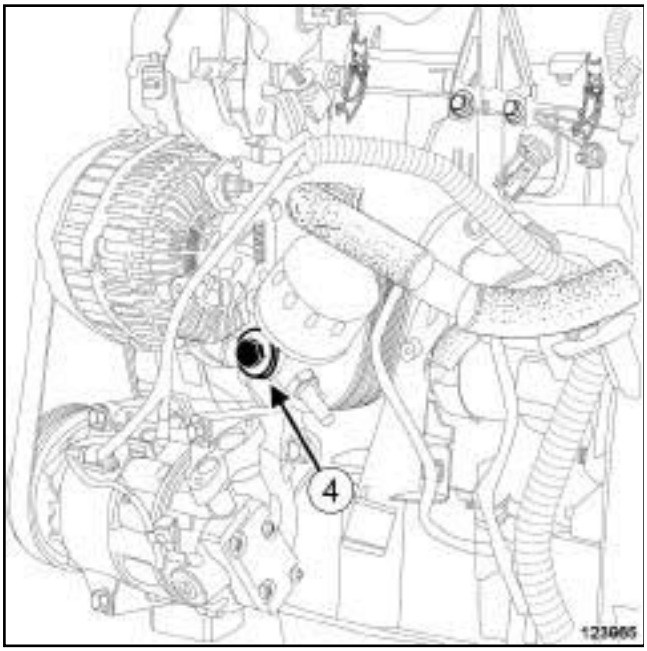

123965

❑ Remove:

- the bolt (**4**) from the oil filter support,
- the oil filter holder.

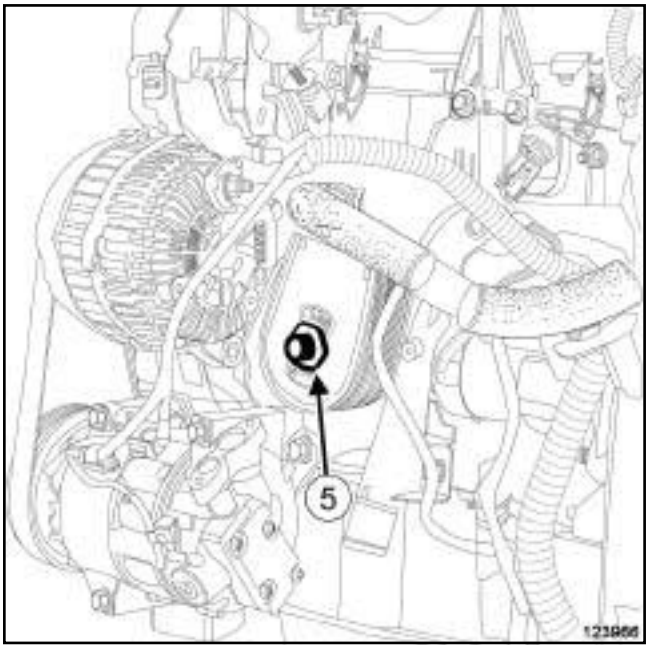

123966

❑ Remove:

- the bolt (**5**) from the oil-water heat exchanger,
- the oil-water heat exchanger.

REFITTING

I - REFITTING PREPARATION OPERATION

❑ **parts always to be replaced: coolant-engine oil heat exchanger coolant outlet union seal (10,06, 01,20)**.

❑ **parts always to be replaced: coolant-engine oil heat exchanger seal on the cylinder block (10,05, 05,12)**.

❑ Using a clean cloth, clean up any oil and coolant runs on the cylinder block and on the oil filter support.

❑ Use **SURFACE CLEANER** (see **Vehicle: Parts and consumables for repair**) (04B, Consumables - Products) to degrease the joint mating face:

- on the cylinder block for the oil-water heat exchanger,
- on the oil-water heat exchanger for the oil filter support.

B84 or C84 or G84 or S84, and K9K, and 724 or 728 or 729 or 732 or 734

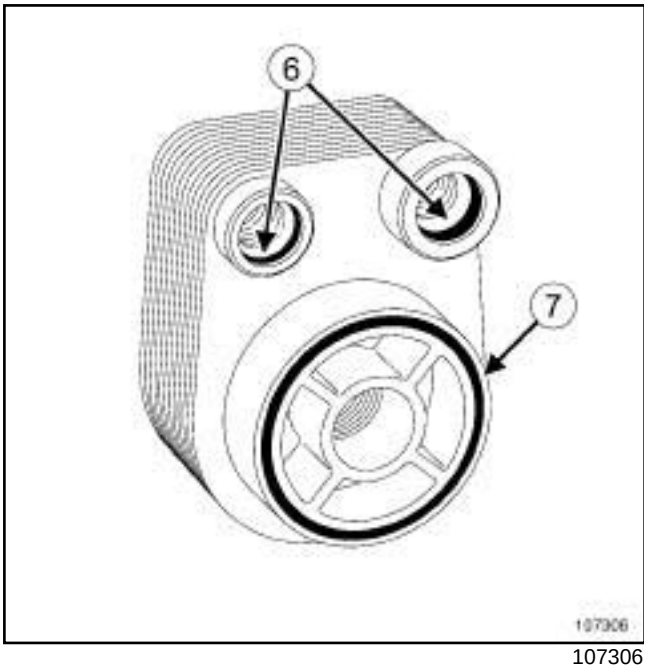

107306

- Refit new seals (**6**) and (**7**) on the oil-water heat exchanger.
- Apply soapy water to the two seals (**6**) in contact with the coolant pump inlet pipe.

II - REFITTING OPERATION FOR PART CONCERNED

- Apply two drops of **HIGH STRENGTH THREAD LOCK** (see **Vehicle: Parts and consumables for repair**) (04B, Consumables - Products) to the oil-coolant heat exchanger bolt.
- Refit the oil-water heat exchanger.
- Torque tighten the **oil-water heat exchanger bolt (39 N.m)**.
- Refit the oil filter holder.
- Torque tighten the **oil filter support bolt (28 N.m)**.
- Connect the oil pressure sensor connector.

III - FINAL OPERATION

- Fit the intercooler air inlet pipe.
- Connect the intercooler air inlet pipe on the turbocharger.
- Clip on the clip of the intercooler air inlet pipe.
- Refit the bolt on the intercooler air inlet pipe.
- Fill and bleed the cooling system (see **19A**, **Cooling**, **Cooling circuit: Draining - Refilling**, page **19A-15**) .
- Refit:
  - the engine undertray,
  - the engine cover.
- Check the engine oil level before starting.

M9R

Essential special tooling	
Mot. 1495-01	22 mm socket for removing/ refitting oxygen sensors.

Tightening torques ▽	
oil pressure sensor	**40 N.m**
front end panel upper bolts	**21 Nm**
front end panel lower bolts	**44 Nm**

REMOVAL

I - REMOVAL PREPARATION OPERATION

❑ Position the vehicle on a two-post lift (see **Vehicle: Towing and lifting**) (02A, Lifting equipment).

❑ Disconnect the battery (see **Battery: Removal - Refitting**) (80A, Battery),

❑ Remove:

- the engine covers,
- the engine undertray,
- the front bumper (see **Front bumper: Removal - Refitting**) (55A, Exterior protection).

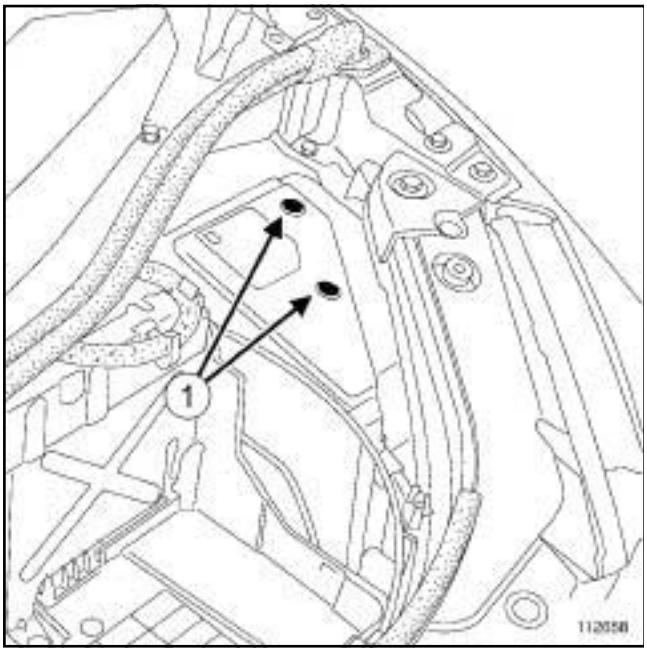

112658

❑ Remove:

- the engine accessories unit cover bolts (**1**) ,
- the engine accessories unit cover.

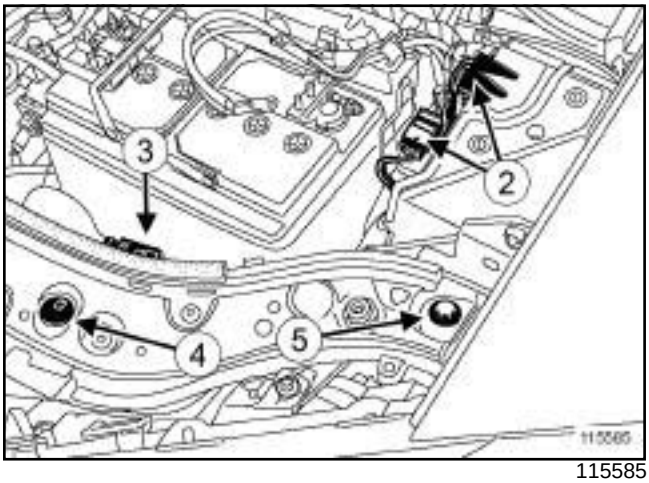

115585

❑ Disconnect the connectors (**2**) from the engine accessories unit.

❑ Unfasten the bonnet opening cable (**3**) .

❑ Remove:

- the front end panel clips (**4**) ,
- the front end panel upper bolts (**5**) .

❑ Disconnect the screen washer pipes.

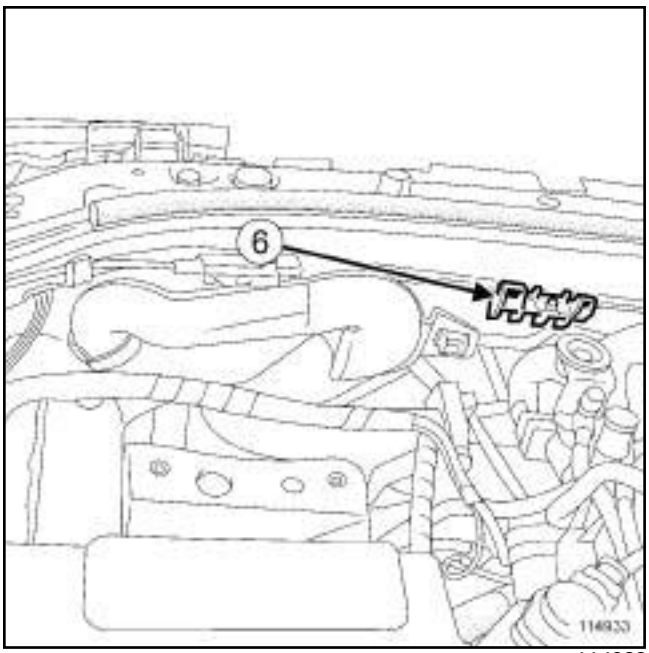

114933

❑ Unclip the air inlet scoop (**6**) .

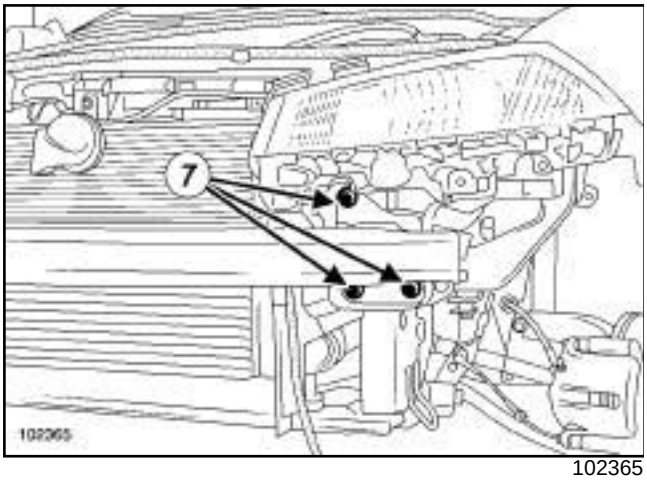

102365

❑ Remove:

- the front end panel lower bolts (**7**) ,
- the front of the vehicle.

II - OPERATION FOR REMOVAL OF PART CONCERNED

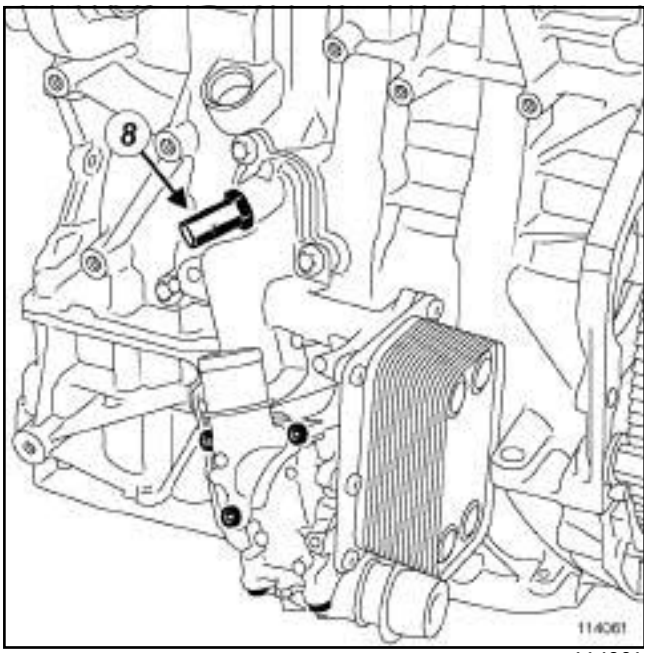

114061

❑ Disconnect the oil pressure sensor connector (**8**) .

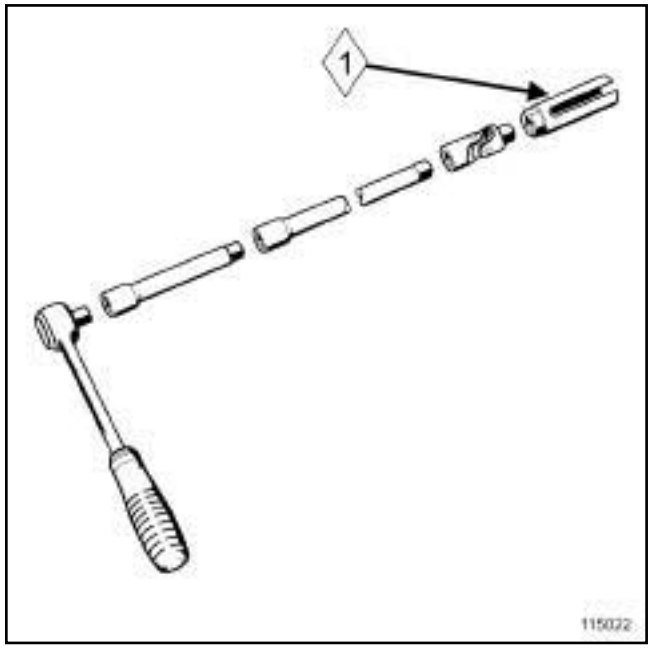

115022

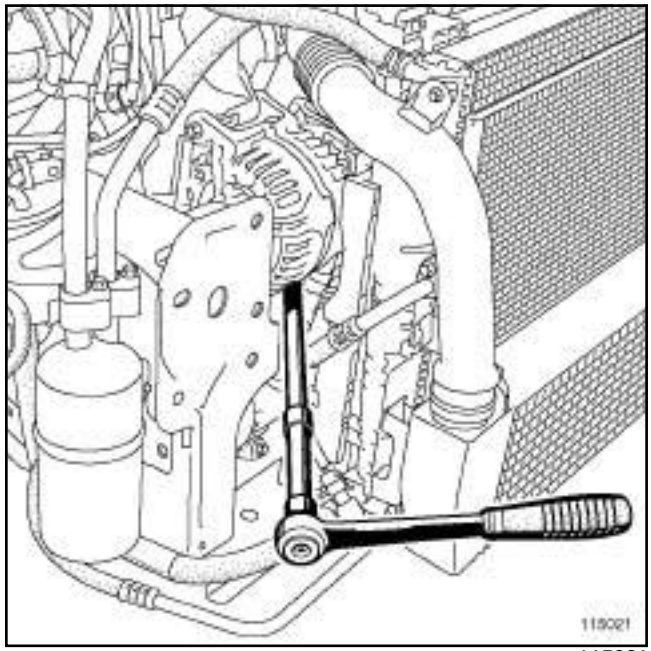

115021

❑ Remove the oil pressure sensor using the **(Mot. 1495-01)** (**1**) .

Note:

Be careful not to damage the air conditioning compressor connector.

M9R

REFITTING

I - REFITTING OPERATION FOR PART CONCERNED

- ❑ Refit the oil pressure sensor.
- ❑ Torque tighten the **oil pressure sensor (40 N.m)** using the tool **(Mot. 1495-01)**.
- ❑ Connect the oil pressure sensor connector.

II - FINAL OPERATION

- ❑ Refit:
  - the front panel,
  - the front end panel upper bolts,
  - the front end panel lower bolts.
- ❑ Tighten to torque:
  - the **front end panel upper bolts (21 Nm)**,
  - the **front end panel lower bolts (44 Nm)**.
- ❑ Clip on the air inlet scoop.
- ❑ Connect the screen washer pipes.
- ❑ Fit the bonnet opening cable.
- ❑ Connect the engine accessories unit connectors.
- ❑ Refit:
  - the front end panel clips,
  - the engine accessories unit cover,
  - the front bumper (see **Front bumper: Removal - Refitting**) (55A, Exterior protection),
  - the engine undertray,
  - the engine covers.
- ❑ Connect the battery (see **Battery : Removal - Refitting**) (80A, Battery).

F9Q

Essential special tooling	
Mot. 1495-01	22 mm socket for removing/ refitting oxygen sensors.

Tightening torques ▽	
oil pressure sensor	**32 Nm**

REMOVAL

I - REMOVAL PREPARATION OPERATION

❑ Position the vehicle on a two-post lift (see **Vehicle: Towing and lifting**) (02A, Lifting equipment).

❑ Remove the engine undertray.

II - OPERATION FOR REMOVAL OF PART CONCERNED

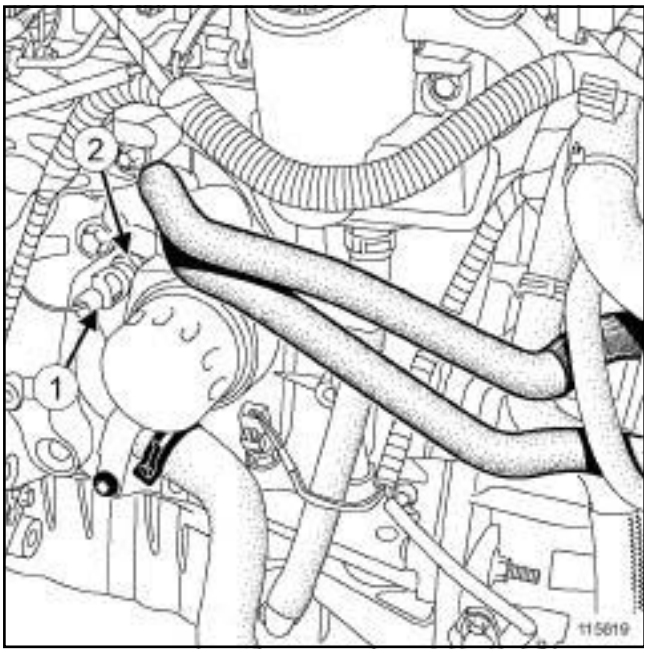

115619

❑ Disconnect the oil pressure sensor connector (**1**) .

❑ Remove the oil pressure sensor (**2**) using the **(Mot. 1495-01)**.

REFITTING

I - REFITTING OPERATION FOR PART CONCERNED

❑ Refit the oil pressure sensor.

❑ Use the **(Mot. 1495-01)** and tighten to torque the **oil pressure sensor (32 Nm)**.

II - FINAL OPERATION

❑ Connect the oil pressure sensor.

❑ Refit the engine undertray.

K4J – K4M

Essential special tooling	
Mot. 1495	22 mm oxygen sensor removal/refitting socket - 1/2" square drive and a 24 mm Allen key.
Mot. 1495-01	22 mm socket for removing/ refitting oxygen sensors.

Tightening torques ▽	
oil pressure sensor	**32 N.m**

REMOVAL

I - OPERATION FOR REMOVAL OF PART CONCERNED

❑ Remove the front engine cover.

II - OPERATION FOR REMOVAL OF PART CONCERNED

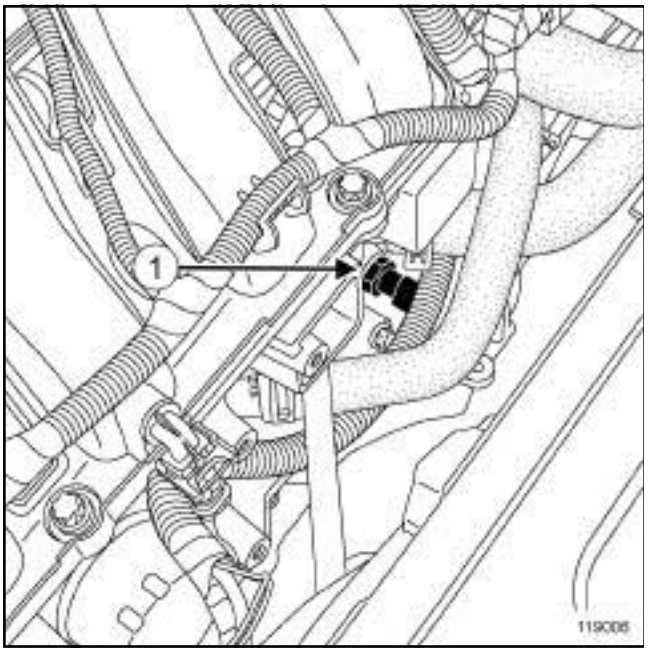

119006

❑ Disconnect the oil pressure sensor connector.

❑ Remove the oil pressure sensor (**1**) using the **(Mot. 1495)** or **(Mot. 1495-01)**.

REFITTING

I - REFITTING OPERATION FOR PART CONCERNED

❑ Refit the oil pressure sensor.

❑ Torque tighten the **oil pressure sensor (32 N.m)** using the **(Mot. 1495)** or **(Mot. 1495-01)**.

❑ Connect the oil pressure sensor connector.

II - FINAL OPERATION

❑ Refit the engine cover.

B84 or C84 or G84 or S84, and K9K

REMOVAL

I - REMOVAL PREPARATION OPERATION

❏ Position the vehicle on a two-post lift (see **Vehicle: Towing and lifting**) (02A, Lifting equipment).

❏ Remove:

- the engine undertray bolts,
- the engine undertray.

II - OPERATION FOR REMOVAL OF PART CONCERNED

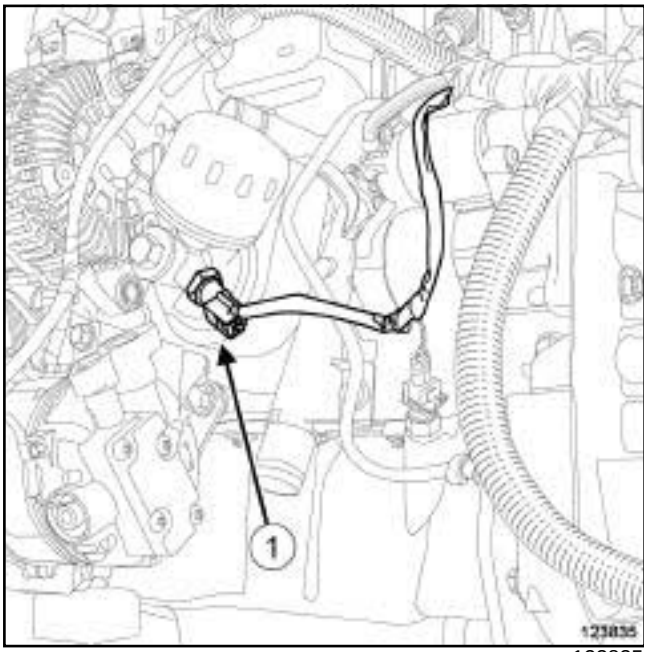

123835

❏ Disconnect the oil pressure sensor connector (**1**) .

❏ Remove the oil pressure sensor.

REFITTING

I - REFITTING PREPARATION OPERATION

❏ **parts always to be replaced: Oil pressure sensor (10,05,04,02)**.

❏ Wipe any oil run-off with a cloth.

II - REFITTING OPERATION FOR PART CONCERNED

❏ Refit a new oil pressure sensor.

❏ Connect the oil pressure sensor connector.

III - FINAL OPERATION

❏ Refit the engine undertray.

B84 or C84 or E84 or K84 or L84, and M9R

REMOVAL

I - REMOVAL PREPARATION OPERATION

- ❑ Position the vehicle on a two-post lift (see **Vehicle: Towing and lifting**) (MR 364, 02A, Lifting equipment).
- ❑ Remove the front right-hand wheel (see **Wheel: Removal - Refitting**) (MR 364, 35A, Wheels and tyres).
- ❑ Move the heat insulating material away from the oil level sensor.

II - OPERATION FOR REMOVAL OF PART CONCERNED

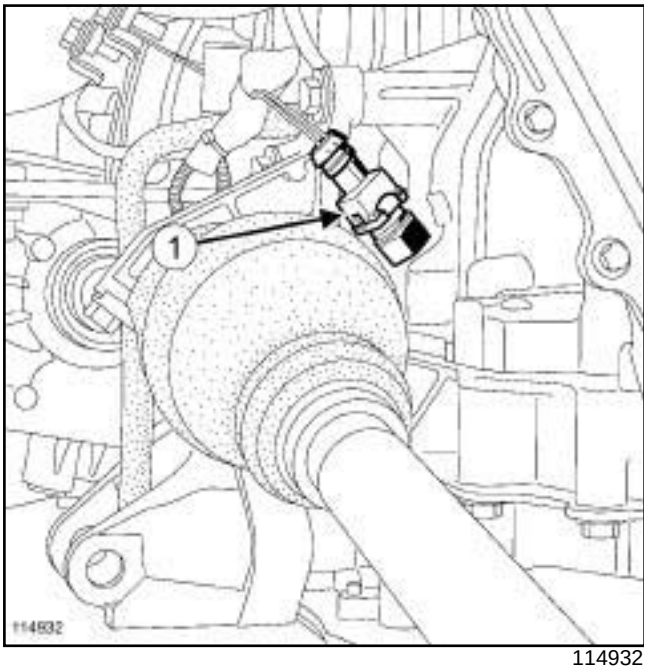

114932

- ❑ Disconnect the connector from the oil level sensor (**1**) .
- ❑ Remove the oil level sensor.

REFITTING

I - REFITTING OPERATION FOR PART CONCERNED

- ❑ Refit the oil level sensor.
- ❑ Connect the oil level sensor.

II - FINAL OPERATION.

- ❑ Fit the heat insulating material around the oil level sensor.
- ❑ Refit the front right-hand wheel (see **Wheel: Removal - Refitting**) (MR 364, 35A, Wheels and tyres).

F9Q

REMOVAL

I - REMOVAL PREPARATION OPERATION

- ❑ Position the vehicle on a two-post lift (see **Vehicle: Towing and lifting**) (02A, Lifting).
- ❑ Disconnect the battery (see **Battery: Removal - Refitting**) (80A, Battery).
- ❑ Remove the engine undertray.

II - OPERATION FOR REMOVAL OF PART CONCERNED

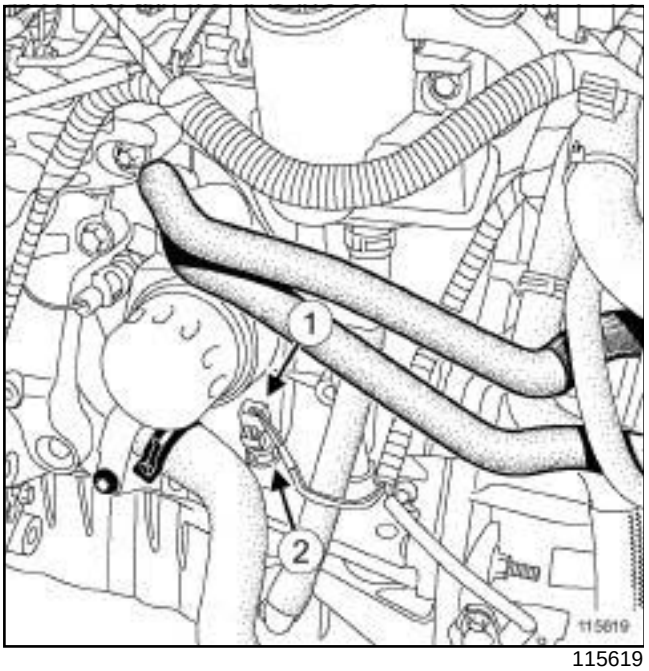

115619

- ❑ Disconnect the connector (**1**) from the oil level sensor.
- ❑ Remove the oil level sensor (**2**) using a ring spanner.

REFITTING

I - REFITTING OPERATION FOR PART CONCERNED

- ❑ Refit the oil level sensor.
- ❑ Connect the connector to the oil level sensor.

II - FINAL OPERATION

- ❑ Refit the engine undertray.
- ❑ Connect the battery (see **Battery : Removal - Refitting**) (80A, Battery).

B84 or C84 or G84 or S84, and K9K

REMOVAL

I - REMOVAL PREPARATION OPERATION

❏ Position the vehicle on a two-post lift (see **Vehicle: Towing and lifting**) (02A, Lifting equipment).

❏ Remove:

- the engine undertray bolts,
- the engine undertray.

II - OPERATION FOR REMOVAL OF PART CONCERNED

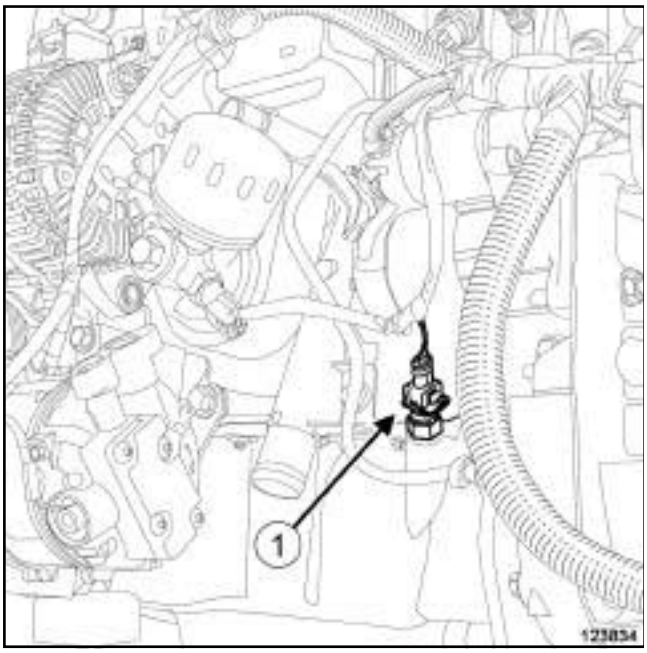

123834

❏ Disconnect the connector (**1**) from the oil level sensor.

❏ Remove the oil level sensor .

REFITTING

I - REFITTING PREPARATION OPERATION

❏ Wipe any oil run-off with a cloth.

II - REFITTING OPERATION FOR PART CONCERNED

❏ Refit the oil level sensor.

❏ Connect the connector to the oil level sensor.

III - FINAL OPERATION

❏ Refit the engine undertray.

B84 or C84 or G84 or S84, and F4R or F9Q or K4J or K4M or K9K

Tightening torques ▽	
oil pump bolts	**25 Nm**

REMOVAL

I - REMOVAL PREPARATION OPERATION

❑ Position the vehicle on a two-post lift (see **Vehicle: Towing and lifting**) (MR 364, 02A, Lifting equipment).

❑ Disconnect the battery (see **Battery: Removal - Refitting**) (MR 364, 80A, Battery).

❑ Remove the engine undertray.

❑ Drain the engine oil (see **10A**, **Engine and cylinder block assembly**, **Engine oil: Draining - Refilling**, page **10A-43**) .

❑ Remove the sump (see **10A**, **Engine and cylinder block assembly**, **Sump: Removal - Refitting**, page **10A-6**) .

II - OPERATION FOR REMOVAL OF PART CONCERNED

Example for F9Q engine

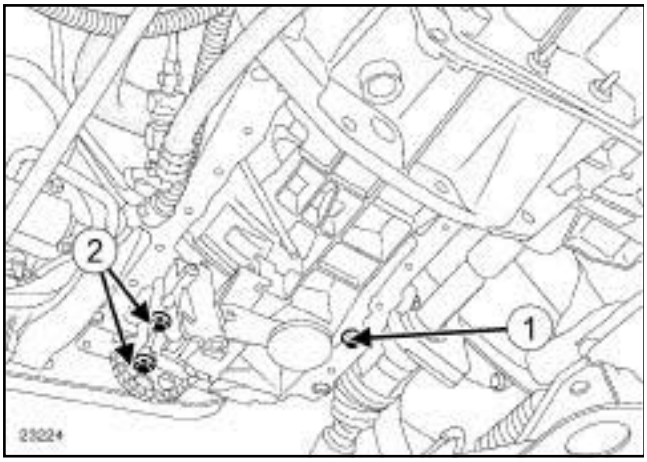

23224

❑ Remove:

- the oil splash plate bolt (**1**) ,
- the oil splash plate,
- the oil pump bolts (**2**) ,
- the oil pump.

REFITTING

I - REFITTING OPERATION FOR PART CONCERNED

❑ Refit:

- the oil pump,
- the oil pump bolts,
- the oil splash plate,
- the oil splash plate bolt.

❑ Torque tighten the **oil pump bolts (25 Nm)**.

II - FINAL OPERATION.

❑ Refit the sump (see **10A**, **Engine and cylinder block assembly**, **Sump: Removal - Refitting**, page **10A-6**) .

❑ Top up the engine oil (see **10A**, **Engine and cylinder block assembly**, **Engine oil: Draining - Refilling**, page **10A-43**) .

❑ Connect the battery (see **Battery : Removal - Refitting**) (MR 364, 80A, Battery).

B84 or C84, and F4R, and 774

Tightening torques ▽	
oil pump mounting bolts	**25 Nm**
battery cover bolts	**4 Nm**

REMOVAL

❑ Position the vehicle on a two-post lift (see **Vehicle: Towing and lifting**) (MR364, 02A, Lifting equipment).

> **IMPORTANT**
> During this operation, secure the vehicle on the lift with a strap to prevent it from unbalancing.

❑ Disconnect the battery (see **Battery: Removal - Refitting**) (MR 364, 80A, Battery).

❑ Remove the engine undertrays

❑ Drain the engine.

❑ Remove the sump (see **10A**, **Engine and cylinder block assembly**, **Sump: Removal - Refitting**, page **10A-6**) .

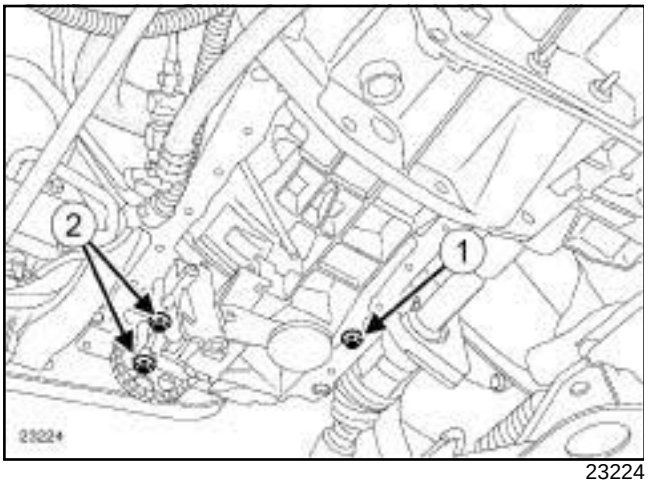

23224

❑ Remove:

- the oil splash plate and the bolt (**1**) ,
- the oil pump bolts (**2**) ,
- the oil pump.

REFITTING

❑ Proceed in the reverse order to removal.

❑ Torque tighten the **oil pump mounting bolts (25 Nm)**.

❑ Refit the sump (see **10A**, **Engine and cylinder block assembly**, **Sump: Removal - Refitting**, page **10A-6**) .

❑ Refill the engine oil.

❑ Connect the battery (see **Battery : Removal - Refitting**) (MR 364, 80A, Battery).

❑ Torque tighten the **battery cover bolts (4 Nm)**.

B84 or C84 or E84 or K84 or L84, and M9R

Tightening torques ▽	
oil pump bolts on the cylinder block (initial torque)	**5 Nm**
oil pump bolts on the cylinder block	**25 Nm**
oil pump bolt on the anti-splash plate	**10 Nm**
strainer bolts (4), (5)	**10 Nm**

REMOVAL

I - REMOVAL PREPARATION OPERATION

❑ Position the vehicle on a two-post lift (see **Vehicle: Towing and lifting**) (MR 364, 02A, Lifting equipment).

❑ Disconnect the battery (see **Battery: Removal - Refitting**) (MR 364, 80A, Battery).

❑ Remove the sump (see **10A**, **Engine and cylinder block assembly**, **Sump: Removal - Refitting**, page **10A-6**) .

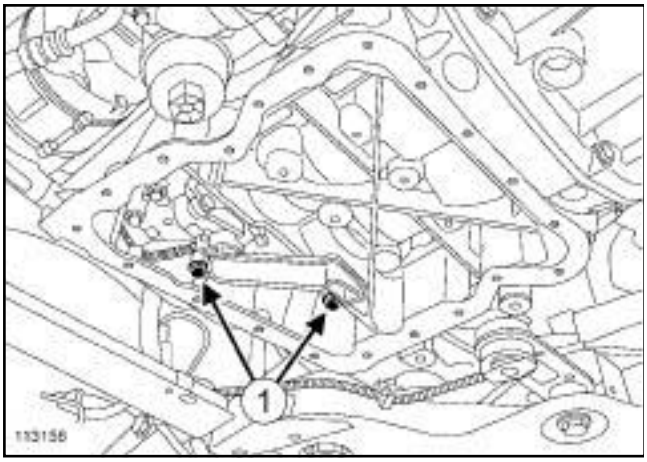

113156

❑ Remove:

- the bolts (**1**) from the strainer,
- the strainer.

II - OPERATION FOR REMOVAL OF PART CONCERNED

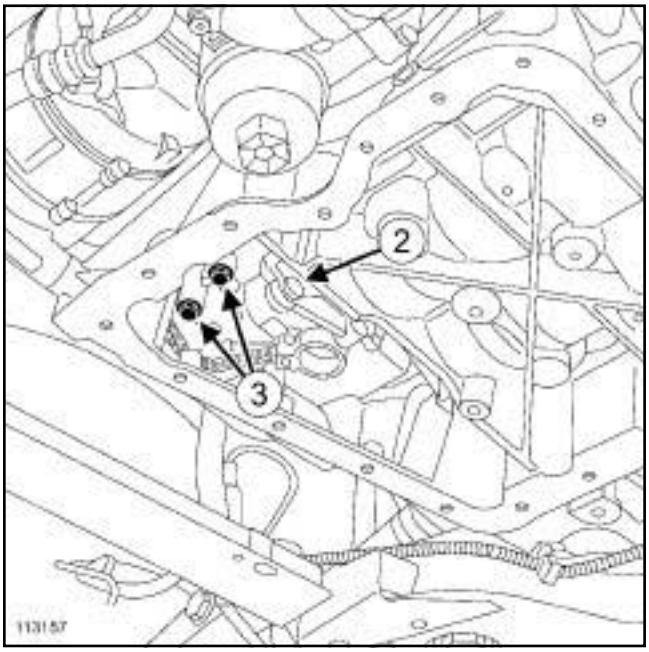

113157

❑ Remove:

- the oil pump bolt (**2**) from the anti-splash plate,
- the oil pump bolts (**3**) from the cylinder block,
- the oil pump.

REFITTING

I - REMOVAL PREPARATION OPERATION

❑ If necessary, use a locally produced hook to fit the oil pump chain to the oil pump pinion.

II - REFITTING OPERATION FOR PART CONCERNED

❑ Without tightening, fit:

- the oil pump bolt on the oil splash plate,
- the oil pump bolts on the cylinder block.

❑ Tighten to torque the **oil pump bolts on the cylinder block (initial torque) (5 Nm)**.

❑ Torque tighten:

- the **oil pump bolts on the cylinder block (25 Nm)**,
- the **oil pump bolt on the anti-splash plate (10 Nm)**,

B84 or C84 or E84 or K84 or L84, and M9R

III - FINAL OPERATION.

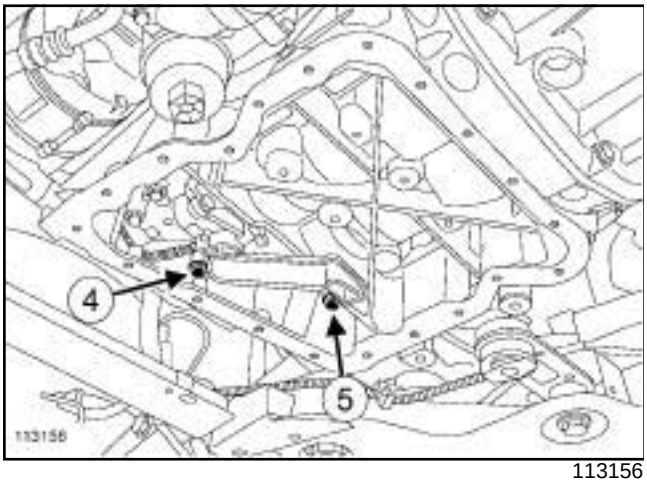

113156

- ❑ Replace the oil strainer O-ring.
- ❑ Refit the oil pump strainer.
- ❑ In order, fit without tightening the strainer bolts (**4**) , (**5**) .
- ❑ Tighten to torque and in order the **strainer bolts (4), (5) (10 Nm)**.
- ❑ Refit:
  - the sump (see **10A**, **Engine and cylinder block assembly**, **Sump: Removal - Refitting**, page **10A-6**) ,
  - the engine undertray,
  - the engine undertray bolts.
- ❑ Connect the battery (see **Battery : Removal - Refitting**) (MR 364, 80A, Battery).
- ❑ Start the engine and wait until the engine oil warning light goes out.
- ❑ Check the engine oil level.

Oil pressure: Check

F4R or F9Q or K4J or K4M or K9K or M9R

Essential special tooling	
Mot. 836-05	Oil pressure gauge kit.
Mot. 1495-01	22 mm socket for removing/ refitting oxygen sensors.

Oil pressure tables:

Engine	Engine suffix	Minimum oil pressure (bar)		Maximum oil pressure (bar)
		Idling speed	4000 rpm	4000 rpm
K4J	-	0.5	3.1	4.4
K4M	-	0.5	3.1	4.4
F4R	770 - 771	0.5	2.2	4.0
F4R	776	0.4	2.0	4.0
F4R	774	0.5	3.72	5.5
K9K	-	0.8	3.4	5.2

Engine	Engine suffix	Minimum oil pressure (bar)		Maximum oil pressure (bar)
		Idling speed	3000 rpm	3000 rpm
F9Q	800 - 808 -812	0.9	4.5	5.8
F9Q	803 - 804 - 816 - 818	1.0	4.5	5.9
M9R	-	1.4	4.7	5.9

End pieces to be used:

Engine	End pieces
K4J	E + C + F
K4M	E + C + F
F4R	B + F
K9K	E + C + F
F9Q	B + F
M9R	C + F

WARNING

Always check the oil level using the dipstick.

Do not exceed the maximum level on the dipstick (could destroy the engine).

Correct the engine oil level if necessary before delivering the vehicle to the customer.

Note:

When topping up the engine oil, always leave at least **10 minutes** before checking the level with a dipstick.

F4R or F9Q or K4J or K4M or K9K or M9R

CHECKING

- ❑ Position the vehicle on a two-post lift (see **Vehicle: Towing and lifting**) (02A, Lifting equipment).
- ❑ Remove:
  - the engine undertray bolts,
  - the engine undertray,
  - the oil pressure sensor (see **10A**, **Engine and cylinder block assembly**, **Oil pressure sensor: Removal - Refitting**, page **10A-71**) .

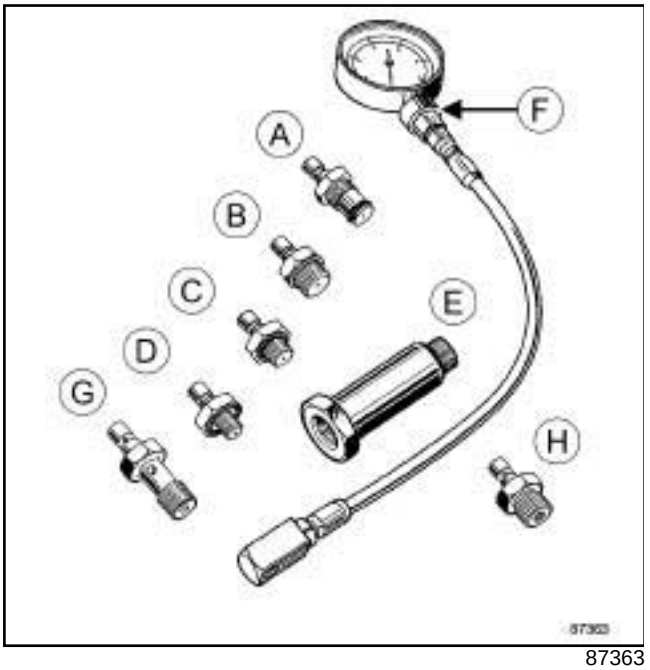

87363

- ❑ In place of the oil pressure sensor, fit the **(Mot. 836-05)** with suitable adapters using the **(Mot. 1495-01)** or a **22 mm** long socket.
- ❑ Start the engine.
- ❑ Monitor the engine oil pressure as the oil temperature rises (approximately **80°C** or the first time the engine cooling fan is activated); it should not be less than the pressure at idle speed.
- ❑ If the oil pressure is lower than the pressure at idle speed, check that:
  - the oil filter is not clogged,
  - dirt or swarf is not present in the engine oil,
  - the oil pump is in good condition and being correctly driven.
- ❑ Check the oil pressure in comparison with the values given in the table above.
- ❑ Switch off the engine.
- ❑ Remove the **(Mot. 836-05)** and its adapters.
- ❑ Refit the oil pressure sensor (see **10A**, **Engine and cylinder block assembly**, **Oil pressure sensor: Removal - Refitting**, page **10A-71**) .
- ❑ Wipe any oil run-off with a cloth.
- ❑ Wait at least **10 minutes**.
- ❑ Check the oil level using the dipstick.
- ❑ Top up the oil level if necessary (see **Engine oil: Specifications**) (Technical Note 6013A, 04A, Lubricants).
- ❑ Start the vehicle and check that there are no oil leaks at the oil pressure sensor.
- ❑ Refit the engine undertray.

B84 or C84 or G84 or S84, and K4J – B84 or C84 or G84 or S84, and K4M

Tightening torques ▽	
multifunction support bolts	**44 Nm**
multifunction support bolt on the cylinder block	**21 Nm**

REMOVAL

❑ Position the vehicle on a two-post lift (see **Vehicle: Towing and lifting**) (MR 364, 02A, Lifting equipment).

❑ Remove the engine protectors.

❑ Disconnect the battery (see **Battery: Removal - Refitting**) (MR 364, 80A, Battery).

❑ Remove:

- the front wheels,
- the right-hand and left-hand wheel arch liners,
- the engine undertray,
- the front bumper (see **Front bumper: Removal - Refitting**) (MR 365, 55A, Exterior protection),
- the accessories belt (see **11A**, **Top and front of engine**, **Accessories belt: Removal - Refitting**, page **11A-4**) ,
- the alternator (see **16A**, **Starting - Charging**, **Alternator: Removal - Refitting**, page **16A-3**) .

AIR CONDITIONING or CLIMATE CONTROL

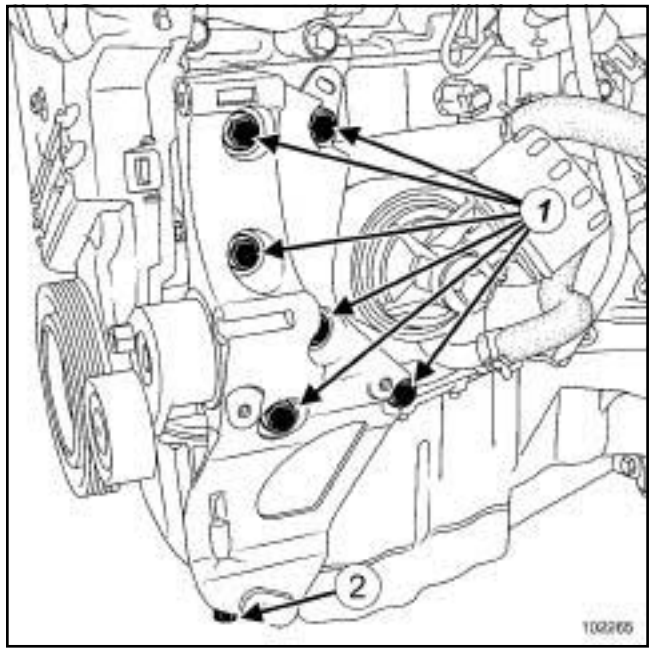

102265

❑ Remove:

- the multifunction support bolts (**1**) ,
- the bolt (**2**) from the multifunction support on the cylinder block,
- the multifunction support.

B84 or C84 or G84 or S84, and K4J – B84 or C84 or G84 or S84, and K4M

BASIC HEATING

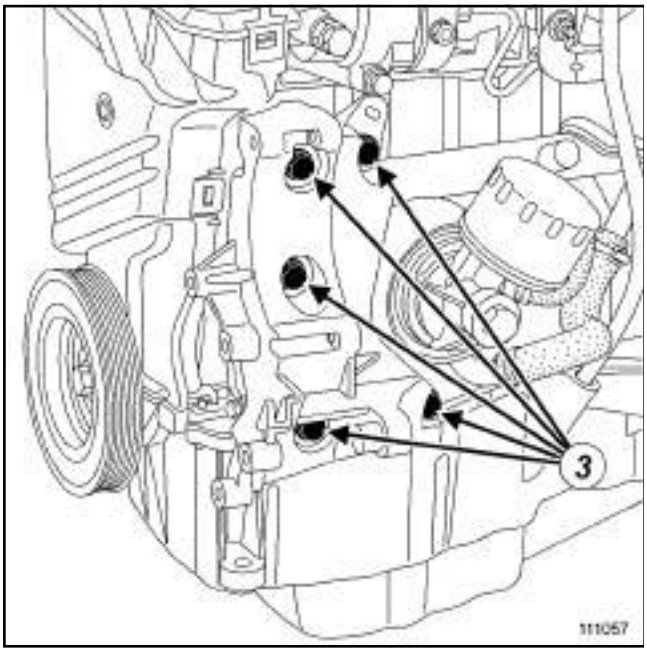

111057

❑ Remove:

- the multifunction support bolts (**3**) ,
- the multifunction support.

REFITTING

AIR CONDITIONING or CLIMATE CONTROL

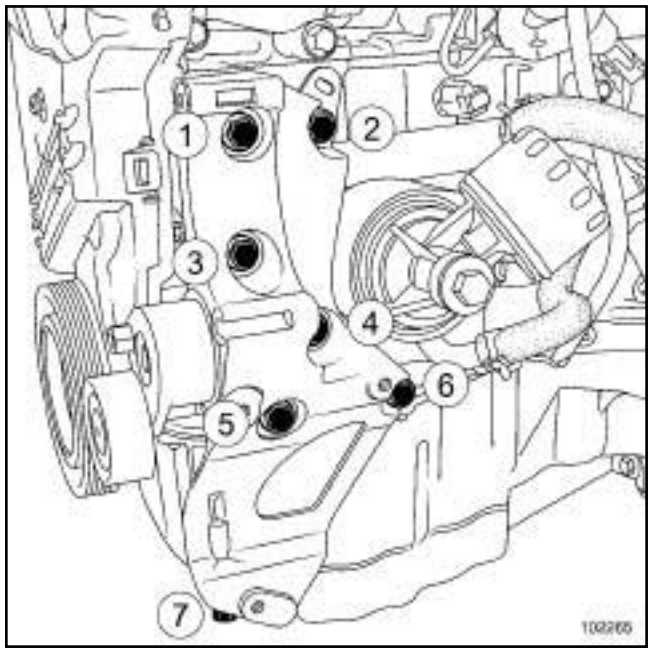

102265

❑ Refit:

- the multifunction support,
- the multifunction support bolts.

❑ Torque tighten and in order:

- the **multifunction support bolts (44 Nm)**,
- the **multifunction support bolt on the cylinder block (21 Nm)**.

B84 or C84 or G84 or S84, and K4J – B84 or C84 or G84 or S84, and K4M

BASIC HEATING

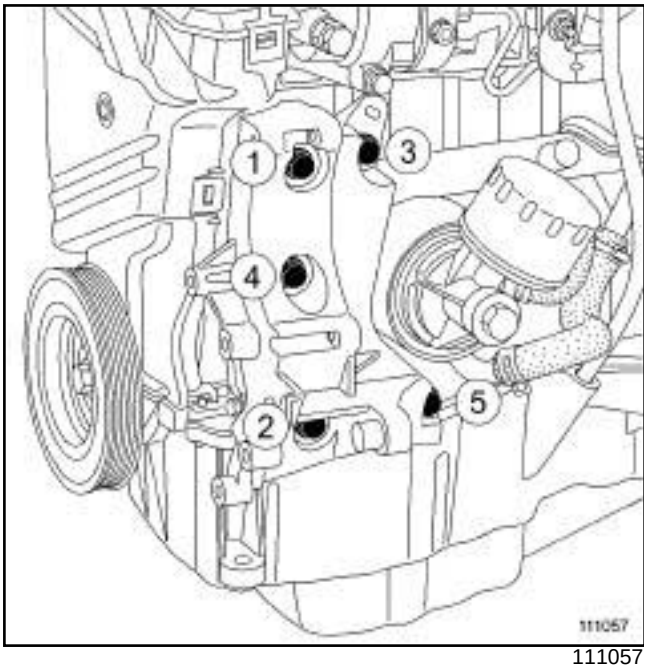

111057

❑ Refit:

- the multifunction support,
- the multifunction support bolts.

❑ Tighten to torque and in order the **multifunction support bolts (44 Nm)**.

❑ Refit:

- the alternator (see **16A**, **Starting - Charging**, **Alternator: Removal - Refitting**, page **16A-3**) .
- the accessories belt (see **11A**, **Top and front of engine**, **Accessories belt: Removal - Refitting**, page **11A-4**) ,
- the front bumper (see **MR 365, 55A, Exterior protection**),
- the engine undertray,
- the right-hand and left-hand wheel arch liners,
- the front wheels.

❑ Connect the battery (see **Battery: Removal - Refitting**) (MR 364, 80A, Battery).

❑ Refit the engine protectors.

B84 or C84 or G84 or S84, and K9K, and 722 or 724 or 728 or 729 or 732 or 734

Tightening torques ▽	
bolt mounting the multi-function support on the sump	**21 Nm**
multifunction support mounting bolts	**44 Nm**

REMOVAL

I - REMOVAL PREPARATION OPERATION

❑ Position the vehicle on a two-post lift (see **Vehicle: Towing and lifting**) (MR 364, 02A, Lifting equipment).

❑ Remove the engine covers.

❑ Disconnect the battery (see **Battery: Removal - Refitting**) (MR 364, 80A, Battery).

❑ Remove:

- the front wheels (see **Wheel: Removal - Refitting**) (MR 364, 35A, Wheels and tyres),
- the front section of the left and right-hand wheel arch liners (see **Front wheel arch liner: Removal - Refitting**) (MR 365, 55A, Exterior protection),
- the engine undertray,
- the front bumper (see **Front bumper: Removal - Refitting**) (MR 365, 55A, Exterior protection),
- the accessories belt (see **11A**, **Top and front of engine**, **Accessories belt: Removal - Refitting**, page **11A-4**) ,
- the alternator (see **16A**, **Starting - Charging**, **Alternator: Removal - Refitting**, page **16A-3**) .

II - OPERATION FOR REMOVAL OF PART CONCERNED

AIR CONDITIONING or CLIMATE CONTROL

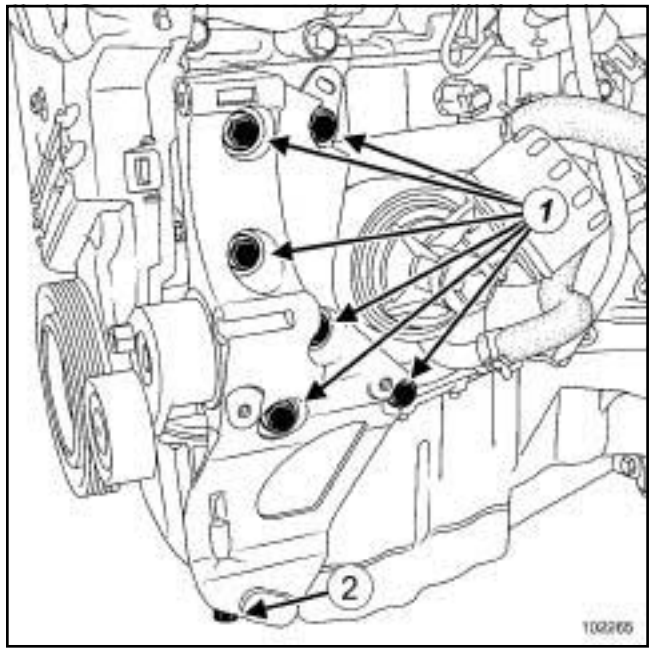

102265

❑ Remove:

- the multifunction support mounting bolts (**1**) ,
- the multifunction support mounting bolt (**2**) on the sump,
- the multifunction support.

B84 or C84 or G84 or S84, and K9K, and 722 or 724 or 728 or 729 or 732 or 734

BASIC HEATING

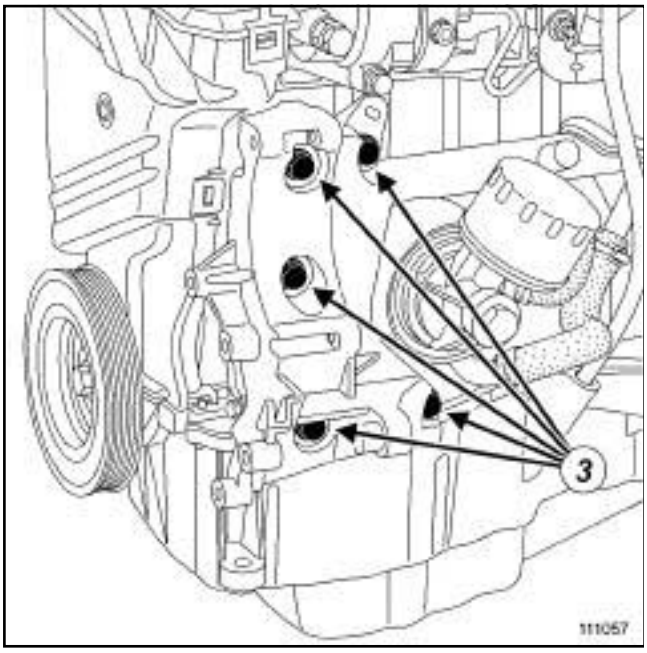

111057

❑ Remove:

- the multifunction support mounting bolts (**3**) ,
- the multifunction support.

REFITTING

I - REFITTING OPERATION FOR PART CONCERNED

AIR CONDITIONING or CLIMATE CONTROL

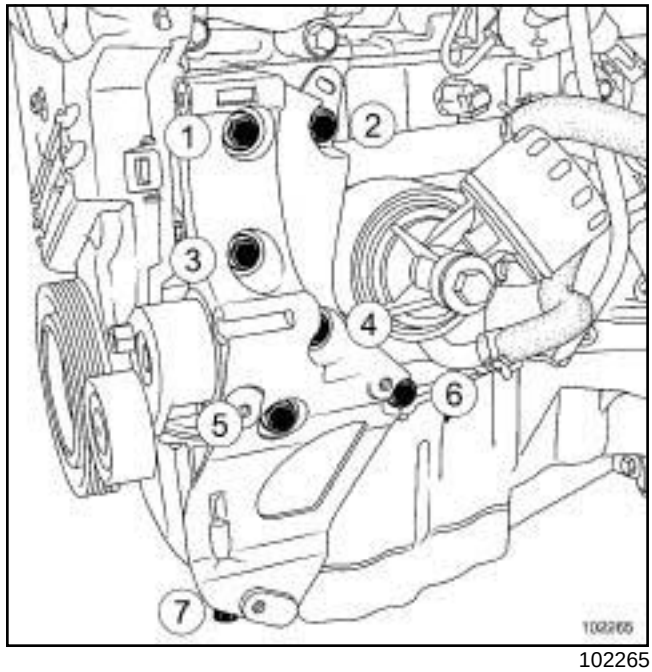

102265

❑ Refit:

- the multifunction support,
- the multifunction support mounting bolts.

❑ Torque tighten and in order:

- the **bolt mounting the multifunction support on the sump (21 Nm)**.
- the **multifunction support mounting bolts (44 Nm)**,

B84 or C84 or G84 or S84, and K9K, and 722 or 724 or 728 or 729 or 732 or 734

BASIC HEATING

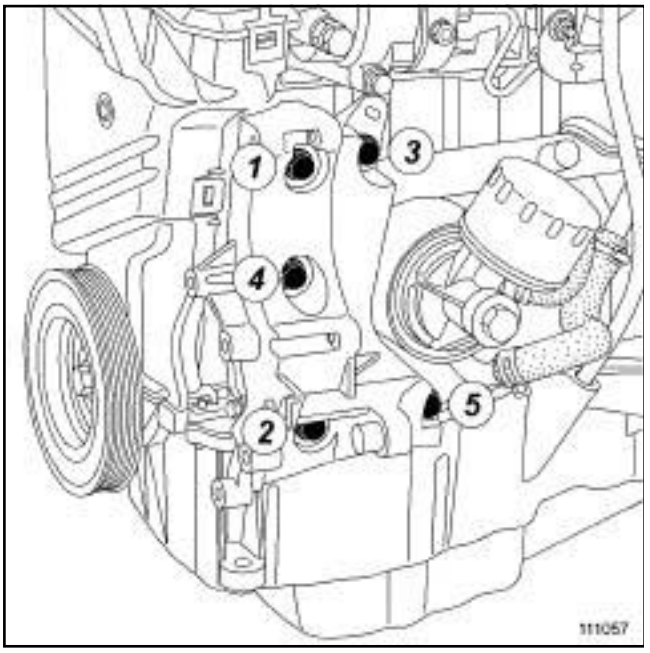

111057

❑ Refit:

- the multifunction support,
- the multifunction support mounting bolts.

❑ Tighten to torque and in order the **multifunction support mounting bolts (44 Nm)**.

II - FINAL OPERATION.

❑ Refit:

- the alternator (see **16A**, **Starting - Charging**, **Alternator: Removal - Refitting**, page **16A-3**) ,
- the accessories belt (see **11A**, **Top and front of engine**, **Accessories belt: Removal - Refitting**, page **11A-4**) ,
- the front bumper (see **Front bumper: Removal - Refitting**) (MR 365, 55A, Exterior protection),
- the engine undertray,
- the front section of the left and right-hand wheel arch liners (see **Front wheel arch liner: Removal - Refitting**) (MR 365, 55A, Exterior protection),
- the front wheels (see **Wheel: Removal - Refitting**) (MR 364, 35A, Wheels and tyres).

❑ Connect the battery (see **Battery : Removal - Refitting**) (MR 364, 80A, Battery).

❑ Refit the engine covers.

B84 or C84 or G84 or S84, and F4R, and 770 or 771 or 776, and AIR CONDITIONING or CLIMATE CONTROL – B84 or C84 or G84 or S84, and F9Q, and AIR CONDITIONING or CLIMATE CONTROL

Essential equipment
refrigerant charging station

Tightening torques ▽	
multifunction support bolts	**44 Nm**
air conditioning compressor bolts	**25 Nm**
air conditioning compressor strut bolts	**44 Nm**

REMOVAL

- ❑ Position the vehicle on a two-post lift (see **Vehicle: Towing and lifting**) (MR 364, 02A, Lifting equipment).
- ❑ Drain the refrigerant circuit using the **refrigerant charging station** (see **Coolant circuit Draining - Refilling**) (MR 364, 62A, Air conditioning).
- ❑ Disconnect the battery (see **Battery: Removal - Refitting**) (MR 364, 80A, Battery).
- ❑ Remove the alternator (see **16A**, **Starting - Charging**, **Alternator: Removal - Refitting**, page **16A-3**) (MR 364, 16A, Starting - Charging).

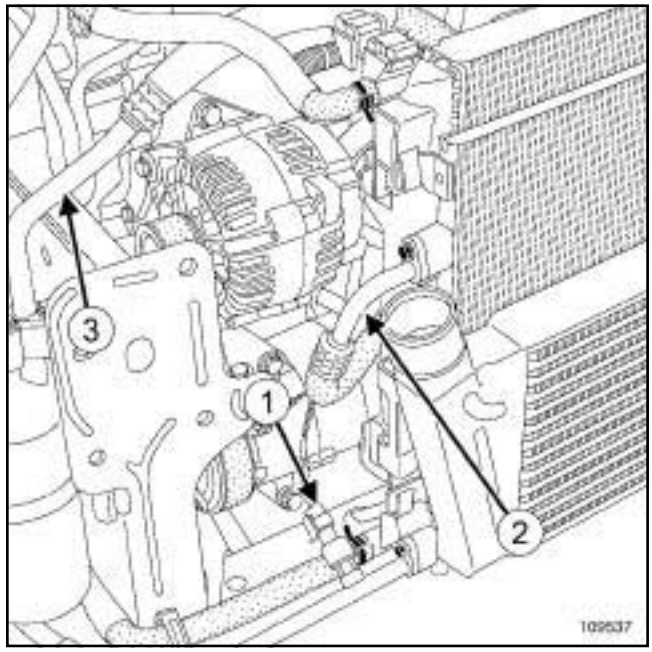

109537

- ❑ Disconnect:
  - the air conditioning compressor connector,
  - the pressure switch connector (**1**) .
- ❑ Remove:
  - the air conditioning compressor pipe (**2**) ,
  - the air conditioning pipe between the compressor and the dehydration canister (**3**) .

> Note:
>
> Plugs must be fitted to the hoses and the expansion valve to prevent moisture from entering the system.

- ❑ Remove:
  - the air conditioning compressor bolts ,
  - the air conditioning compressor.

B84 or C84 or G84 or S84, and F4R, and 770 or 771 or 776, and AIR CONDITIONING or CLIMATE CONTROL – B84 or C84 or G84 or S84, and F9Q, and AIR CONDITIONING or CLIMATE CONTROL

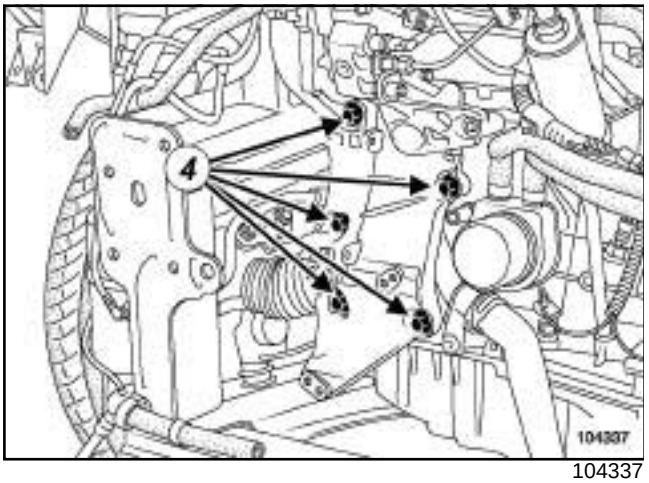

104337

- Remove:
  - the multifunction support bolts (**4**) ,
  - the multifunction support.

REFITTING

- Refit the multifunction support.
- Torque tighten:
  - the **multifunction support bolts (44 Nm)**,
  - the **air conditioning compressor bolts (25 Nm)**.
  - the **air conditioning compressor strut bolts (44 Nm)**
- Refit the alternator (see **16A**, **Starting - Charging**, **Alternator: Removal - Refitting**, page **16A-3**) (MR 364, 16A, Starting - Charging).
- Proceed in the reverse order to removal.
- Connect the battery (see **Battery: Removal - Refitting**) (MR 364, 80A, Battery).
- Fill the refrigerant circuit using the **refrigerant charging station** (see **Coolant circuit Draining - Refilling**) (MR 364, 62A, Air conditioning).

B84 or C84, and F4R, and 774

Tightening torques ▽	
multifunction support mounting bolts	**44 Nm**
air conditioning compressor mounting bolts	**25 Nm**

REMOVAL

❑ Position the vehicle on a two-post lift (see **Vehicle: Towing and lifting**) (MR 364, 02A, Lifting equipment).

❑ Disconnect the battery (see **Battery: Removal - Refitting**) (MR 364, 80A, Battery).

❑ Remove the alternator (see **16A**, **Starting - Charging**, **Alternator: Removal - Refitting**, page **16A-3**) .

❑ Disconnect:

- the air conditioning compressor connector,
- the pressostat connector.

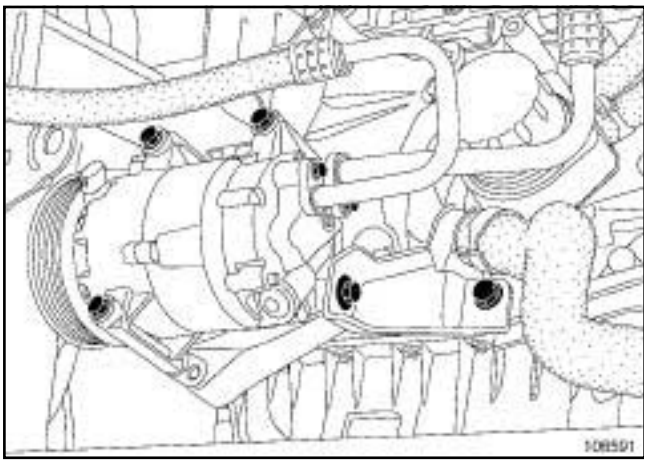

106591

❑ Remove the air conditioning compressor mountings.

❑ Attach the air conditioning compressor to the radiator cross member.

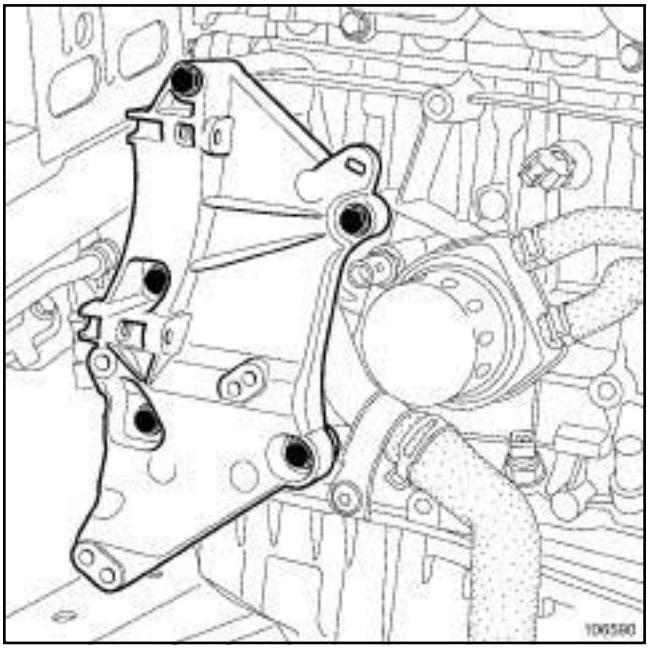

106590

❑ Remove:

- the multifunction support mountings,
- the multifunction support.

REFITTING

❑ Refit the multifunction support.

❑ Torque tighten:

- the **multifunction support mounting bolts (44 Nm)**,
- the **air conditioning compressor mounting bolts (25 Nm)**.

❑ Refit the alternator (see **16A**, **Starting - Charging**, **Alternator: Removal - Refitting**, page **16A-3**) .

❑ Proceed in the reverse order to removal.

❑ Connect the battery (see **Battery : Removal - Refitting**) (MR 364, 80A, Battery).

B84 or C84 or E84 or K84 or L84, and M9R

Tightening torques ▽	
multifunction support bolts	**44 Nm**

REMOVAL

I - REMOVAL PREPARATION OPERATION

❑ Position the vehicle on a two-post lift (see **Vehicle: Towing and lifting**) (MR 364, 02A, Lifting equipment).

❑ Disconnect the battery (see **Battery: Removal - Refitting**) (MR 364, 80A, Battery).

❑ Remove:

- the alternator (see **16A**, **Starting - Charging**, **Alternator: Removal - Refitting**, page **16A-3**) ,
- the air conditioning compressor (see **Compressor: Removal - Refitting**) (MR 364, 62A, Air conditioning).

II - OPERATION FOR REMOVAL OF PART CONCERNED

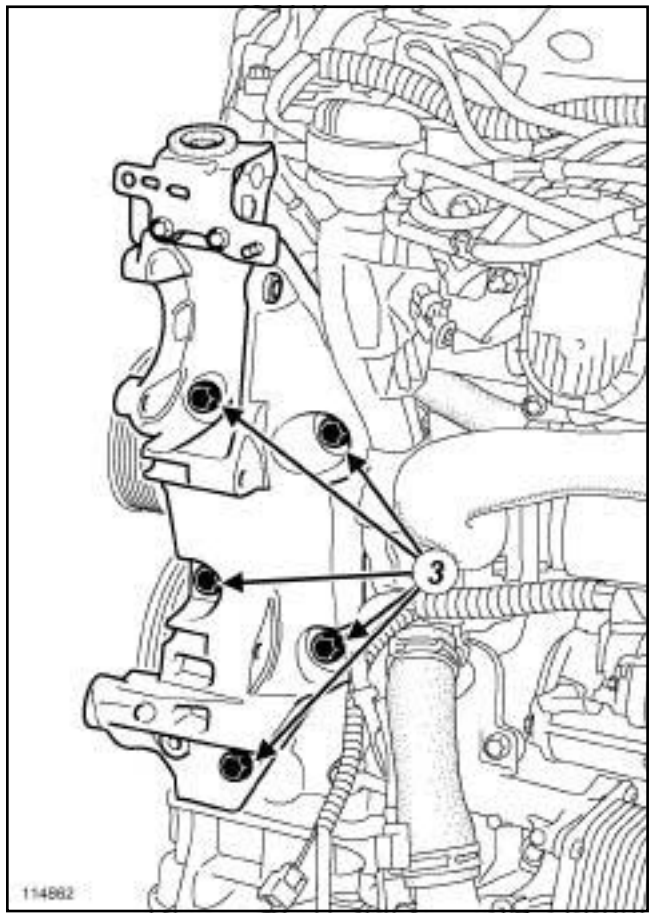

114862

❑ Remove:

- the multifunction support bolts (**3**) ,
- the multifunction support.

B84 or C84 or E84 or K84 or L84, and M9R

REFITTING

I - REFITTING OPERATION FOR PART CONCERNED

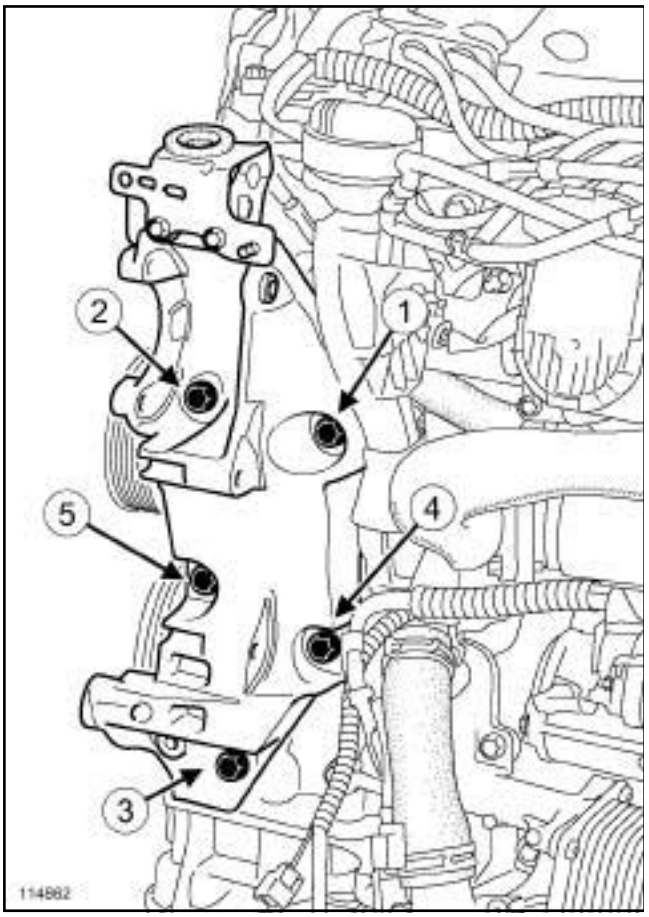

114862

- ❑ Position the multifunction support.
- ❑ Fit the multifunction support bolts without tightening them.
- ❑ Torque tighten in order the **multifunction support bolts (44 Nm)**.

II - FINAL OPERATION.

- ❑ Refit:
  - the air conditioning compressor (see **Compressor: Removal - Refitting**) (MR 364, 62A, Air conditioning),
  - the alternator (see **16A**, **Starting - Charging**, **Alternator: Removal - Refitting**, page **16A-3**) .
- ❑ Connect the battery (see **Battery: Removal - Refitting**) (MR 364, 80A, Battery).

K4M, and 760 or 761 or 766 or 812 or 813

Essential special tooling	
Mot. 1202-01	Pliers for large hose clips.
Mot. 1202-02	Pliers for small hose clips.
Mot. 1448	Long nose pliers for hose clips.

Essential equipment
refrigerant charging station
workshop hoist
load balancer

Tightening torques ▽	
front end panel upper bolt	**21 N.m**
front end panel lower bolt	**44 N.m**
half-subframe front bolt	**105 N.m**
half-subframe rear bolt	**21 N.m**

IMPORTANT

To avoid all risk of damage to the systems, apply the safety and cleanliness instructions and operation recommendations before carrying out any repair:

- (see **13B**, **Diesel injection**, **Diesel injection: Precautions for repair**, page **13B-12**) ,
- (see **Vehicle: Precautions for repair**) (01D, Mechanical introduction).

IMPORTANT

Wear leaktight gloves (Nitrile type) for this operation.

WARNING

To prevent impurities from entering the circuit, place protective plugs on all fuel circuit components exposed to the open air.

WARNING

To avoid any corrosion or damage, protect the areas on which fuel is likely to run.

WARNING

Keep the pipe unions away from contaminated areas.

WARNING

To prevent moisture from entering the system, place plugs on the cold loop components which are open to the air.

REMOVAL

❑ Position the vehicle on a two-post lift (see **Vehicle: Towing and lifting**) (02A, Lifting equipment).

❑ Remove:

- the engine covers,
- the front wheels (see **Wheel: Removal - Refitting**) (35A, Wheels and tyres),
- the front wheel arch liners (see **Front wheel arch liner: Removal - Refitting**) (55A, Exterior protection),
- the engine undertray bolts,
- the engine undertray.

❑ Drain:

- the gearbox (see **Manual gearbox oil: Draining - Refilling**) (21A, Manual gearbox),
- the engine (see **10A**, **Engine and cylinder block assembly**, **Engine oil: Draining - Refilling**, page **10A-43**) .

❑ Disconnect the battery (see **Battery : Removal - Refitting**) (80A, Battery).

AIR CONDITIONING or CLIMATE CONTROL

❑ Drain the refrigerant circuit using a **refrigerant charging station** (see **Coolant circuit Draining - Refilling**) (62A, Air conditioning).

K4M, and 760 or 761 or 766 or 812 or 813

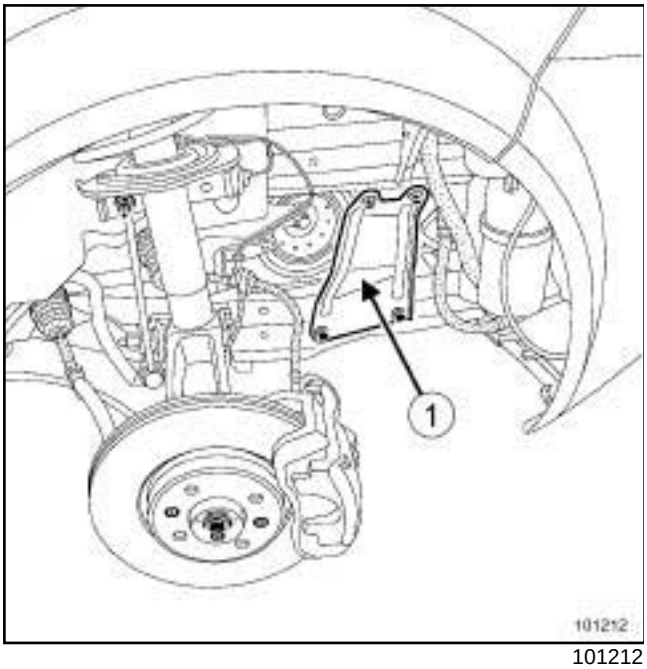

101212

❑ Remove:

- the battery (see **Battery: Removal - Refitting**) (80A, Battery),
- the side reinforcements (**1**) from the half-sub-frame,
- the front bumper (see **Front bumper: Removal - Refitting**) (55A, Exterior protection).

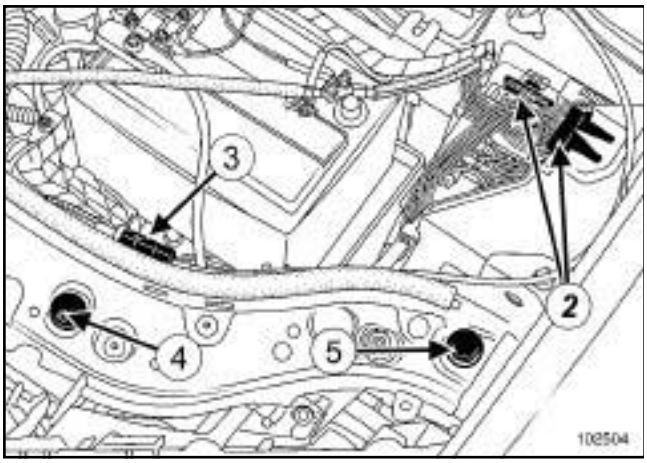

102504

❑ Disconnect the two connectors (**2**) .

❑ Unfasten the bonnet opening cable (**3**) .

❑ Remove:

- the clip (**4**) ,
- the mounting (**5**) .

❑ Disconnect the screen washer pipes.

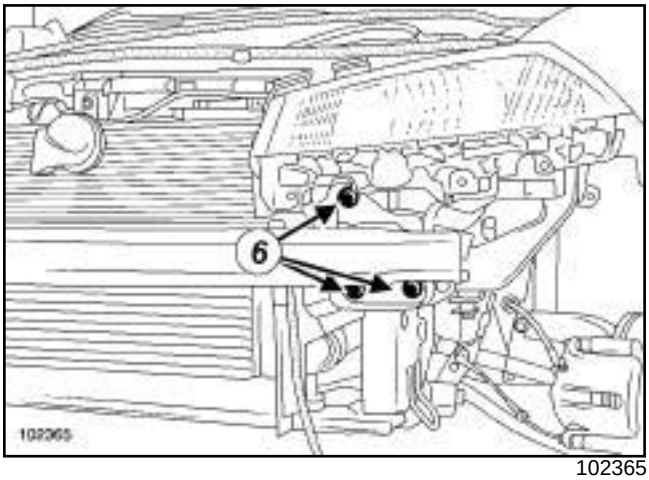

102365

❑ Remove:

- the front end panel bolts (**6**) ,
- the front of the vehicle.

❑ Drain the engine cooling system (see **19A**, **Cooling**, **Cooling circuit: Draining - Refilling**, page **19A-15**) .

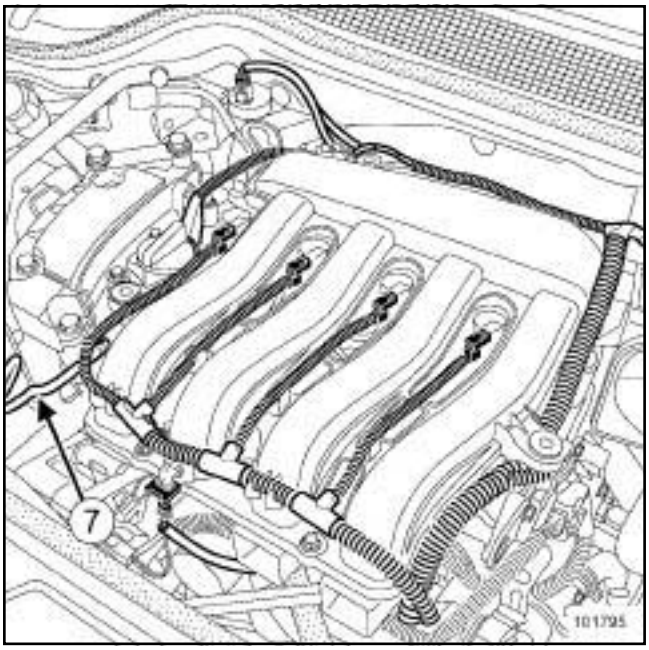

101795

❑ Disconnect:

- the fuel supply pipe (**7**) from the injector rail,
- the radiator top hose using the tool **(Mot. 1202-01)** or **(Mot. 1202-02)** or **(Mot. 1448)**,
- the fan assembly connectors.

❑ Unclip the electrical wiring from the fan assembly.

K4M, and 760 or 761 or 766 or 812 or 813

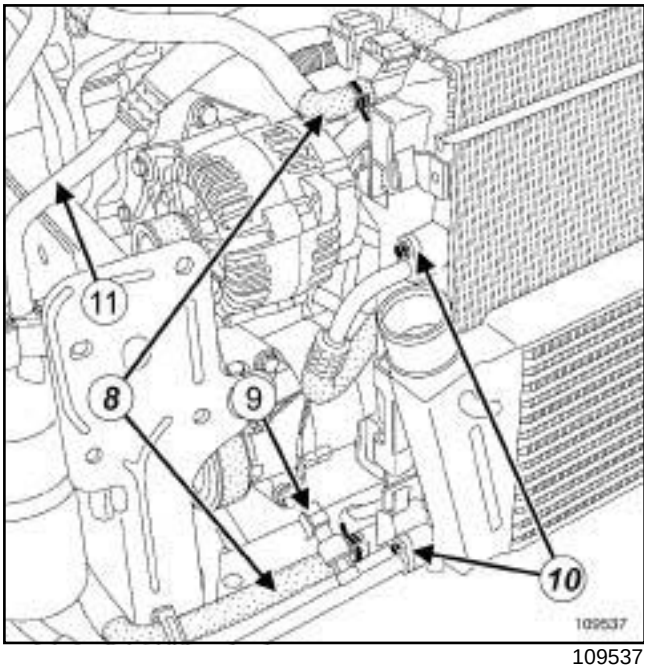

109537

❑ Disconnect the hoses from the expansion bottle on the cooling radiator side (**8**) .

AIR CONDITIONING or CLIMATE CONTROL

❑ Disconnect the pressostat connector from the lower air conditioning pipe on the condenser ***(9)*** .

❑ Remove:

- the air conditioning pipes from the condenser ***(10)*** ,
- the air conditioning pipe between the air conditioning compressor and the dehydrator reservoir ***(11)*** .

WARNING
To prevent moisture from entering the system, place plugs on the cold loop components which are open to the air.

❑ Remove the cooling assembly.

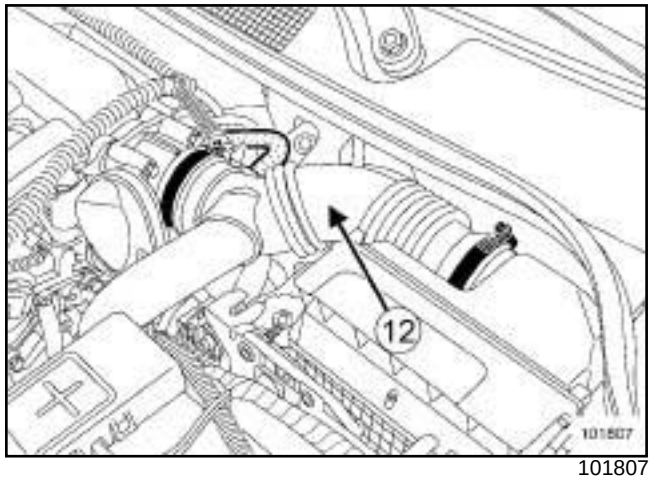

101807

❑ Remove the air pipe at the air filter outlet (**12**) .

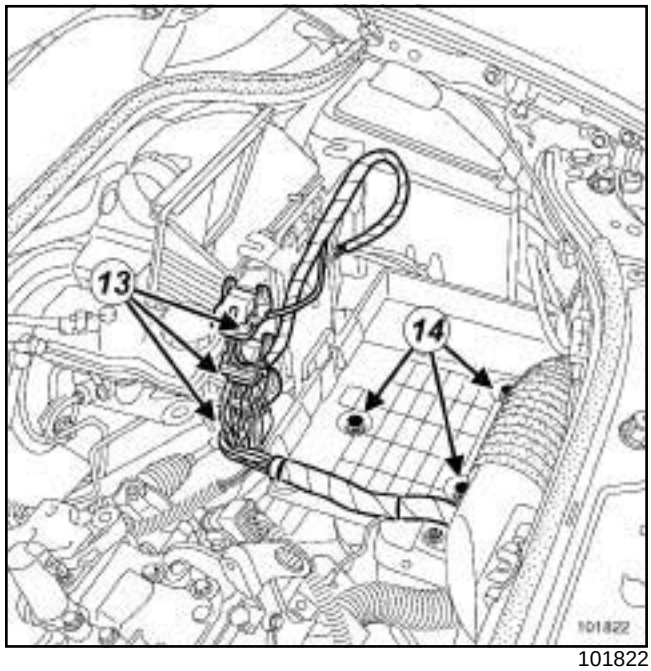

101822

❑ Disconnect the computer connectors (**13**) .

❑ Remove:

- the battery tray bolts (**14**) ,
- the battery tray,
- the computer mounting.

K4M, and 760 or 761 or 766 or 812 or 813

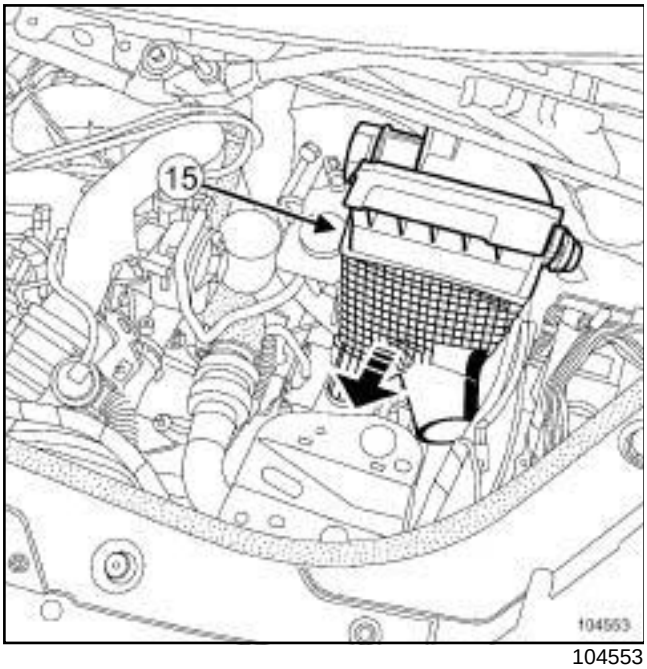

104553

❑ Remove the air filter unit (**15**) .

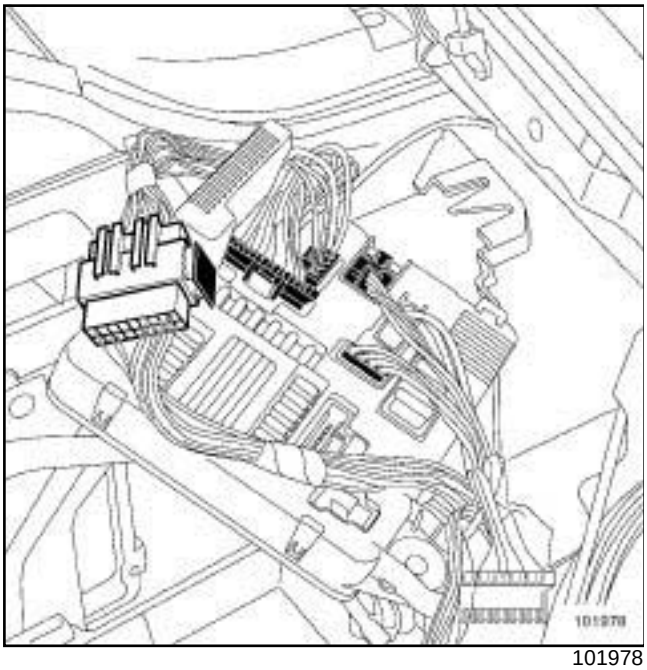

101978

❑ Disconnect the connectors from the relay plate wiring.

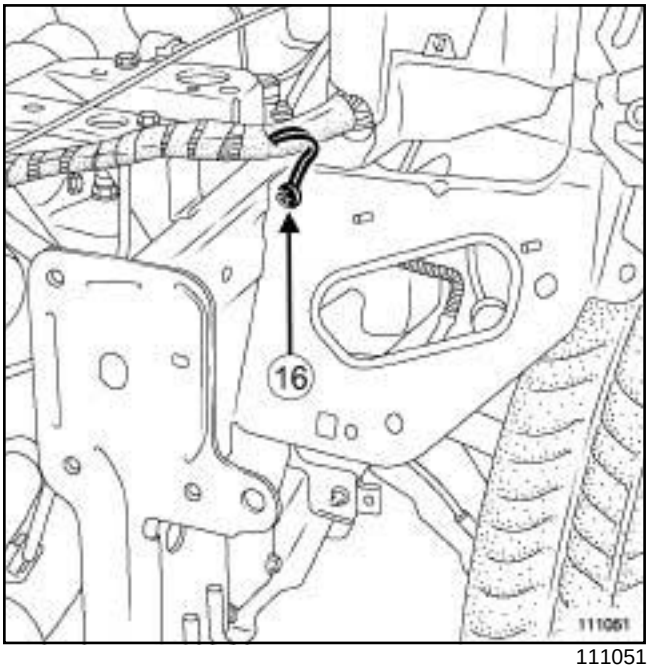

111051

❑ Remove the bolt (**16**) from the earth strap on the body.

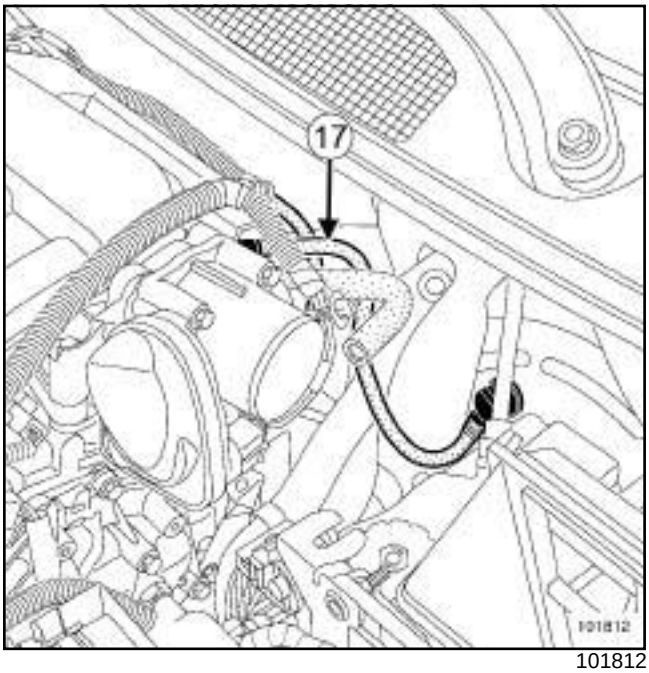

101812

❑ Remove the brake servo pipe (**17**) .

K4M, and 760 or 761 or 766 or 812 or 813

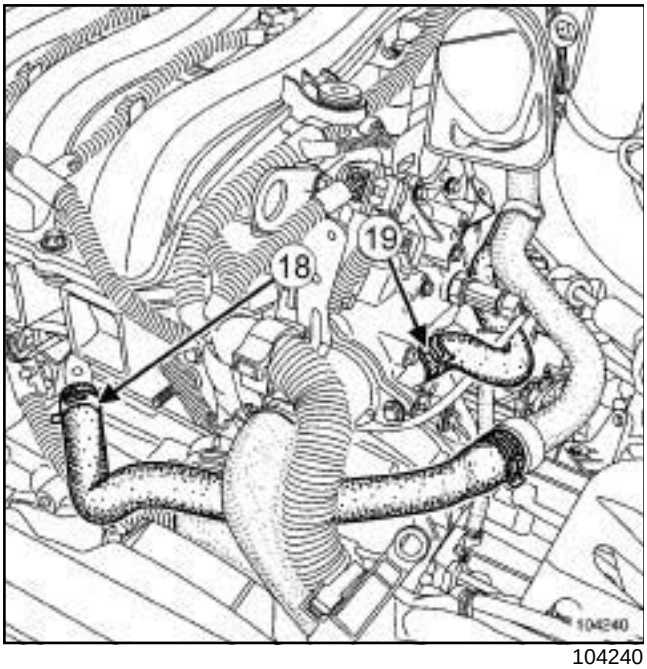

104240

❑ Disconnect:

- the hoses (**18**) and (**19**) using the tool **(Mot. 1202-01)** or **(Mot. 1202-02)** or **(Mot. 1448)**,
- the downstream oxygen sensor connector.

K4M, and 760

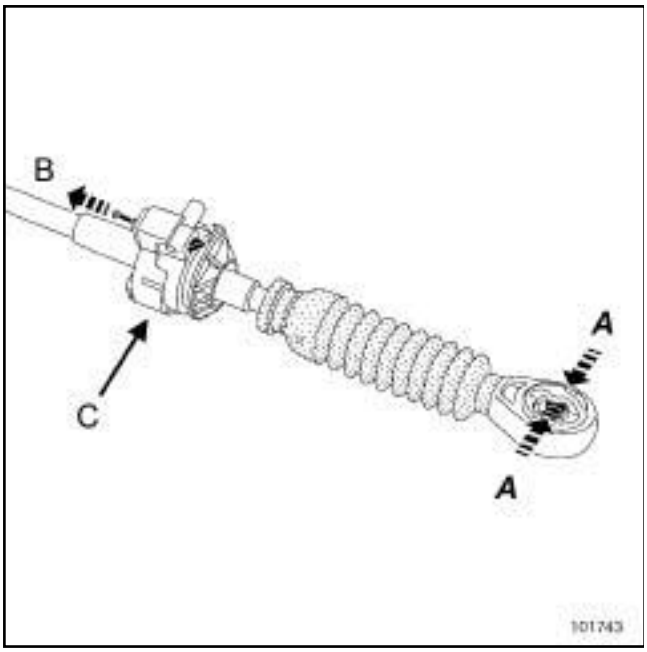

101743

❑ Unpick the lever cables on the gearbox:

- grip the gearbox control at (**A**) ,
- pull the pin at (**B**) ,
- raise the gearbox control at (**C**) .

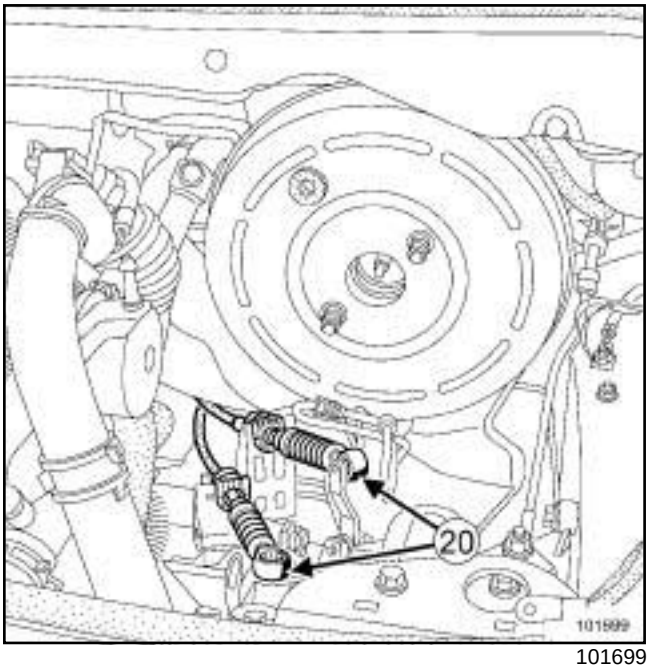

101699

❑ Remove the gearbox controls (**20**) .

K4M, and 761

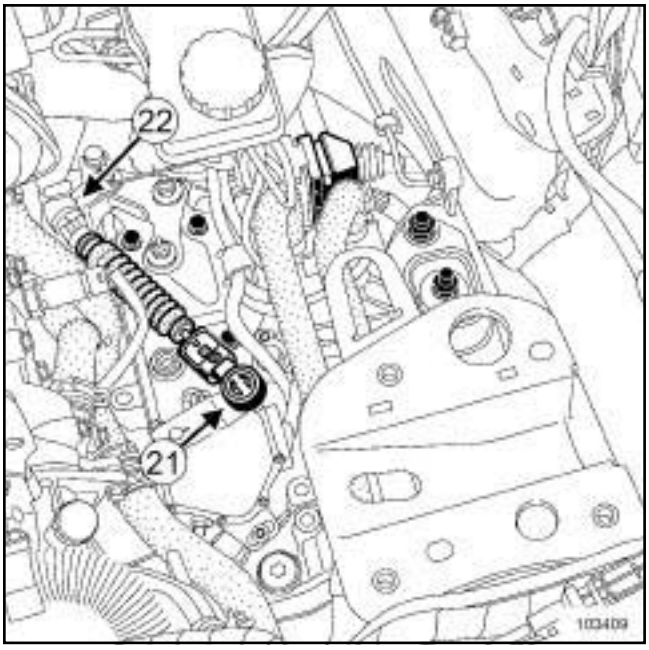

103409

❑ Remove:

- the multifunction switch cable ball joint (**21**) ,

K4M, and 760 or 761 or 766 or 812 or 813

- the multifunction switch cable (**22**) by loosening the sleeve stop.

K4M, and 760

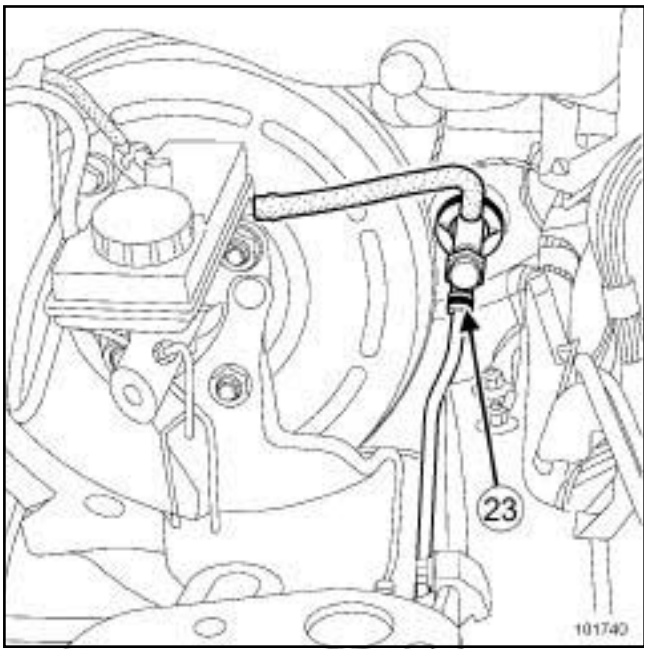

101740

❑ Pull out clip (**23**) .

❑ Disconnect the hydraulic clutch supply pipes.

> Note:
>
> Plug the pipes to prevent fluid from escaping.

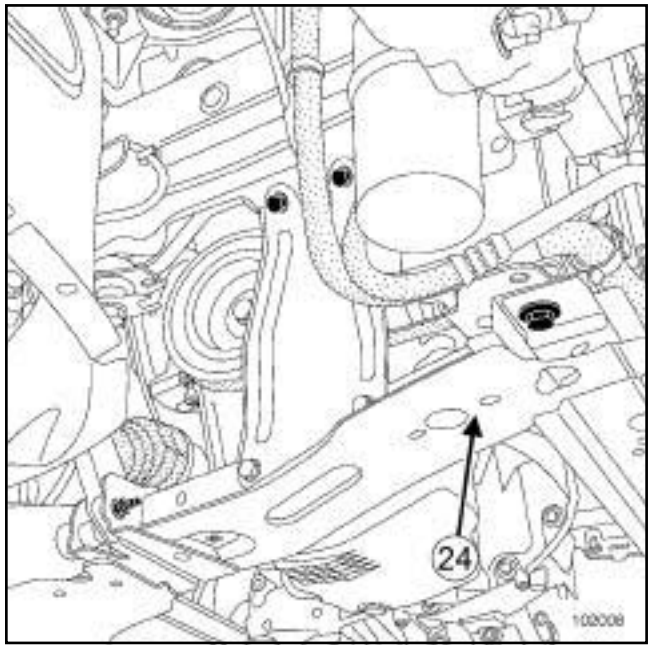

102008

❑ Remove:

- the front left-hand driveshaft (see **Front left-hand wheel driveshaft: Removal - Refitting**) (29A, Driveshafts),
- the front right-hand driveshaft (see **Front right-hand wheel driveshaft: Removal - Refitting**) (29A, Driveshafts),
- the exhaust downpipe mountings,
- the lower engine tie-bar,
- the half-subframe (**24**) .

❑ Position the **workshop hoist** fitted with a **load balancer** or a chain.

K4M, and 760 or 761 or 766 or 812 or 813

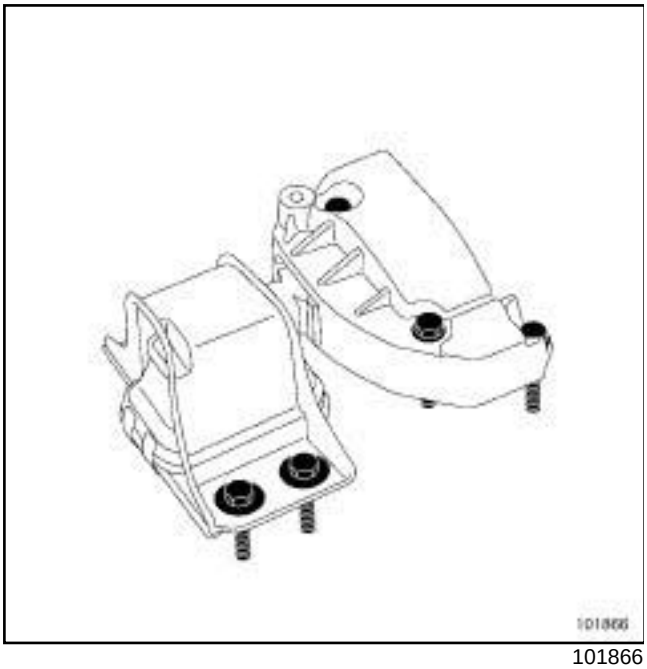

101866

- ❑ Mark the right-hand suspended engine mounting in relation to the body.
- ❑ Remove the right-hand suspended engine mounting (see **19D**, **Engine mounting**, **Right-hand suspended engine mounting: Removal - Refitting**, page **19D-20**) .

K4M, and 760

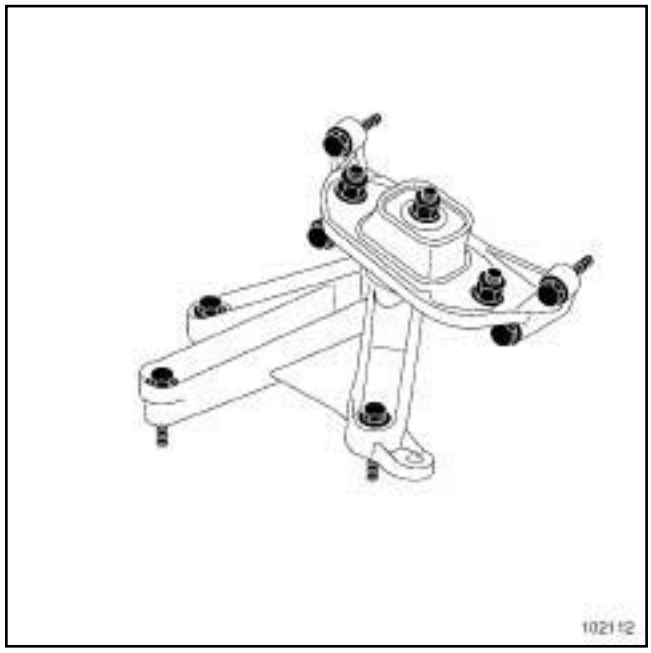

102112

- ❑ Remove the left-hand suspended engine mounting (see **19D**, **Engine mounting**, **Left-hand suspended engine mounting: Removal - Refitting**, page **19D-12**) .

K4M, and 760 or 761 or 766 or 812 or 813

K4M, and 761

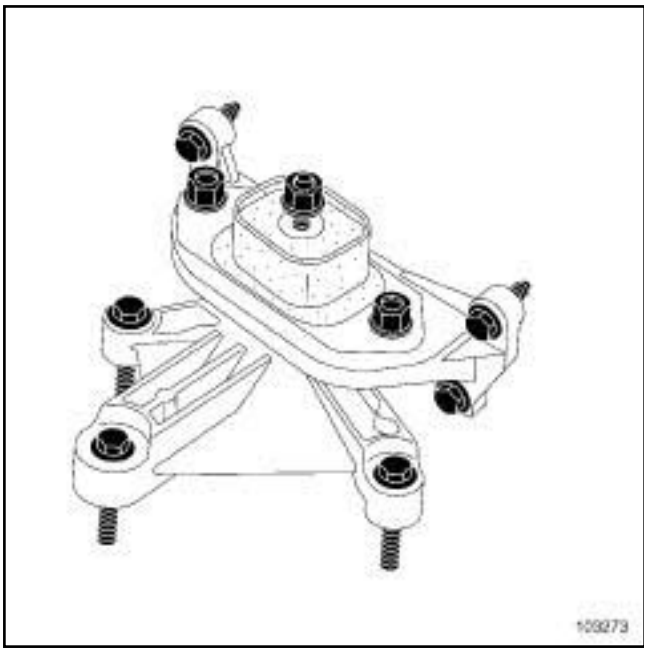

103273

❑ Remove the left-hand suspended engine mounting (see **19D**, **Engine mounting**, **Left-hand suspended engine mounting: Removal - Refitting**, page **19D-12**) .

❑ Turn the « engine - gearbox » assembly to remove it.

REFITTING

❑ If replacing the engine (see **Standard replacement**) (Technical Note 6023A, 10A, Engine and cylinder block assembly).

❑ Position the « engine - gearbox » assembly in the vehicle.

❑ Refit:

- the right-hand suspended engine mounting (see **19D**, **Engine mounting**, **Right-hand suspended engine mounting: Removal - Refitting**, page **19D-20**) ,
- the left-hand suspended engine mounting (see **19D**, **Engine mounting**, **Left-hand suspended engine mounting: Removal - Refitting**, page **19D-12**) ,
- the lower engine tie-bar (see **19D**, **Engine mounting**, **Lower engine tie-bar: Removal - Refitting**, page **19D-36**) ,
- the front left-hand driveshaft (see **Front left-hand wheel driveshaft: Removal - Refitting**) (29A, Driveshafts),
- the front right-hand driveshaft (see **Front right-hand wheel driveshaft: Removal - Refitting**) (29A, Driveshafts).

❑ Proceed in the reverse order to removal.

❑ Torque tighten:

- the **front end panel upper bolt (21 N.m)**,
- the **front end panel lower bolt (44 N.m)**,
- the **half-subframe front bolt (105 N.m)**,
- the **half-subframe rear bolt (21 N.m)**.

❑ Add the brake fluid to the brake fluid reservoir.

K4M, and 760

❑ Bleed the clutch (see **Clutch circuit: Bleeding**) (37A, Mechanical component controls).

❑ Refit the battery (see **Battery : Removal - Refitting**) (80A, Battery).

❑ Perform the following operations:

- fill up the gearbox oil (see **Manual gearbox oil: Draining - Refilling**) (21A, Manual gearbox),
- top up the engine oil (see **10A**, **Engine and cylinder block assembly**, **Engine oil: Draining - Refilling**, page **10A-43**) ,
- fill and bleed the coolant circuit (see **19A**, **Cooling**, **Cooling circuit: Draining - Refilling**, page **19A-15**) .

AIR CONDITIONING or CLIMATE CONTROL

❑ Fill the refrigerant circuit using a **refrigerant charging station** (see **Coolant circuit Draining - Refilling**) (62A, Air conditioning).

K4M, and 760 or 761 or 766 or 812 or 813

❑ Refit:

- the front bumper (see **Front bumper: Removal - Refitting**) (55A, Exterior protection),
- the front wheel arch liners (see **Front wheel arch liner: Removal - Refitting**) (55A, Exterior protection),
- the front wheels (see **Wheel: Removal - Refitting**) (35A, Wheels and tyres),
- the engine undertray,
- the engine cover.

Note:

It is essential to initialise the xenon bulb system (if fitted to the vehicle) (see **Xenon headlights: Adjustment**) (80C, Xenon bulbs).

❑ Adjust the headlights (see **Halogen headlight: Adjustment**) (80B, Headlights).

K9K, and 722 or 728

Essential special tooling	
Car. 1363	Set of trim removal levers.
Mot. 1202-01	Pliers for large hose clips.
Mot. 1202-02	Pliers for small hose clips.
Mot. 1448	Long nose pliers for hose clips.

Essential equipment
refrigerant charging station
workshop hoist
load balancer

Tightening torques ▽	
front end panel upper bolt	**21 N.m**
front end panel lower bolt	**44 N.m**
half-subframe front bolt	**165 N.m**
half-subframe rear bolt	**21 N.m**

IMPORTANT

To avoid all risk of damage to the systems, apply the safety and cleanliness instructions and operation recommendations before carrying out any repair:

- (see **13B**, **Diesel injection**, **Diesel injection: Precautions for repair**, page **13B-12**) ,
- (see **Vehicle: Precautions for repair**) (01D, Mechanical introduction).

IMPORTANT

Wear leaktight gloves (Nitrile type) for this operation.

WARNING

To prevent impurities from entering the circuit, place protective plugs on all fuel circuit components exposed to the open air.

WARNING

To avoid any corrosion or damage, protect the areas on which fuel is likely to run.

WARNING

Keep the pipe unions away from contaminated areas.

WARNING

To prevent moisture from entering the system, place plugs on the cold loop components which are open to the air.

Note:

Procedure for removing the air inlet duct on the intercooler:

- detach the hose using the tool **(Car. 1363)**,
- do not use a degreaser, brake cleaning product, or any other product,
- clean the bearing face on the intercooler and on the hose with a dry, lint-free cloth,
- refit the clip in the same position in the event that the hose is not replaced,
- it is essential to replace the hoses and/or the intercooler if they are damaged.

If this procedure is not followed the pipes may leak or come undone.

K9K, and 722 or 728

REMOVAL

❑ Position the vehicle on a two-post lift (see **Vehicle: Towing and lifting**) (02A, Lifting equipment).

❑ Remove:

- the engine covers,
- the front wheels (see **Wheel: Removal - Refitting**) (35A, Wheels and tyres),
- the front wheel arch liners (see **Front wheel arch liner: Removal - Refitting**) (55A, Exterior protection),
- the engine undertray bolts,
- the engine undertray.

❑ Drain:

- the gearbox (see **Manual gearbox oil: Draining - Refilling**) (21A, Manual gearbox),
- the engine (see **10A**, **Engine and cylinder block assembly**, **Engine oil: Draining - Refilling**, page **10A-43**) .

❑ Disconnect the battery (see **Battery: Removal - Refitting**) (80A, Battery).

AIR CONDITIONING or CLIMATE CONTROL

❑ Drain the refrigerant circuit using a **refrigerant charging station** (see **Coolant circuit Draining - Refilling**) (62A, Air conditioning).

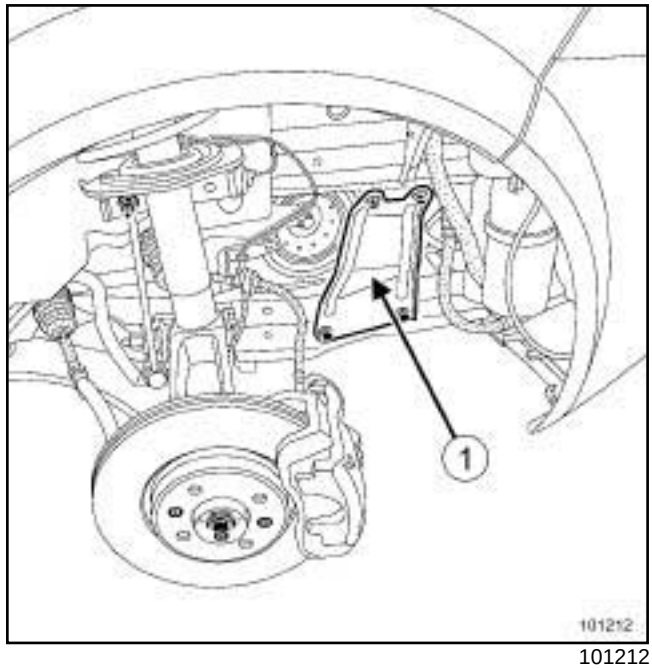

101212

❑ Remove:

- the battery (see **Battery: Removal - Refitting**) (80A, Battery),
- the side reinforcements (**1**) from the half subframe cross member,
- the front bumper (see **Front bumper: Removal - Refitting**) (55A, Exterior protection).

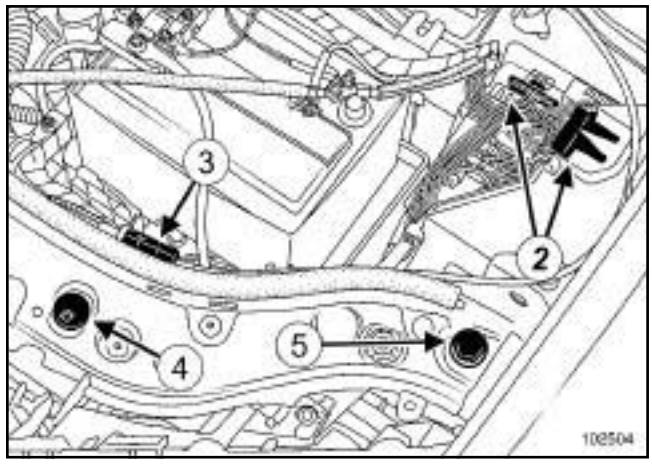

102504

❑ Disconnect the connectors (**2**) .

❑ Unfasten the bonnet opening cable (**3**) .

❑ Remove:

- the clip (**4**) ,
- the mounting (**5**) .

❑ Disconnect the screen washer pipes.

K9K, and 722 or 728

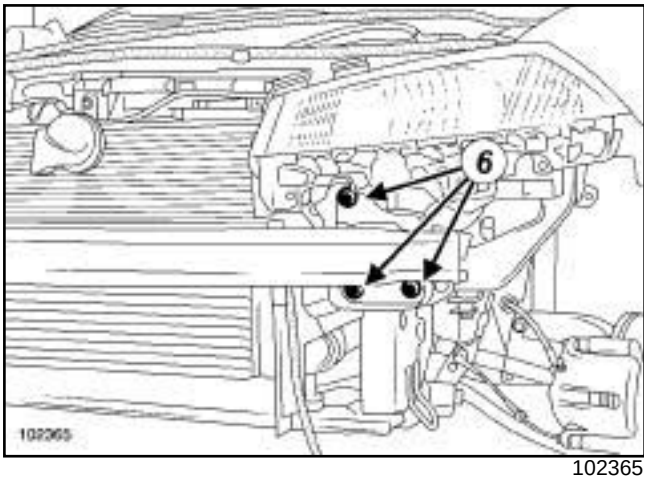

102365

❑ Remove:

- the front end panel bolts (**6**) ,
- the front of the vehicle.

❑ Drain the engine cooling system (see **19A**, **Cooling**, **Cooling circuit: Draining - Refilling**, page **19A-15**) .

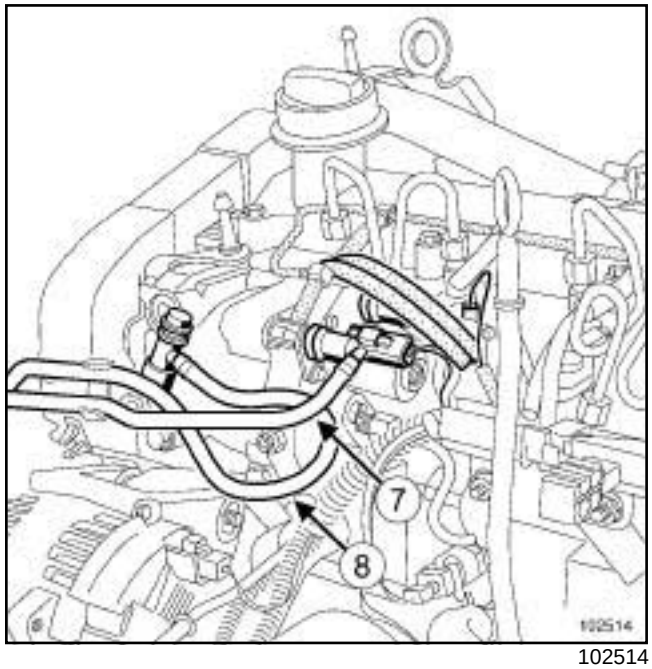

102514

❑ Remove:

- the fuel supply pipe (**7**) ,
- the fuel return pipe (**8**) .

WARNING
To prevent impurities from entering the circuit, place protective plugs on all fuel circuit components exposed to the open air.

❑ Disconnect:

- the radiator top hose using the tool **(Mot. 1202-01)** or **(Mot. 1202-02)** or **(Mot. 1448)**,
- the fan assembly connectors.

❑ Unclip the electrical wiring from the fan assembly.

K9K, and 722 or 728

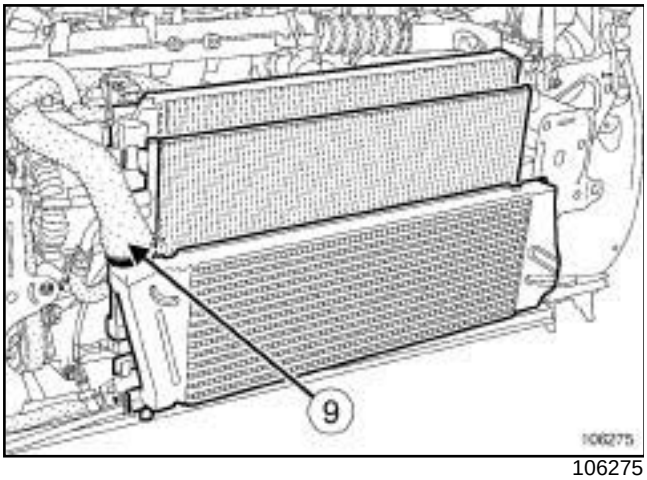

106275

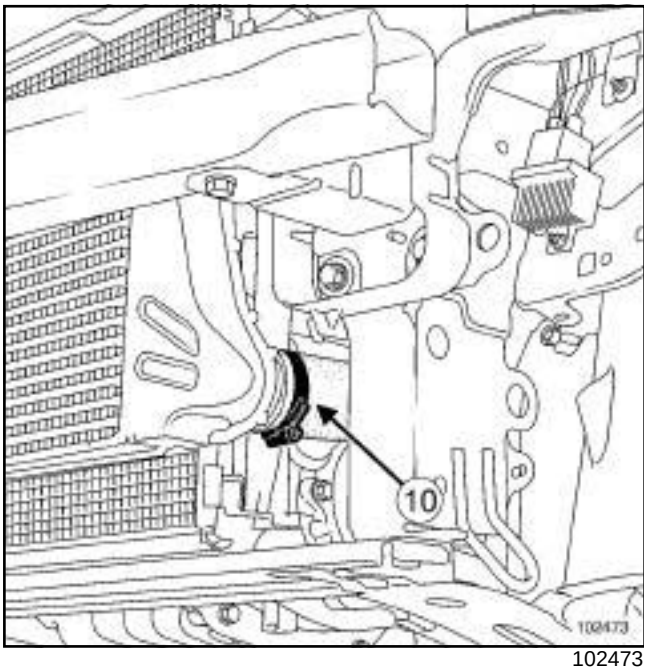

102473

❑ Remove the intercooler air pipes (**9**) and (**10**) .

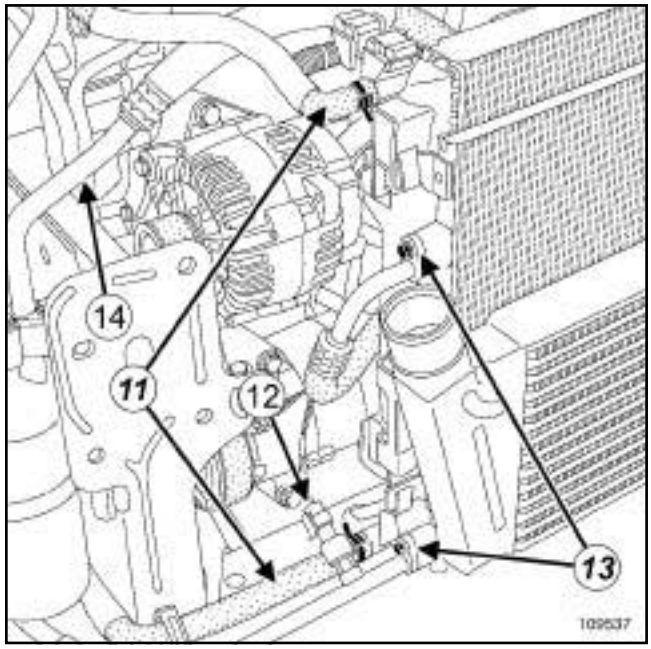

109537

❑ Disconnect the hoses from the expansion bottle on the cooling radiator side (**11**) .

AIR CONDITIONING or CLIMATE CONTROL

❑ Disconnect the pressostat connector on the lower air conditioning pipe from the condenser ***(12)*** .

❑ Remove:

- the air conditioning pipes on the condenser ***(13)*** ,
- the air conditioning hose between the air conditioning compressor and the dehydrator reservoir ***(14)*** .

WARNING

To prevent moisture from entering the system, place plugs on the cold loop components which are open to the air.

❑ Remove all cooling radiators.

K9K, and 722 or 728

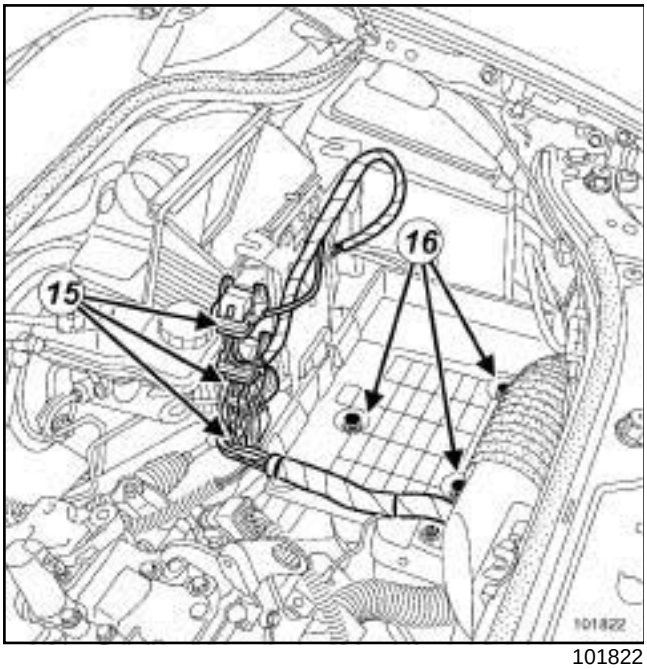

101822

❑ Disconnect the computer connectors (**15**) .

❑ Remove:

- the battery tray bolts (**16**) ,
- the battery tray,
- the computer mounting.

K9K, and 728

❑ Move the turbocharger pressure solenoid valve to one side.

❑ Disconnect:

- the air filter outlet duct,
- the flowmeter connector (if fitted to the vehicle).

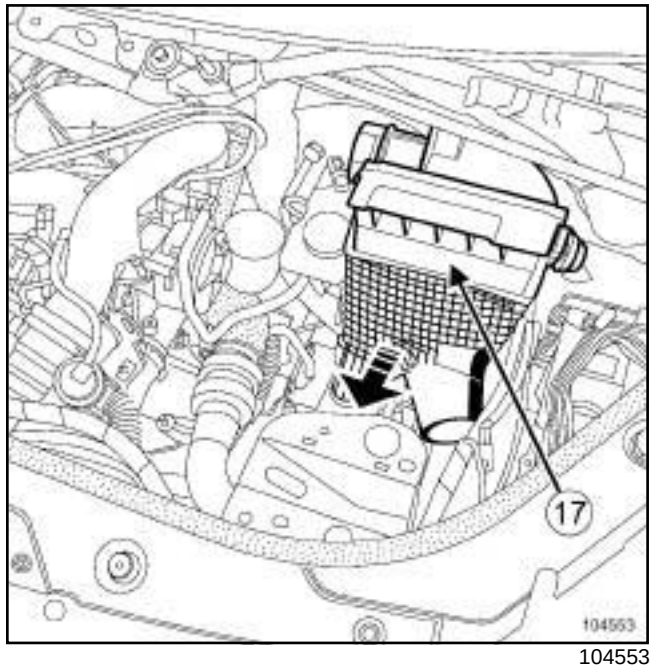

104553

❑ Remove the air filter unit (**17**) .

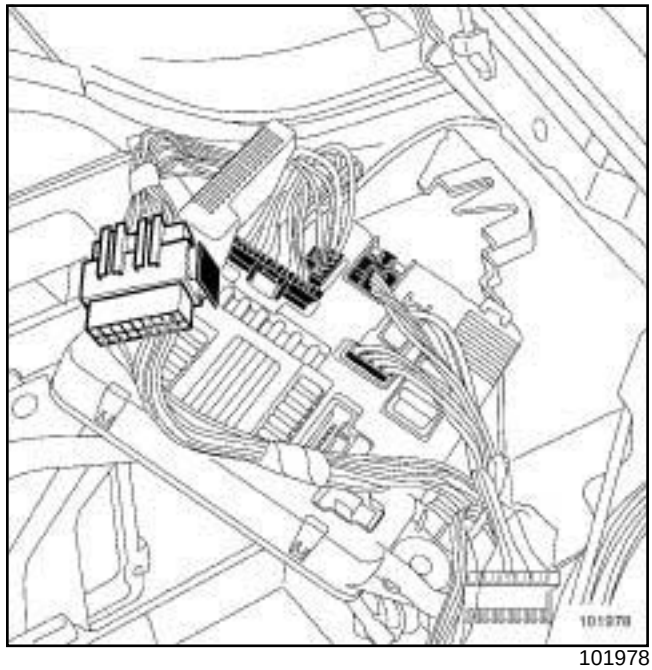

101978

❑ Disconnect the connectors from the relay plate wiring.

K9K, and 722 or 728

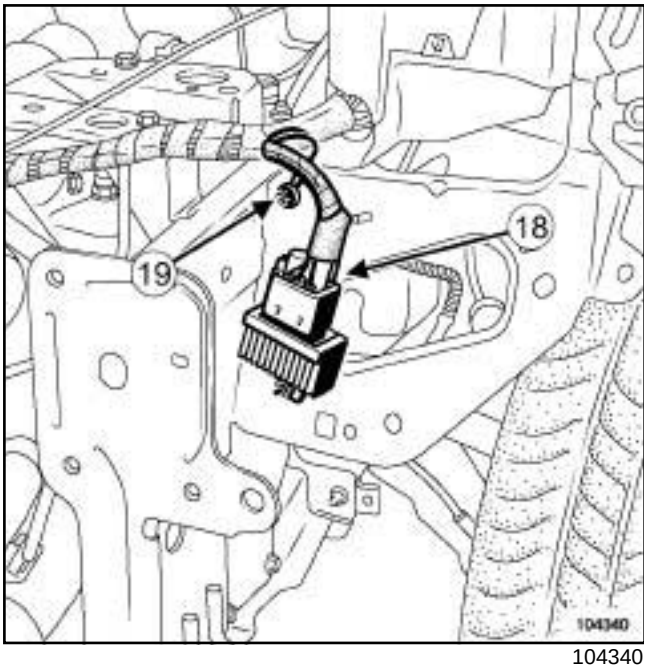

104340

❑ Disconnect:

- the pre-postheating unit (**18**) ,
- the earth terminal on the body (**19**) .

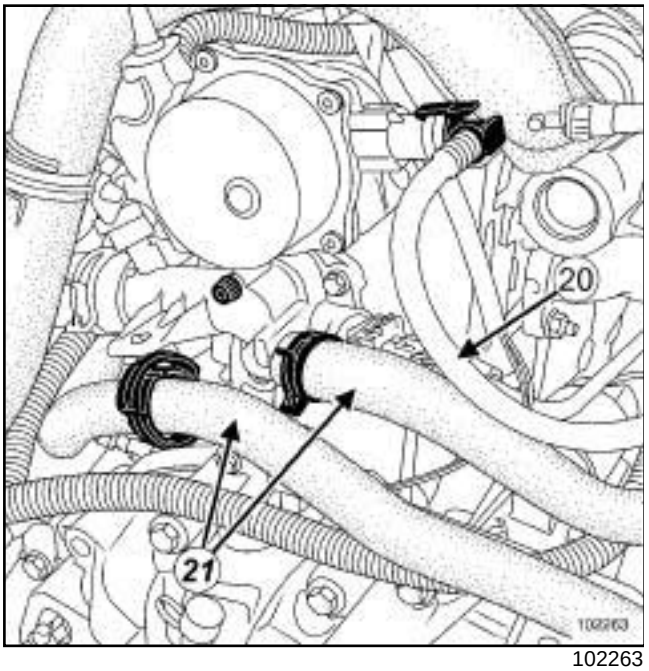

102263

❑ Remove the brake servo hose (**20**) .

❑ Disconnect the hoses from the water chamber heater radiator (**21**) using the tool **(Mot. 1202-01)** or **(Mot. 1202-02)** or **(Mot. 1448)**.

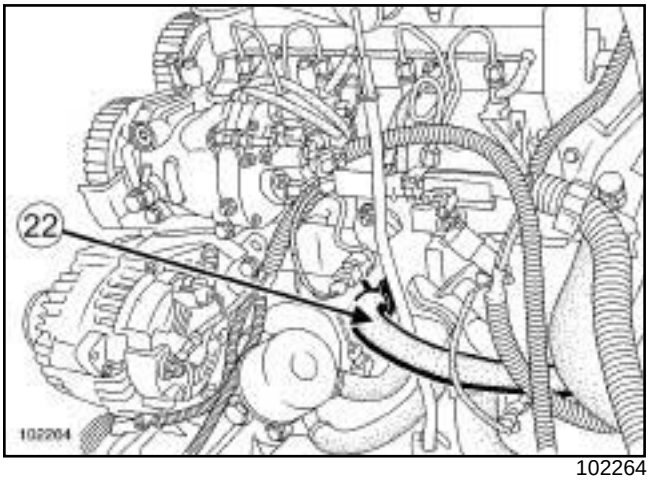

102264

❑ Disconnect the hoses from the water chamber heater radiator (**22**) using the tool **(Mot. 1202-01)** or **(Mot. 1202-02)** or **(Mot. 1448)**.

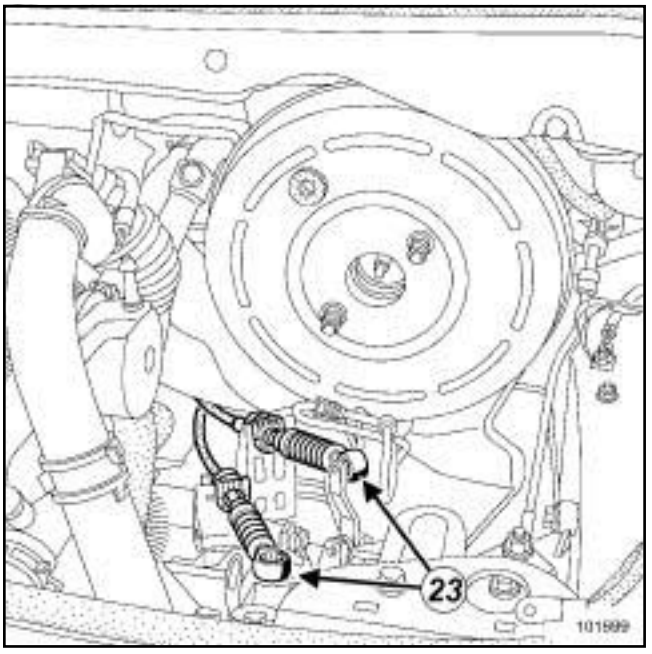

101699

❑ Remove the gearbox controls (**23**) .

K9K, and 722 or 728

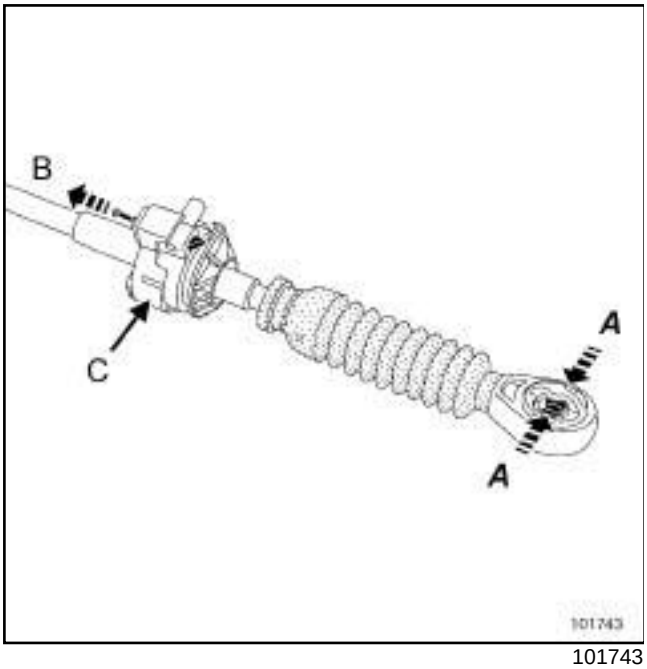

101743

❑ Unpick the lever cables on the gearbox:

- grip the gearbox control at (**A**) ,
- pull the pin at (**B**) ,
- raise the gearbox control at (**C**) .

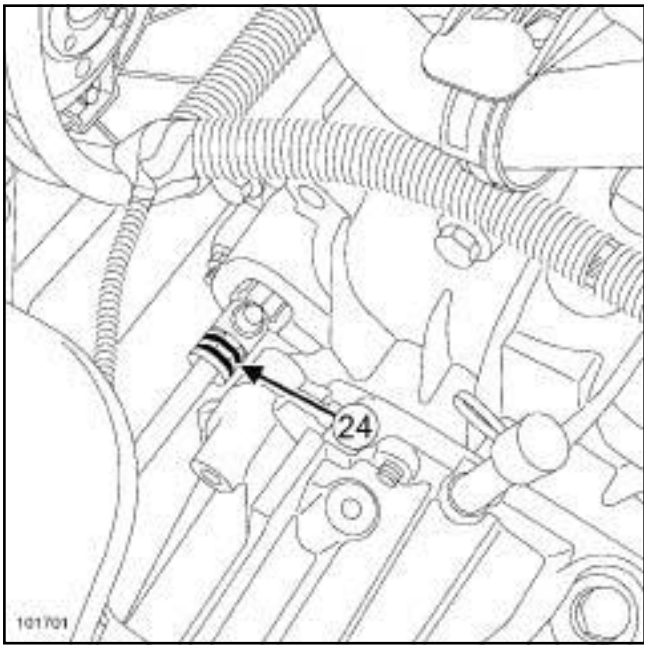

101701

❑ Remove the clutch hydraulic control (**24**) .

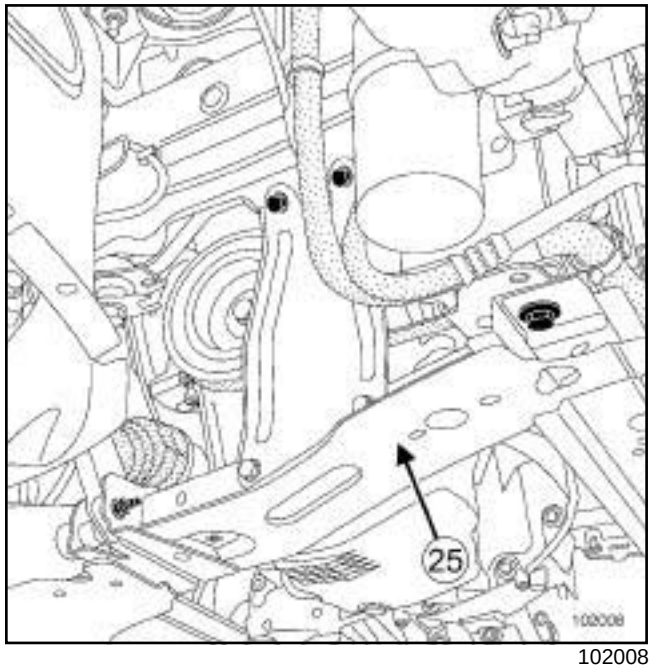

102008

❑ Remove:

- the front right-hand driveshaft (see **Front right-hand wheel driveshaft: Removal - Refitting**) (29A, Driveshafts),
- the front left-hand driveshaft (see **Front left-hand wheel driveshaft: Removal - Refitting**) (29A, Driveshafts),
- the exhaust downpipe mountings,
- the lower engine tie-bar,
- the half-subframe (**25**) .

❑ Position the **workshop hoist** fitted with a **load balancer** or a chain.

K9K, and 722 or 728

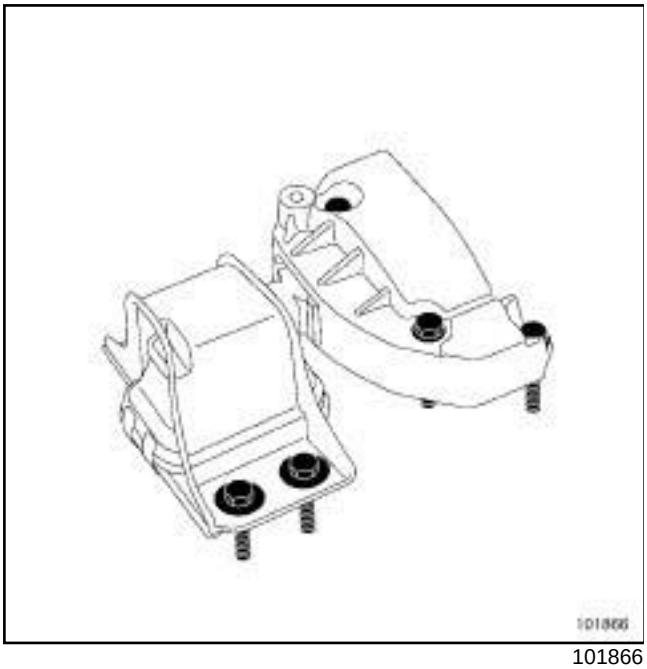

101866

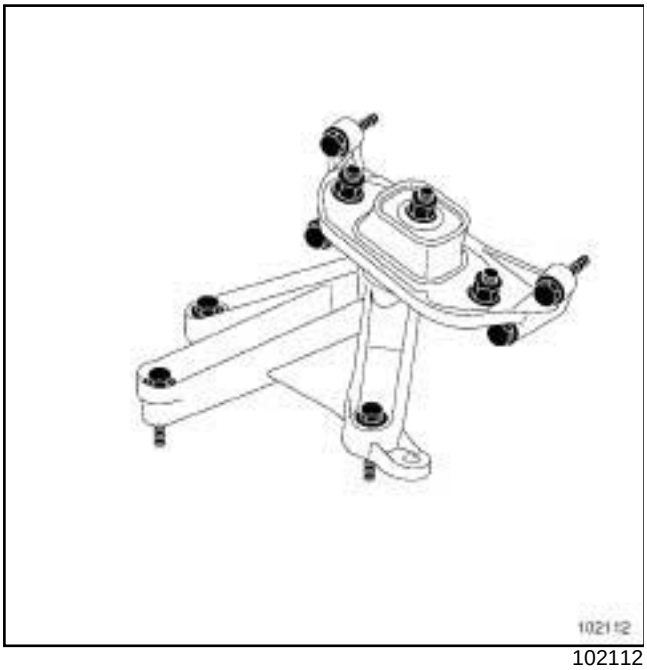

102112

❑ Mark the suspended engine mounting in relation to the body.

❑ Remove:

- the lower engine tie-bar (see **19D**, **Engine mounting**, **Lower engine tie-bar: Removal - Refitting**, page **19D-36**) ,
- the suspended engine mounting (see **19D**, **Engine mounting**, **Right-hand suspended engine mounting: Removal - Refitting**, page **19D-20**) ,
- the suspended gearbox mounting (see **19D**, **Engine mounting**, **Left-hand suspended engine mounting: Removal - Refitting**, page **19D-12**) .

❑ Turn the « engine - gearbox » assembly to remove it.

REFITTING

❑ If replacing the engine (see **Standard replacement**) (Technical Note 6006A, 10A, Engine and peripherals).

❑ Position the « engine-gearbox » assembly in the vehicle.

❑ Refit:

- the suspended engine mounting (see **19D**, **Engine mounting**, **Right-hand suspended engine mounting: Removal - Refitting**, page **19D-20**) ,
- the suspended gearbox mounting (see **19D**, **Engine mounting**, **Left-hand suspended engine mounting: Removal - Refitting**, page **19D-12**) ,
- the lower engine tie-bar (see **19D**, **Engine mounting**, **Lower engine tie-bar: Removal - Refitting**, page **19D-36**) ,
- the front right-hand driveshaft (see **Front right-hand wheel driveshaft: Removal - Refitting**) (29A, Driveshafts),
- the front left-hand driveshaft (see **Front left-hand wheel driveshaft: Removal - Refitting**) (29A, Driveshafts).

❑ Proceed in the reverse order to removal.

❑ Torque tighten:

- the **front end panel upper bolt (21 N.m)**,
- the **front end panel lower bolt (44 N.m)**,
- the **half-subframe front bolt (165 N.m)**,
- the **half-subframe rear bolt (21 N.m)**.

❑ Add the brake fluid to the brake fluid reservoir.

WARNING

In order not to damage the brake hose:

- do not tension the hose,
- do not twist the hose,
- check that there is no contact with the surrounding components.

❑ Refit the battery (see **Battery : Removal - Refitting**) (80A, Battery).

❑ Perform the following operations:

- bleed the clutch (see **Clutch circuit: Bleeding**) (37A, Mechanical component controls),

K9K, and 722 or 728

- fill up the gearbox oil (see **Manual gearbox oil: Draining - Refilling**) (21A, Manual gearbox),
- top up the engine oil (see **10A**, **Engine and cylinder block assembly**, **Engine oil: Draining - Refilling**, page **10A-43**) ,
- fill and bleed the coolant circuit (see **19A**, **Cooling**, **Cooling circuit: Draining - Refilling**, page **19A-15**) .

AIR CONDITIONING or CLIMATE CONTROL

❑ Fill the refrigerant circuit using the tool **refrigerant charging station** (see **Coolant circuit Draining - Refilling**) (62A, Air conditioning).

❑ Remove:

- the front bumper (see **Front bumper: Removal - Refitting**) (55A, Exterior protection),
- the front wheel arch liners (see **Front wheel arch liner: Removal - Refitting**) (55A, Exterior protection),
- the front wheels (see **Wheel: Removal - Refitting**) (35A, Wheels and tyres),
- the engine undertray,
- the engine covers.

B84 or C84 or E84 or K84 or L84, and M9R

Essential special tooling	
Mot. 1448	Long nose pliers for hose clips.
Mot. 1390	Support for removing/refitting the engine - gearbox assembly.

Essential equipment
refrigerant charging station
diagnostic tool

Tightening torques ▽	
swivel flange bolts	**21 N.m**
reinforcement lower cross member nuts	**62 N.m**

REMOVAL

I - REMOVAL PREPARATION OPERATION

❑ Position the vehicle on a two-post lift (see **Vehicle: Towing and lifting**) (02A, Lifting equipment).

❑ Remove:

- the engine cover,
- the battery (see **Battery: Removal - Refitting**) (80A, Battery),
- the front wheels (see **Wheel: Removal - Refitting**) (35A, Wheels and tyres),
- the front section of the front wheel arch liners (see **Front wheel arch liner: Removal - Refitting**) (55A, Exterior protection),
- the engine undertray bolts,
- the engine undertray,
- the front bumper (see **Front bumper: Removal - Refitting**) (55A, Exterior protection).

❑ Drain:

- the gearbox (see **Manual gearbox oil: Draining - Refilling**) (21A, Manual gearbox),
- the refrigerant fluid circuit using the **refrigerant charging station** (see **Coolant circuit Draining - Refilling**) (62A, Air conditioning).

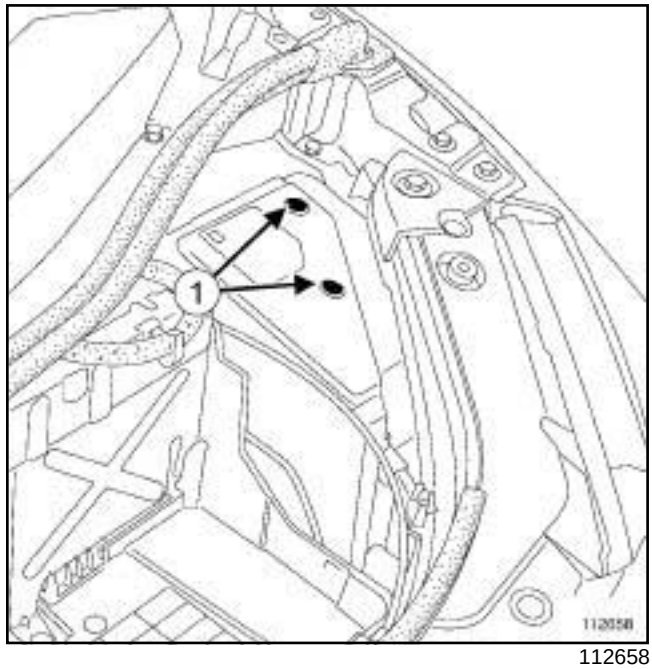

112658

❑ Remove:

- the engine accessories unit cover bolts (**1**) ,
- the engine accessories unit cover.

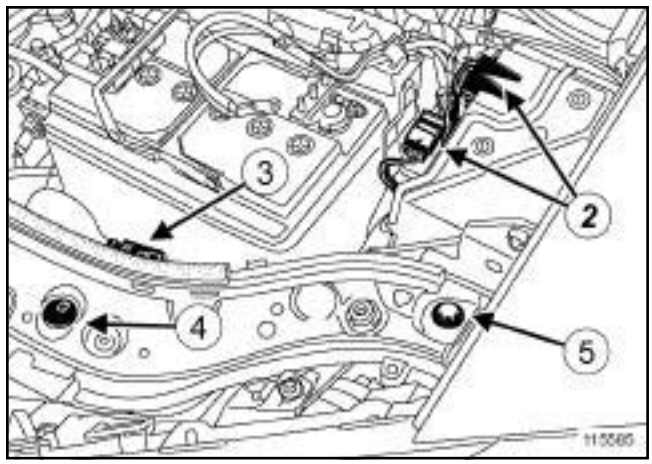

115585

❑ Disconnect the connectors (**2**) from the engine accessories unit.

❑ Unclip the bonnet release cable (**3**) .

❑ Remove:

- the front end panel clips (**4**) ,
- the upper bolts (**5**) from the front end panel,
- the fuse holder,
- the relay box.

❑ Remove the battery tray (see **Battery tray: Removal - Refitting**) (80A, Battery).

B84 or C84 or E84 or K84 or L84, and M9R

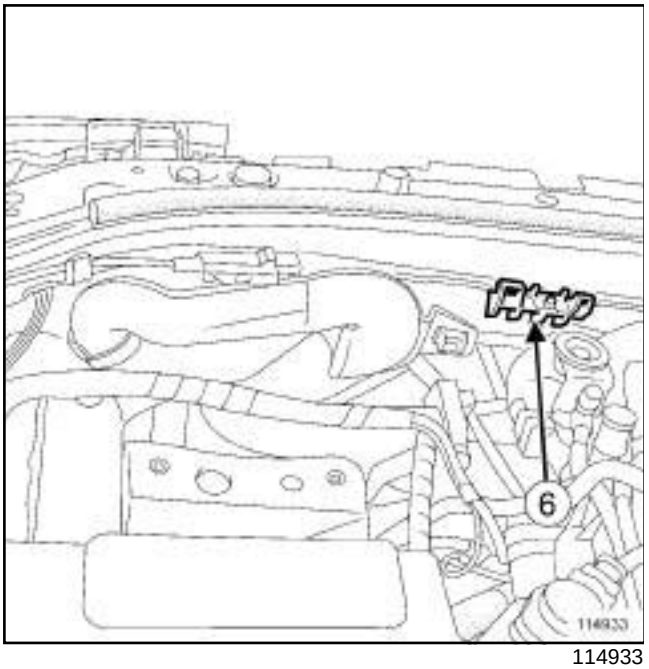

114933

❑ Unclip the air inlet scoop (**6**) .

❑ Remove the front impact cross member (see **Front impact cross member: Removal - Refitting**) (41A, Front lower structure).

❑ Drain the engine cooling system (see **19A**, **Cooling**, **Cooling circuit: Draining - Refilling**, page **19A-15**) .

❑ Remove the air resonator (see **12A**, **Fuel mixture**, **Air resonator: Removal - Refitting**, page **12A-8**) .

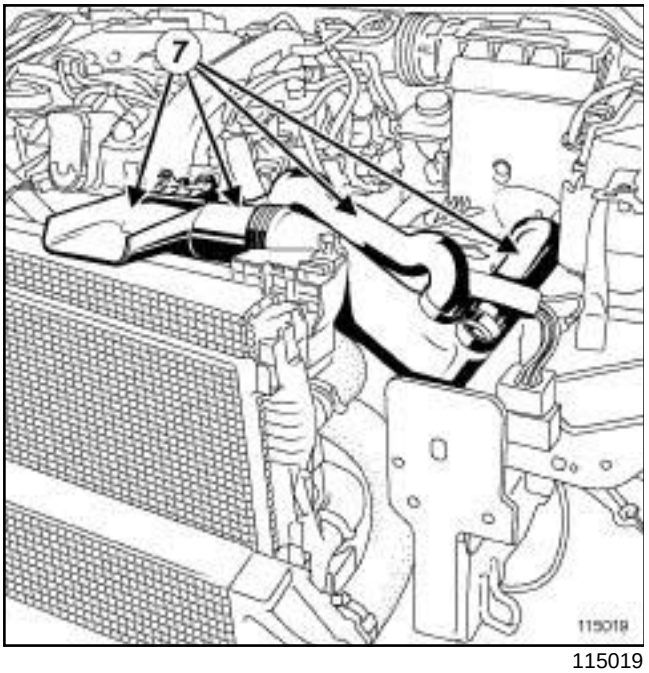

115019

❑ Remove:

- the air filter unit air inlet pipe (**7**) ,
- the air filter unit (see **12A**, **Fuel mixture**, **Air filter unit: Removal - Refitting**, page **12A-11**) .

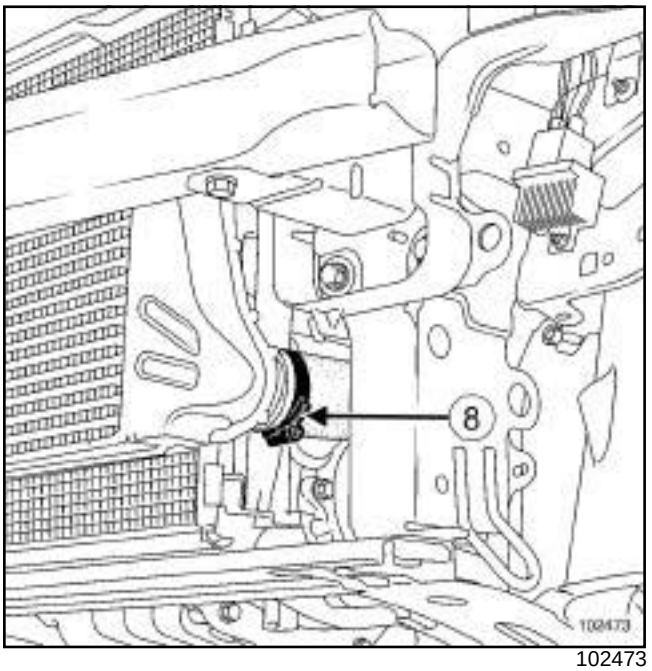

102473

❑ Loosen the clip (**8**) on the intercooler air inlet pipe.

❑ Disconnect the intercooler air inlet pipe.

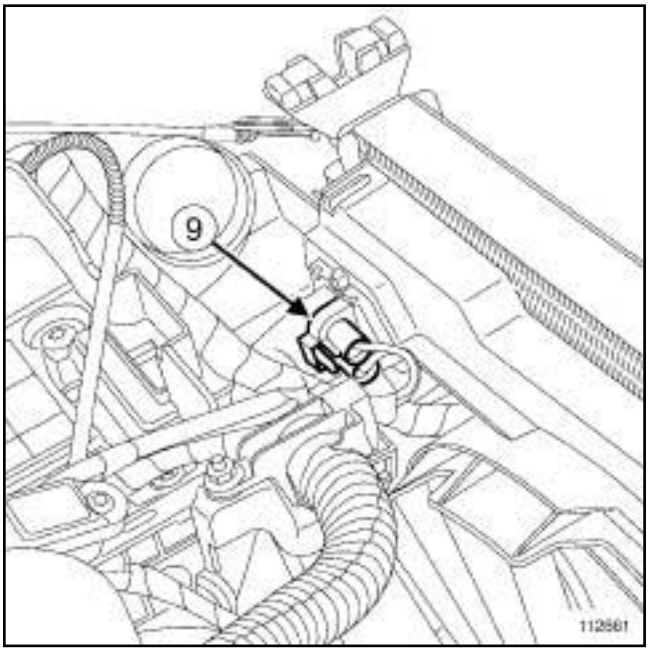

112661

❑ Disconnect:

- the fan assembly resistor connector (**9**) ,
- the motor-driven fan assembly connector.

❑ Unclip the blower unit wiring.

B84 or C84 or E84 or K84 or L84, and M9R

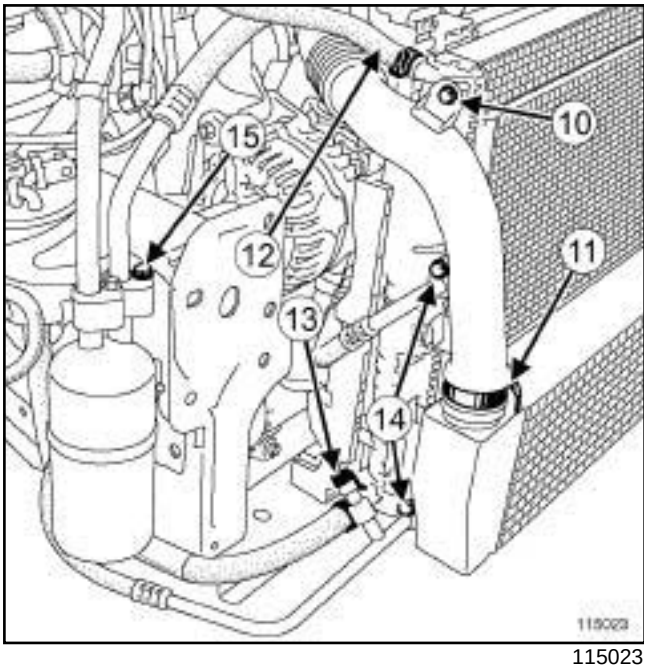

115023

❑ Remove the bolt (**10**) from the intercooler air outlet pipe on the cooling radiator.

❑ Undo:

- the clip (**11**) on the intercooler air outlet pipe,
- the clip of the intercooler air outlet pipe on the damper valve.

❑ Move the intercooler outlet air pipe to one side.

❑ Move aside the clips:

- of the cooling radiator top and bottom hose using the **(Mot. 1448)**,
- of the expansion bottle hose on the cooling radiator side (**12**) .

❑ Disconnect:

- the cooling radiator top and bottom hose,
- the expansion bottle hose on the cooling radiator side (**12**) ,
- the connector of the refrigerant pressure sensor on the lower connecting pipe of the condenser (**13**) .

❑ Unclip the refrigerant pressure sensor connector wiring on the fan assembly.

WARNING
In order to avoid any refrigerant leaks, do not damage (deform, twist, etc.) the pipe.

❑ Remove:

- the bolts (**14**) of the connecting pipes on the condenser,
- the connecting pipes on the condenser,
- the bolt (**15**) from the « compressor - dehydrator reservoir » connecting pipe,
- the « compressor - dehydrator reservoir» (**15**) connecting pipe.

WARNING
To prevent moisture from entering the system, place plugs on the cold loop components which are open to the air.

❑ Remove the cooling assembly.

❑ Disconnect:

- the fuel supply pipe,
- the fuel return pipe on the fuel filter,
- the return pipe.

IMPORTANT

During this operation, be sure to:

- refrain from smoking or bringing red hot objects close to the working area,
- be careful of fuel splashes when disconnecting the union.

❑ Fit plugs in the fuel pipe openings (see **13B**, **Diesel injection**, **Diesel injection: Precautions for repair**, page **13B-12**) .

B84 or C84 or E84 or K84 or L84, and M9R

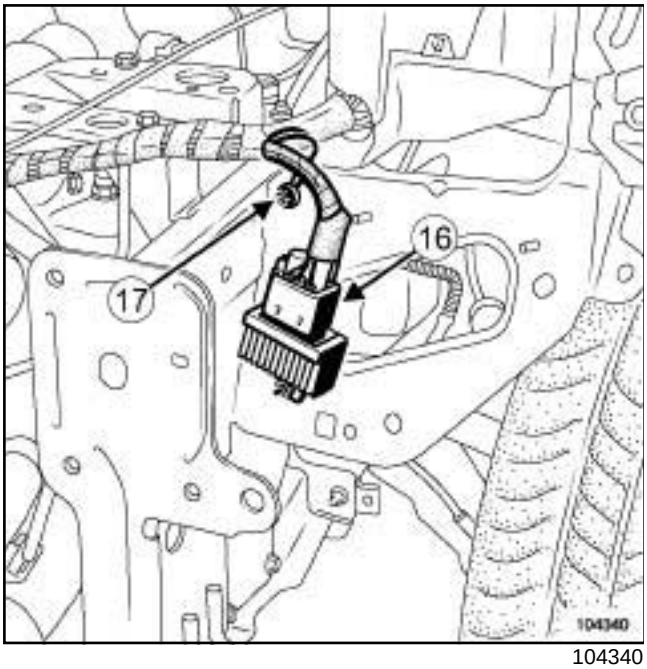

104340

- ❑ Disconnect the pre-postheating unit connector (**16**) .
- ❑ Remove:
  - the bolt (**17**) of the earth strap on the body,
  - the earth strap on the body,

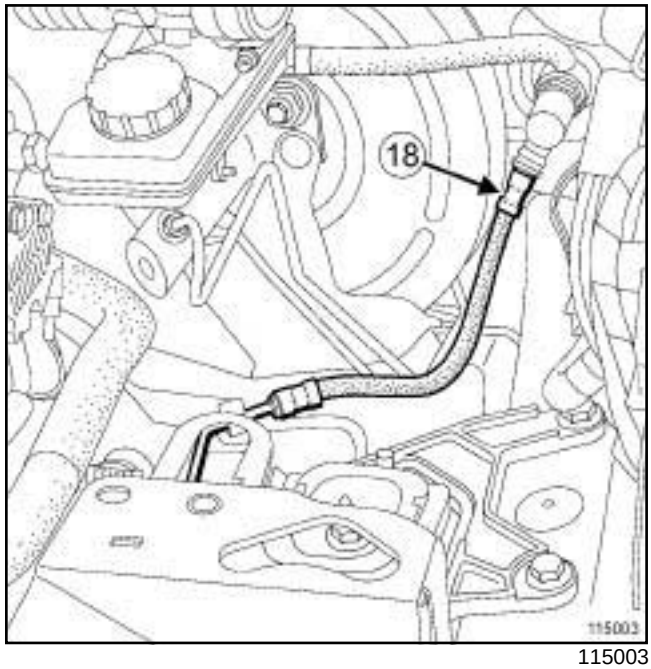

115003

- ❑ Remove the hose (**18**) of the clutch hydraulic control at the bulkhead.
- ❑ Remove the brake assistance pipe from the vacuum pump.
- ❑ Disconnect:
  - the heater radiator hose from the water chamber using the **(Mot. 1448)**,
  - the heater radiator hose from the water chamber using the **(Mot. 1448)**.

B84 or C84 or E84 or K84 or L84, and M9R

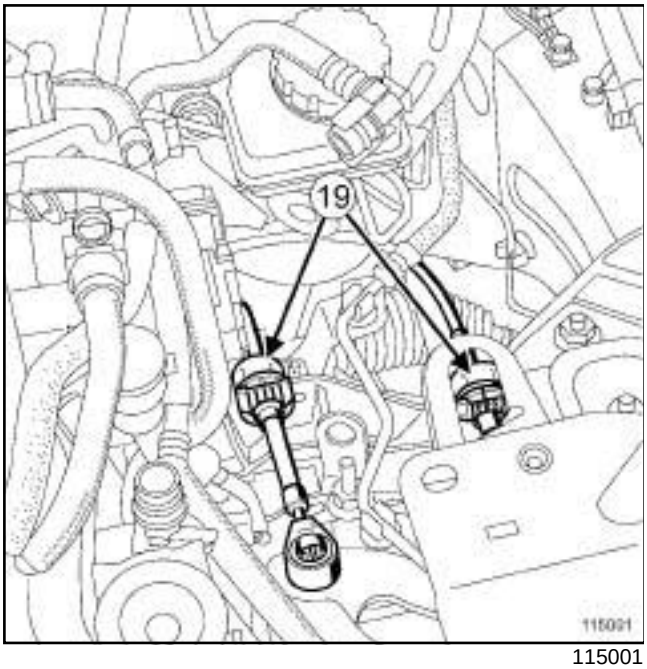

115001

CLIP TYPE

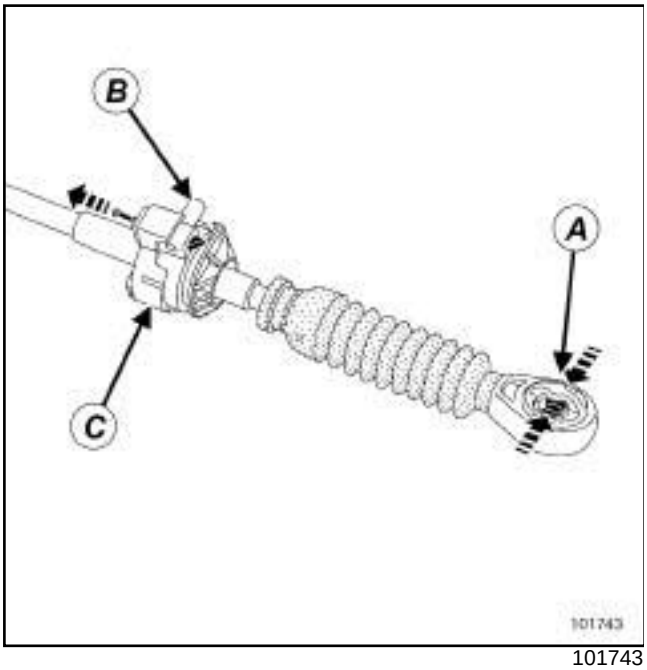

101743

❑ Remove the gearbox controls (**19**) .

❑ Clip type:

- press the clips at (**A**) and uncouple the control lever cable from the gearbox,
- pull the pin at (**B**) ,
- detach the cable from the cable sleeve stop, lifting at (**C**) .

PUSHROD TYPE

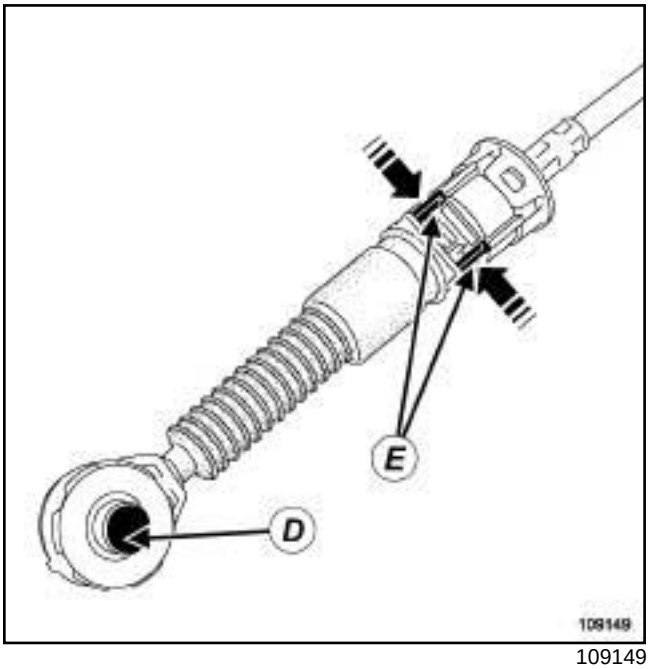

109149

❑ Pushrod type:

- press the pushrod at (**D**) and detach the cable end piece **by hand**,
- press the lugs at (**E**) to detach the cable from the cable sleeve stop.

> Note:
>
> Do not remove the cable end piece by levering underneath it, to avoid damaging the cable and the lever ball joint.

❑ Remove the lower engine tie-bar (see **19D**, **Engine mounting**, **Lower engine tie-bar: Removal - Refitting**, page **19D-36**) .

B84 or C84 or E84 or K84 or L84, and M9R

M9R, and 724

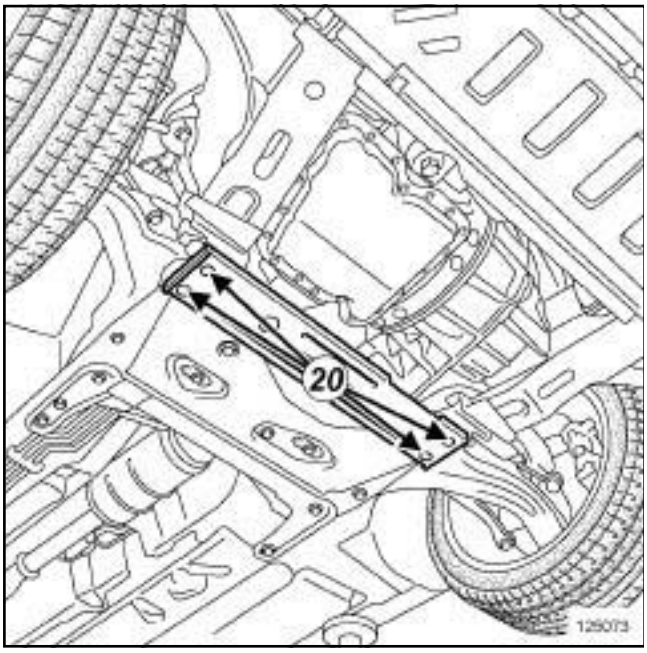

125073

❑ Remove:

- the reinforcement lower cross member nuts (**20**) ,
- the reinforcement lower cross member.

M9R, and 722 or 724

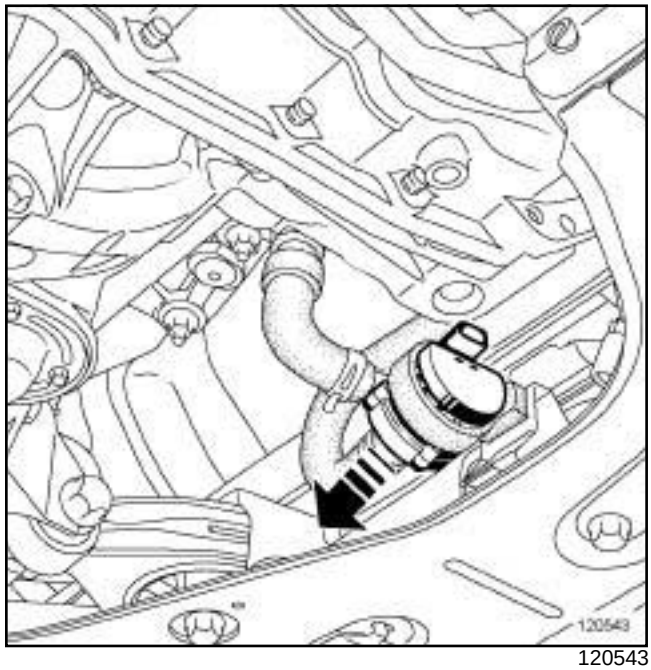

120543

❑ Remove the electric coolant pump from its mounting.

❑ Remove the radiator mounting cross member (see **Radiator support cross member: Removal - Refitting**) (41A, Front lower structure).

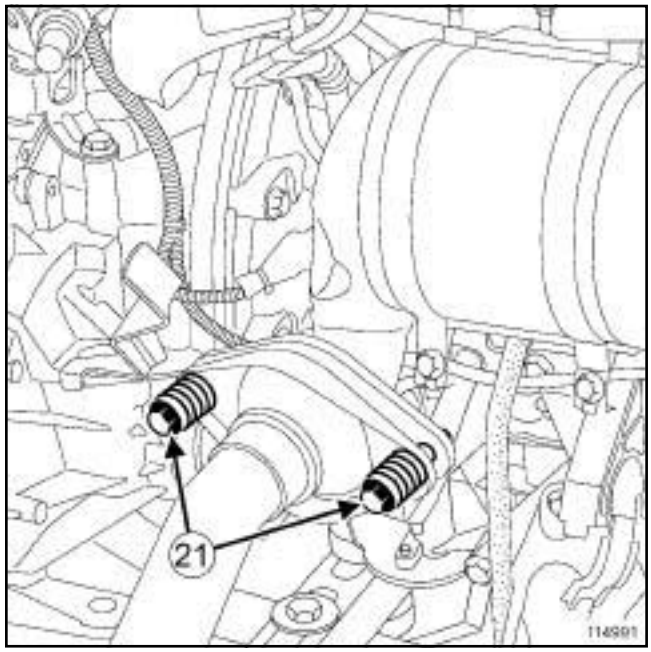

114991

❑ Remove:

- the swivel flange bolts (**21**) ,

B84 or C84 or E84 or K84 or L84, and M9R

- the swivel flange springs,
- the front right-hand driveshaft (see **Front right-hand wheel driveshaft: Removal - Refitting**) (29A, Driveshafts),
- the front left-hand driveshaft (see **Front left-hand wheel driveshaft: Removal - Refitting**) (29A, Driveshafts).

II - OPERATION FOR REMOVAL OF PART CONCERNED

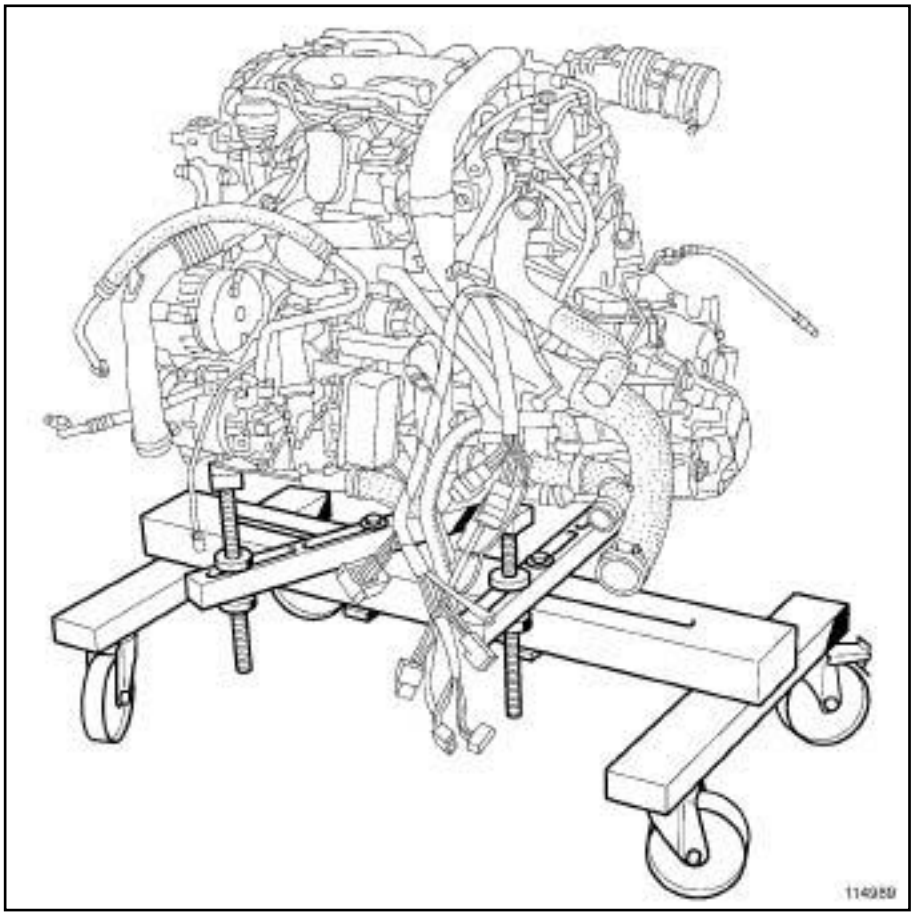

114989

❑ Position the **(Mot. 1390)**.

❑ Remove:

- the right-hand suspended engine mounting (see **19D**, **Engine mounting**, **Right-hand suspended engine mounting: Removal - Refitting**, page **19D-20**) ,
- the left-hand suspended engine mounting nut (see **19D**, **Engine mounting**, **Left-hand suspended engine mounting: Removal - Refitting**, page **19D-12**) .

❑ Pivot the « engine - gearbox » assembly.

❑ Remove the « engine and gearbox » assembly.

B84 or C84 or E84 or K84 or L84, and M9R

REFITTING

I - REFITTING PREPARATION OPERATION

If replacing the engine

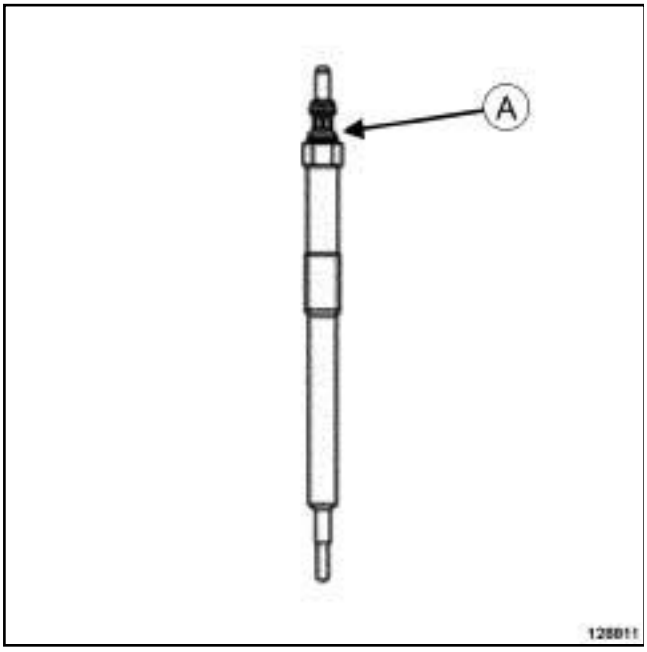

128811

❑

> **WARNING**
> Failure to observe the following procedure can lead to the destruction of the heater plugs.

❑ If replacing the engine, check the colour of the ring (**A**) on the heater plugs of the removed engine.

❑ If the ring is **black**, before reconnecting the connectors of the heater plugs:

- reprogram the injection computer (see **Fault finding - Replacement of components**) (13B, Diesel injection),
- reconfigure the type of heater plugs to the « quick » type (see **Fault finding - Replacement of components**) (13B, Diesel injection).

> Note:
> The Parts Department only supplies engines equipped with heater plugs that have a **white** ring.

II - REFITTING OPERATION FOR PART CONCERNED

❑ Position:

- the right-hand suspended engine mounting in its housing,
- the « engine - gearbox » assembly in the vehicle.

❑ Refit:

- the right-hand suspended engine mounting (see **19D**, **Engine mounting**, **Right-hand suspended engine mounting: Removal - Refitting**, page **19D-20**) ,
- the left-hand suspended engine mounting nut (see **19D**, **Engine mounting**, **Left-hand suspended engine mounting: Removal - Refitting**, page **19D-12**) .

III - FINAL OPERATION

❑ Refit:

- the front left-hand driveshaft (see **Front left-hand wheel driveshaft: Removal - Refitting**) (29A, Driveshafts),
- the front right-hand driveshaft (see **Front right-hand wheel driveshaft: Removal - Refitting**) (29A, Driveshafts),
- the swivel flange springs,
- the swivel flange bolts.

❑ Torque tighten the **swivel flange bolts (21 N.m)**.

❑ Refit:

- the radiator mounting cross member (see **Radiator support cross member: Removal - Refitting**) (41A, Front lower structure).

M9R, and 722 or 724

❑ Fit the electric coolant pump onto its mounting.

B84 or C84 or E84 or K84 or L84, and M9R

M9R, and 724

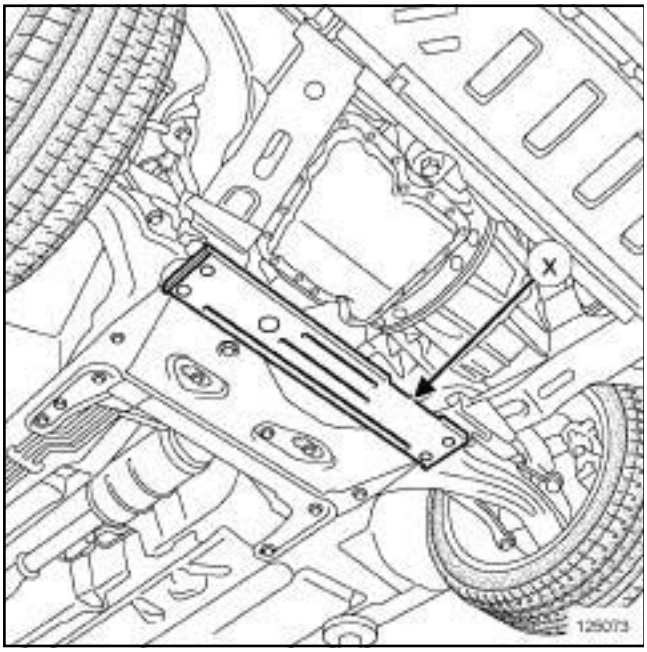

125073

❑

Note:

Position the indent (**x**) of the reinforcement lower cross member on the gearbox side.

❑ Refit:

- the reinforcement lower cross member,
- the reinforcement lower cross member nuts.

❑ Torque tighten the **reinforcement lower cross member nuts (62 N.m)**.

❑ Refit:

- the lower engine tie-bar (see **19D**, **Engine mounting**, **Lower engine tie-bar: Removal - Refitting**, page **19D-36**) ,
- the gear levers,
- the earth strap on the body shell,
- the nut of the earth strap on the body.

❑ Connect:

- the pre-postheating unit connector ,
- the brake servo pipe from the vacuum pump,
- the hose of the clutch hydraulic control at the bulkhead,
- the heater radiator hose from the water chamber using the **(Mot. 1448)**,
- the heater radiator hose from the water chamber using the **(Mot. 1448)**.

❑ Remove the plugs from the fuel pipe openings.

❑ Refit:

- the fuel supply pipe,
- the fuel return pipe on the fuel filter,
- the return pipe,
- the cooling assembly.

❑ Connect the cooling radiator bottom and top hose using the **(Mot. 1448)**.

❑ Refit:

- the intercooler air outlet pipe bolt,
- the intercooler air outlet pipe on the damper valve,
- the clip of the intercooler air outlet pipe on the damper valve,
- the intercooler air outlet pipe,
- the air pipe clip at the intercooler outlet.

❑ Remove the plugs from the cold loop openings.

❑ Refit:

- the connecting pipes on the condenser,
- the bolts of the connecting pipes on the condenser,
- the « compressor - dehydrator reservoir » connecting pipe,
- the bolt on the « compressor - dehydrator reservoir » connecting pipe.

❑ Clip the refrigerant pressure sensor connector wiring on the fan assembly.

❑ Connect:

- the cooling radiator top and bottom hose using the **(Mot. 1448)**,
- the expansion bottle hose on the cooling radiator side.

❑ Move aside the clips:

- the cooling radiator top and bottom hose using the **(Mot. 1448)**,
- of the expansion bottle hose on the cooling radiator side.

❑ Connect:

- the connector of the refrigerant pressure sensor on the lower connecting pipe of the condenser,
- the fan assembly resistor connector,

B84 or C84 or E84 or K84 or L84, and M9R

- the motor-driven fan assembly connector.

❏ Clip the fan assembly wiring harness.

❏ Refit:

- the intercooler air inlet pipe,
- the intercooler air inlet pipe clip,
- the engine accessories unit bolt,
- the air filter unit air inlet pipe,
- the air filter unit (see **12A**, **Fuel mixture**, **Air filter unit: Removal - Refitting**, page **12A-11**) ,
- the air resonator (see **12A**, **Fuel mixture**, **Air resonator: Removal - Refitting**, page **12A-8**) ,
- the front impact cross member (see **Front impact cross member: Removal - Refitting**) (41A, Front lower structure).

❏ Clip on the air inlet scoop.

❏ Refit:

- the battery tray (see **Battery tray: Removal - Refitting**) (80A, Battery).

❏ Connect the computer connectors.

❏ Refit:

- the relay box,
- the fuse holder,
- the front end panel upper bolts,
- the front end panel clips.

❏ Clip on the bonnet release cable.

❏ Connect the engine accessories unit connectors.

❏ Perform the following operations:

- bleed the clutch (see **Clutch circuit: Bleeding**) (37A, Mechanical component controls),
- fill up the gearbox oil (see **Manual gearbox oil: Draining - Refilling**) (21A, Manual gearbox),
- fill up the engine oil if necessary (see **10A**, **Engine and cylinder block assembly**, **Engine oil: Draining - Refilling**, page **10A-43**) ,
- fill the refrigerant circuit using the **refrigerant charging station** (see **Coolant circuit Draining - Refilling**) (62A, Air conditioning).

❏ check the refrigerant circuit for leaks (see **Coolant circuit check**) (62A, Air conditioning).

❏ Refit:

- the front bumper (see **Front bumper: Removal - Refitting**) (55A, Exterior protection),
- the engine undertray,
- the front section of the front wheel arch liners (see **Front wheel arch liner: Removal - Refitting**) (55A, Exterior protection),
- the front wheels (see **Wheel: Removal - Refitting**) (35A, Wheels and tyres),
- the battery (see **Battery: Removal - Refitting**) (80A, Battery),

WARNING

Failure to observe the following procedure can lead to the destruction of the heater plugs.

❏ If replacing an engine equipped with heater plugs with a **black** ring by an engine equipped with heater plugs with a **white** ring:

- connect the **diagnostic tool**,
- reprogram the injection computer (see **Fault finding - Replacement of components**) (13B, Diesel injection),
- reconfigure the type of heater plugs to « quick » type (see **Fault finding - Replacement of components**) (13B, Diesel injection),
- disconnect the **diagnostic tool**,
- reconnect the heater plug connectors.

❏ Refit the engine cover.

❏ Fill and bleed the cooling system (see **19A**, **Cooling**, **Cooling circuit: Draining - Refilling**, page **19A-15**) .

F4R, and 770 or 771 or 776

Essential special tooling	
Car. 1363	Set of trim removal levers.
Mot. 1202-01	Pliers for large hose clips.
Mot. 1202-02	Pliers for small hose clips.
Mot. 1448	Long nose pliers for hose clips.

Essential equipment
refrigerant charging station
workshop hoist
load balancer

Tightening torques ▽	
front end panel upper bolts	**21 N.m**
front end panel lower bolts	**44 N.m**
half subframe front mounting bolt	**105 N.m**
half subframe rear mounting bolt	**21 N.m**

Note:

Procedure for removing the air inlet duct on the intercooler (F4R 776):

- detach the hose using tool **(Car. 1363)**,
- do not use a degreaser, brake cleaning product, or any other product,
- clean the bearing face on the intercooler and on the hose with a dry, lint-free cloth,
- refit the clip in the same position in the event that the hose is not replaced,
- it is essential to replace the hose and/or the intercooler if they are damaged.

REMOVAL

❑ Position the vehicle on a two-post lift (see **Vehicle: Towing and lifting**) (02A, Lifting equipment).

❑ Remove:

- the engine covers,
- the front wheels (see **Wheel: Removal - Refitting**) (35A, Wheels and tyres),
- the front wheel arch liners (see **Front wheel arch liner: Removal - Refitting**) (55A, Exterior protection),
- the engine undertray.

❑ Drain:

- the gearbox (see **Manual gearbox oil: Draining - Refilling**) (21A, Manual gearbox),
- the engine (see **10A**, **Engine and cylinder block assembly**, **Engine oil: Draining - Refilling**, page **10A-43**) .

❑ Disconnect the battery (see **Battery : Removal - Refitting**) (80A, Battery).

AIR CONDITIONING or CLIMATE CONTROL

❑ Drain the refrigerant circuit using a **refrigerant charging station** (see **Coolant circuit Draining - Refilling**) (62A, Air conditioning).

F4R, and 770 or 771 or 776

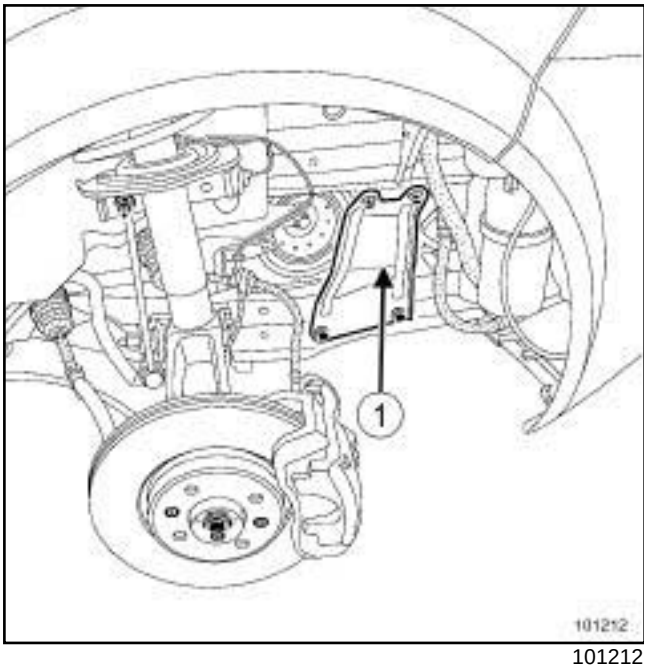

101212

❑ Remove:

- the battery (see **Battery: Removal - Refitting**) (80A, Battery),
- the side stiffeners (**1**) from the half-sub-frame,
- the front bumper (see **Front bumper: Removal - Refitting**) (55A, Exterior protection).

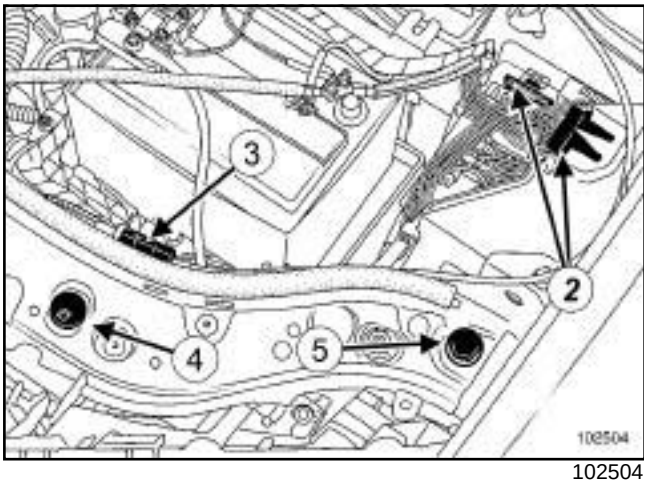

102504

❑ Disconnect the connectors (**2**) .

❑ Unfasten the bonnet opening cable (**3**) .

❑ Remove:

- the clip (**4**) ,
- the mounting (**5**) .

❑ Disconnect the screen washer pipes.

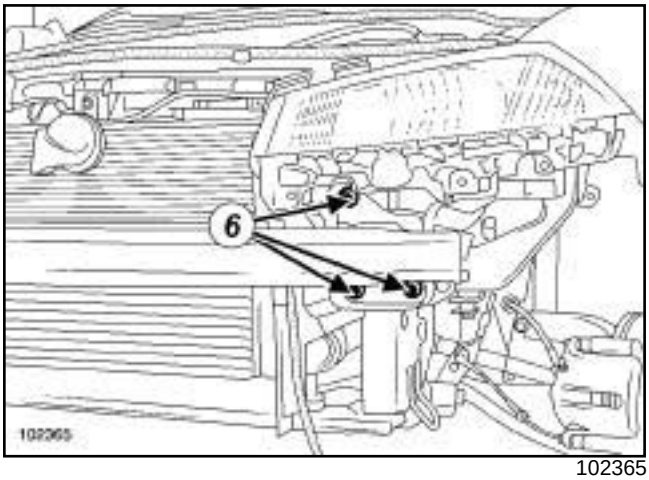

102365

❑ Remove:

- the front end panel bolts (**6**) ,
- the front of the vehicle.

❑ Drain the engine cooling system (see **19A**, **Cooling**, **Cooling circuit: Draining - Refilling**, page **19A-15**) .

F4R, and 770 or 771

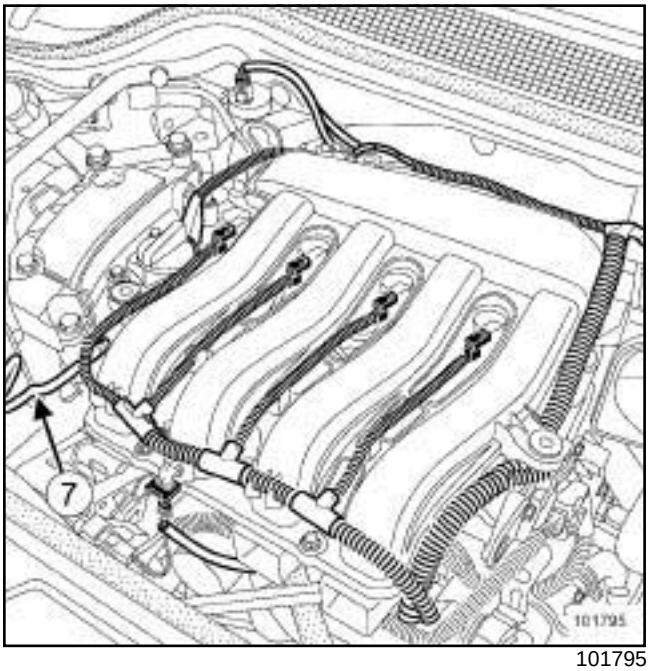

101795

❑ Disconnect the fuel supply pipe (**7**) from the injector rail.

F4R, and 770 or 771 or 776

F4R, and 776

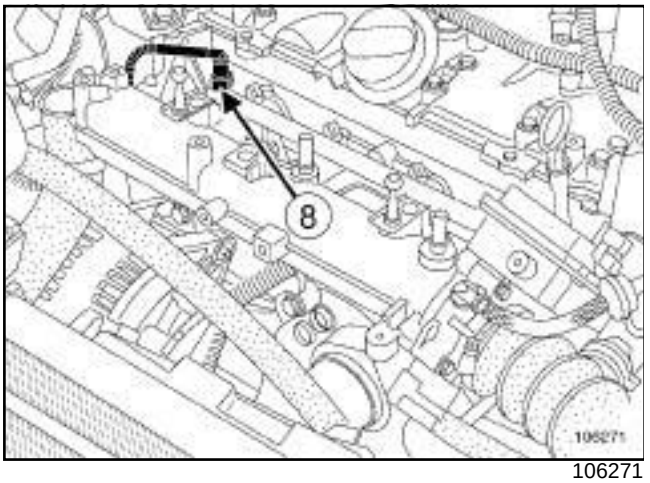

106271

❑ Disconnect:

- the fuel supply pipe (**8**) from the injector rail,
- the cooling radiator top pipe using the tool **(Mot. 1202-01)** or **(Mot. 1202-02)** or **(Mot. 1448)**,
- the fan assembly connectors.

❑ Unclip the electrical wiring from the fan assembly.

F4R, and 776

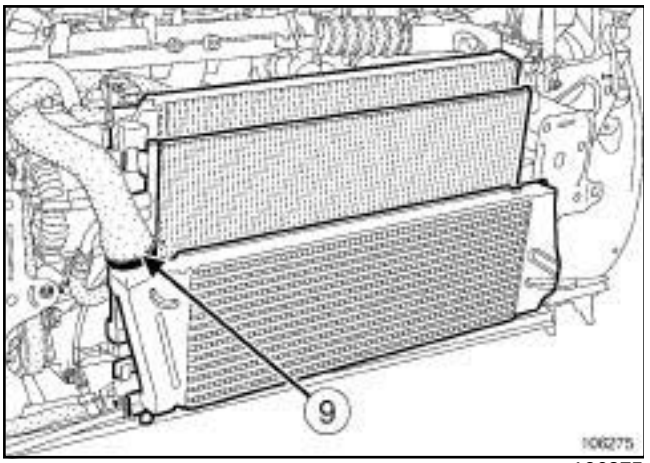

106275

❑ Disconnect the intercooler hose (**9**) .

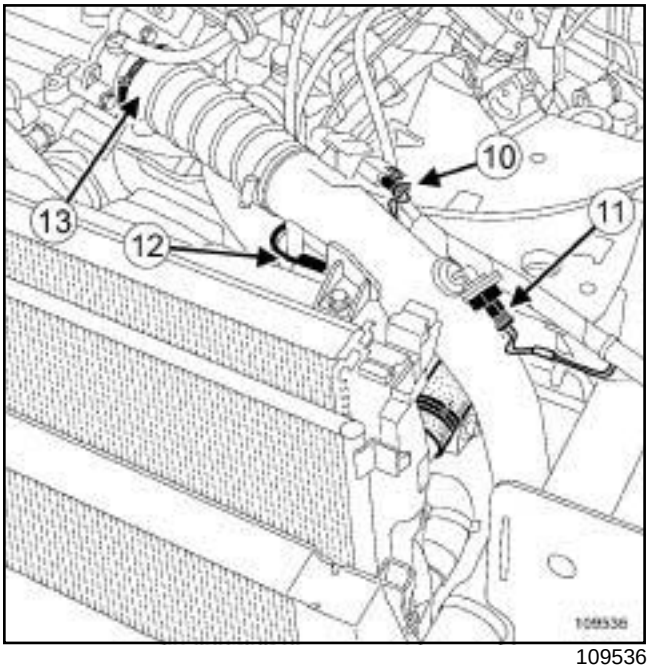

109536

❑ Disconnect:

- the turbocharging pressure sensor connector (**10**) ,
- the air temperature sensor connector (**11**) ,
- the fan assembly resistor connector (**12**) .

❑ Remove the air duct (**13**) .

F4R, and 770 or 771

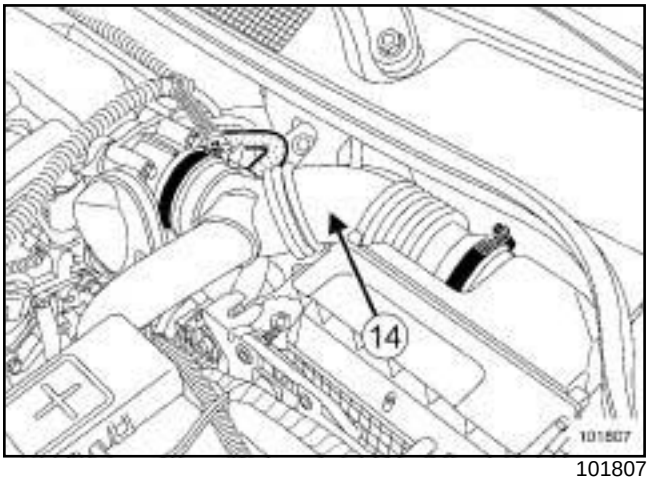

101807

❑ Remove the air filter outlet duct (**14**) .

F4R, and 770 or 771 or 776

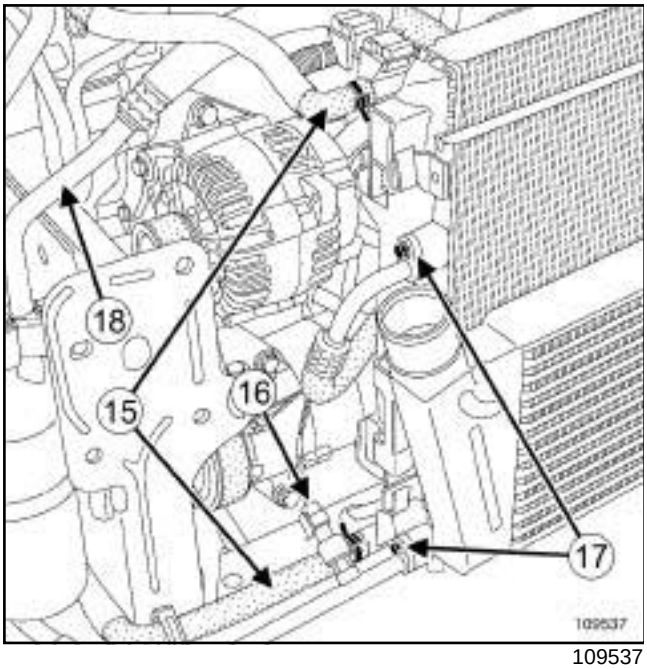

109537

❑ Disconnect the hoses from the cooling radiator expansion bottle (**15**) .

AIR CONDITIONING or CLIMATE CONTROL

❑ Disconnect the pressostat connector on the lower air conditioning pipe from the condenser ***(16)*** .

❑ Remove:

- the air conditioning pipes from the condenser ***(17)*** ,
- the air conditioning pipe between the compressor and the dehydrator reservoir ***(18)*** .

WARNING

To prevent moisture from entering the system, place plugs on the cold loop components which are open to the air.

❑ Remove the cooling assembly.

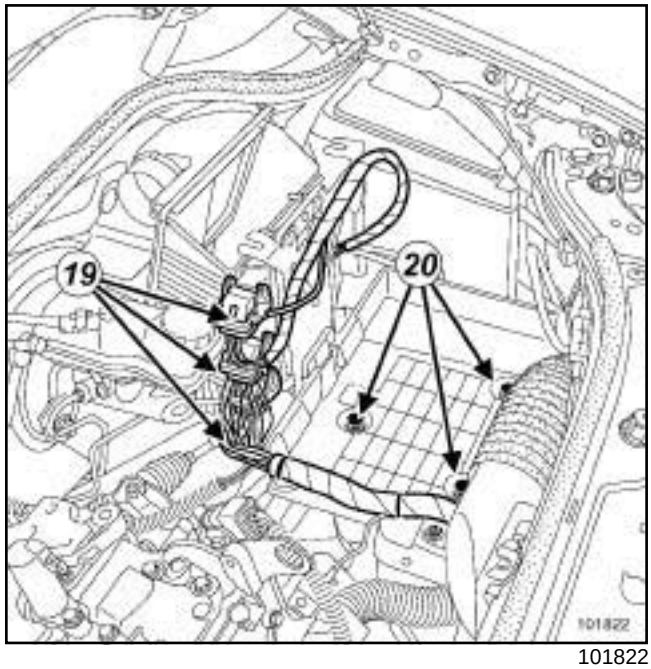

101822

❑ Disconnect the computer connectors (**19**) .

❑ Remove the bolts (**20**) from the battery tray.

❑ Remove the battery tray.

F4R, and 770 or 771 or 776

F4R, and 776

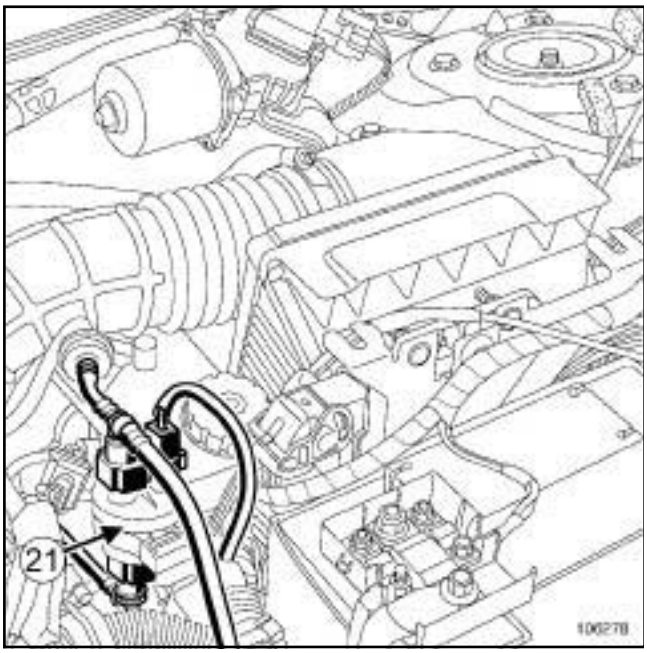

106278

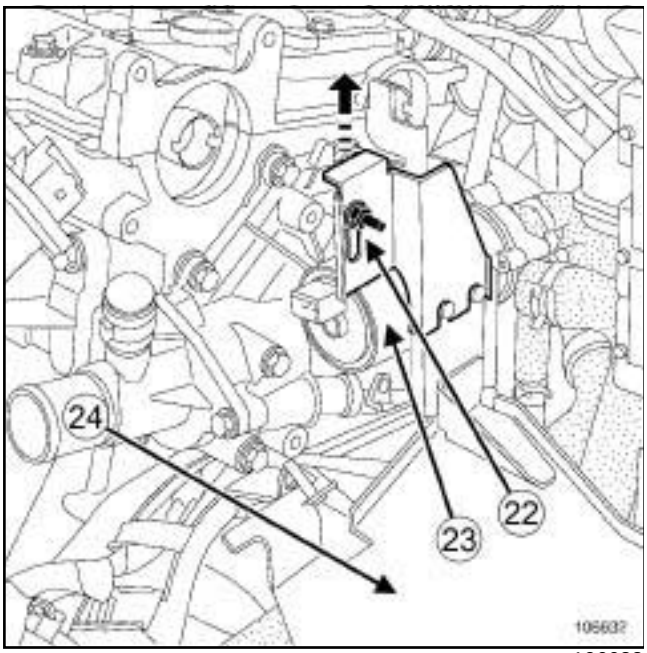

106632

- ❑ Move the fuel vapour recirculation solenoid valve to one side (**21**) .
- ❑ Undo the bolt (**22**) .
- ❑ Pull the mounting bracket away from the electric coolant pump.
- ❑ Move aside the electric coolant pump (**23**) .
- ❑ Remove the electric pump mounting (**24**) .

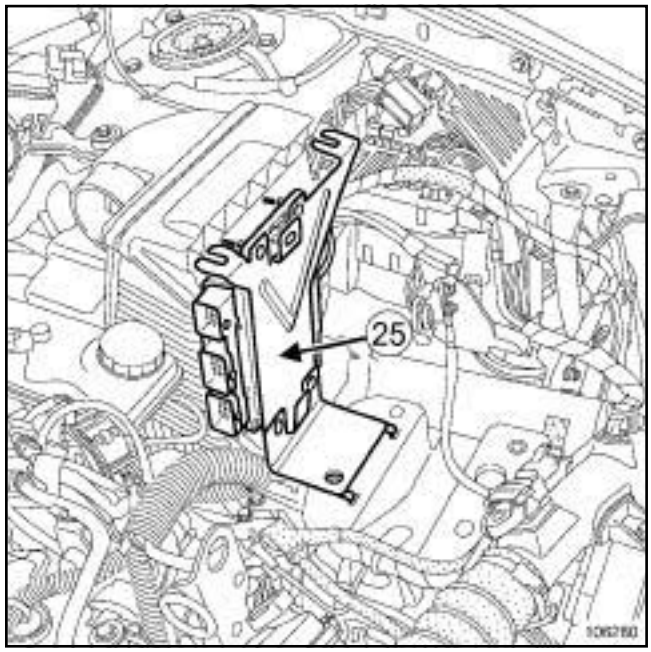

106280

- ❑ Remove the computer and its mounting (**25**) .

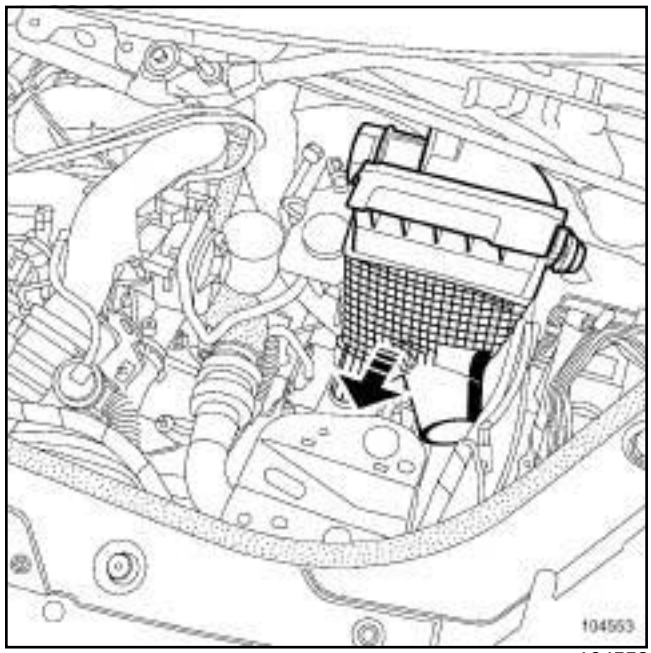

104553

- ❑ Remove the air filter unit.

F4R, and 770 or 771 or 776

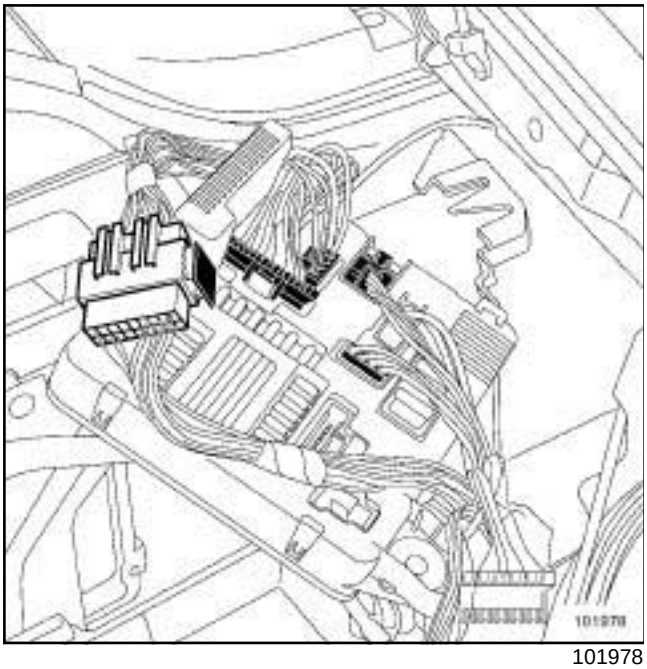

101978

❑ Disconnect the connectors from the relay plate wiring.

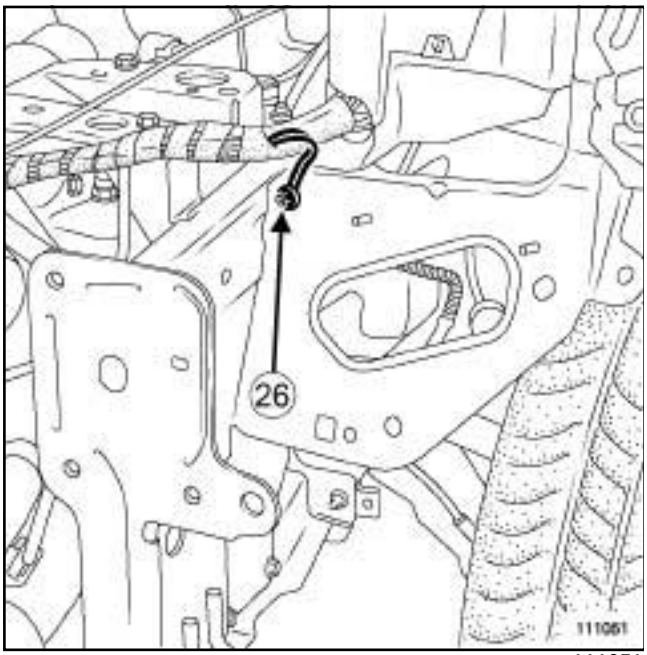

111051

❑ Remove the earth terminals (**26**) .

F4R, and 770 or 771

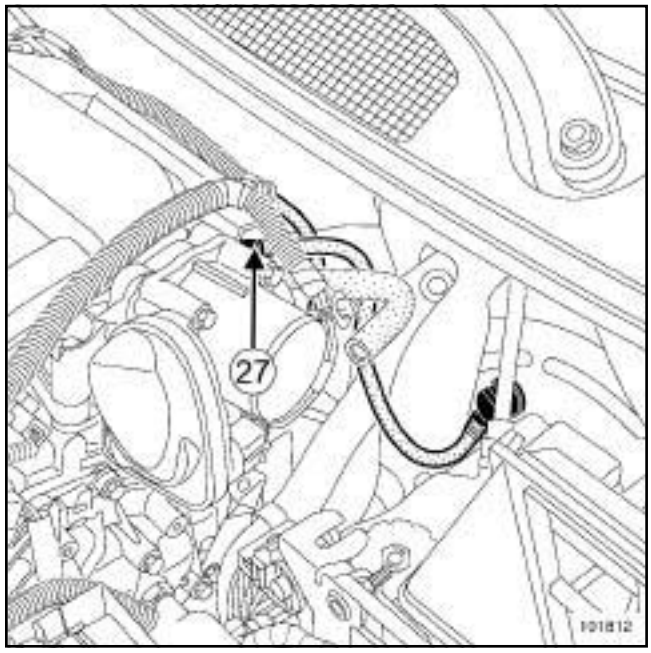

101812

❑ Remove the brake servo hose (**27**) .

❑ Disconnect the downstream oxygen sensor connector.

F4R, and 776

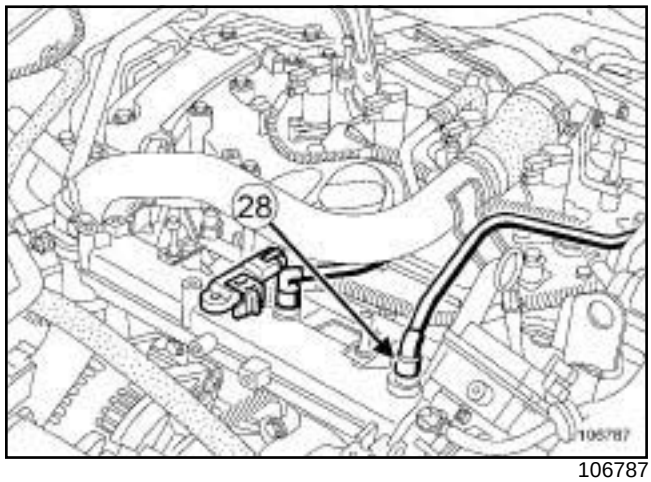

106787

❑ Remove the brake servo hose (**28**) .

F4R, and 770 or 771 or 776

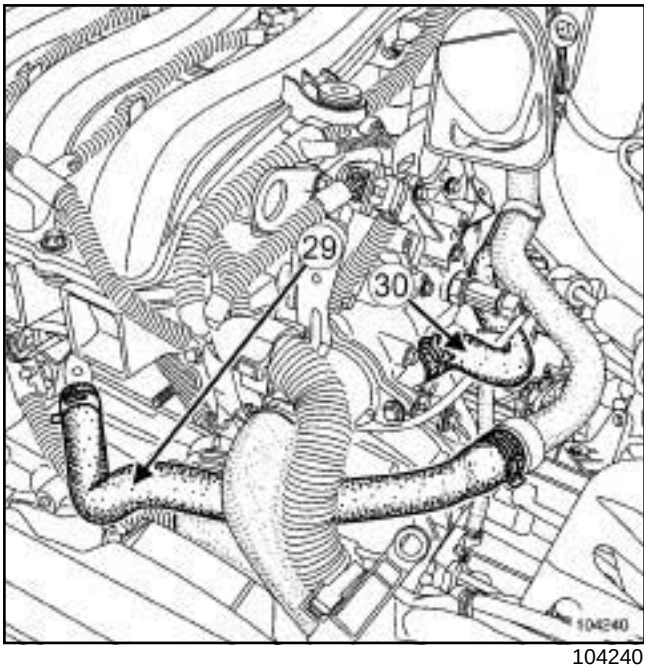

104240

❑ Disconnect the pipes (**29**) and (**30**) using the tool **(Mot. 1202-01)** or **(Mot. 1202-02)** or **(Mot. 1448)**.

F4R, and 770 or 776

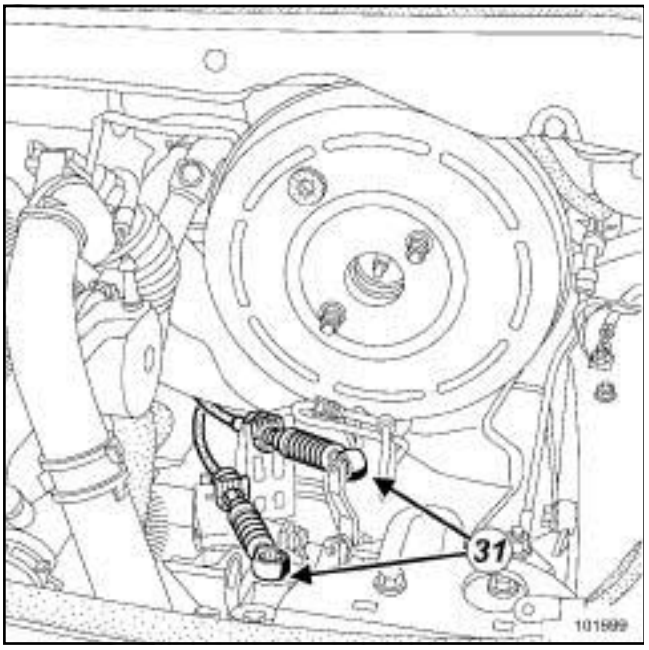

101699

❑ Remove the gearbox control cables (**31**) .

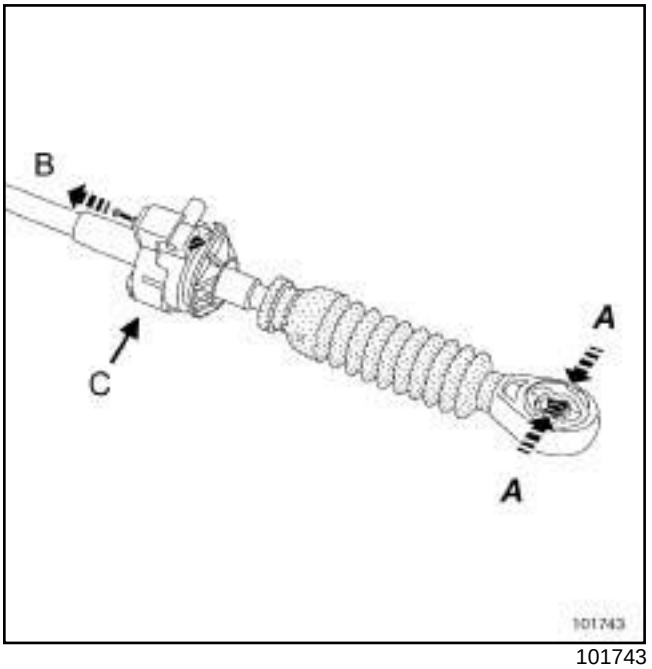

101743

❑ Unclip the two gear lever cables on the gearbox:

- grip the gearbox control at (**A**) ,
- pull the pin at (**B**) ,
- raise the gearbox control at (**C**) .

F4R, and 771

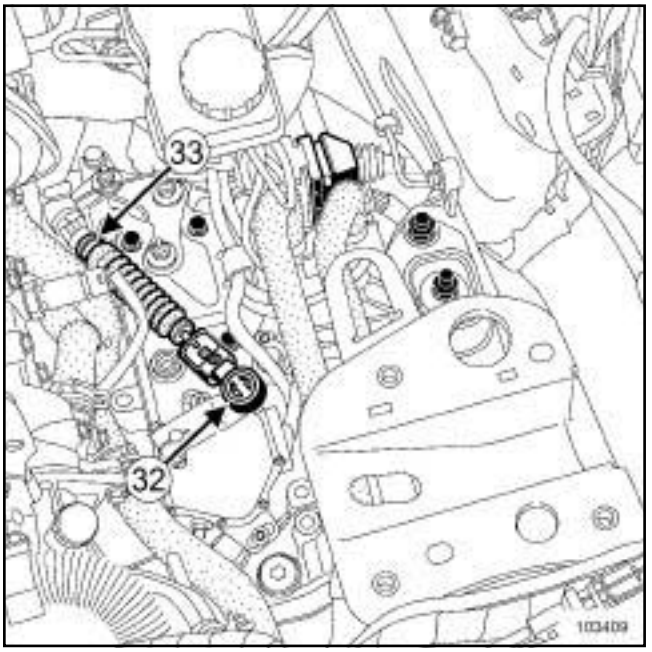

103409

❑ Remove:

- the multifunction switch cable ball joint (**32**) ,

F4R, and 770 or 771 or 776

- the multifunction switch cable (**33**) by loosening the sleeve stop.

F4R, and 770 or 776

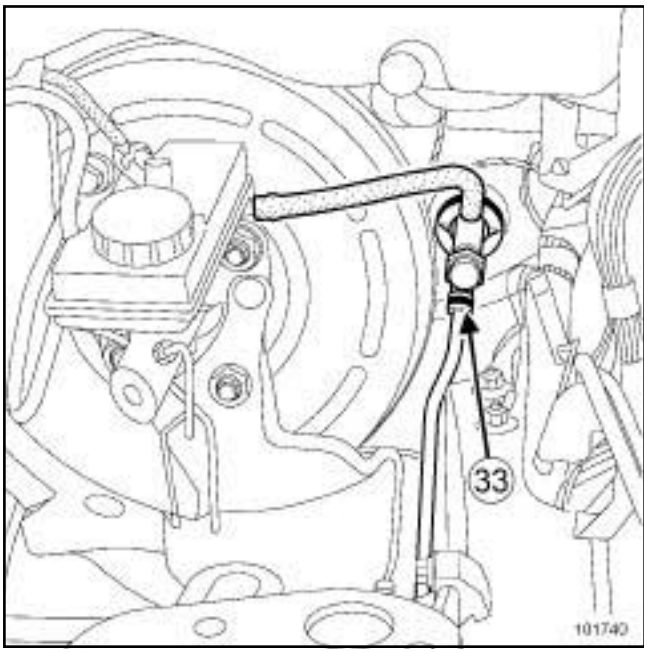

101740

❏ Place a cloth under the master cylinder.

❏ Remove the clip (**33**) from the union on the master cylinder return.

❏ Disconnect the pipes from the slave cylinder.

❏ Fit plugs into the openings.

❏ Withdraw the slave cylinder supply pipe.

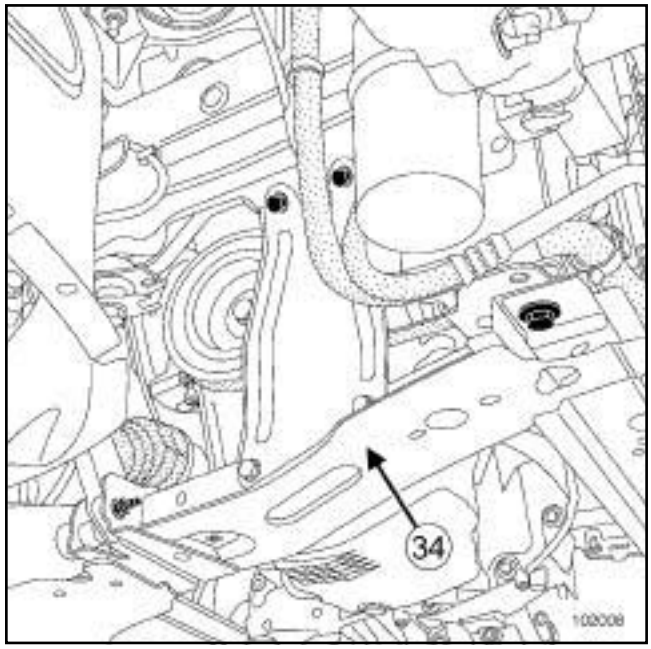

102008

❏ Remove:

- the front right-hand driveshaft (see **Front right-hand wheel driveshaft: Removal - Refitting**) (29A, Driveshafts),
- the front left-hand driveshaft (see **Front left-hand wheel driveshaft: Removal - Refitting**) (29A, Driveshafts),
- the exhaust downpipe mountings,
- the lower engine tie-bar,
- the upper engine tie-bar,
- the half-subframe (**34**) .

❏ Position the **workshop hoist** fitted with a **load balancer** or a chain.

F4R, and 770 or 771 or 776

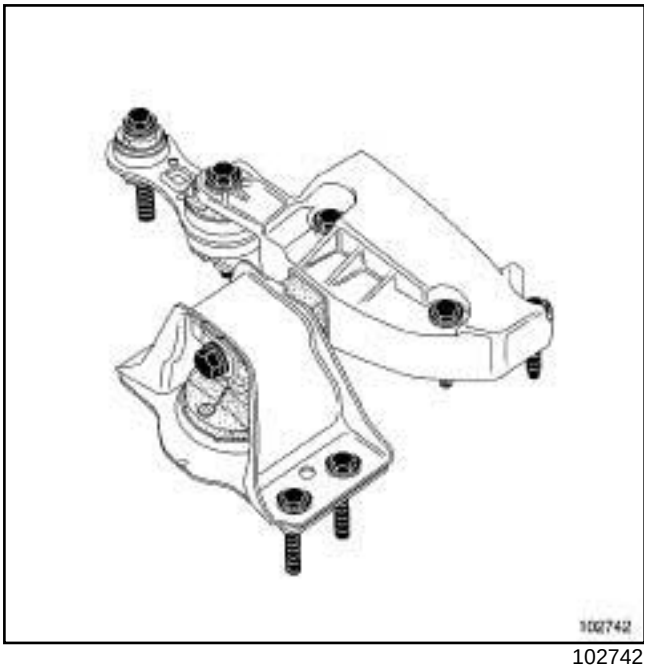

102742

❑ Mark the suspended engine mounting in relation to the body.

❑ Remove the suspended engine mounting.

F4R, and 770 or 776

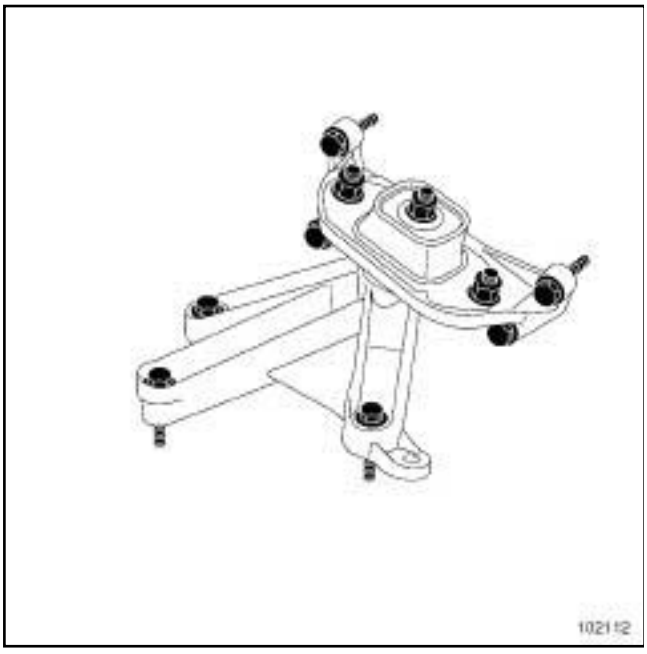

102112

❑ Remove the suspended engine mounting from the gearbox.

F4R, and 771

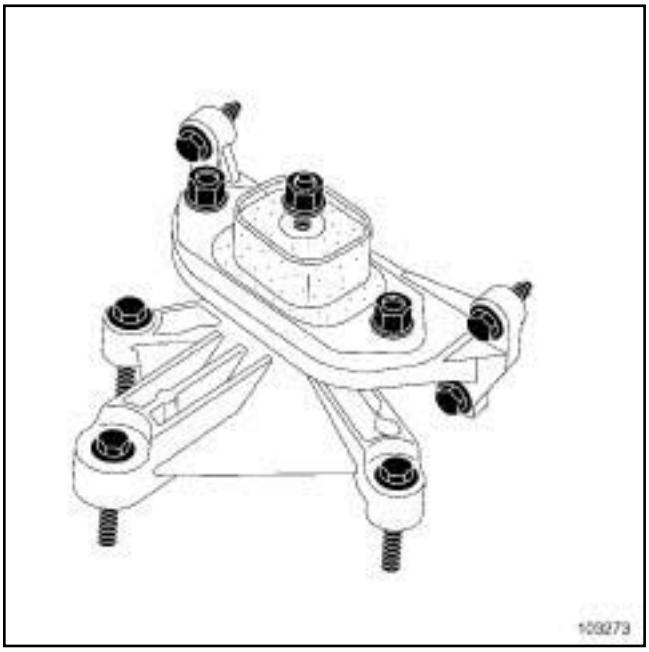

103273

❑ Remove the suspended engine mounting from the gearbox.

❑ Turn the « engine - gearbox » assembly to remove it.

REFITTING

❑ If replacing the engine (see **Standard replacement**) (Technical Note 6027A, 10A, Engine and peripherals).

❑ Position the « engine-gearbox » assembly in the vehicle.

❑ Refit:

- the suspended engine mounting (see **19D**, **Engine mounting**, **Right-hand suspended engine mounting: Removal - Refitting**, page **19D-20**) according to the marks,
- the suspended gearbox mounting (see **19D**, **Engine mounting**, **Left-hand suspended engine mounting: Removal - Refitting**, page **19D-12**) ,
- the lower engine tie-bar (see **19D**, **Engine mounting**, **Lower engine tie-bar: Removal - Refitting**, page **19D-36**) ,
- the upper engine tie-bar (see **19D**, **Engine mounting**, **Right-hand suspended engine mounting: Removal - Refitting**, page **19D-20**) ,

F4R, and 770 or 771 or 776

- the front right-hand driveshaft (see **Front right-hand wheel driveshaft: Removal - Refitting**) (29A, Driveshafts),
- the front left-hand driveshaft (see **Front left-hand wheel driveshaft: Removal - Refitting**) (29A, Driveshafts).

❑ Proceed in the reverse order to removal.

❑ Torque tighten:

- the **front end panel upper bolts (21 N.m)**,
- the **front end panel lower bolts (44 N.m)**,
- the **half subframe front mounting bolt (105 N.m)**,
- the **half subframe rear mounting bolt (21 N.m)**.

❑ Add the brake fluid to the brake fluid reservoir.

IMPORTANT

Correctly attach the flexible brake pipe and ABS sensor wiring.

Do not twist the brake hoses.

F4R, and 770 or 776

❑ Bleed the clutch (see **Clutch circuit: Bleeding**) (37A, Mechanical component controls).

❑ Perform the following operations:

- fill up the gearbox oil (see **Manual gearbox oil: Draining - Refilling**) (21A, Manual gearbox),
- fill the engine oil (see **10A**, **Engine and cylinder block assembly**, **Engine oil: Draining - Refilling**, page **10A-43**) .

AIR CONDITIONING or CLIMATE CONTROL

❑ Fill the refrigerant circuit using a **refrigerant charging station** (see **Coolant circuit Draining - Refilling**) (62A, Air conditioning).

❑ Connect the battery (see **Battery : Removal - Refitting**) (80A, Battery).

❑ Fill and bleed the cooling system (see **19A**, **Cooling**, **Cooling circuit: Draining - Refilling**, page **19A-15**) .

Note:

It is essential to initialise the xenon bulb system (if fitted to the vehicle) (see **Xenon headlights: Adjustment**) (80C, Xenon bulbs).

❑ Adjust the headlight beams (see **Halogen headlight: Adjustment**) (80B, Headlights).

K9K, and 729, and DP0

Essential special tooling	
Car. 1363	Set of trim removal levers.
Mot. 1202-01	Pliers for large hose clips.
Mot. 1202-02	Pliers for small hose clips.
Mot. 1448	Long nose pliers for hose clips.

Essential equipment
refrigerant charging station
workshop hoist
load balancer

Tightening torques ▽	
front end panel upper bolts	**21 N.m**
front end panel lower bolts	**44 N.m**
half sub-frame front bolts	**105 N.m**
half sub-frame rear bolts	**210 N.m**

IMPORTANT

To avoid all risk of damage to the systems, apply the safety and cleanliness instructions and operation recommendations before carrying out any repair:

- (see **13B**, **Diesel injection**, **Diesel injection: Precautions for repair**, page **13B-12**) ,
- (see **Vehicle: Precautions for repair**) (01D, Mechanical introduction).

IMPORTANT

Wear leaktight gloves (Nitrile type) for this operation.

WARNING

To prevent impurities from entering the circuit, place protective plugs on all fuel circuit components exposed to the open air.

WARNING

To avoid any corrosion or damage, protect the areas on which fuel is likely to run.

WARNING

Keep the pipe unions away from contaminated areas.

WARNING

To prevent moisture from entering the system, place plugs on the cold loop components which are open to the air.

Note:

Procedure for removing the air inlet duct on the intercooler:

- detach the hose using the **(Car. 1363)**,
- do not use a degreaser, brake cleaning product, or any other product,
- clean the bearing face on the intercooler and on the hose with a dry, lint-free cloth,
- always replace the clip with a new one,
- refit the clip in the same position in the event that the hose is not replaced,
- it is essential to replace the hose and/or the intercooler if they are damaged.

❑

Note:

There is a risk of leaks or dislodging if this procedure is not followed.

K9K, and 729, and DP0

REMOVAL

❑ Position the vehicle on a two-post lift (see **Vehicle: Towing and lifting**) (02A, Lifting equipment).

❑ Remove:

- the engine covers,
- the front wheels (see **Wheel: Removal - Refitting**) (35A, Wheels and tyres),
- the front wheel arch liners (see **Front wheel arch liner: Removal - Refitting**) (55A, Exterior protection),
- the engine undertray bolts,
- the engine undertray.

❑ Drain:

- the gearbox (see **Manual gearbox oil: Draining - Refilling**) (21A, Manual gearbox),
- the engine (see **10A**, **Engine and cylinder block assembly**, **Engine oil: Draining - Refilling**, page **10A-43**) .

❑ Disconnect the battery (see **Battery: Removal - Refitting**) (80A, Battery).

AIR CONDITIONING or CLIMATE CONTROL

❑ Drain the refrigerant circuit using a **refrigerant charging station** (see **Coolant circuit Draining - Refilling**) (62A, Air conditioning).

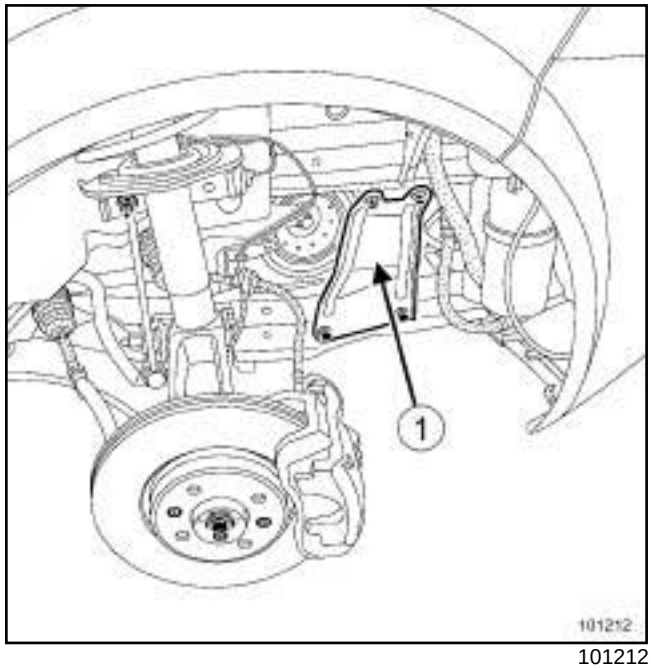

101212

❑ Remove:

- the battery (see **Battery: Removal - Refitting**) (80A, Battery)
- the side reinforcements (**1**) from the half-sub-frame,
- the front bumper (see **Front bumper: Removal - Refitting**) (55A, Exterior protection).

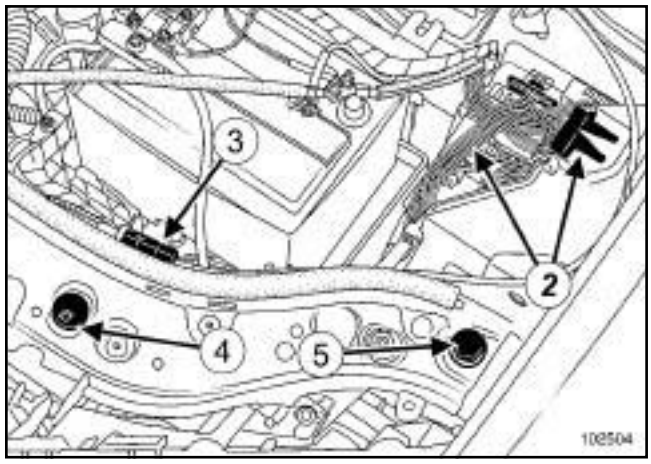

102504

❑ Disconnect the connectors (**2**) .

❑ Unfasten the bonnet opening cable (**3**) .

❑ Remove:

- the clip (**4**) ,
- the bolt (**5**) .

❑ Disconnect the screen washer pipes.

K9K, and 729, and DP0

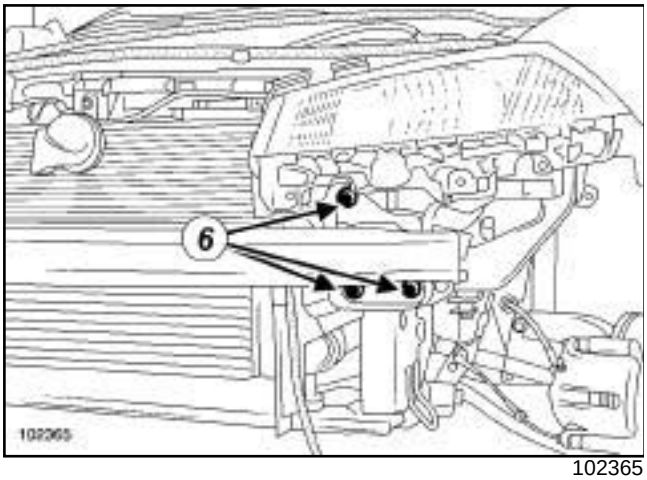

102365

❑ Remove:

- the front end panel bolts (**6**) ,
- the front of the vehicle.

❑ Drain the engine cooling system (see **19A**, **Cooling**, **Cooling circuit: Draining - Refilling**, page **19A-15**) .

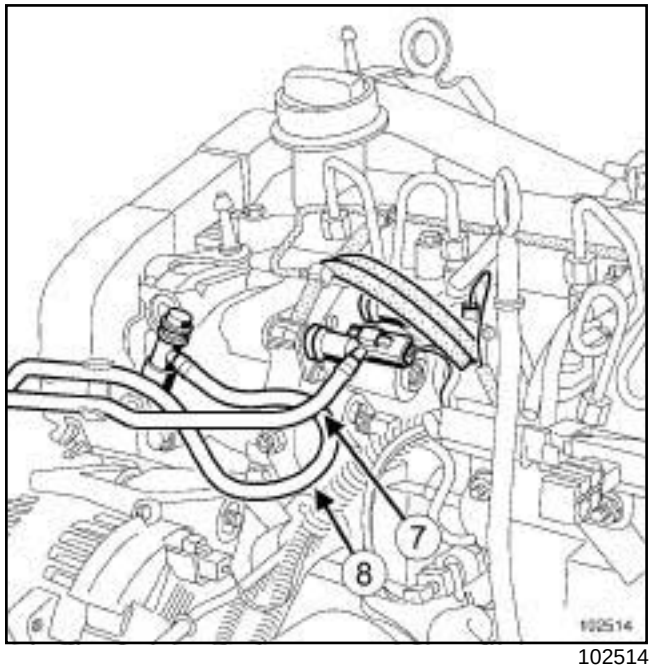

102514

❑ Remove:

- the fuel supply pipe (**7**) ,
- the fuel return pipe (**8**) .

❑ Plug the openings.

❑ Disconnect:

- the radiator top pipe using the tool **(Mot. 1202-01)** or **(Mot. 1202-02)** or **(Mot. 1448)**,
- the fan assembly connectors.

❑ Unclip the electrical wiring from the fan assembly.

K9K, and 729, and DP0

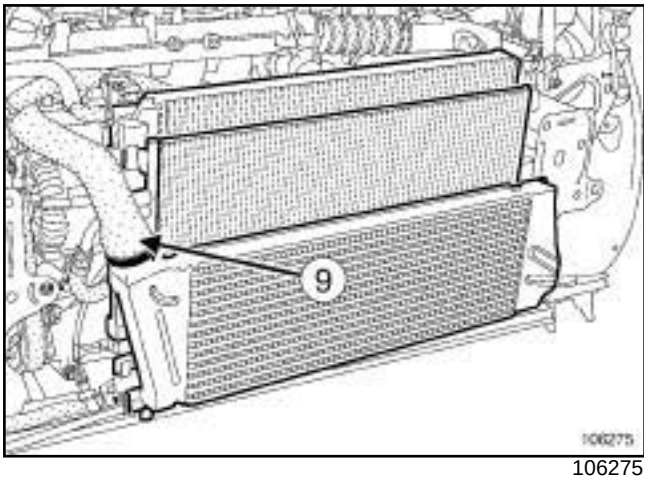

106275

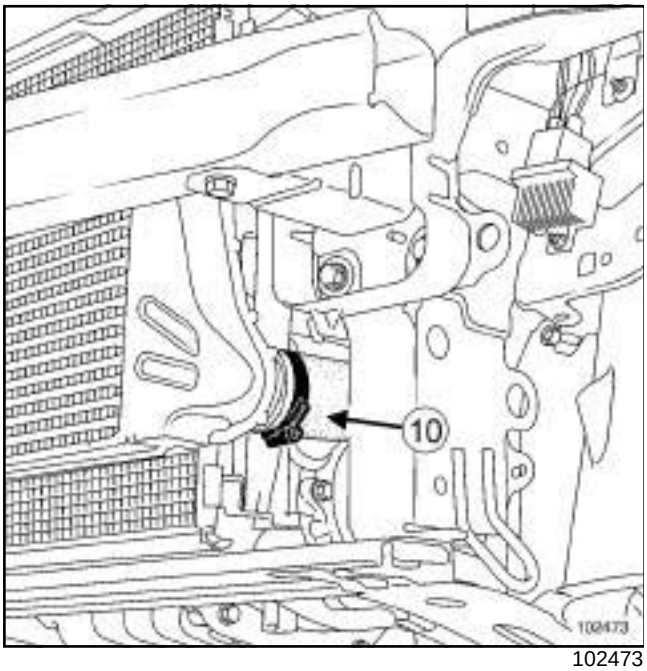

102473

❑ Disconnect the pipe from the intercooler (**9**) and (**10**) .

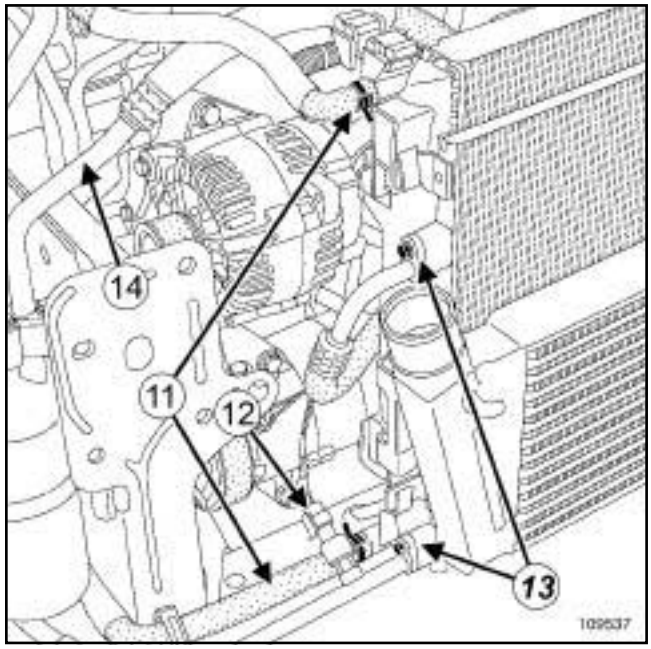

109537

❑ Disconnect the pipes from the expansion bottle on the cooling radiator side (**11**) .

AIR CONDITIONING or CLIMATE CONTROL

❑ Disconnect the pressostat connector from the lower air conditioning pipe on the condenser ***(12)*** .

❑ Remove:

- the air conditioning pipes from the condenser ***(13)*** ,
- the air conditioning pipe between the air conditioning compressor and the dehydrator reservoir ***(14)*** .

WARNING

To prevent moisture from entering the system, place plugs on the cold loop components which are open to the air.

❑ Remove all cooling radiators.

K9K, and 729, and DP0

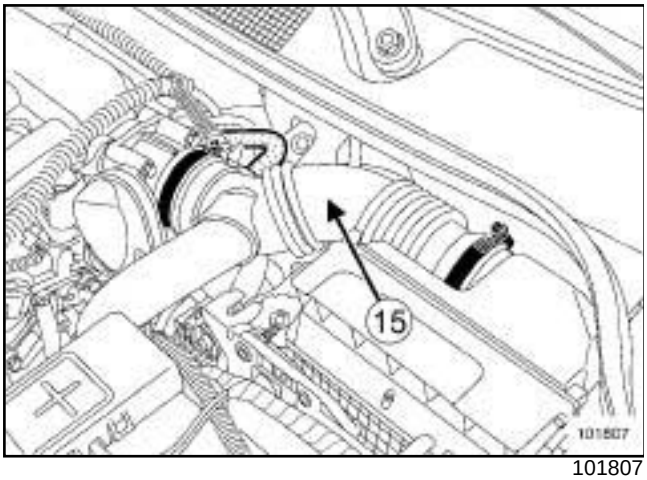

101807

❑ Remove the air filter outlet duct (**15**) .

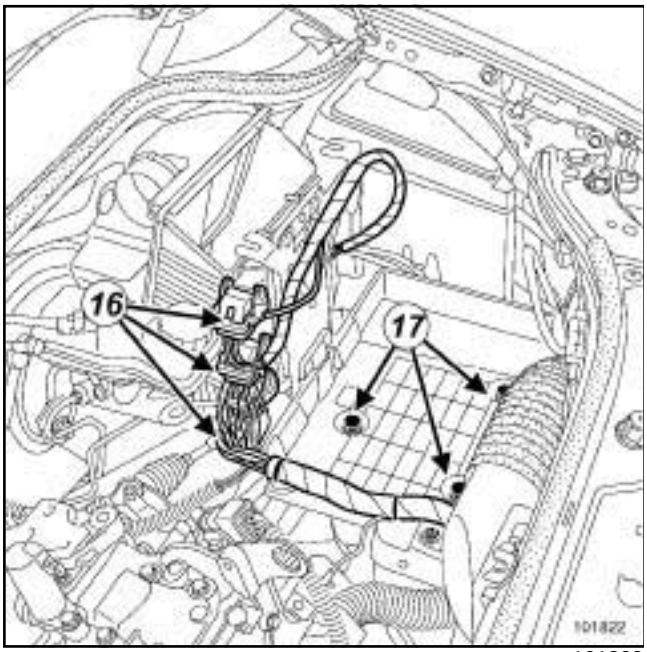

101822

❑ Disconnect the computer connectors (**16**) .

❑ Remove the bolts (**17**) from the battery tray.

❑ Move the turbocharger pressure solenoid valve to one side.

❑ Remove:

- the battery tray,
- the computer and its support.

❑ Disconnect the flowmeter connector (if fitted to the vehicle).

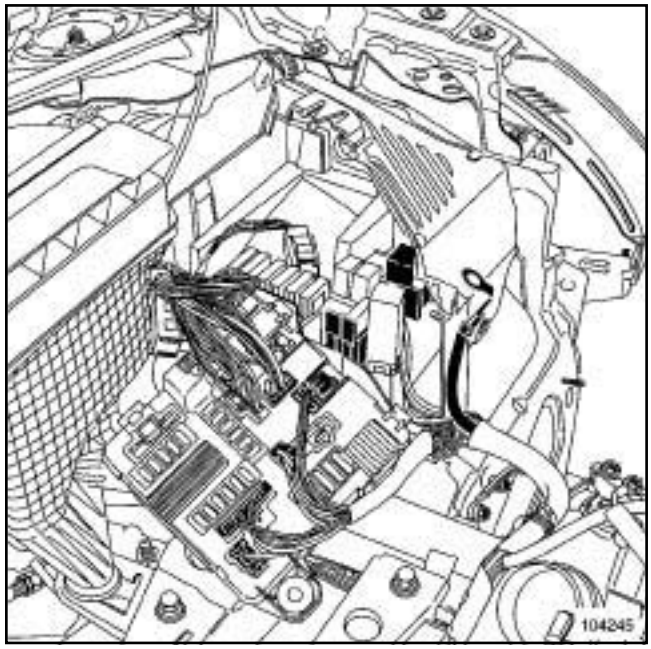

104245

❑ Disconnect:

- the connectors of the relay plate wiring,
- the relay,
- the fuse box,
- the earth cable on the body.

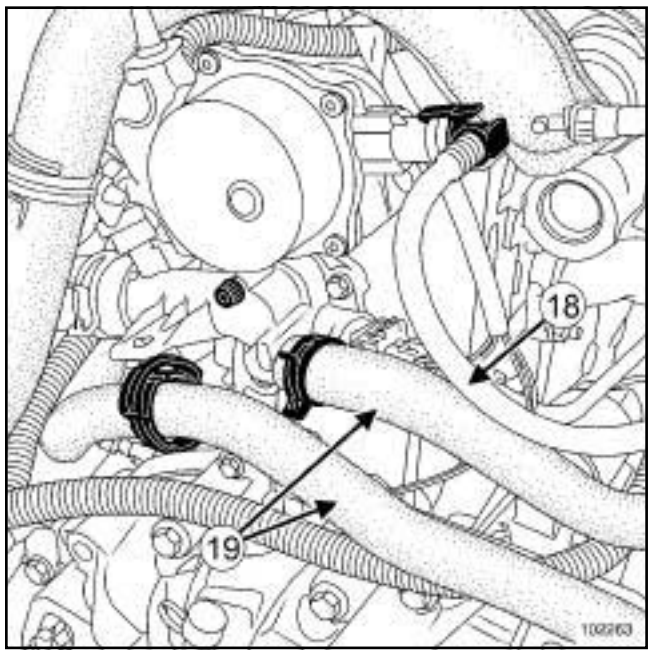

102263

❑ Remove the brake servo pipe from the vacuum pump (**18**) .

❑ Disconnect the pipe from the water chamber heater radiator (**19**) using the tool **(Mot. 1202-01)** or **(Mot. 1202-02)** or **(Mot. 1448)**.

K9K, and 729, and DP0

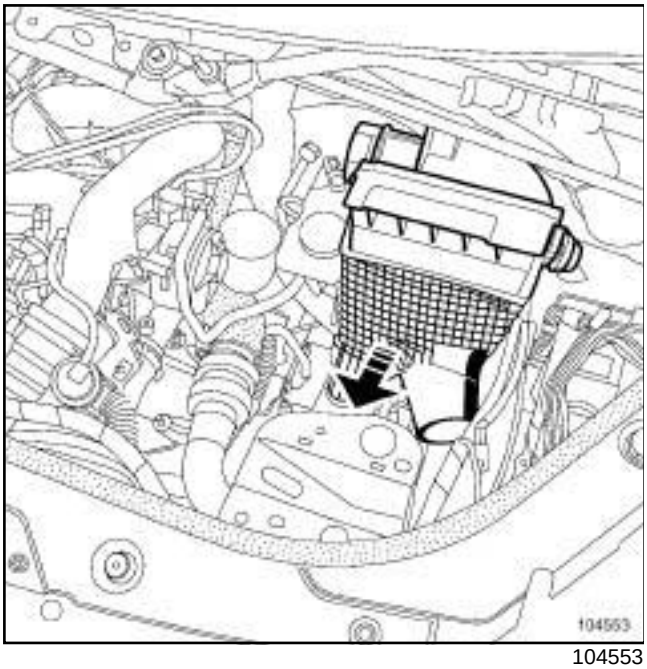

104553

❑ Remove the air filter unit.

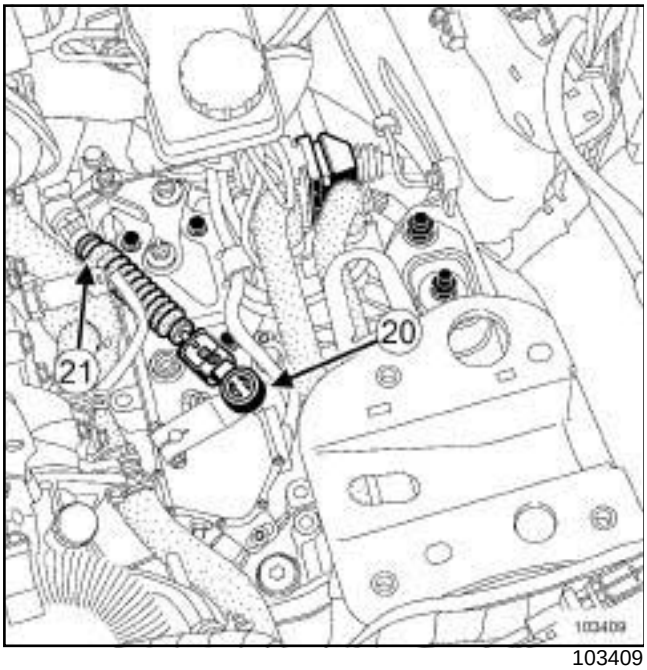

103409

❑ Remove:

- the ball joint of the multifunction switch cable (**20**) ,
- the multifunction switch cable (**21**) by unlocking the sleeve stop.

❑ Disconnect:

- the engine speed sensor,
- the connector by releasing the slide from the connector.

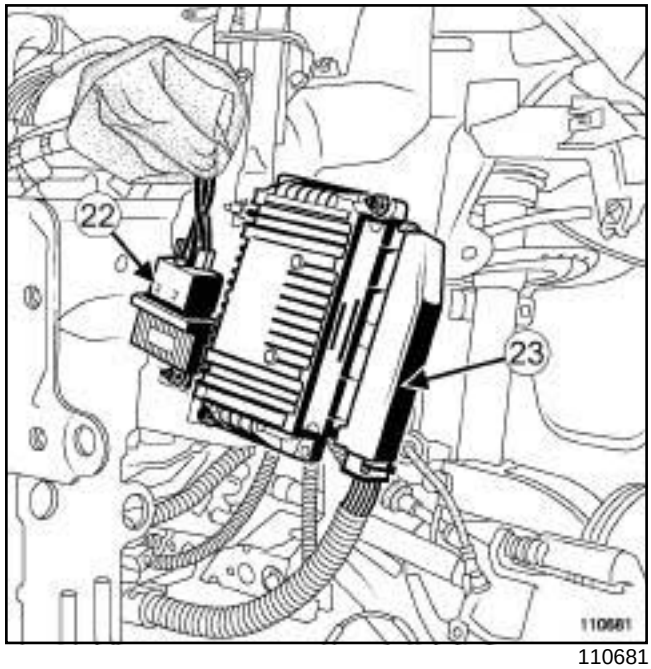

110681

❑ Disconnect:

- the pre-postheating unit (**22**) ,
- the automatic gearbox computer connector (**23**) .

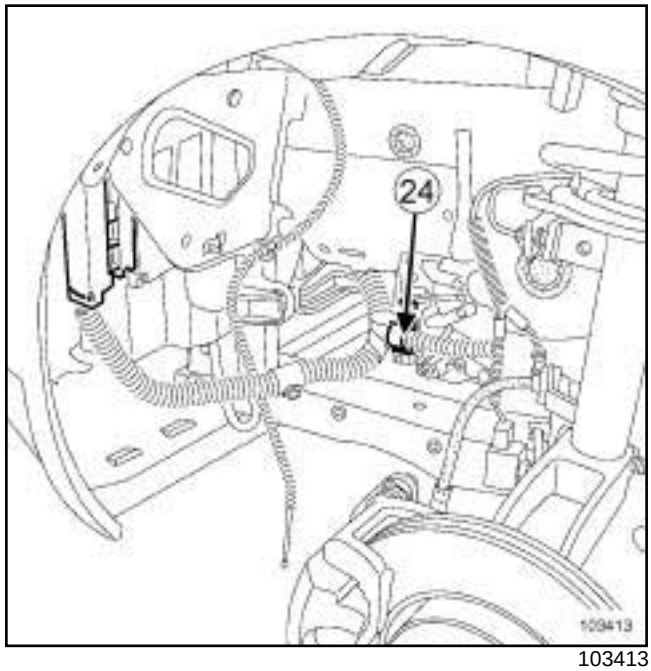

103413

❑ Open the bracket (**24**) of the wiring for the automatic gearbox computer.

K9K, and 729, and DP0

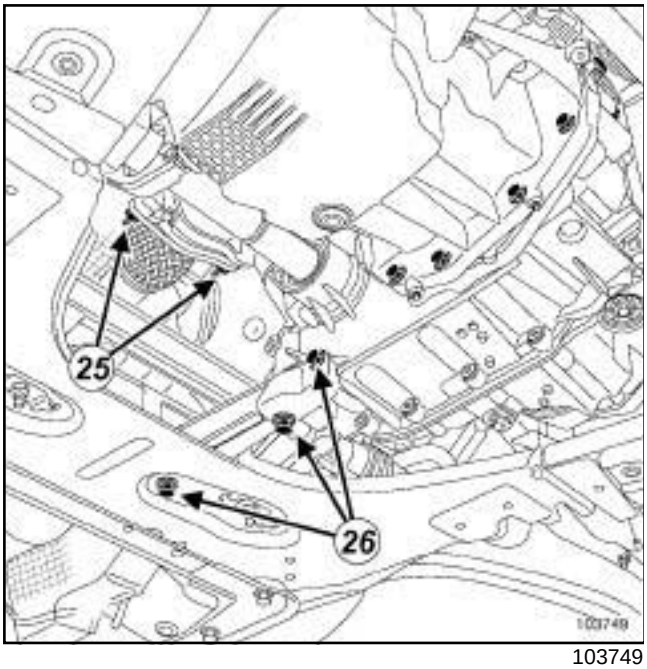

103749

❑ Remove:

- the exhaust flange nuts (**25**) ,
- the lower engine tie-bar (**26**) (see **19D**, **Engine mounting**, **Lower engine tie-bar: Removal - Refitting**, page **19D-36**) .

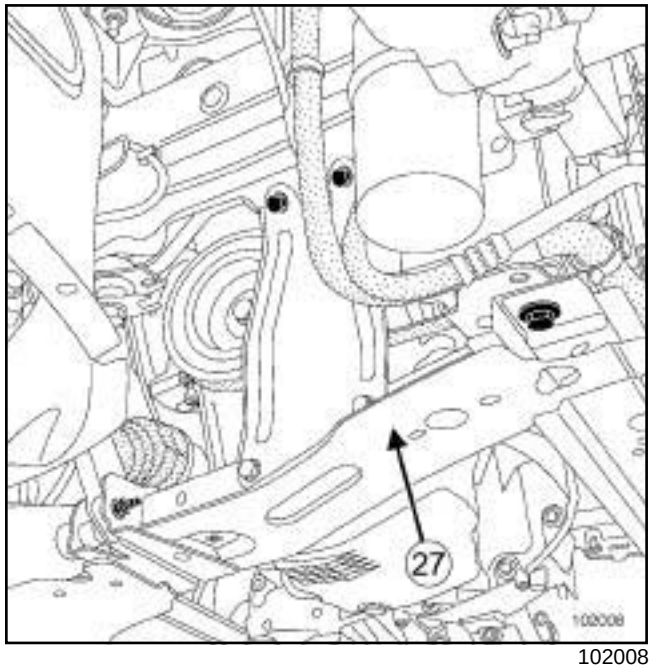

102008

❑ Remove:

- the front right-hand driveshaft (see **Front right-hand wheel driveshaft: Removal - Refitting**) (29A, Driveshafts),
- the front left-hand driveshaft (see **Front left-hand wheel driveshaft: Removal - Refitting**) (29A, Driveshafts),
- the half-subframe (**27**) .

❑ Position the **workshop hoist** fitted with a **load balancer**.

K9K, and 729, and DP0

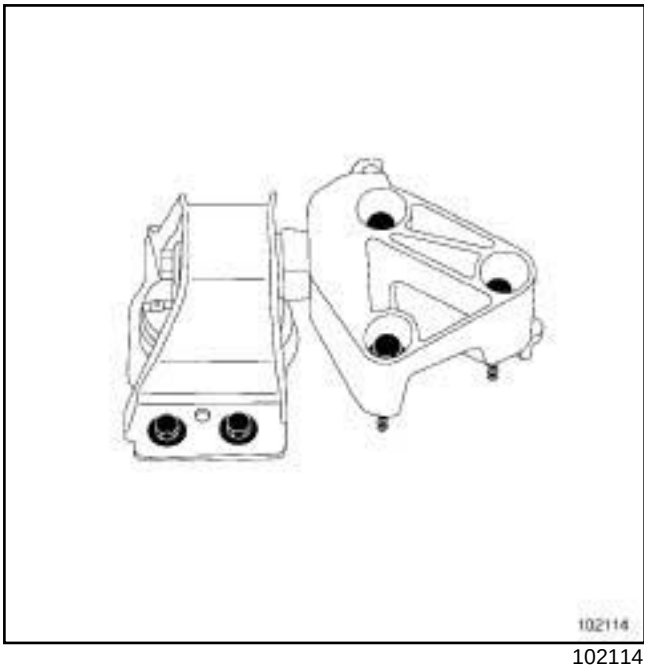

102114

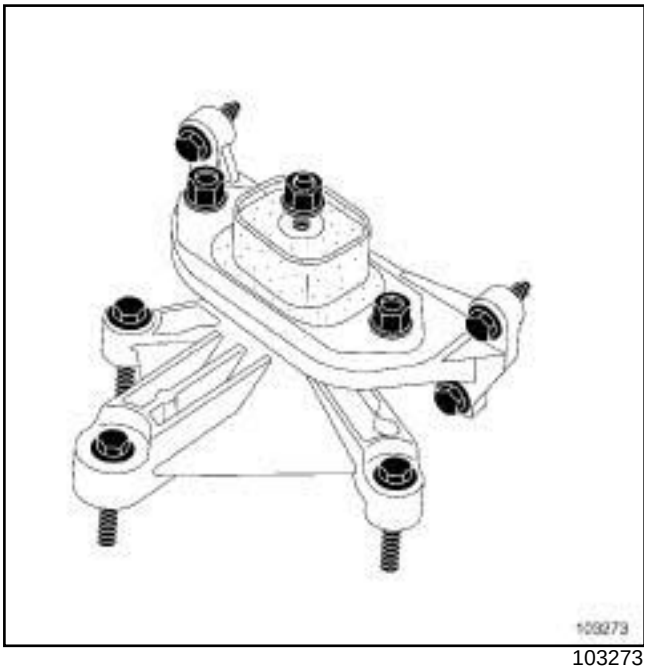

103273

❑ Mark the right-hand suspended engine mounting in relation to the body.

❑ Remove:

- the right-hand suspended engine mounting (see **19D**, **Engine mounting**, **Right-hand suspended engine mounting: Removal - Refitting**, page **19D-20**) ,
- the left-hand suspended engine mounting (see **19D**, **Engine mounting**, **Left-hand suspended engine mounting: Removal - Refitting**, page **19D-12**) .

❑ Turn the « engine - gearbox » assembly to remove it.

REFITTING

❑ If replacing the engine (see **Standard replacement**) (Technical Note 6006A, 10A, Engine and peripherals).

❑ Position the « engine-gearbox » assembly in the vehicle.

❑ Refit:

- the right-hand suspended engine mounting (see **19D**, **Engine mounting**, **Right-hand suspended engine mounting: Removal - Refitting**, page **19D-20**) ,
- the left-hand suspended engine mounting (see **19D**, **Engine mounting**, **Left-hand suspended engine mounting: Removal - Refitting**, page **19D-12**) ,
- the lower engine tie-bar (see **19D**, **Engine mounting**, **Lower engine tie-bar: Removal - Refitting**, page **19D-36**) ,
- the front right-hand driveshaft (see **Front right-hand wheel driveshaft: Removal - Refitting**) (29A, Driveshafts),
- the front left-hand driveshaft (see **Front left-hand wheel driveshaft: Removal - Refitting**) (29A, Driveshafts).

❑ Proceed in the reverse order to removal.

❑ Torque tighten:

- the **front end panel upper bolts (21 N.m)**,
- the **front end panel lower bolts (44 N.m)**,
- the **half sub-frame front bolts (105 N.m)**,
- the **half sub-frame rear bolts (210 N.m)**.

❑ Add the brake fluid to the brake fluid reservoir.

WARNING

In order not to damage the brake hose:

- do not tension the hose,
- do not twist the hose,
- check that there is no contact with the surrounding components.

❑ Refit the battery (see **Battery : Removal - Refitting**) (80A, Battery).

K9K, and 729, and DP0

❑ Perform the following operations:

- fill up the gearbox oil (see **Manual gearbox oil: Draining - Refilling**) (21A, Manual gearbox),
- top up the engine oil (see **10A**, **Engine and cylinder block assembly**, **Engine oil: Draining - Refilling**, page **10A-43**) ,
- fill and bleed the coolant circuit (see **19A**, **Cooling**, **Cooling circuit: Draining - Refilling**, page **19A-15**) .

AIR CONDITIONING or CLIMATE CONTROL

❑ Fill the refrigerant circuit using a **refrigerant charging station** (see **Coolant circuit Draining - Refilling**) (62A, Air conditioning).

Note:

It is essential to initialise the xenon bulb system (if fitted to the vehicle) (see **Xenon headlights: Adjustment**) (80C, Xenon bulbs).

❑ Adjust the headlight beams (see **Halogen headlight: Adjustment**) (80B, Headlights).

❑ Refit:

- the front wheel arch liners (see **Front wheel arch liner: Removal - Refitting**) (55A, Exterior protection),
- the front wheels (see **Wheel: Removal - Refitting**) (35A, Wheels and tyres),
- the engine undertray,
- the engine covers.

B84 or C84 or G84 or S84, and K4J, and 730 or 732 or 740 – B84 or C84 or G84 or S84, and K4M, and 764 or 768 or 788 or 856

Essential special tooling	
Mot. 1202-01	Pliers for large hose clips.
Mot. 1202-02	Pliers for small hose clips.
Mot. 1448	Long nose pliers for hose clips.

Essential equipment
refrigerant charging station
workshop hoist
load balancer

Tightening torques ▽	
front end panel upper bolt	**21 Nm**
front end panel lower bolt	**44 Nm**
half-subframe front bolt	**105 Nm**
half-subframe rear bolt	**21 Nm**
wheel bolt	**110 Nm**

REMOVAL

❑ Position the vehicle on a two-post lift (see **Vehicle: Towing and lifting**) (MR 364, 02A, Lifting equipment).

IMPORTANT
To prevent the vehicle from falling, lash it to the vehicle lift using a strap.

❑ Remove:

- the engine covers,
- the front wheels,
- the right-hand and left-hand wheel arch liners,
- the engine undertray.

❑ Drain:

- the gearbox (see **Manual gearbox oil: Draining - Refilling**) (MR 364, 21A, Oil change),
- the motor (see **10A**, **Engine and cylinder block assembly**, **Engine oil: Draining - Refilling**, page **10A-43**) .

❑ Disconnect the battery (see **Battery: Removal - Refitting**) (MR 364, 80A, Battery).

AIR CONDITIONING or CLIMATE CONTROL

❑ Drain the refrigerant circuit using the **refrigerant charging station** (see **Coolant circuit Draining - Refilling**) (MR 364, 62A, Parts and consumables for repair).

B84 or C84 or G84 or S84, and K4J, and 730 or 732 or 740 – B84 or C84 or G84 or S84, and K4M, and 764 or 768 or 788 or 856

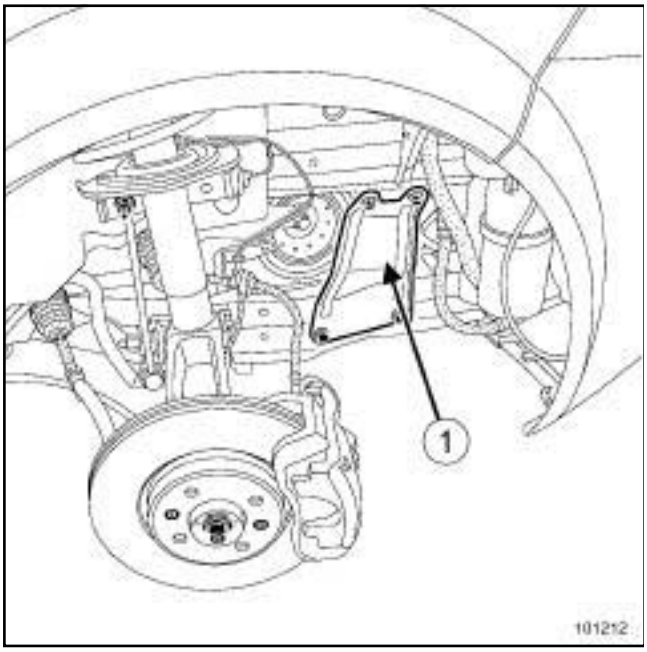

101212

❑ Remove:

- the battery (see **Battery: Removal - Refitting**) (MR 364, 80A, Battery),
- the side stiffeners (**1**) from the half-subframe,
- the front bumper (see **Front bumper: Removal - Refitting**) (MR 365, 55A, Exterior protection).

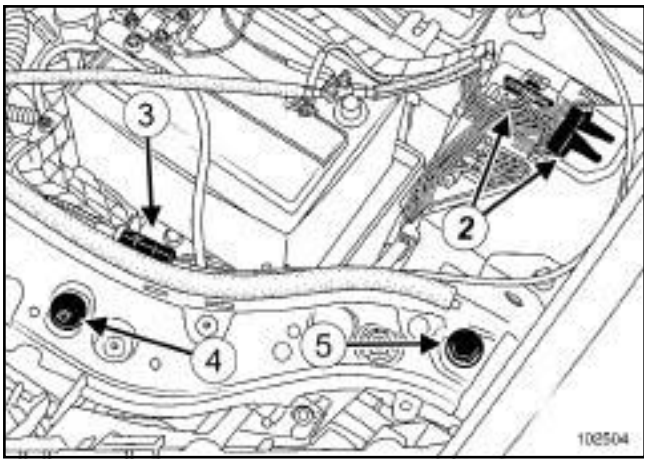

102504

❑ Disconnect the connectors (**2**) .

❑ Unclip the bonnet opening cable (**3**) .

❑ Remove:

- the clip (**4**) ,
- the mounting (**5**) .

❑ Disconnect the screen washer pipes.

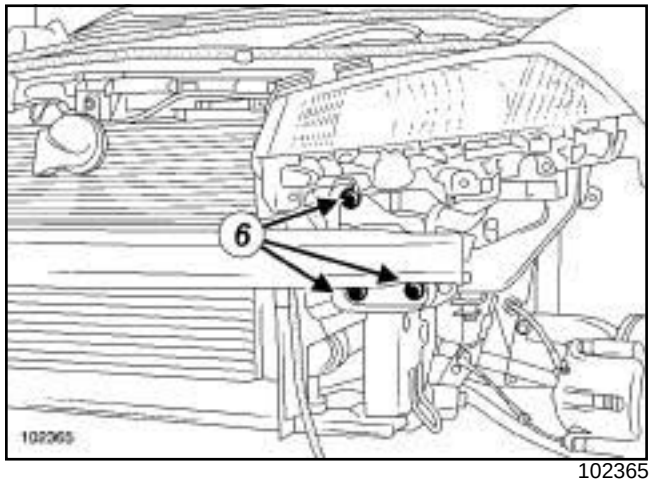

102365

❑ Remove:

- the front end panel bolts (**6**) ,
- the front end panel.

❑ Drain the engine cooling system (see **19A**, **Cooling**, **Cooling circuit: Draining - Refilling**, page **19A-15**) .

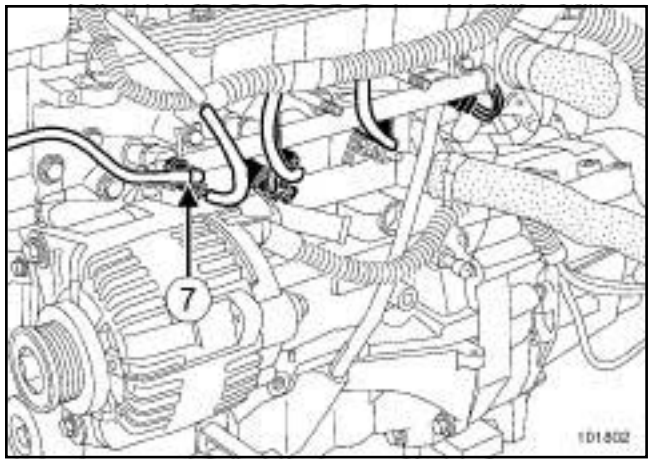

101802

❑ Disconnect the fuel supply union (**7**) .

❑ Disconnect:

- the cooling radiator top hose using the **(Mot. 1202-01)** or **(Mot. 1202-02)**, **(Mot. 1448)**,
- the fan assembly connectors.

❑ Unclip the wiring harness from the fan assembly.

B84 or C84 or G84 or S84, and K4J, and 730 or 732 or 740 – B84 or C84 or G84 or S84, and K4M, and 764 or 768 or 788 or 856

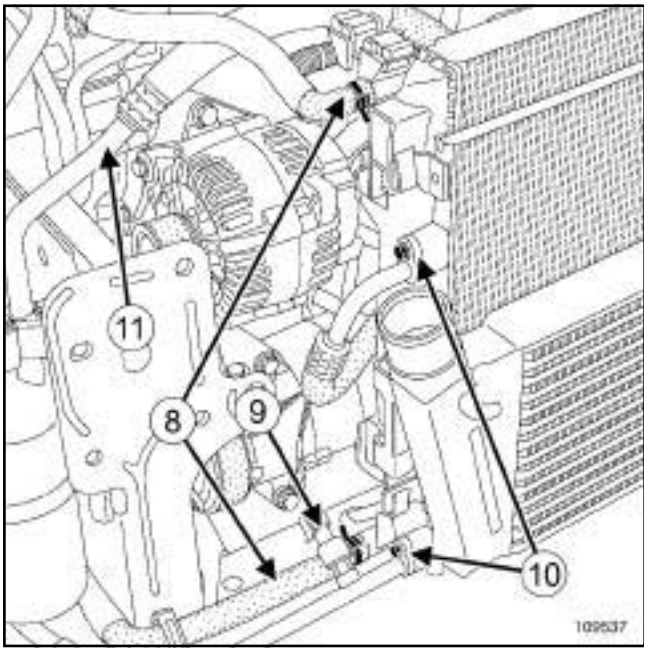

109537

❑ Disconnect the hoses from the cooling radiator expansion bottle (**8**) .

AIR CONDITIONING or CLIMATE CONTROL

❑ Disconnect the pressostat connector on the lower air conditioning pipe from the condenser ***(9)*** .

❑ Remove:

- the air conditioning pipes from the condenser ***(10)*** .
- the air conditioning pipe between the compressor and the dehydration canister ***(11)*** .

> Note:
>
> Plugs must be fitted to the hoses and the expansion valve to prevent moisture from entering the system.

❑ Remove the cooling assembly.

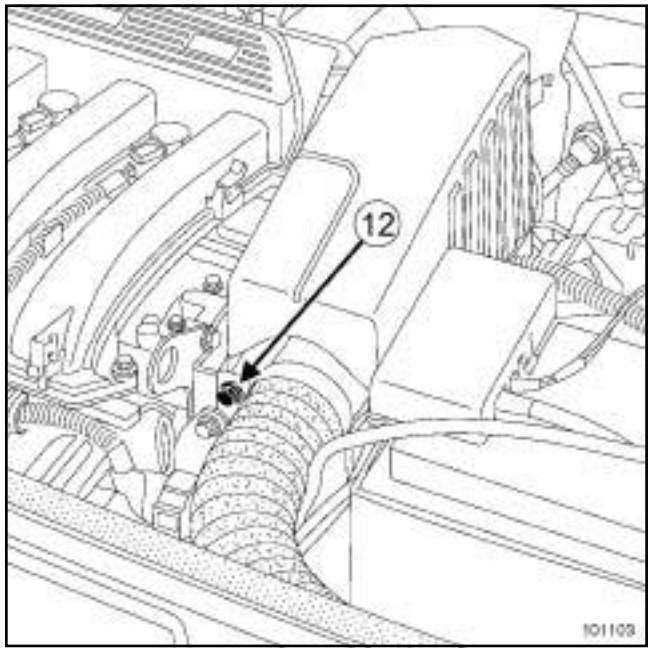

101103

❑ Remove:

- the bolt (**12**) from the air resonator,
- the air resonator.

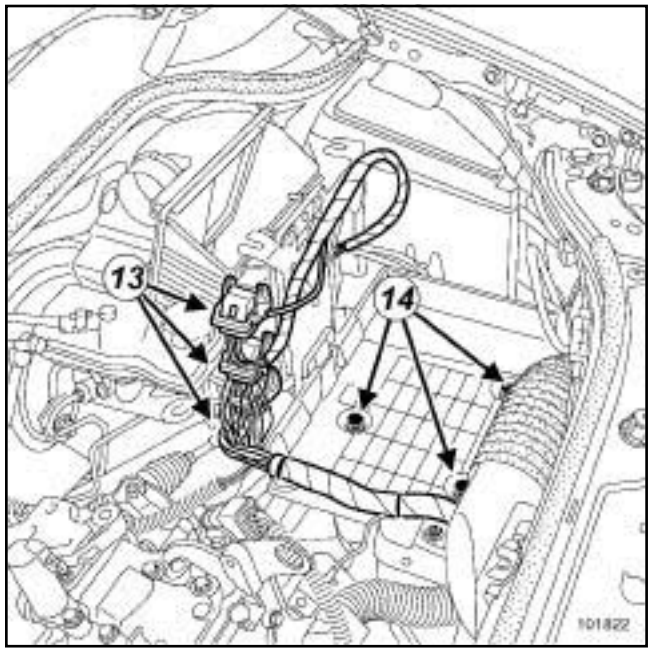

101822

❑ Disconnect the injection computer connectors (**13**) .

❑ Remove the bolts (**14**) from the battery tray.

❑ Remove:

- the battery tray,
- the computer mounting.

B84 or C84 or G84 or S84, and K4J, and 730 or 732 or 740 – B84 or C84 or G84 or S84, and K4M, and 764 or 768 or 788 or 856

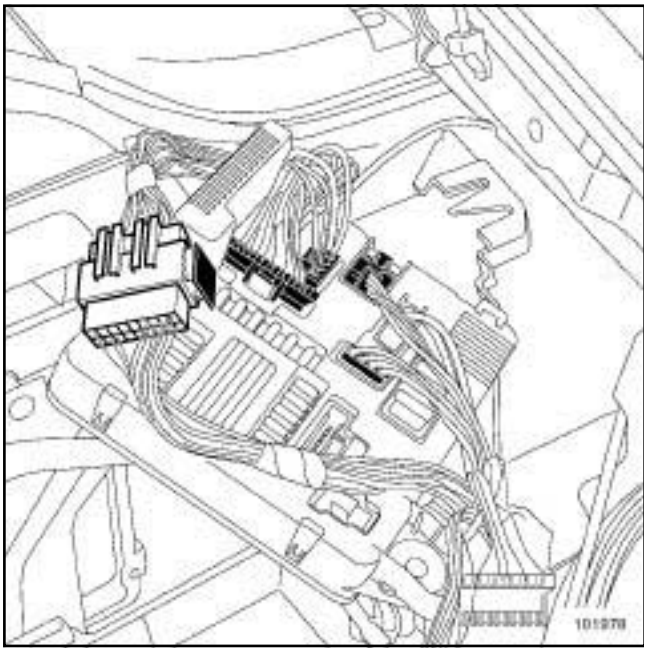

101978

❑ Disconnect the wiring harness connectors from the relay board.

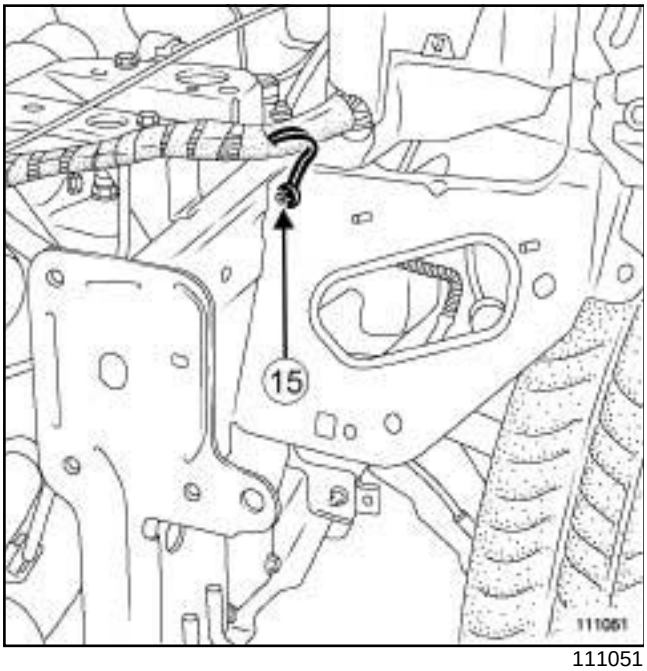

111051

❑ Disconnect the earth strap from the body.

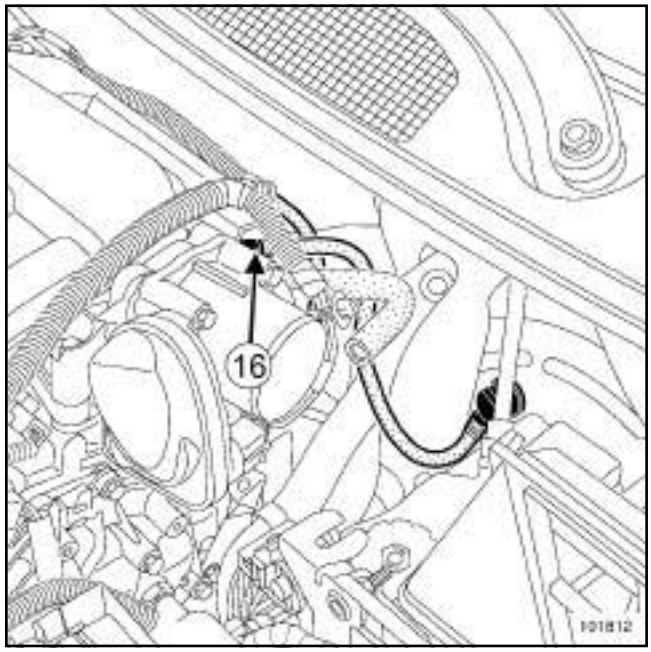

101812

❑ Remove the brake servo hose (**16**) .

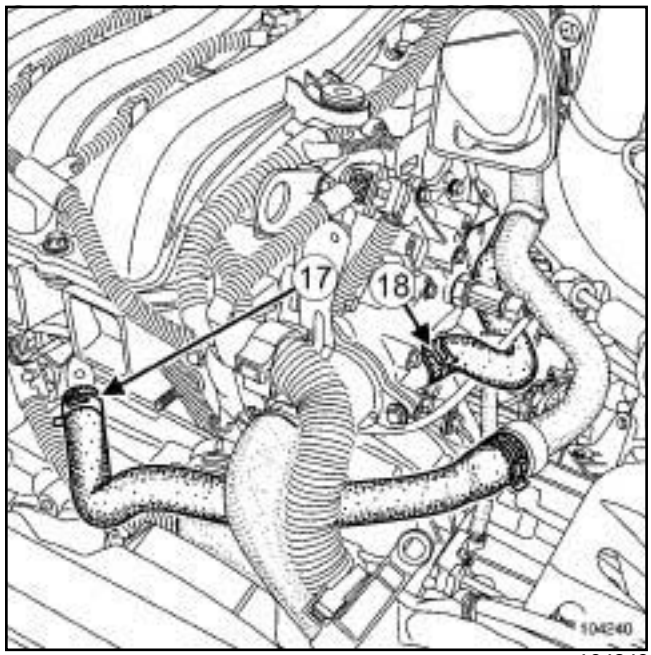

104240

❑ Disconnect:

- the hoses (**17**) and (**18**) using the **(Mot. 1202-01)** or **(Mot. 1202-02)**, **(Mot. 1448)**,
- the downstream oxygen sensor connector.

B84 or C84 or G84 or S84, and K4J, and 730 or 732 or 740 – B84 or C84 or G84 or S84, and K4M, and 764 or 768 or 788 or 856

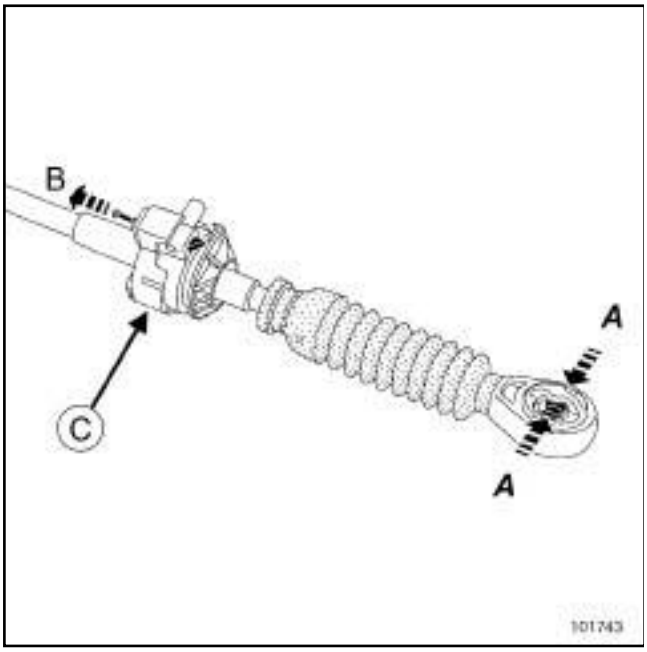

101743

❑ Unclip the lever cables on the gearbox by:

- squeezing the gearbox control at (**A**) ,
- pulling the pin at (**B**) ,
- lifting the gear control at (**C**) .

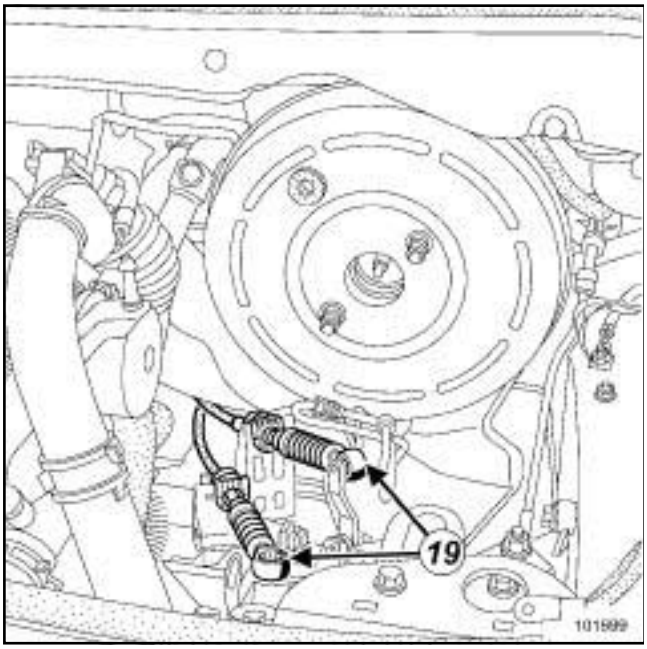

101699

❑ Remove the gearbox controls (**19**) .

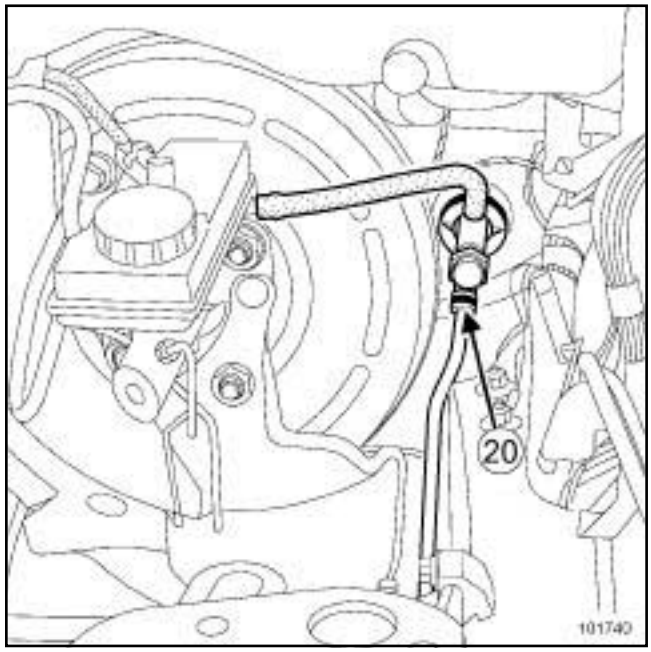

101740

❑ Pull out clip (**20**) .

WARNING

Prepare for the flow of fluid, and protect the surrounding components.

❑ Disconnect the hydraulic clutch supply pipe.

Note:

Plug the pipes to prevent fluid from escaping.

B84 or C84 or G84 or S84, and K4J, and 730 or 732 or 740 – B84 or C84 or G84 or S84, and K4M, and 764 or 768 or 788 or 856

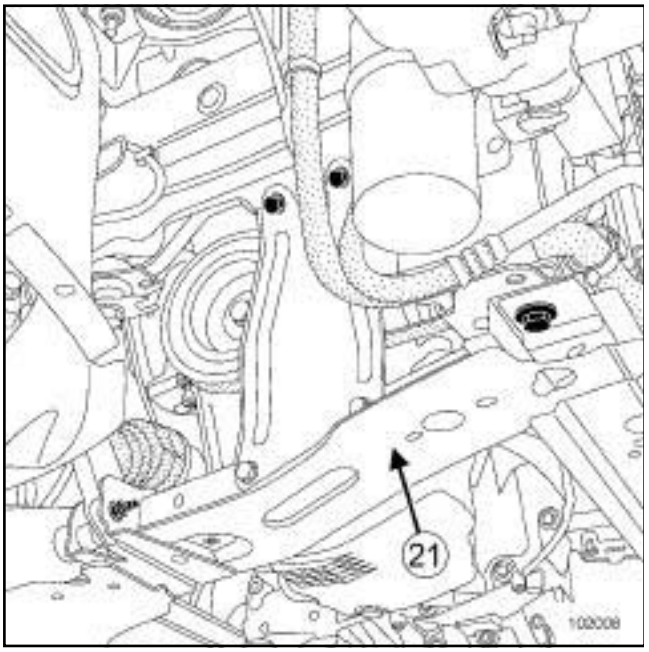

102008

❑ Remove:

- the front left-hand driveshaft (see **Front left-hand wheel driveshaft: Removal - Refitting**) (MR 364, 29A, Driveshafts),
- the front right-hand driveshaft (see **Front right-hand wheel driveshaft: Removal - Refitting**) (MR 364, 29A, Driveshafts),
- the exhaust downpipe mountings,
- the lower engine tie-bar,
- the half-subframe (**21**) .

❑ Position the **workshop hoist** fitted with a **load balancer** or a chain.

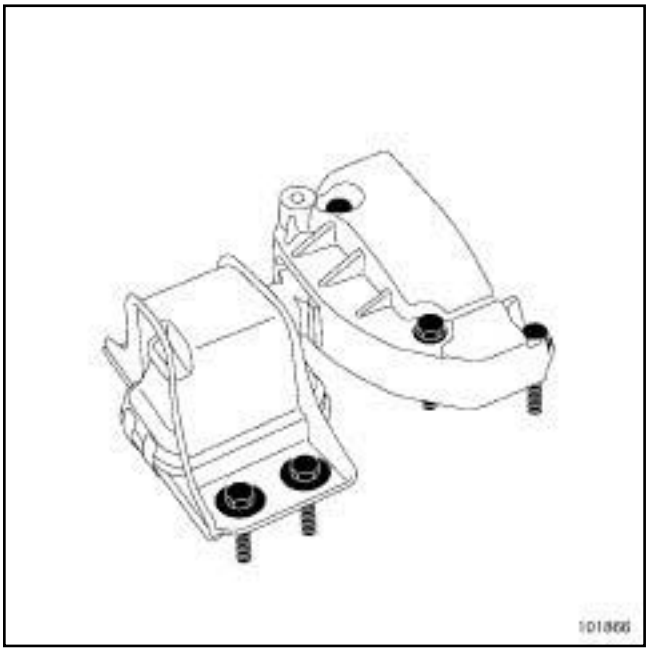

101866

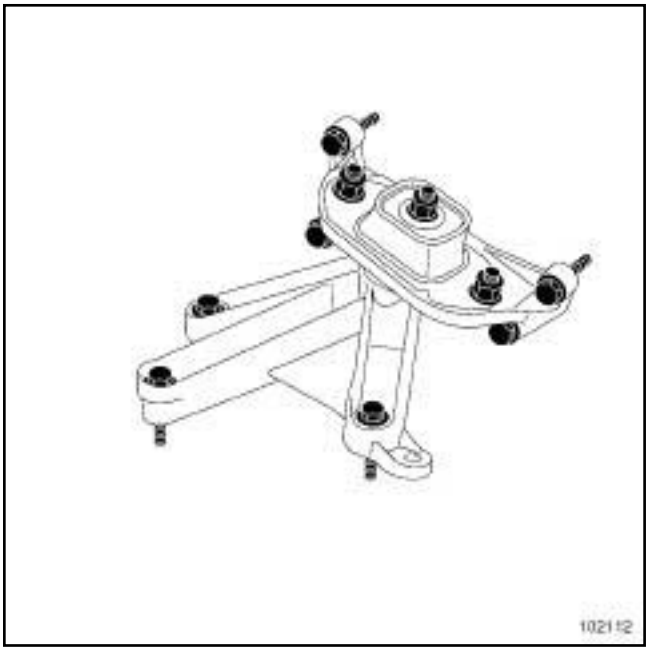

102112

❑ Mark the suspended engine mounting in relation to the body.

❑ Remove:

- the suspended engine mounting,
- the gearbox suspended engine mounting,

❑ Turn the « engine - gearbox » assembly to remove it.

❑ Remove the « engine - gearbox » assembly.

B84 or C84 or G84 or S84, and K4J, and 730 or 732 or 740 – B84 or C84 or G84 or S84, and K4M, and 764 or 768 or 788 or 856

REFITTING

- ❑ If replacing the engine (see **Standard replacement**) (Technical Note 3784A, 10A, Standard replacement).
- ❑ Position the « engine-gearbox » assembly in the vehicle.
- ❑ Refit:
  - the suspended engine mounting (see **19D**, **Engine mounting**, **Left-hand suspended engine mounting: Removal - Refitting**, page **19D-12**) ,
  - the suspended gearbox mounting (see **19D**, **Engine mounting**, **Right-hand suspended engine mounting: Removal - Refitting**, page **19D-20**) ,
  - the lower engine tie-bar (see **19D**, **Engine mounting**, **Lower engine tie-bar: Removal - Refitting**, page **19D-36**) ,
  - the front left-hand driveshaft (see **Front left-hand wheel driveshaft: Removal - Refitting**) (MR 364, 29A, Driveshafts),
  - the front right-hand driveshaft (see **Front right-hand wheel driveshaft: Removal - Refitting**) (MR 364, 29A, Driveshafts).
- ❑ Proceed in the reverse order to removal.
- ❑ Torque tighten:
  - the **front end panel upper bolt (21 Nm)**,
  - the **front end panel lower bolt (44 Nm)**,
  - the **half-subframe front bolt (105 Nm)**,
  - the **half-subframe rear bolt (21 Nm)**,
  - the **wheel bolt (110 Nm)**.
- ❑ Add the brake fluid to the brake fluid reservoir.
- ❑ Perform the following operations:
  - bleed the clutch system.
  - fill up the gearbox oil (see **Manual gearbox oil: Draining - Refilling**) (MR 364, 05A, Oil change),
  - top up the engine oil (see **10A**, **Engine and cylinder block assembly**, **Engine oil: Draining - Refilling**, page **10A-43**) ,
  - refill the cooling system (see **19A**, **Cooling**, **Cooling circuit: Draining - Refilling**, page **19A-15**) .

Note:

Correctly attach the brake pipe and the sensor wiring for the anti-lock braking system. Do not twist the brake hose.

- ❑ Connect the battery (see **Battery: Removal - Refitting**) (MR 364, 80A, Battery).
- ❑ Bleed the cooling system (see **19A**, **Cooling**, **Cooling circuit: Draining - Refilling**, page **19A-15**) .

AIR CONDITIONING or CLIMATE CONTROL

- ❑ Fill the refrigerant circuit using the **refrigerant charging station** (see **Coolant circuit Draining - Refilling**) (MR 364, 62A, Air conditioning).

- ❑ Adjust the headlights (see **Halogen headlight: Adjustment**) (MR 364, 80B, Headlights).

F9Q

Essential special tooling	
Car. 1363	Set of trim removal levers.
Mot. 1390	Support for removing/refitting the engine - gearbox assembly.

Essential equipment
refrigerant charging station

Tightening torques ▽	
half-subframe bolts	**105 N.m**
half-subframe nuts	**21 N.m**
side stiffener bolts	**21 N.m**
intercooler air inlet pipe clip	**5.5 N.m**
intercooler air outlet pipe clip	**5.5 N.m**
front end panel upper bolts	**21 N.m**
front end panel lower bolts	**44 N.m**
half-subframe side reinforcement bolts	**21 N.m**

IMPORTANT

To avoid all risk of damage to the systems, apply the safety and cleanliness instructions and operation recommendations before carrying out any repair:

- (see **13B**, **Diesel injection**, **Diesel injection: Precautions for repair**, page **13B-12**) ,
- (see **Vehicle: Precautions for repair**) (01D, Mechanical introduction).

IMPORTANT

Wear leaktight gloves (Nitrile type) for this operation.

WARNING

To prevent impurities from entering the circuit, place protective plugs on all fuel circuit components exposed to the open air.

WARNING

To avoid any corrosion or damage, protect the areas on which fuel is likely to run.

WARNING

Keep the pipe unions away from contaminated areas.

WARNING

To prevent moisture from entering the system, place plugs on the cold loop components which are open to the air.

REMOVAL

I - REMOVAL PREPARATION OPERATION

❑ Position the vehicle on a two-post lift (see **Vehicle: Towing and lifting**) (02A, Lifting equipment).

❑ Remove:

- the engine covers,
- the battery (see **Battery: Removal - Refitting**) (80A, Battery),
- the battery tray (see **Battery tray: Removal - Refitting**) (80A, Battery),
- the air filter unit (see **12A**, **Fuel mixture**, **Air filter unit: Removal - Refitting**, page **12A-11**) ,
- the front wheels (see **Wheel: Removal - Refitting**) (35A, Wheels and tyres),
- the front section of the front wheel arch liners (see **Front wheel arch liner: Removal - Refitting**) (55A, Exterior protection),
- the engine undertray bolts,
- the engine undertray,
- the front bumper (see **Front bumper: Removal - Refitting**) (55A, Exterior protection),

F9Q

- Drain the engine (see **10A**, **Engine and cylinder block assembly**, **Engine oil: Draining - Refilling**, page **10A-43**) .

F9Q, and 804 or 816 or 818

- Drain the manual gearbox oil (see **Manual gearbox oil: Draining - Refilling**) (21A, Manual gearbox).

AIR CONDITIONING or CLIMATE CONTROL

- Drain the refrigerant circuit using a **refrigerant charging station** (see **Coolant circuit Draining - Refilling**) (62A, Air conditioning).

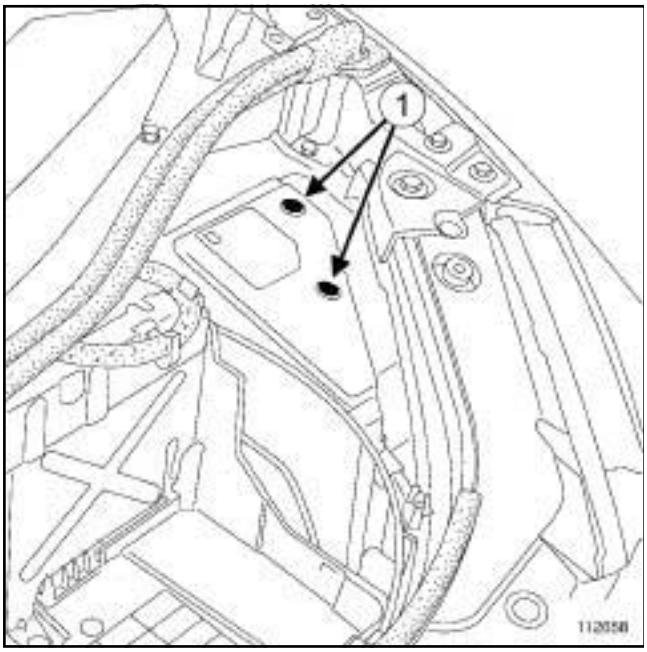

112658

- Remove:
  - the engine accessories unit cover bolts (**1**) ,
  - the engine accessories unit cover.

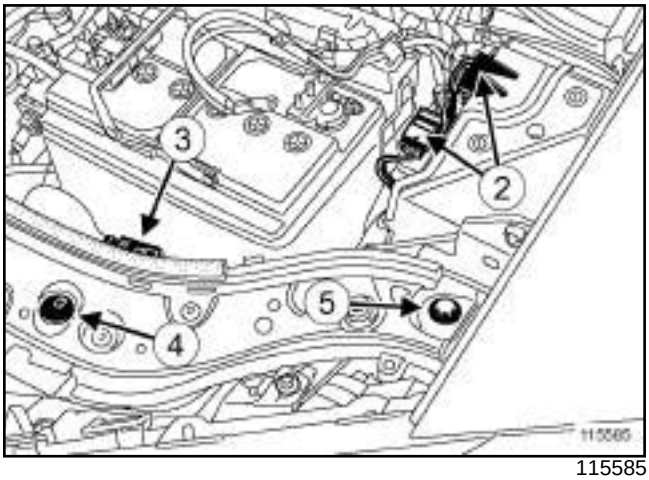

115585

- Disconnect the connectors (**2**) from the engine accessories unit.
- Unfasten the bonnet opening cable (**3**) .
- Remove:
  - the clips (**4**) ,
  - the front end panel upper bolts (**5**) .
- Disconnect the screen washer pipes.

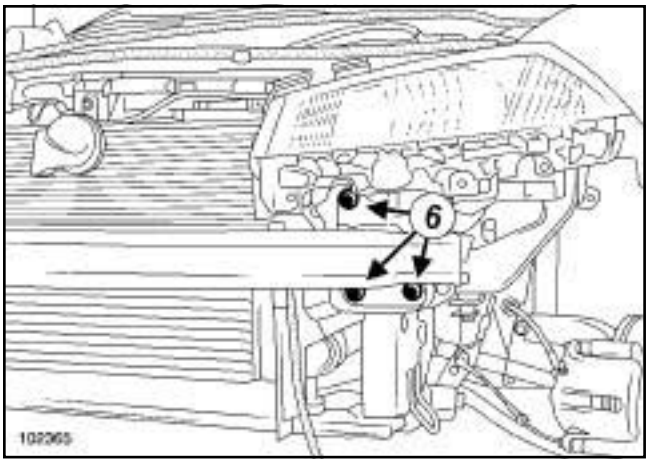

102365

- Remove:
  - the front end panel lower bolts (**6**) ,
  - the front of the vehicle.
- Drain the engine cooling system (see **19A**, **Cooling**, **Cooling circuit: Draining - Refilling**, page **19A-15**) .

F9Q

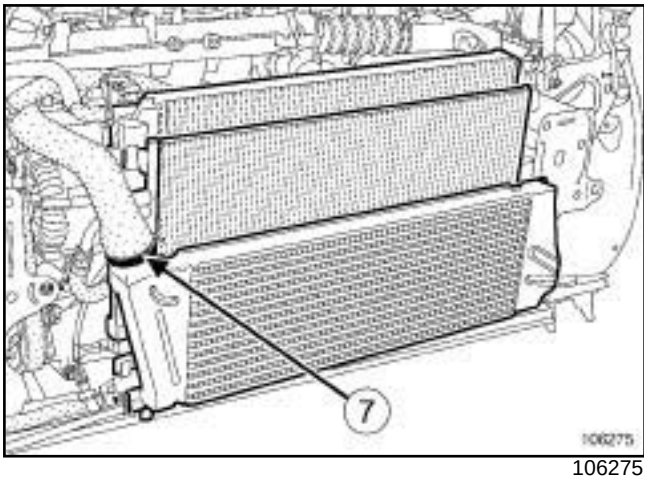

106275

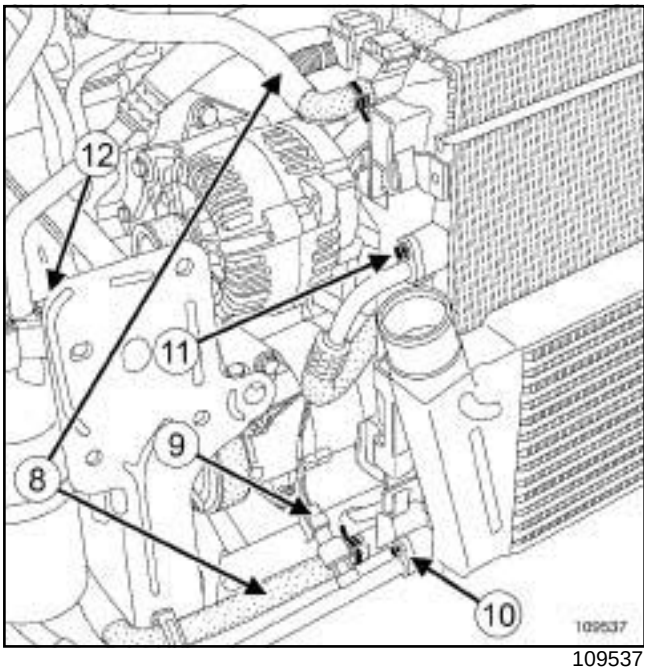

109537

❑ Loosen the clip on the intercooler air outlet pipe.

❑ Disconnect the intercooler air outlet pipe (**7**) .

F9Q, and 804 or 816 or 818

❑ Separate the clip on the expansion bottle pipes on the cooling radiator side using the tool **(Car. 1363)**.

❑ Disconnect the pipes from the expansion bottle on the cooling radiator side ***(8)*** .

F9Q, and 803

❑ Remove:

- the clip of the expansion bottle top pipe on the cooling radiator side using the tool **(Car. 1363)**,
- the clip of the expansion bottle bottom pipe on the expansion bottle side using the tool **(Car. 1363)**.

❑ Disconnect:

- the expansion bottle top pipe on the cooling radiator side,
- the expansion bottle bottom pipe on the expansion bottle side.

AIR CONDITIONING or CLIMATE CONTROL

❑ Disconnect the connector ***(9)*** from the pressure sensor on the condenser - evaporator connecting pipe on the condenser side.

❑ Unclip the pressure sensor electrical wiring on the fan assembly.

❑ Remove:

- the bolt ***(10)*** from the evaporator-condenser connecting pipe, on the condenser side,
- the bolt ***(11)*** from the condenser-compressor connecting pipe, on the condenser side,
- the bolt ***(12)*** from the compressor-dehydrator reservoir connecting pipe, on the dehydrator reservoir side.

❑ Disconnect:

- the evaporator-condenser connecting pipe on the condenser side,
- the condenser-compressor connecting pipe on the condenser side,
- the compressor-dehydrator reservoir connecting pipe on the dehydrator reservoir side.

WARNING

To prevent moisture from entering the system, place plugs on the cold loop components which are open to the air.

F9Q

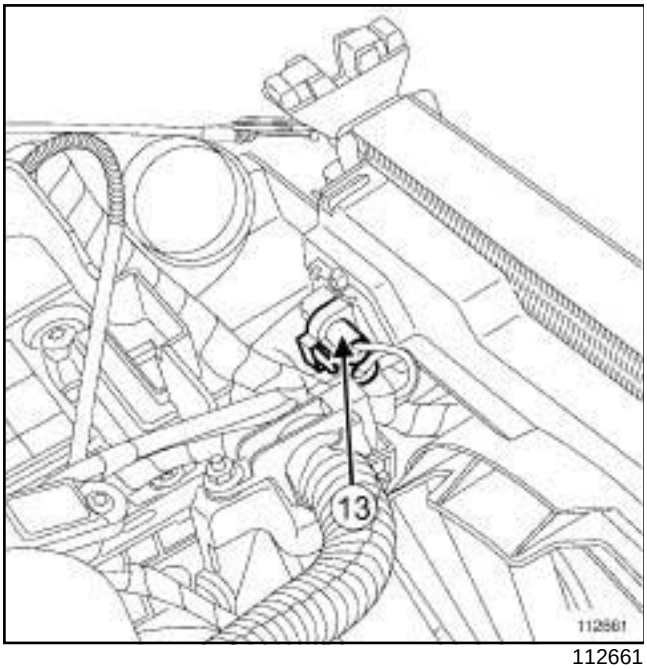

112661

❏ Disconnect:

- the fan assembly resistor connector (**13**) ,
- the fan assembly connector.

❏ Unclip the electrical wiring on the fan assembly.

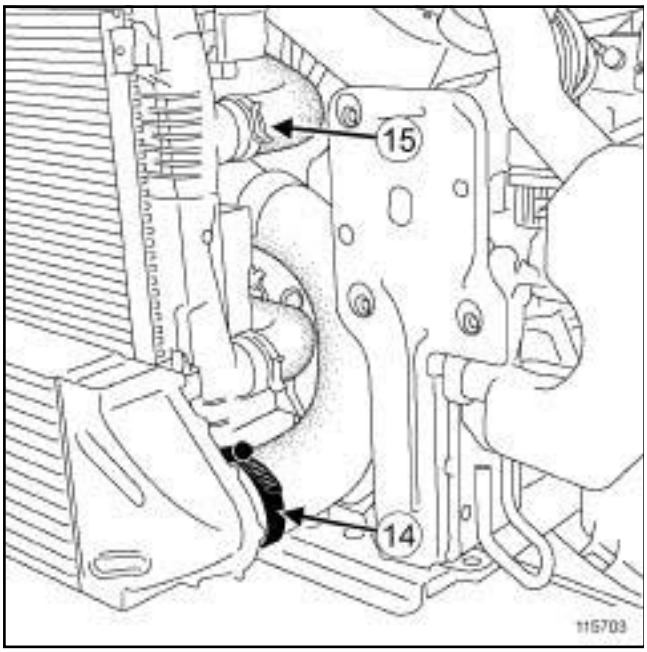

115703

❏ Detach the intercooler air inlet pipe using the tool **(Car. 1363)**.

❏ Loosen the clip (**14**) on the intercooler air inlet pipe.

❏ Separate the clip (**15**) on the top pipe of the cooling radiator using the tool **(Car. 1363)**.

❏ Disconnect the top cooling pipe.

❏ Remove the cooling assembly.

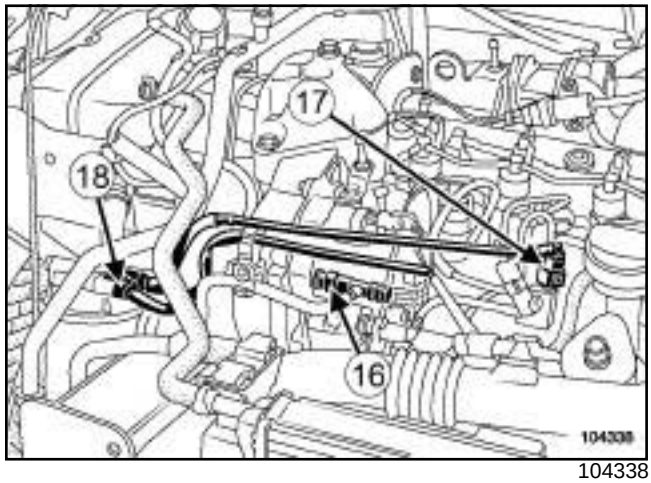

104338

❏ Disconnect:

- the fuel supply pipe (**16**) ,
- the fuel return pipe (**17**) ,
- the water detection sensor connector (**18**) .

WARNING

To prevent impurities from entering the circuit, place protective plugs on all fuel circuit components exposed to the open air.

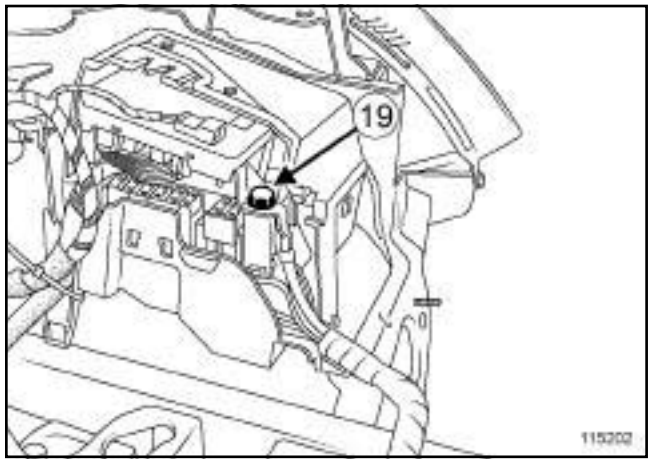

115202

❏ Remove the engine accessories unit bolt (**19**) .

F9Q

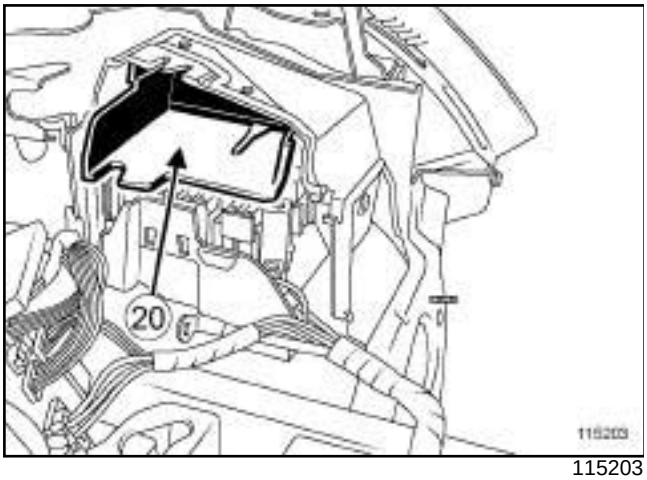

115203

❑ Remove the engine accessories unit support (**20**) .

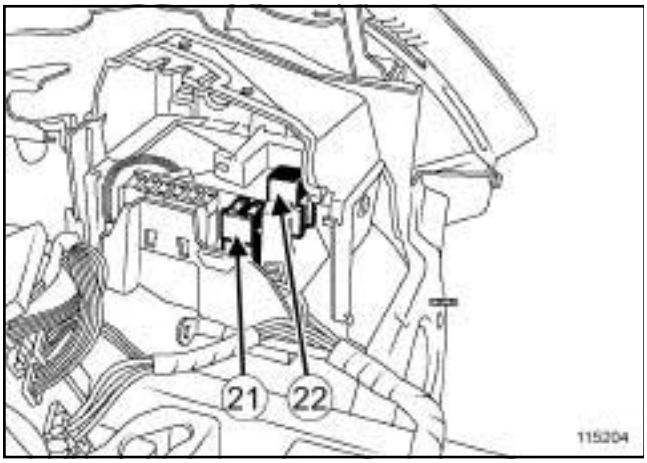

115204

❑ Remove:

- the fuse holder (**21**) ,
- the relay box (**22**) .

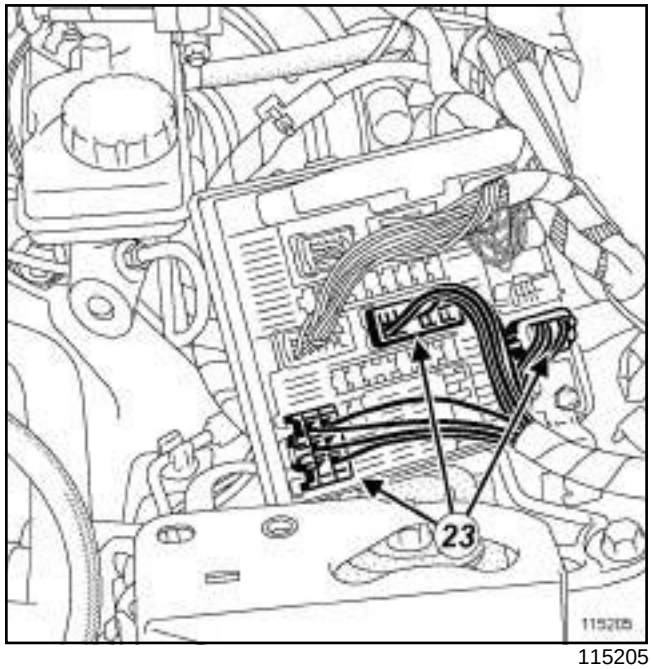

115205

❑ Disconnect the connectors (**23**) from the engine accessories unit.

F9Q, and 804 or 816 or 818

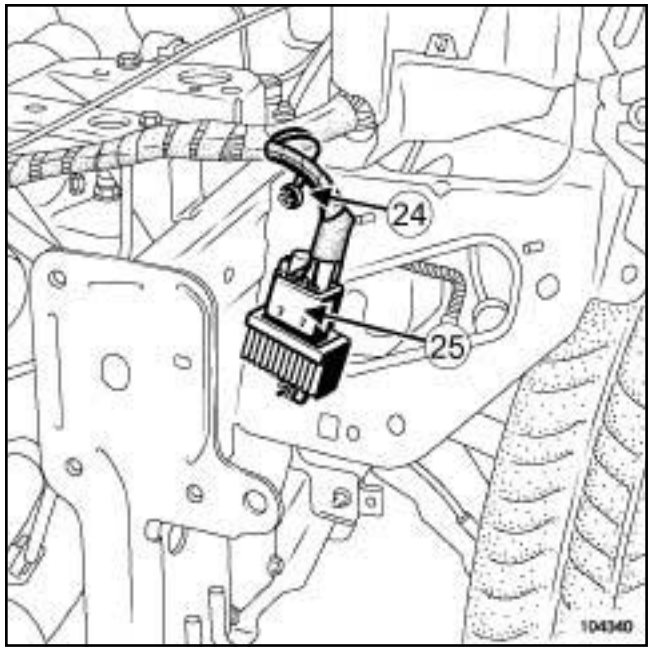

104340

❑ Remove the earth terminal nut (**24**) .

❑ Move the earth terminal to one side.

❑ Disconnect the pre-postheating unit connector (**25**) .

F9Q

F9Q, and 803

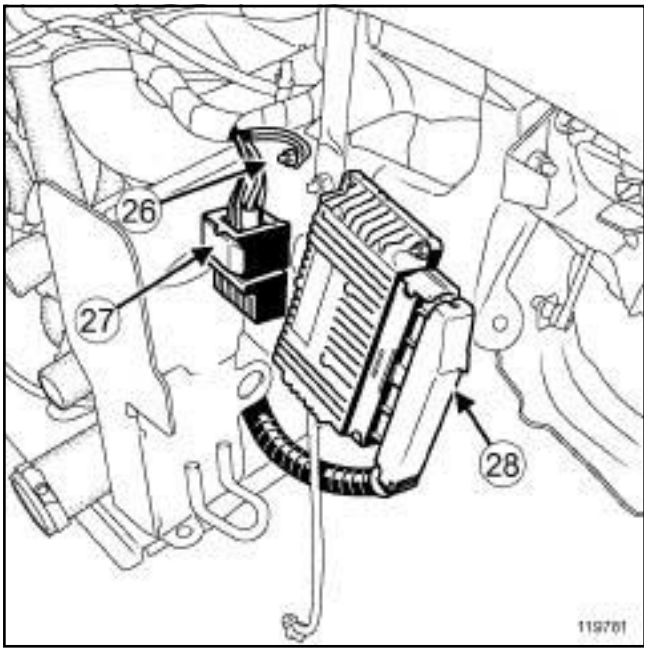

119781

- Remove the earth terminal nut (**26**) .
- Move the earth terminal to one side.
- Disconnect:
  - the pre-postheating unit connector (**27**) ,
  - the automatic transmission computer connector (**28**) .

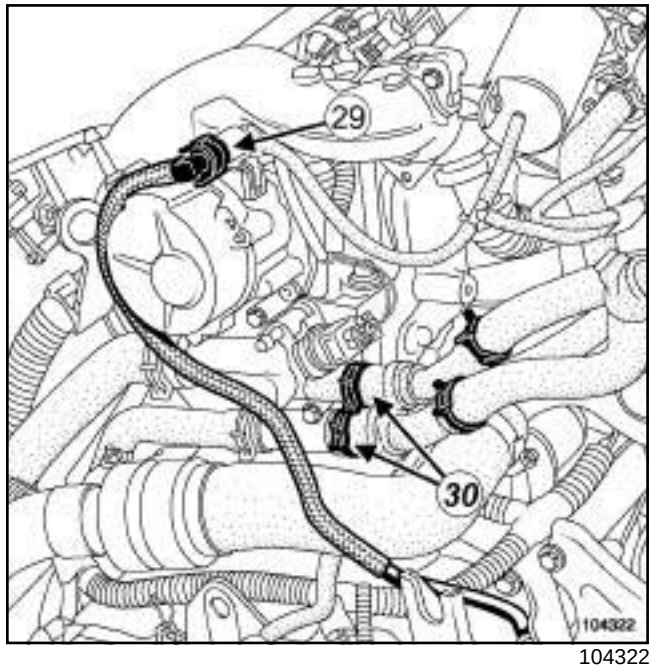

104322

- Remove the brake servo pipe (**29**) from the vacuum pump.
- Disconnect the pipes from the heater radiator (**30**) on the water chamber side using the tool **(Car. 1363)**.

F9Q

F9Q, and 804 or 816 or 818

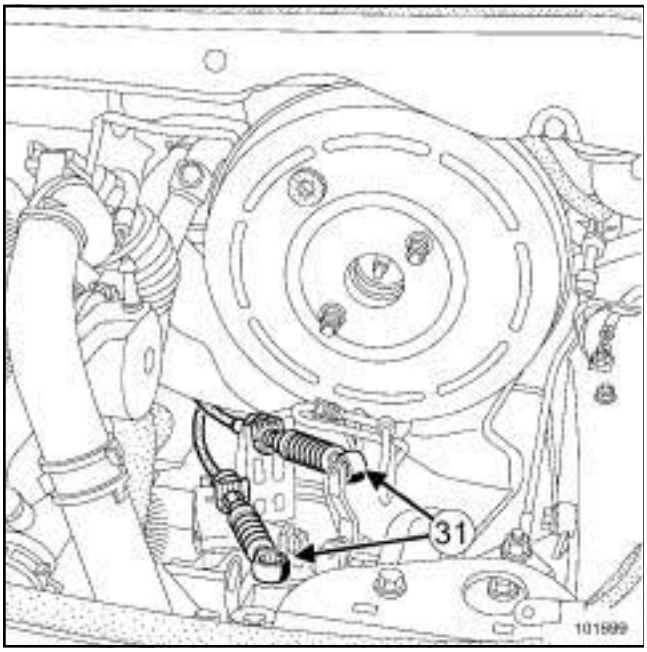

101699

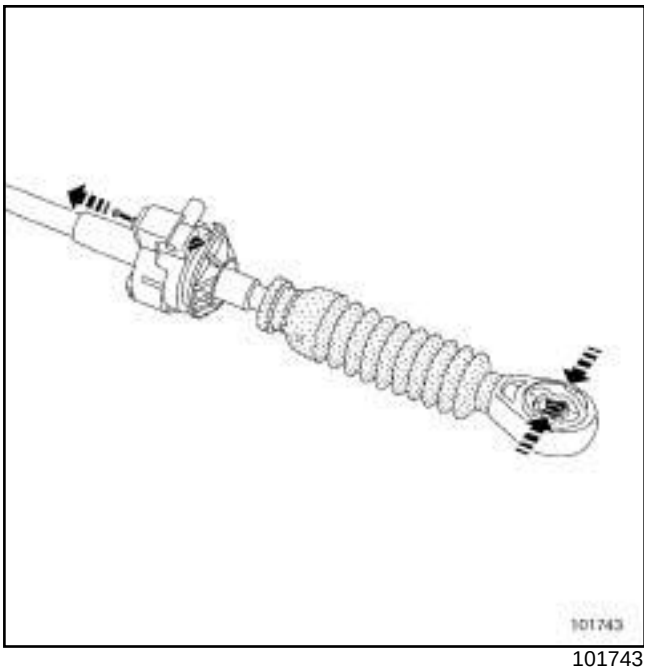

101743

❑ Unclip the two control cables (**31**) on the gearbox:

- grip the gearbox control,
- pull the pin,
- raise the gearbox control.

F9Q, and 803

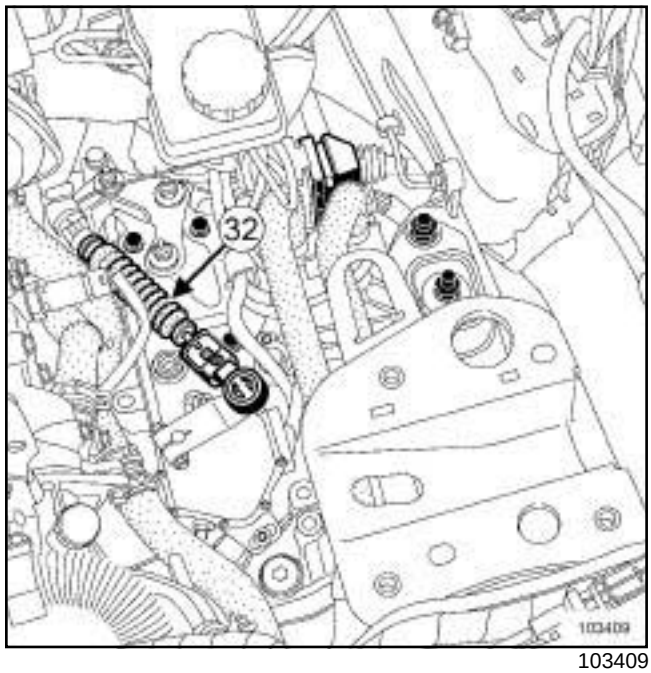

103409

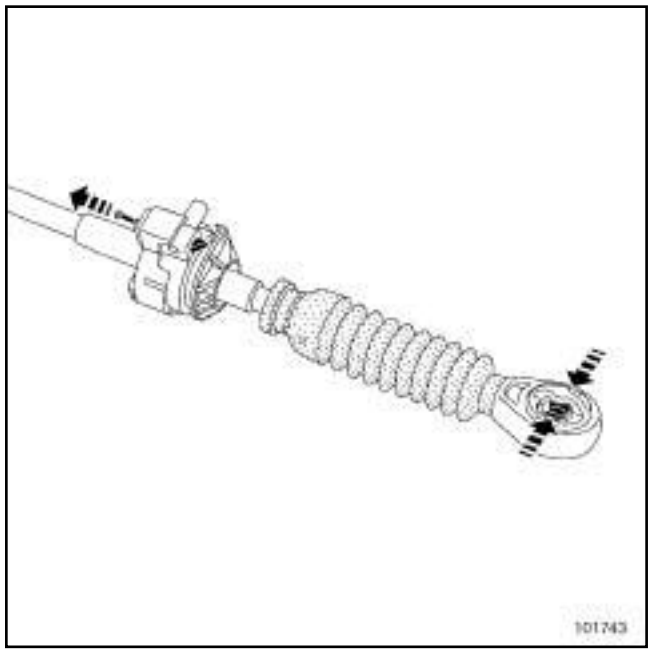

101743

❑ Unclip the multifunction switch control cable (**32**) on the gearbox:

- grip the multifunction switch control,
- pull the pin,
- raise the multifunction switch control.

F9Q

F9Q, and 804 or 816 or 818

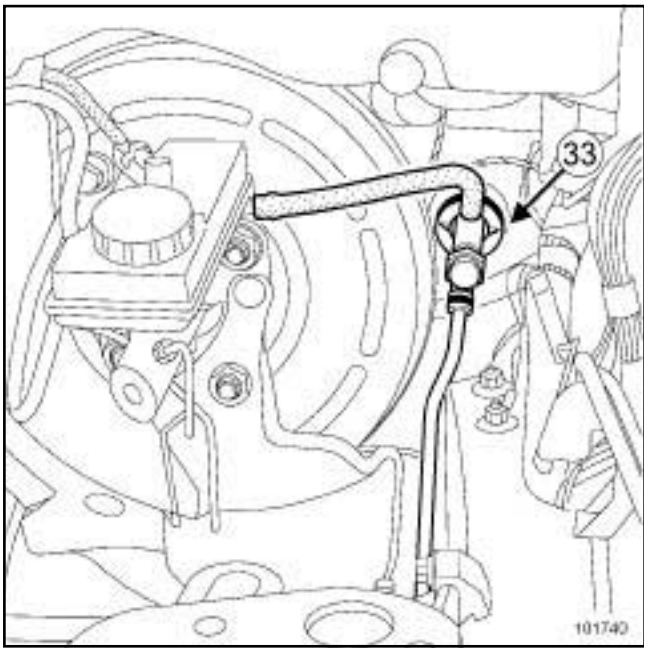

101740

❑ Pull the clutch pipe clip (**33**) .

WARNING
Prepare for the flow of fluid, and protect the surrounding components.

❑ Disconnect the hydraulic clutch supply pipes.

Note:
Plug the pipes to prevent fluid from escaping.

F9Q, and 803

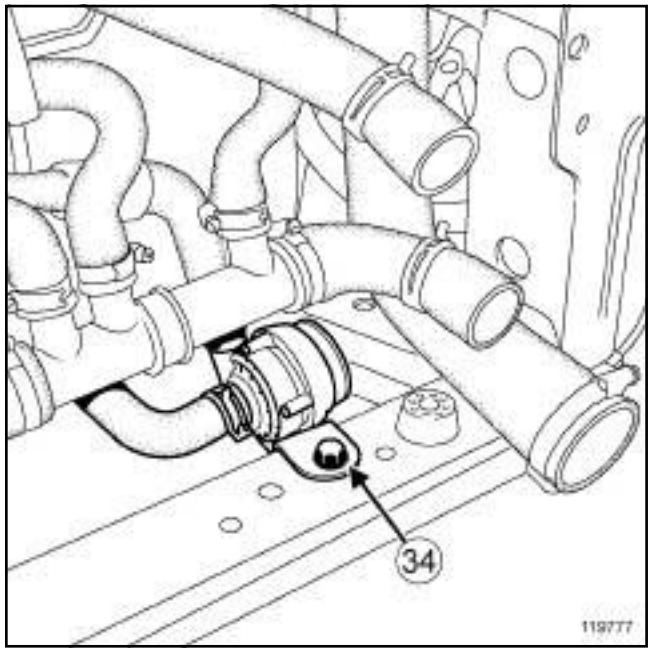

119777

❑ Remove the bolt (**34**) from the electric coolant pump.

❑ Move aside the electric coolant pump.

F9Q

F9Q, and 804 or 816 or 818

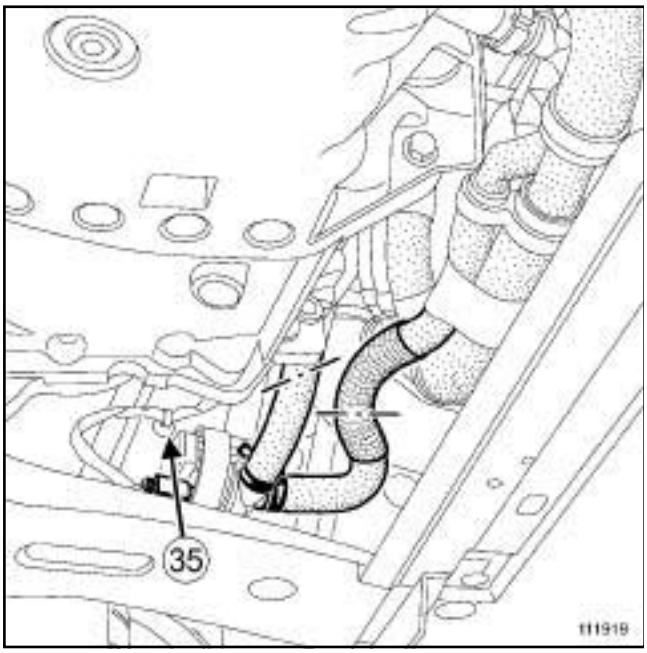

111919

❑ Unclip the wiring of the electric coolant pump (**35**) .

❑ Remove the electric coolant pump clips on the side reinforcement.

❑ Move aside the electric coolant pump.

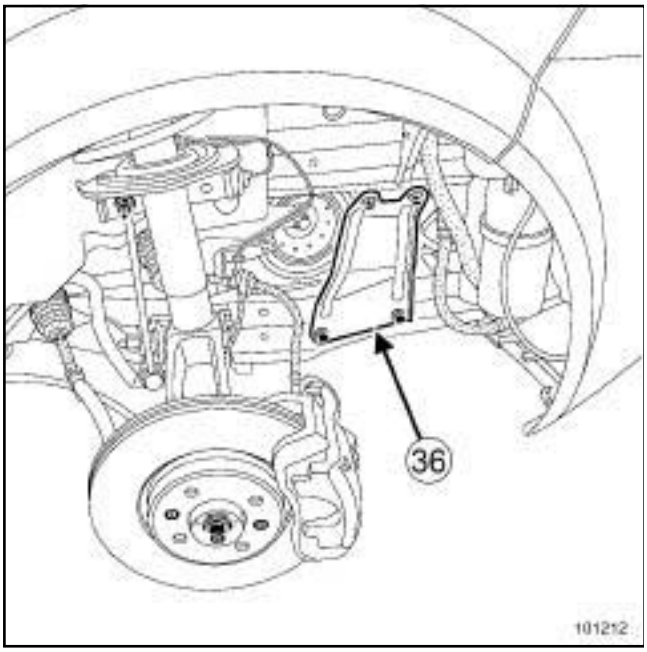

101212

❑ Remove the side reinforcements (**36**) .

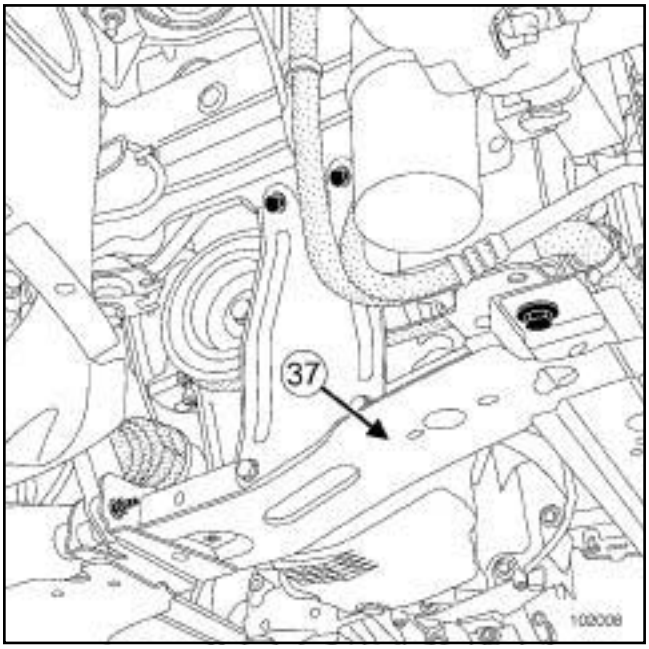

102008

❑ Remove:

- the front right-hand driveshaft (see **Front right-hand wheel driveshaft: Removal - Refitting**) (29A, Driveshafts),
- the front left-hand driveshaft (see **Front left-hand wheel driveshaft: Removal - Refitting**) (29A, Driveshafts),
- the exhaust downpipe nuts,
- the lower engine tie-bar (see **19D**, **Engine mounting**, **Lower engine tie-bar: Removal - Refitting**, page **19D-36**) ,
- the half-subframe bolts,
- the half-subframe nuts,
- the half-subframe (**37**) .

F9Q

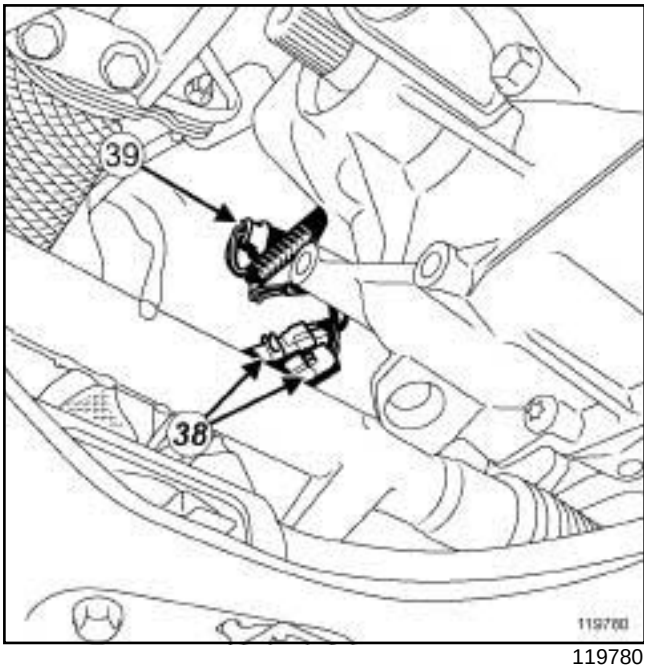

119780

❑ Disconnect:

- the connectors (**38**) from the particle filter temperature sensors,
- the particle filter pressure sensor connector (**39**) .

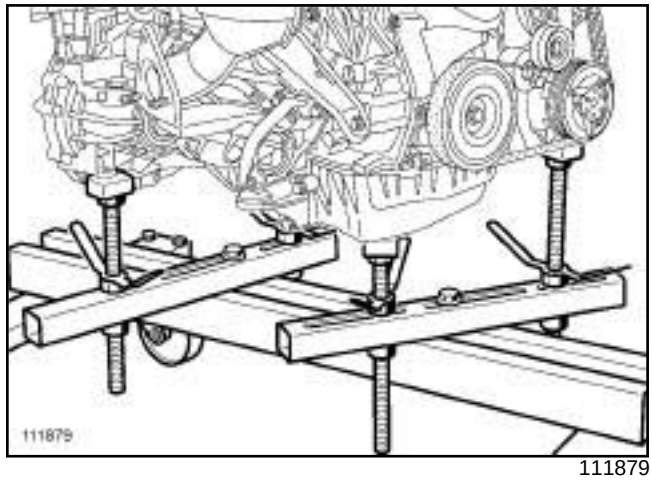

111879

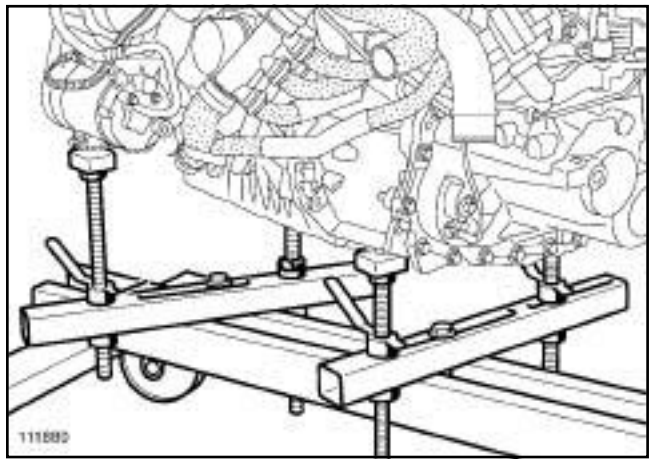

111880

❑ Position the **(Mot. 1390)**.

F9Q

II - OPERATION FOR REMOVAL OF PART CONCERNED

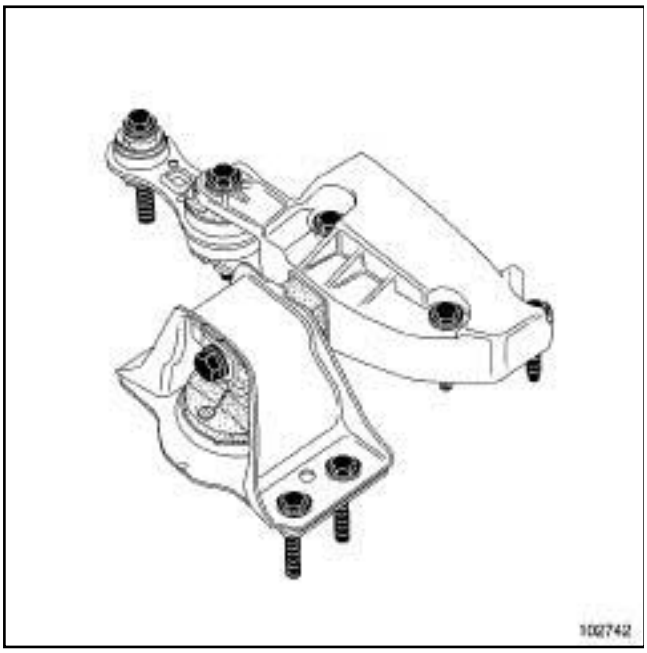

102742

F9Q 804

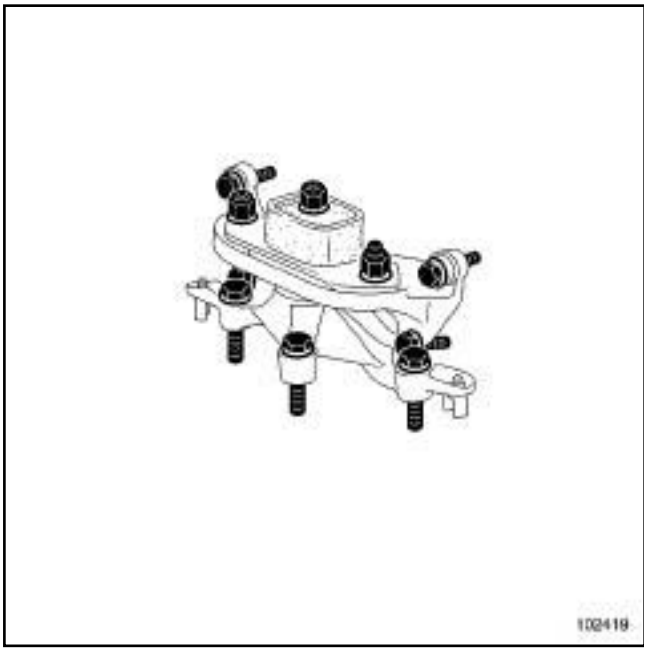

102419

F9Q 803

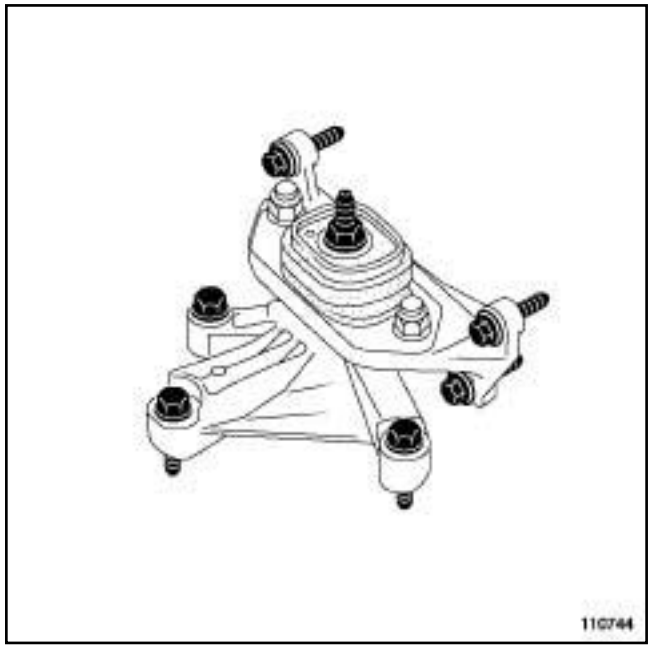

110744

❑ Mark the suspended engine mounting in relation to the body.

❑ Remove:

- the right-hand suspended engine mounting (see **19D**, **Engine mounting**, **Right-hand suspended engine mounting: Removal - Refitting**, page **19D-20**) ,
- the left-hand suspended engine mounting (see **19D**, **Engine mounting**, **Left-hand suspended engine mounting: Removal - Refitting**, page **19D-12**) .

❑ Turn the « engine - gearbox » assembly to remove it.

❑ Remove the « engine and gearbox » assembly.

REFITTING

I - REFITTING PREPARATION OPERATION

❑ For engine replacements (see **Standard replacement**) (Technical Note 6007A, 10A, Engine and cylinder block assembly).

II - REFITTING OPERATION FOR PART CONCERNED

❑ Position the « engine-gearbox » assembly in the vehicle.

F9Q

❑ Refit:

- the left-hand suspended engine mounting (see **19D**, **Engine mounting**, **Left-hand suspended engine mounting: Removal - Refitting**, page **19D-12**) ,
- the right-hand suspended engine mounting (see **19D**, **Engine mounting**, **Right-hand suspended engine mounting: Removal - Refitting**, page **19D-20**) .

❑ Remove the tool **(Mot. 1390)**.

III - FINAL OPERATION

❑ Connect:

- the particle filter temperature sensor connectors,
- the particle filter pressure sensor connector.

❑ Apply **HIGH STRENGTH THREAD LOCK** (see **Vehicle: Parts and ingredients for the repairwork**) (04B, Consumables - Products) on the bolts of the half-subframe.

❑ Refit the half sub-frame.

❑ Torque tighten:

- the **half-subframe bolts (105 N.m)**,
- the **half-subframe nuts (21 N.m)**.

❑ Refit:

- the lower engine tie-bar (see **19D**, **Engine mounting**, **Lower engine tie-bar: Removal - Refitting**, page **19D-36**) ,
- the exhaust downpipe nuts,
- the front right-hand driveshaft (see **Front right-hand wheel driveshaft: Removal - Refitting**) (29A, Driveshafts),
- the front left-hand driveshaft (see **Front left-hand wheel driveshaft: Removal - Refitting**) (29A, Driveshafts),
- the side reinforcements.

❑ Torque tighten the **side stiffener bolts (21 N.m)**.

F9Q, and 803

❑ Fit the electric coolant pump.

❑ Clip the multifunction switch control cable on to the automatic transmission.

F9Q, and 804 or 816 or 818

❑ Fit the electric coolant pump.

❑ Refit the electric coolant pump clips to the side reinforcement.

❑ Clip on the electric coolant pump wiring.

❑ Connect the clutch pipe.

❑ Push on the clutch pipe clip.

❑ Add the brake fluid to the brake fluid reservoir.

❑ Bleed the clutch control (see **Clutch circuit: Bleeding**) (37A, Mechanical component controls).

❑ Clip on the two manual gearbox control cables.

❑ Connect the heater matrix pipes to the water chamber.

❑ Refit the brake servo pipe to the vacuum pump.

❑ Connect the pre-postheating unit connector.

❑ Refit the earth terminal.

F9Q, and 803

❑ Connect the automatic transmission computer connector.

❑ Connect the engine accessories unit connectors.

❑ Refit:

- the relay box,
- the fuse holder,
- the engine accessories unit mounting.

❑ Remove the plugs from the openings.

❑ Connect:

- the water detection sensor connector,
- the fuel supply pipe,
- the fuel return pipe.

❑ Refit the cooling assembly.

❑ Connect:

- the intercooler air inlet pipe,
- the top and bottom cooling pipes.

❑ Torque tighten the **intercooler air inlet pipe clip (5.5 N.m)**.

F9Q

❏ Fit the clip of the cooling radiator top pipe.

❏ Connect:

- the fan assembly resistor connector,
- the fan assembly connector.

❏ Clip the electrical wiring onto the fan assembly.

AIR CONDITIONING or CLIMATE CONTROL

❏ Remove the plugs on the pipes, dehydrator reservoir and condenser.

❏ Connect:

- the evaporator-condenser connecting pipe on the condenser side,
- the condenser-compressor connecting pipe on the condenser side,
- the compressor-dehydrator reservoir connecting pipe on the dehydrator reservoir side.

❏ Refit:

- the condenser - evaporator connecting pipe bolt on the condenser side,
- the condenser-compressor connecting pipe bolt on the condenser side,
- the bolt for the compressor-dehydrator reservoir connecting pipe, on the dehydrator reservoir side.

❏ Connect the pressure sensor connector to the evaporator-condenser connecting pipe on the condenser side.

❏ Clip the pressure sensor electrical wiring on the fan assembly.

F9Q, and 804 or 816 or 818

❏ Connect the pipes of the expansion bottle on the cooling radiator side.

❏ Fit the clip of the expansion bottle pipes on the cooling radiator side.

F9Q, and 803

❏ Connect:

- the expansion bottle top pipe on the cooling radiator side,
- the expansion bottle bottom pipe on the expansion bottle side.

❏ Fit:

- the clip of the expansion bottle top pipe on the cooling radiator side,
- the clip of the expansion bottle bottom pipe on the expansion bottle side.

❏ Connect the intercooler air outlet pipe.

❏ Torque tighten the **intercooler air outlet pipe clip (5.5 N.m)**.

❏ Refit the front end panel.

❏ Torque tighten:

- the **front end panel upper bolts (21 N.m)**,
- the **front end panel lower bolts (44 N.m)**.

❏ Connect the screen washer pipes.

❏ Refit the clips.

❏ Fit the bonnet opening cable.

❏ Connect the engine accessories unit connectors.

❏ Refit:

- the engine accessories unit cover,
- the side reinforcements of the half-subframe.

❏ Torque tighten the **half-subframe side reinforcement bolts (21 N.m)**.

❏ Refit:

- the front bumper (see **Front bumper: Removal - Refitting**) (55A, Exterior protection),
- the front section of the front wheel arch liners (see **Front wheel arch liner: Removal - Refitting**) (55A, Exterior protection),
- the front wheels (see **Wheel: Removal - Refitting**) (35A, Wheels and tyres),
- the air filter unit (see **12A**, **Fuel mixture**, **Air filter unit: Removal - Refitting**, page **12A-11**) ,
- the battery tray (see **Battery tray: Removal - Refitting**) (80A, Battery),

F9Q

- the battery (see **Battery: Removal - Refitting**) (80A, Battery).

❑ Fill up the engine oil (see **10A**, **Engine and cylinder block assembly**, **Engine oil: Draining - Refilling**, page **10A-43**) .

F9Q, and 804 or 816 or 818

❑ Fill the manual gearbox (see **Manual gearbox oil: Draining - Refilling**) (21A, Manual gearbox).

AIR CONDITIONING or CLIMATE CONTROL

❑ Fill the refrigerant circuit using a **refrigerant charging station** (see **Coolant circuit Draining - Refilling**) (62A, Air conditioning).

❑ Fill and bleed the cooling system (see **19A**, **Cooling**, **Cooling circuit: Draining - Refilling**, page **19A-15**) .

❑ Adjust the headlights (see **Halogen headlight: Adjustment**) or (see **Xenon headlights: Adjustment**) .

❑ Refit:

- the engine undertray,
- the engine covers.

K9K, and 732 or 734

Essential special tooling	
Mot. 1202-01	Pliers for large hose clips.
Mot. 1202-02	Pliers for small hose clips.
Mot. 1448	Long nose pliers for hose clips.
Ms. 583	Hose clamp pliers.
Mot. 1390	Support for removing/refitting the engine - gearbox assembly.

Essential equipment
refrigerant charging station

Tightening torques ▽	
left-hand suspended engine mounting nut	**62 N.m**
intercooler air outlet pipe clip	**5.5 N.m**
intercooler air inlet pipe clip	**5.5 N.m**
front end panel lower bolts	**44 N.m**
front end panel upper bolts	**21 N.m**
engine accessories unit bolt	**12 N.m**

IMPORTANT

To avoid all risk of damage to the systems, apply the safety and cleanliness instructions and operation recommendations before carrying out any repair:

- (see **13B**, **Diesel injection**, **Diesel injection: Precautions for repair**, page **13B-12**) ,
- (see **Vehicle: Precautions for repair**) (01D, Mechanical introduction).

IMPORTANT

Wear leaktight gloves (Nitrile type) for this operation.

WARNING

To prevent impurities from entering the circuit, place protective plugs on all fuel circuit components exposed to the open air.

WARNING

To avoid any corrosion or damage, protect the areas on which fuel is likely to run.

WARNING

Keep the pipe unions away from contaminated areas.

WARNING

To prevent moisture from entering the system, place plugs on the cold loop components which are open to the air.

REMOVAL

I - REMOVAL PREPARATION OPERATION

❑ Position the vehicle on a two-post lift (see **Vehicle: Towing and lifting**) (02A, Lifting equipment).

❑ Remove:

- the engine covers,
- the battery (see **Battery: Removal - Refitting**) (80A, Battery),
- the battery tray (see **Battery tray: Removal - Refitting**) (80A, Battery),
- the front wheels (see **Wheel: Removal - Refitting**) (35A, Wheels and tyres),
- the front section of the front wheel arch liner (see **Front wheel arch liner: Removal - Refitting**) (55A, Exterior protection),
- the engine undertray bolts,
- the engine undertray.

❑ Drain:

- the gearbox (see **Manual gearbox oil: Draining - Refilling**) (21A, Manual gearbox),
- the engine (see **10A**, **Engine and cylinder block assembly**, **Engine oil: Draining - Refilling**, page **10A-43**) ,

K9K, and 732 or 734

- the refrigerant circuit using a **refrigerant charging station** (see **Coolant circuit Draining - Refilling**) (62A, Air conditioning).

❑ Remove:

- the front bumper (see **Front bumper: Removal - Refitting**) (55A, Exterior protection),
- the air filter unit (see **12A**, **Fuel mixture**, **Air filter unit: Removal - Refitting**, page **12A-11**) .

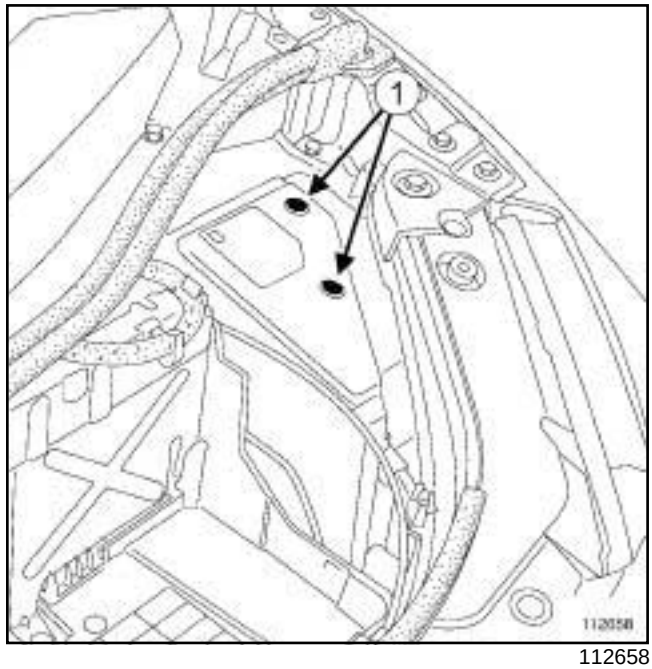

112658

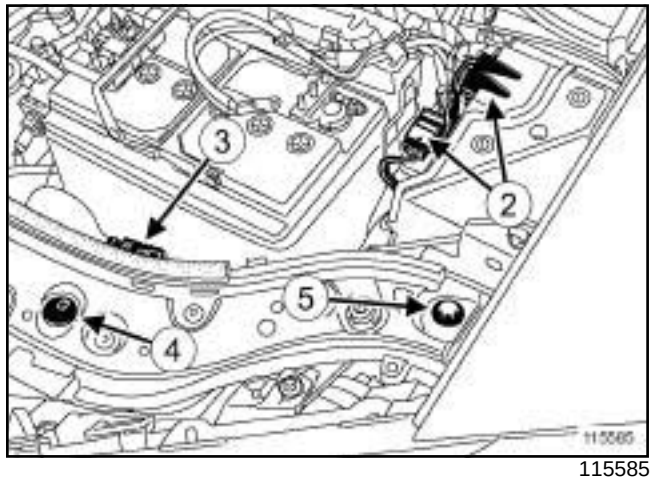

115585

❑ Remove:

- the engine accessories unit cover bolts (**1**) ,
- the engine accessories unit cover.

❑ Disconnect the connectors (**2**) from the engine accessories unit.

❑ Unclip the bonnet opening cable (**3**) ,

❑ Remove:

- the front end panel clips (**4**) ,
- the front end panel upper bolts (**5**) .

❑ Disconnect the screen washer pipes.

K9K, and 732 or 734

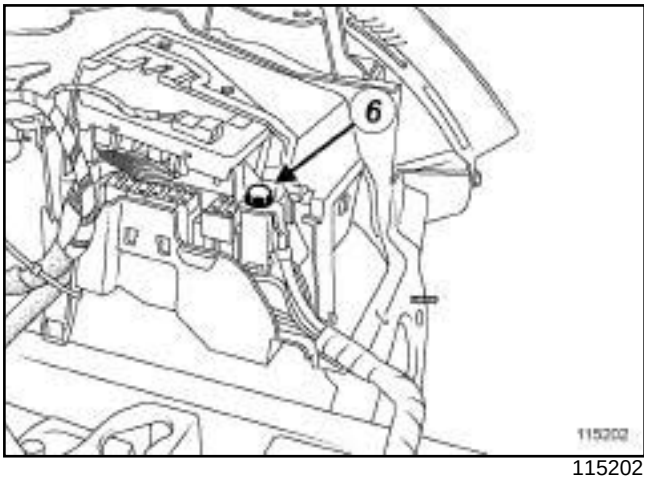

115202

❑ Remove the engine accessories unit bolt (**6**) .

❑ Remove the engine accessories unit.

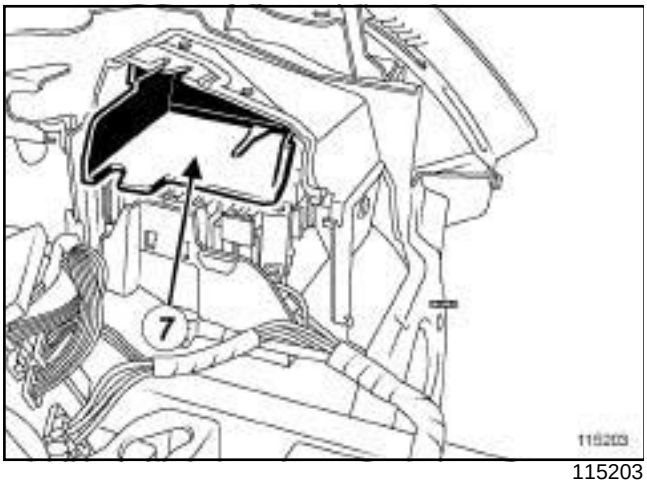

115203

❑ Remove the engine accessories unit support (**7**) .

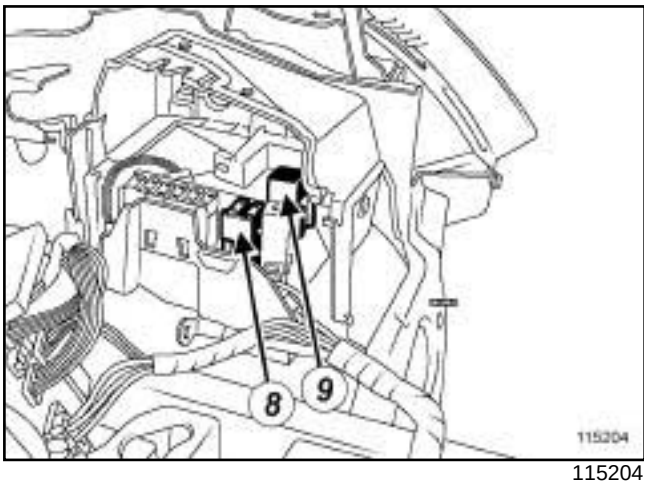

115204

❑ Remove:

- the fuse holder (**8**) ,
- the relay box (**9**) .

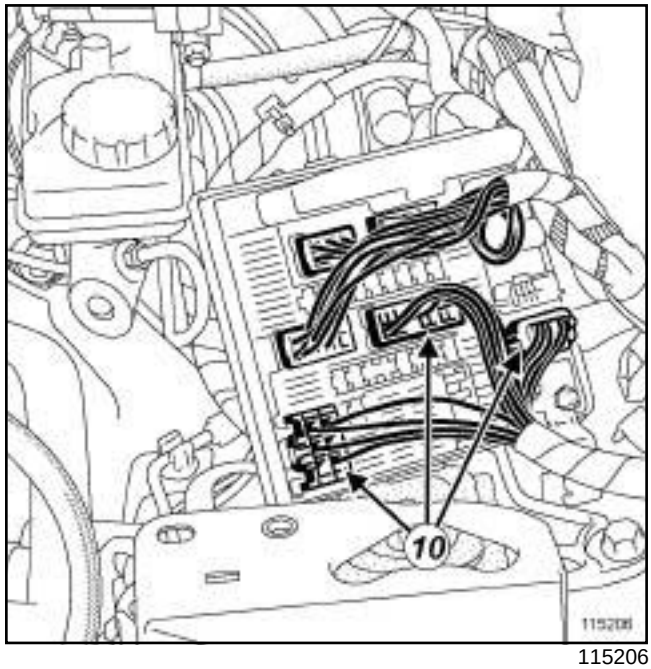

115206

❑ Disconnect the engine accessories unit connectors (**10**) .

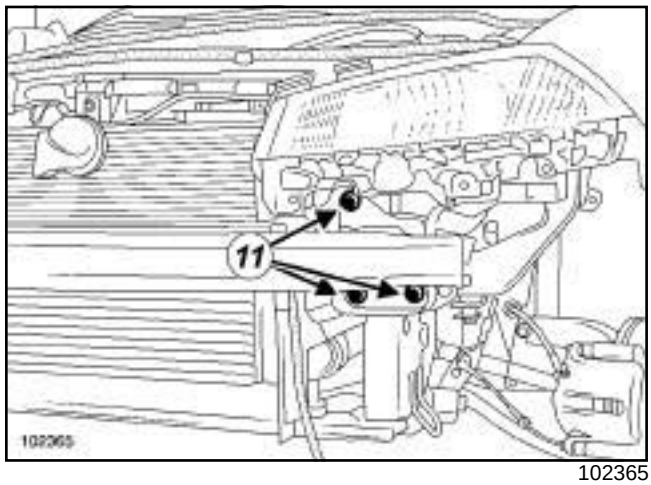

102365

❑ Remove:

- the front end panel lower bolts (**11**) ,
- the front of the vehicle.

❑ Drain the engine cooling system (see **19A**, **Cooling**, **Cooling circuit: Draining - Refilling**, page **19A-15**) .

K9K, and 732 or 734

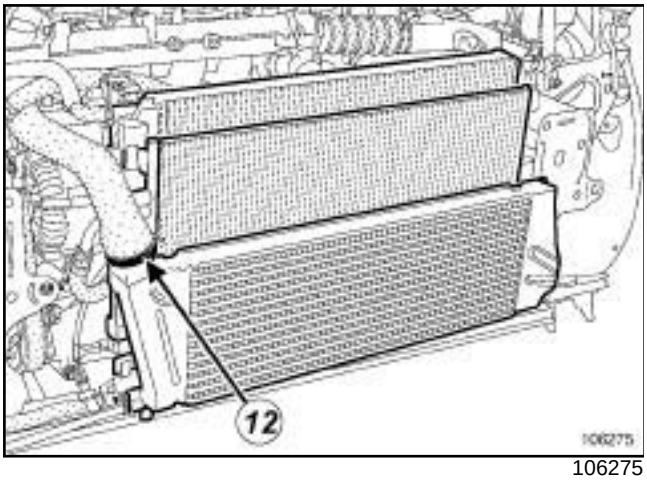

106275

- ❑ Undo the clip (**12**) for the air-air intercooler air inlet pipe at the air-air intercooler end.
- ❑ Disconnect the air-air intercooler air inlet pipe at the air-air intercooler end.

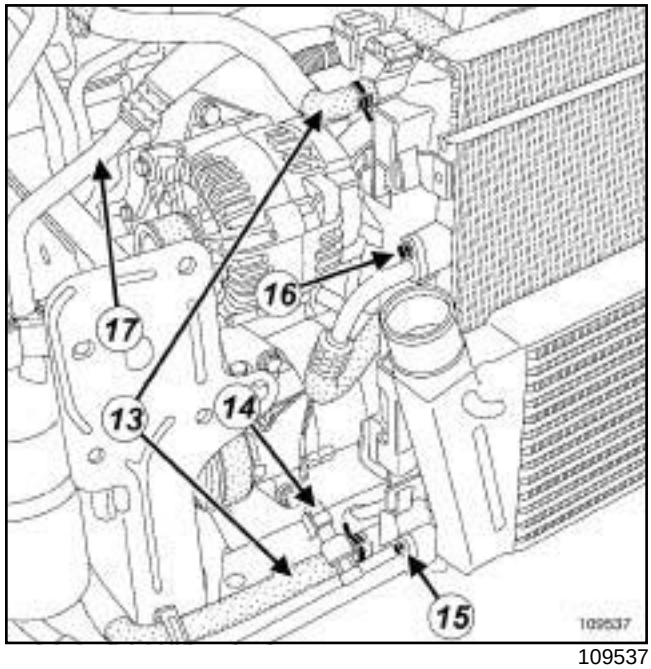

109537

- ❑ Separate the clip on the cooling hoses between the expansion bottle and the cooling radiator on the cooling radiator side using the **(Mot. 1202-01)** or **(Mot. 1202-02)** or **(Mot. 1448)**.
- ❑ Disconnect:
  - the cooling hoses between the expansion bottle and the cooling radiator (**13**) at the cooling radiator end,
  - the evaporator-condenser connecting pipe pressure sensor connector (**14**) .
- ❑ Remove:
  - the bolt (**15**) from the evaporator-condenser connecting pipe, on the condenser side,
  - the bolt (**16**) from the condenser-compressor connection pipe, on the condenser side,
  - the bolt (**17**) from the compressor-dehydrator reservoir connecting pipe, on the dehydrator reservoir side.

K9K, and 732 or 734

❑ Disconnect:

- the evaporator-condenser connecting pipe on the condenser side,
- the condenser-compressor connecting pipe on the condenser side,
- the compressor-dehydration canister connecting pipe on the dehydrator reservoir side.

WARNING
To prevent moisture from entering the system, place plugs on the cold loop components which are open to the air.

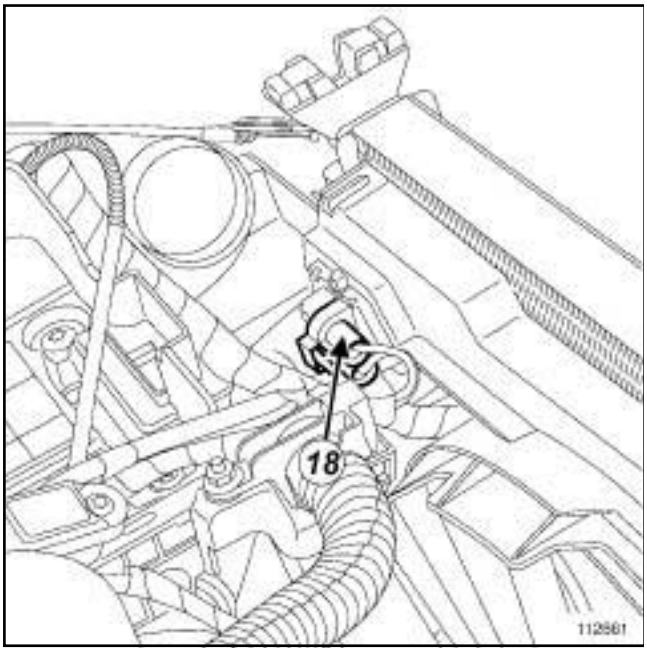

112661

❑ Separate the clip on the cooling radiator top hose using the tool **(Mot. 1202-01)** or **(Mot. 1202-02)** or **(Mot. 1448)**.

❑ Disconnect:

- the fan assembly resistor connector (**18**) ,
- the cooling radiator top hose,
- the fan assembly connector.

K9K, and 734

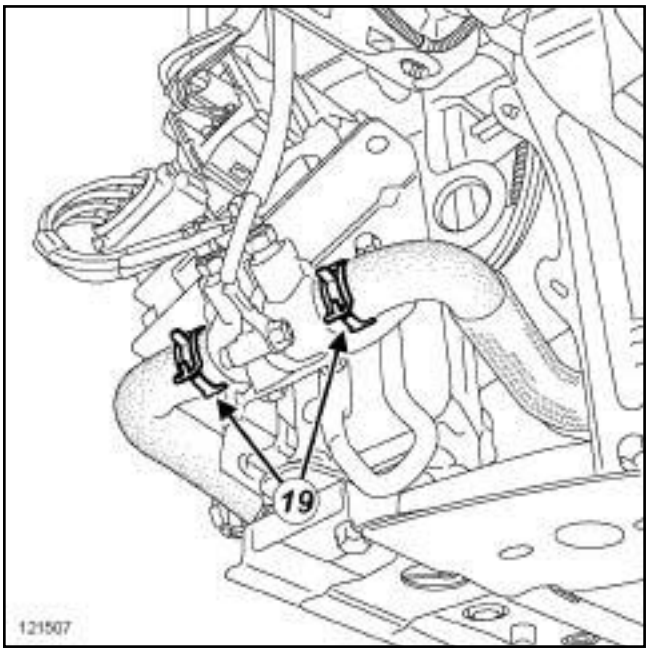

121507

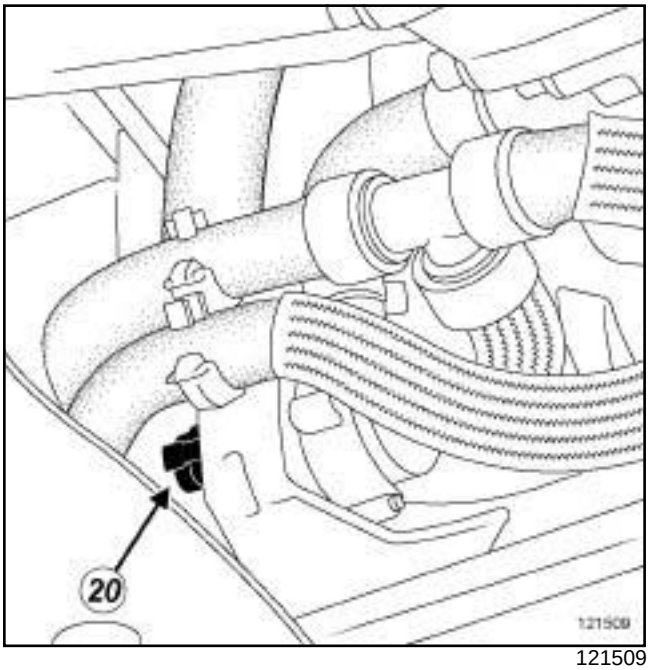

121509

❑ Separate the clips (**19**) on the cooling hoses of the thermoplunger unit using the tool **(Mot. 1202-01)** or **(Mot. 1202-02)** or **(Mot. 1448)**.

❑ Disconnect:

- the cooling hoses from the thermoplunger unit,
- the electric coolant pump connector (**20**) .

K9K, and 732 or 734

❑ Unclip the electrical wiring from the fan assembly.

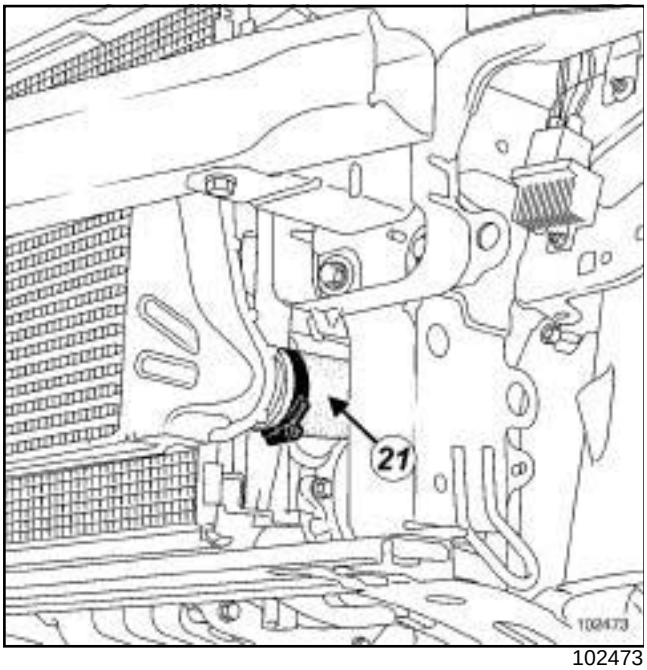

102473

❑ Loosen the clip on the intercooler air outlet pipe.

❑ Disconnect the intercooler air outlet pipe (**21**) at the intercooler end.

❑ Remove the « intercooler - condenser - cooling radiator - engine cooling fan » assembly.

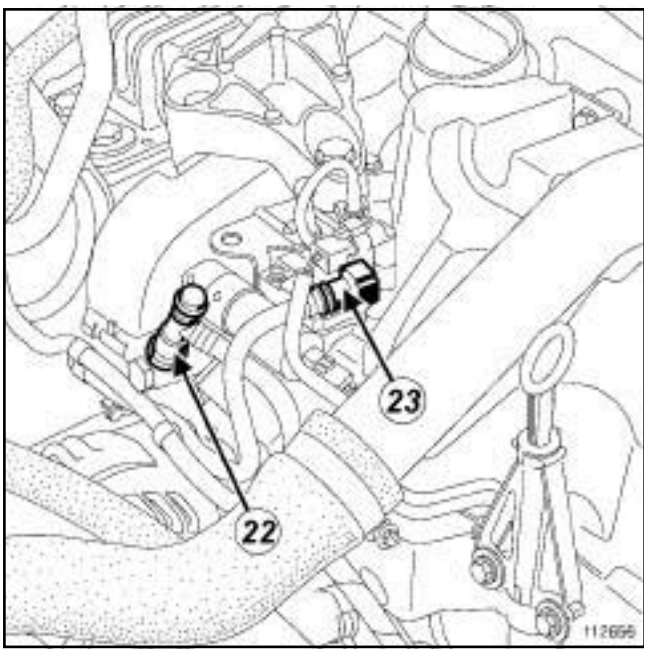

112656

❑ Remove:

- the fuel supply pipe (**22**) ,
- the fuel return pipe (**23**) .

❑ Fit plugs into the openings.

K9K, and 732

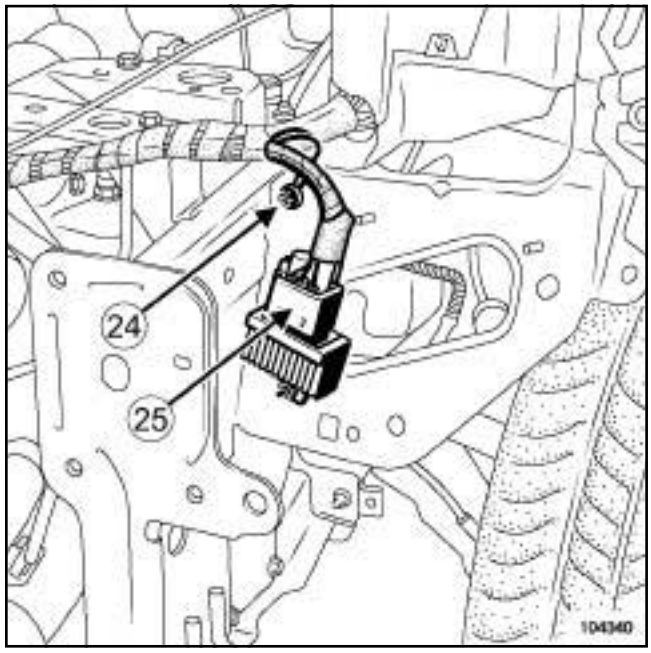

104340

❑ Remove the nut (**24**) from the earth terminal.

❑ Disconnect:

- the pre-postheating unit connector (**25**) ,
- the earth terminal from the body.

K9K, and 732 or 734

K9K, and 734

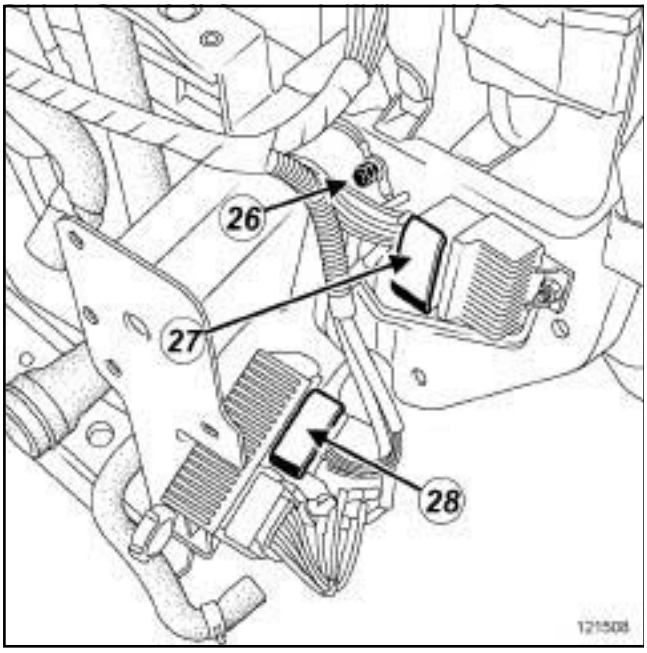

121508

❑ Remove the nut (**26**) from the earth terminal.

❑ Disconnect:

- the pre-postheating unit connector (**27**) ,
- the thermoplunger control unit connector (**28**) ,
- the earth terminal from the body.

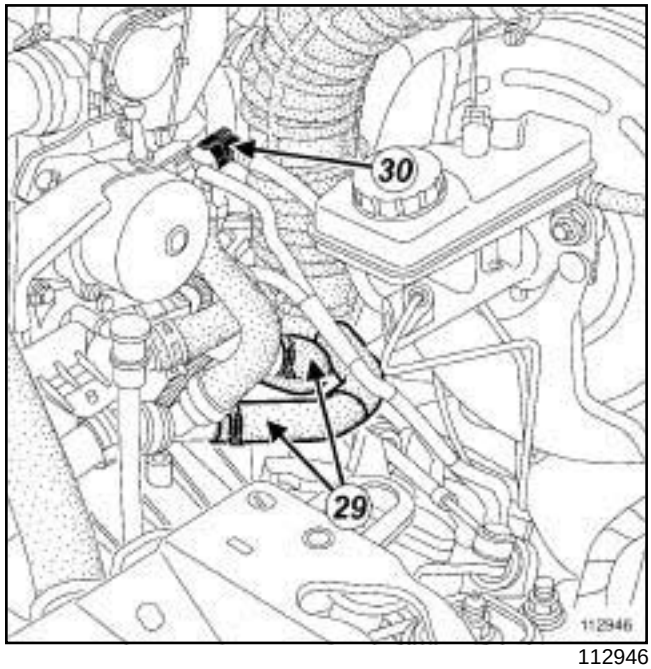

112946

❑ Separate the clips on the heater radiator hoses (**29**) using the tool **(Mot. 1202-01)** or **(Mot. 1202-02)** or **(Mot. 1448)**.

❑ Disconnect:

- the heater radiator hoses,
- the brake servo pipe union (**30**) from the vacuum pump.

K9K, and 732 or 734

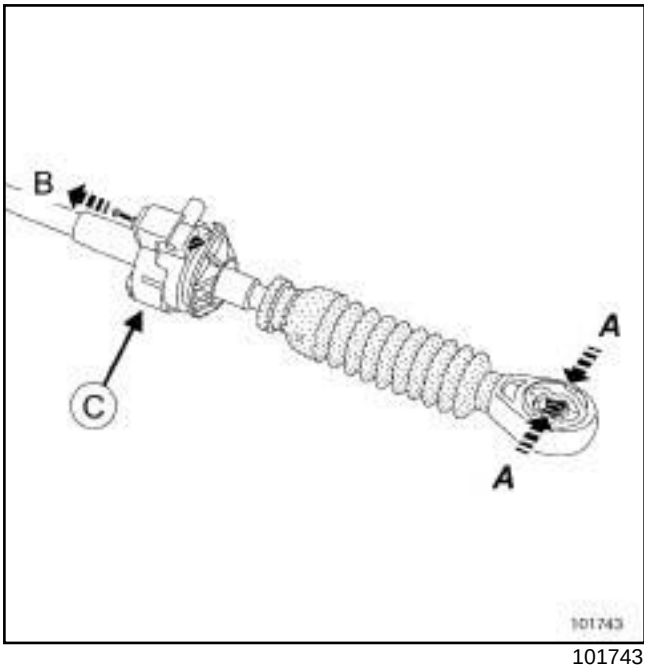

101743

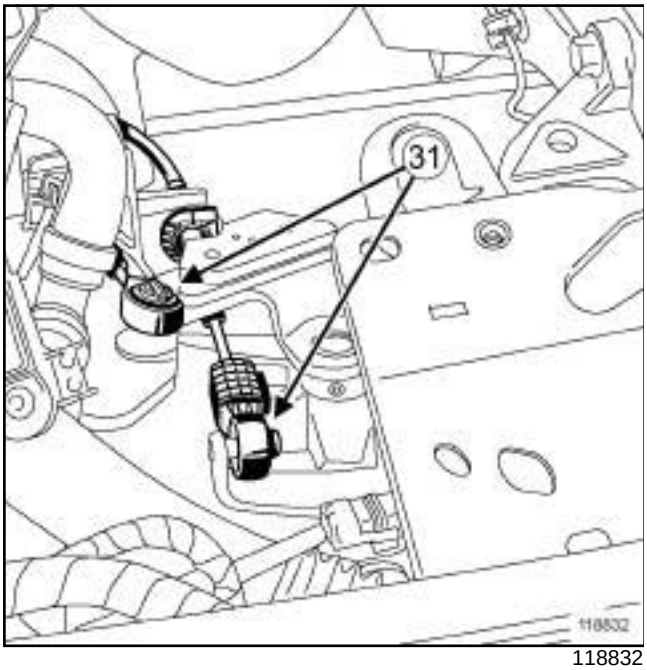

118832

❑ Unclip the gearbox controls (**31**) by:

- pinching the gear control at (**A**) ,
- pulling the pin at (**B**) ,
- lifting the gear control at (**C**) .

K9K, and 732

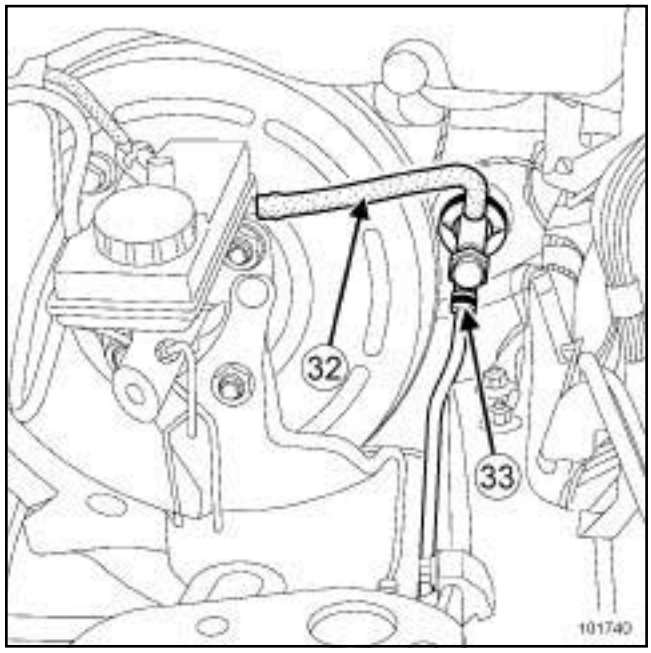

101740

❑ Fit the **(Ms. 583)** onto the clutch master cylinder supply pipe (**32**) .

❑ Pull the clip (**33**) from the clutch master cylinder supply pipe.

❑ Disconnect the clutch hydraulic control pipe.

K9K, and 732 or 734

K9K, and 734

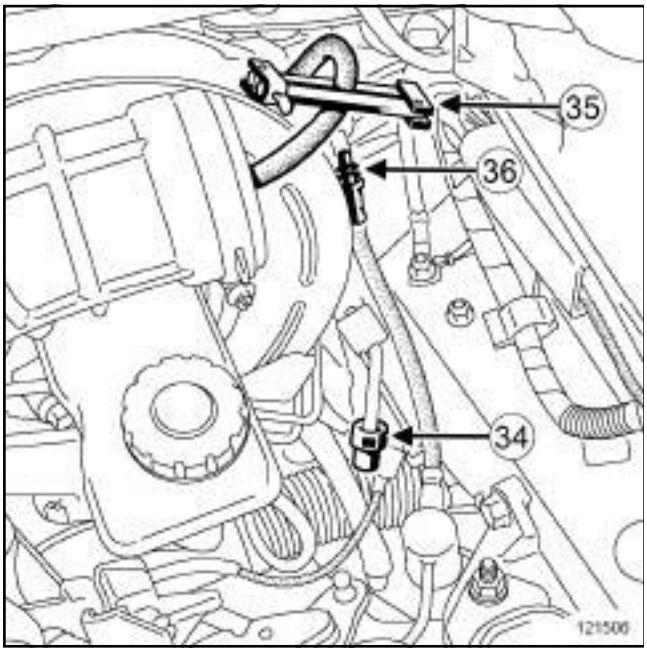

121506

- Disconnect the injector supply pipe union (**34**) on the catalytic pre-converter.
- Fit:
  - blanking plugs,
  - the **(Ms. 583)** (**35**) onto the clutch master cylinder supply pipe.
- Pull the clip (**36**) from the clutch master cylinder supply pipe.
- Disconnect the clutch hydraulic control pipe.

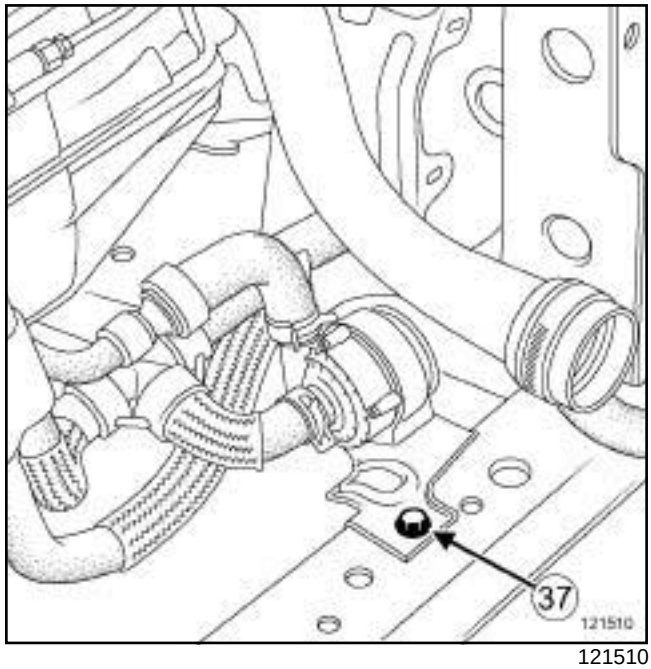

121510

- Remove the electric coolant pump mounting bolt (**37**) .

- Remove:
  - the front right-hand wheel driveshaft (see **Front right-hand wheel driveshaft: Removal - Refitting**) (29A, Driveshafts),
  - the front left-hand wheel driveshaft (see **Front left-hand wheel driveshaft: Removal - Refitting**) (29A, Driveshafts),
  - the radiator mounting cross member (see **Radiator support cross member: Removal - Refitting**) (41A, Front lower structure).

K9K, and 732 or 734

K9K, and 732

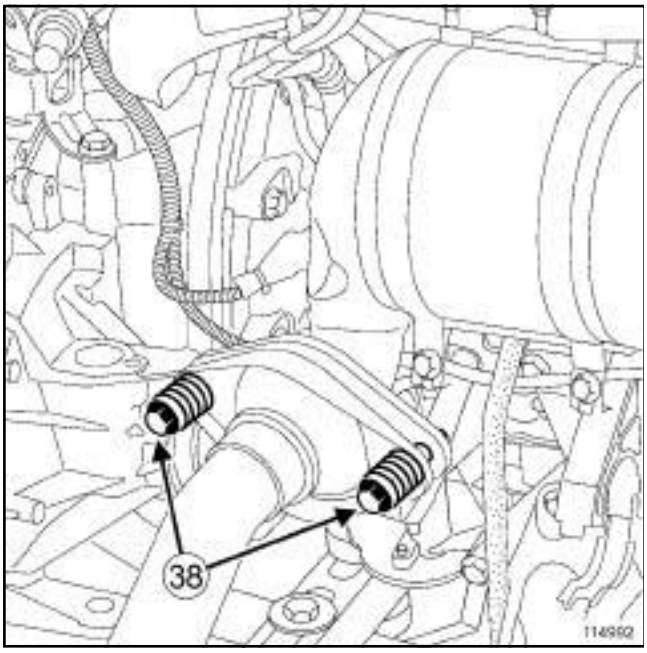

114992

❑ Remove:

- the bolts (**38**) from the exhaust flange,
- the exhaust flange sealing ring.

K9K, and 732 or 734

K9K, and 734

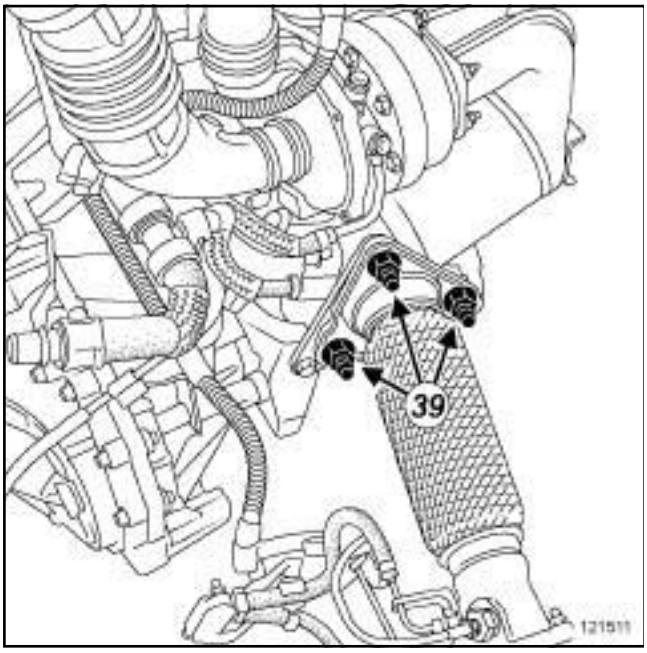

121511

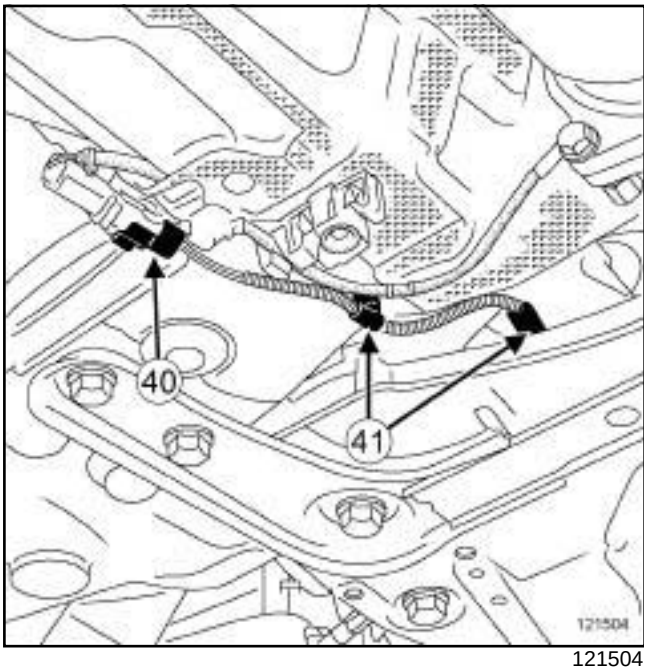

121504

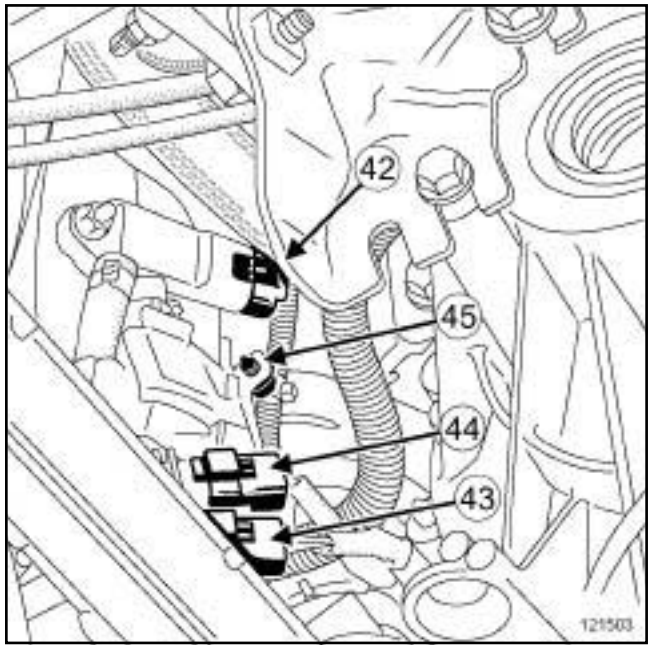

121503

❑ Remove:

- the nuts (**39**) from the exhaust flange,
- the exhaust flange seal.

❑ Disconnect the particle filter upstream temperature sensor connector (**40**) .

❑ Unclip the wiring from the connector of the particle filter upstream temperature sensor at (**41**) .

❑ Disconnect:

- the particle filter pressure sensor connector (**42**) ,
- the particle filter downstream temperature sensor connector (**43**) ,
- the catalytic converter upstream temperature sensor connector (**44**) .

❑ Unclip the wiring of the particle filter pressure sensor at (**45**) .

❑ Remove the lower engine tie-bar (see **19D**, **Engine mounting**, **Lower engine tie-bar: Removal - Refitting**, page **19D-36**) .

K9K, and 732 or 734

II - OPERATION FOR REMOVAL OF PART CONCERNED

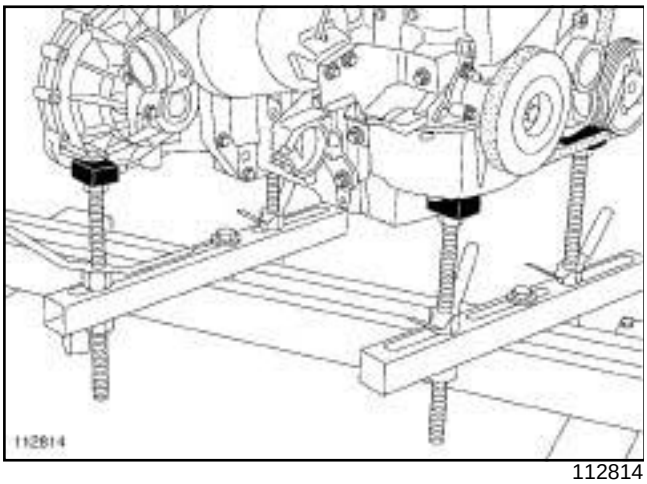

112814

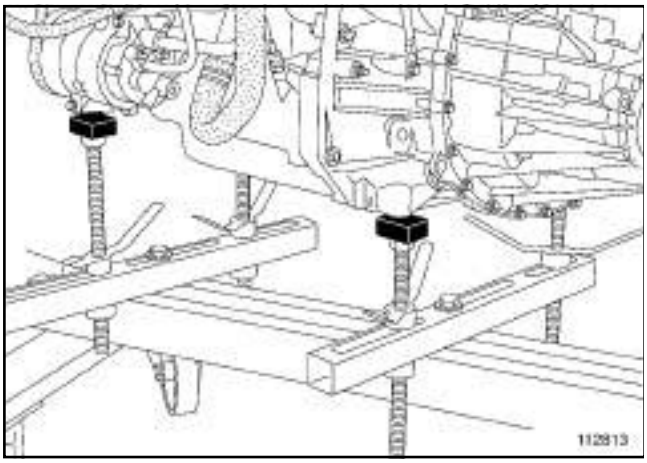

112813

❑ Position the **(Mot. 1390)**.

❑ Remove the right-hand suspended engine mounting (see **19D**, **Engine mounting**, **Right-hand suspended engine mounting: Removal - Refitting**, page **19D-20**) .

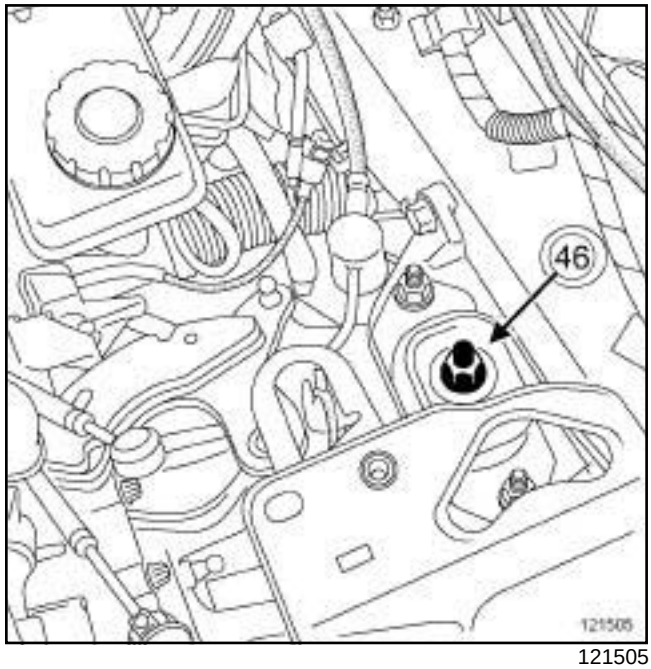

121505

❑ Remove the left-hand suspended engine mounting nut (**46**) .

❑ Turn the « engine - gearbox » assembly to remove it.

❑ Remove the « engine - gearbox » assembly.

REFITTING

I - REFITTING PREPARATION OPERATION

❑ If replacing the engine (see **Standard replacement**) (Technical Note 6006A, 10A, Engine and peripherals).

II - REFITTING OPERATION FOR PART CONCERNED

❑ Position the « engine-gearbox » assembly in the vehicle.

❑ Refit:

- the right-hand suspended engine mounting (see **19D**, **Engine mounting**, **Right-hand suspended engine mounting: Removal - Refitting**, page **19D-20**) ,

- the left-hand suspended engine mounting nut.

❑ Torque tighten the **left-hand suspended engine mounting nut (62 N.m)**.

❑ Remove the tool **(Mot. 1390)**.

K9K, and 732 or 734

III - FINAL OPERATION

❏ Refit the lower engine tie-bar (see **19D**, **Engine mounting**, **Lower engine tie-bar: Removal - Refitting**, page **19D-36**) .

K9K, and 734

❏ Clip on the wiring of the particle filter pressure sensor.

❏ Connect:

- the particle filter pressure sensor connector,
- the particle filter downstream temperature sensor connector,
- the catalytic converter upstream temperature sensor connector.

❏ Clip the wiring onto the connector of the particle filter upstream temperature sensor.

❏ Connect the particle filter upstream temperature sensor connector.

❏ Refit:

- the exhaust flange seal,
- the exhaust flange nuts.

K9K, and 732

❏ Refit:

- the exhaust flange sealing ring,
- the bolts of the exhaust flange.

❏ Refit:

- the radiator mounting cross member (see **Radiator support cross member: Removal - Refitting**) (41A, Front lower structure),
- the front left-hand wheel driveshaft (see **Front left-hand wheel driveshaft: Removal - Refitting**) (29A, Driveshafts),
- the front right-hand wheel driveshaft (see **Front right-hand wheel driveshaft: Removal - Refitting**) (29A, Driveshafts).

K9K, and 734

❏ Refit the electric coolant pump bolt.

❏ Remove the blanking plugs.

❏ Connect the injector supply pipe union to the catalytic pre-converter.

❏ Connect the hydraulic clutch control pipe.

❏ Push the clutch master cylinder supply pipe clip.

❏ Remove the **(Ms. 583)** from the clutch master cylinder supply pipe.

❏ Clip the gearbox controls into place.

❏ Connect:

- the heater radiator hoses,
- the vacuum pump brake servo pipe union.

❏ Fit the clips of the heater radiator hoses using the tool **(Mot. 1202-01)** or **(Mot. 1202-02)** or **(Mot. 1448)**.

K9K, and 734

❏ Connect the connector to the themoplunger control unit.

❏ Connect:

- the pre-postheating unit connector,
- the earth terminal on the body.

❏ Refit the earth terminal nut.

❏ Remove the blanking plugs.

❏ Refit:

- the fuel return pipe,
- the fuel supply pipe,
- the « intercooler - condenser - cooling radiator - engine cooling fan » assembly.

❏ Connect the intercooler air outlet pipe at the intercooler end.

❏ Torque tighten the **intercooler air outlet pipe clip (5.5 N.m)**.

❏ Clip on the fan assembly electrical wiring.

K9K, and 732 or 734

K9K, and 734

❑ Connect:

- the electric coolant pump connector,
- the cooling hoses from the thermoplunger unit.

❑ Fit the clips on the cooling hoses of the thermoplunger unit using the tool **(Mot. 1202-01)** or **(Mot. 1202-02)** or **(Mot. 1448)**.

❑ Connect:

- the fan assembly connector,
- the cooling radiator top hose,
- the cooling radiator bottom hose,
- the fan assembly resistor connector.

❑ Fit:

- the cooling radiator bottom hose on the cooling radiator side using the tool **(Mot. 1202-01)** or **(Mot. 1202-02)** or **(Mot. 1448)**,
- the cooling radiator top hose on the cooling radiator side using the tool **(Mot. 1202-01)** or **(Mot. 1202-02)** or **(Mot. 1448)**.

❑ Remove the blanking plugs from the pipes.

❑ Refit:

- the evaporator-condenser connecting pipe on the condenser side,
- the condenser-compressor connecting pipe on the condenser side,
- the compressor-dehydrator reservoir connecting pipe on the dehydrator reservoir side.

❑ Connect:

- the condenser - evaporator connecting pipe pressure sensor connector,
- the cooling hoses between the expansion bottle and the cooling radiator at the cooling radiator end.

❑ Fit the clips on the cooling hoses between the expansion bottle and the cooling radiator on the cooling radiator side using the tool **(Mot. 1202-01)** or **(Mot. 1202-02)** or **(Mot. 1448)**.

❑ Connect the intercooler air inlet pipe on the intercooler side.

❑ Torque tighten the **intercooler air inlet pipe clip (5.5 N.m)**.

❑ Refit the front end panel.

❑ Torque tighten:

- the **front end panel lower bolts (44 N.m)**,
- the **front end panel upper bolts (21 N.m)**.

❑ Connect the engine accessories unit engine connectors.

❑ Refit:

- the relay box,
- the fuse holder,
- the engine accessories unit mounting,
- the engine accessories unit.

❑ Torque tighten the **engine accessories unit bolt (12 N.m)**.

❑ Connect the screen washer pipes.

❑ Refit the front end panel clips.

❑ Clip the bonnet opening cable.

❑ Connect the engine accessories unit connectors.

❑ Refit:

- the engine accessories unit cover,
- the air filter unit (see **12A**, **Fuel mixture**, **Air filter unit: Removal - Refitting**, page **12A-11**) ,
- the front bumper (see **Front bumper: Removal - Refitting**) (55A, Exterior protection),
- the front section of the front left and right-hand wheel arch liners (see **Front wheel arch liner: Removal - Refitting**) (55A, Exterior protection),
- the front wheels (see **Wheel: Removal - Refitting**) (35A, Wheels and tyres),
- the battery tray (see **Battery tray: Removal - Refitting**) (80A, Battery),
- the battery (see **Battery : Removal - Refitting**) (80A, Battery).

❑

Perform the following operations:

- bleed the clutch (see **Clutch circuit: Bleeding**) (37A, Mechanical component controls),
- top up the brake fluid level in the brake fluid reservoir,
- fill the gearbox (see **Manual gearbox oil: Draining - Refilling**) (21A, Manual gearbox).
- top up the engine oil (see **10A**, **Engine and cylinder block assembly**, **Engine oil: Draining - Refilling**, page **10A-43**) ,

K9K, and 732 or 734

- fill and bleed the cooling circuit (see **19A**, **Cooling**, **Cooling circuit: Draining - Refilling**, page **19A-15**) ,
- fill the refrigerant circuit using the **refrigerant charging station** (see **Coolant circuit Draining - Refilling**) (62A, Air conditioning).

❑ Refit:

- the engine covers,
- the engine undertray.

❑ Adjust the headlights (see **Halogen headlight: Adjustment**) (80B, Headlights) or (see **Xenon headlights: Adjustment**) (80C, Xenon bulbs).

B84 or C84, and F4R, and 774

Essential special tooling	
Mot. 1202-01	Pliers for large hose clips.
Mot. 1202-02	Pliers for small hose clips.
Mot. 1448	Long nose pliers for hose clips.
Mot. 1390	Support for removing/refitting the engine - gearbox assembly.

Essential equipment
refrigerant charging station

Tightening torques ▽	
lower engine tie-bar mounting bolts (on the subframe)	**105 Nm**
lower engine tie-bar mounting bolts (on the engine)	**180 Nm**
suspended mounting upper linkage mounting bolts	**105 Nm**
radiator front cross member mounting bolts	**105 Nm**
radiator rear cross member mounting bolts	**21 Nm**
driveshaft nut	**280 Nm**
front end panel upper mounting bolt	**21 Nm**
front end panel lower mounting bolt	**44 Nm**
wheel mounting bolts	**130 Nm**

WARNING
When replacing an engine following over-revving, always replace the flywheel.

REMOVAL

❑ Position the vehicle on a two-post lift (see **Vehicle: Towing and lifting**) (MR 364, 02A, Lifting equipment).

IMPORTANT
During this operation, secure the vehicle to the lift with a strap to prevent it from becoming unbalanced.

❑ Disconnect the battery (see **Battery: Removal - Refitting**) (MR 364, 80A, Battery).

❑ Remove:

- the engine covers,
- the front wheels,
- the engine undertray,
- the right-hand and left-hand wheel arch liners.

❑ Drain:

- the coolant system using the **refrigerant charging station**,
- the cooling system via the radiator bottom hose using the **(Mot. 1202-01)**, **(Mot. 1202-02)** and **(Mot. 1448)**,
- the gearbox,
- the engine, if necessary.

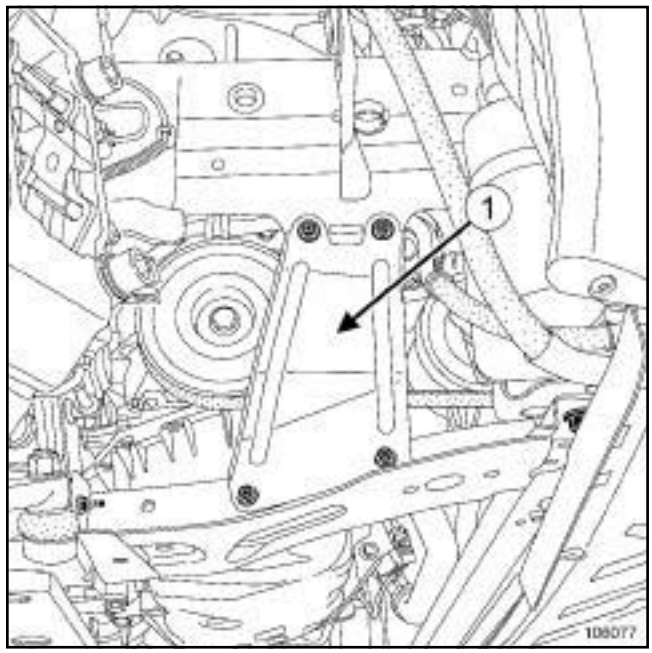

106077

❑ Remove:

- the side stiffeners (**1**) ,
- the bumper mountings,

B84 or C84, and F4R, and 774

- the bumper.

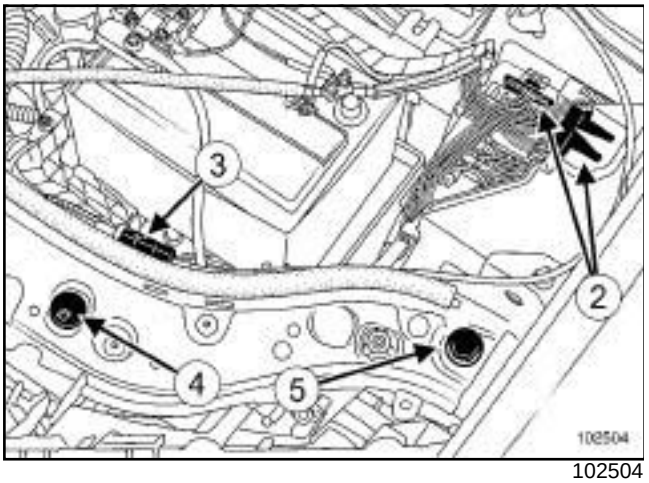

102504

❑ Disconnect the two connectors (**2**) .

❑ Unclip the bonnet opening cable (**3**) .

❑ Remove:

- the clip (**4**) ,
- the mounting (**5**) .

❑ Disconnect the screen washer pipes.

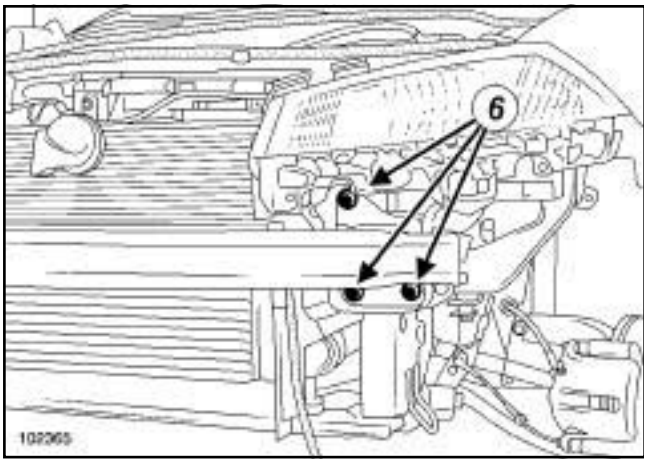

102365

❑ Remove:

- the mounting bolts (**6**) from the front end panel,
- the front end panel.

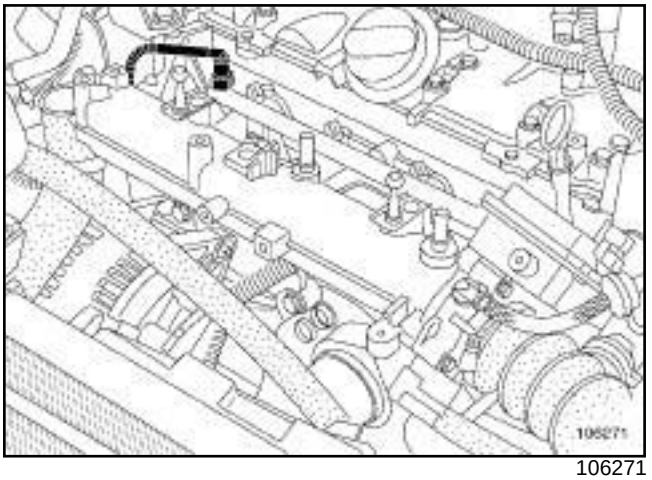

106271

❑ Disconnect:

- the fuel supply pipe to the injector rail,
- the motor-driven fan assembly connector,
- the radiator top hose, using the **(Mot. 1202-01)**, **(Mot. 1202-02)** and **(Mot. 1448)**.

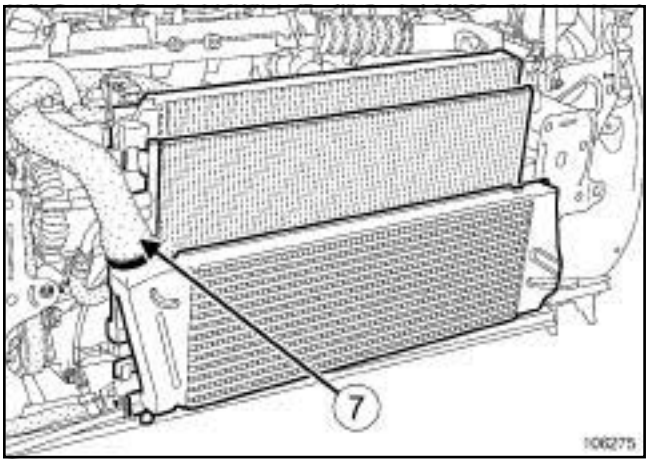

106275

❑ Disconnect the two hoses on the radiator expansion bottle.

❑ Remove:

- the two air conditioning pipes from the condenser,
- the cooling assembly,
- the air conditioning pipe between the air conditioning compressor and the dehydration canister,
- the intercooler hose (**7**) .

WARNING

Plugs must be fitted on the hoses to prevent moisture from entering the system.

B84 or C84, and F4R, and 774

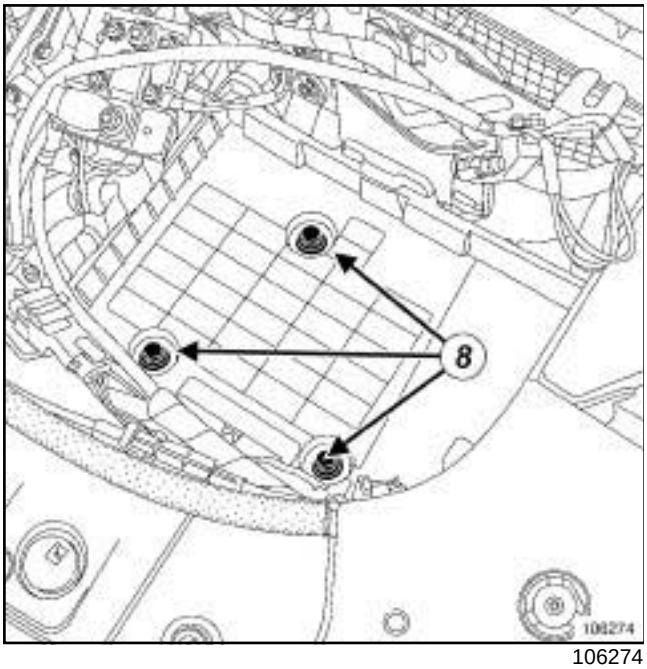

106274

❑ Remove:

- the air resonator,
- the battery (see **Battery: Removal - Refitting**) (MR 364, 80A, Battery),
- the battery tray mounting bolts (**8**) .

❑ Disconnect the computer connectors.

❑ Remove the battery tray.

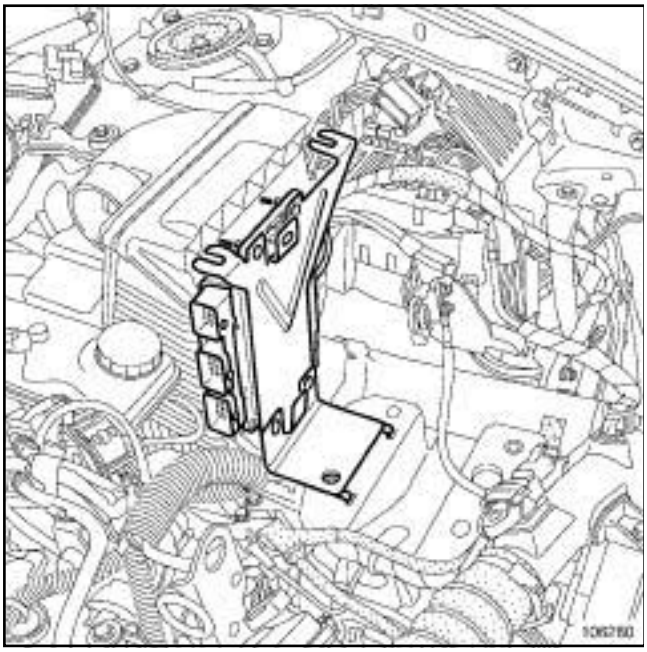

106280

❑ Remove:

- the computer mounting.
- the air filter box.

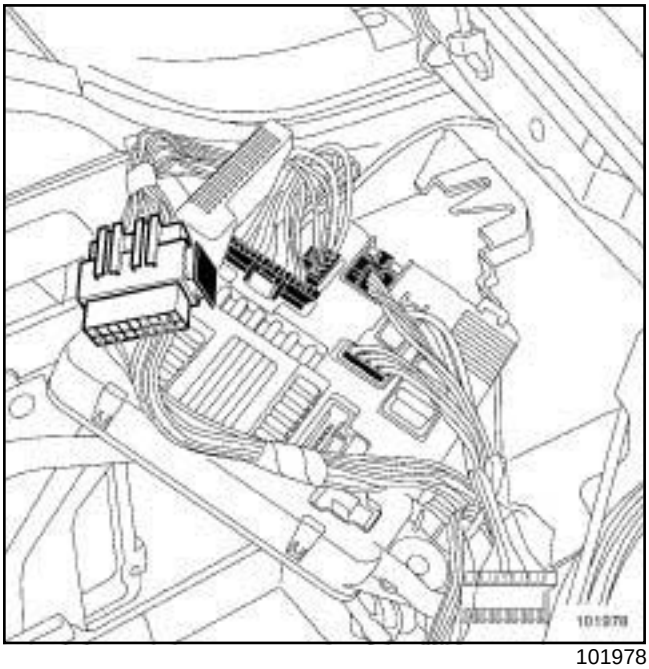

101978

❑ Disconnect:

- the relay plate harness connectors.
- the earth strap on the body.

❑ Remove the brake servo hose.

❑ Disconnect the heater matrix hoses from the radiator tank using the **(Mot. 1202-01)**, **(Mot. 1202-02)** and **(Mot. 1448)**.

B84 or C84, and F4R, and 774

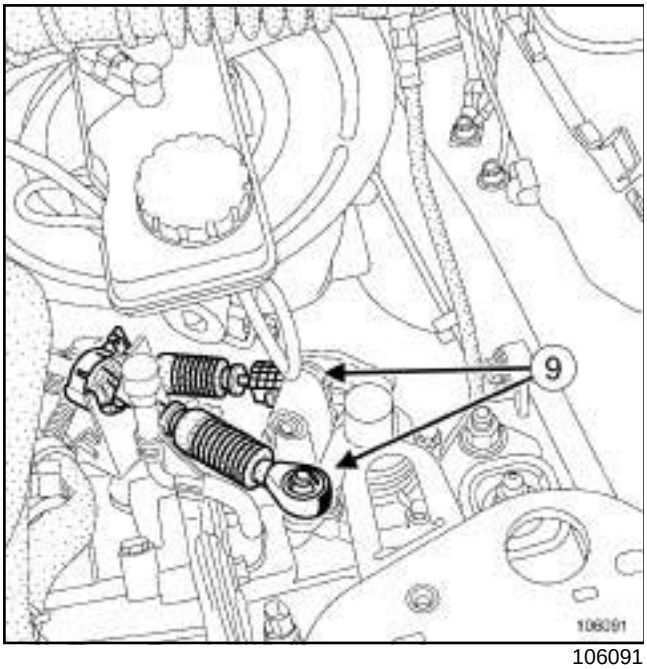

106091

❏ Remove the control cables from the gearbox (**9**) .

WARNING
Do not touch the gearbox slide valve.

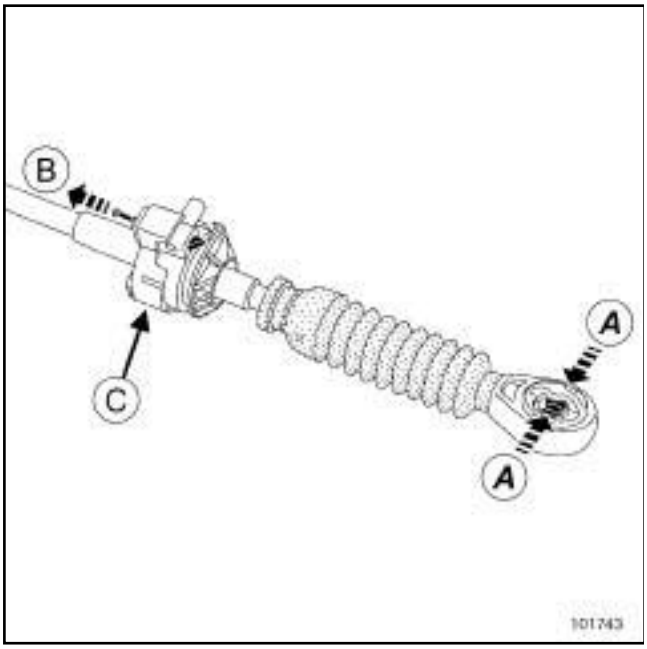

101743

❏ Squeeze the clip (**A**) .

❏ Extract the cable from the ball joint.

❏ Pull the pin at (**B**) .

❏ Remove the control cable from the gearbox at (**C**) .

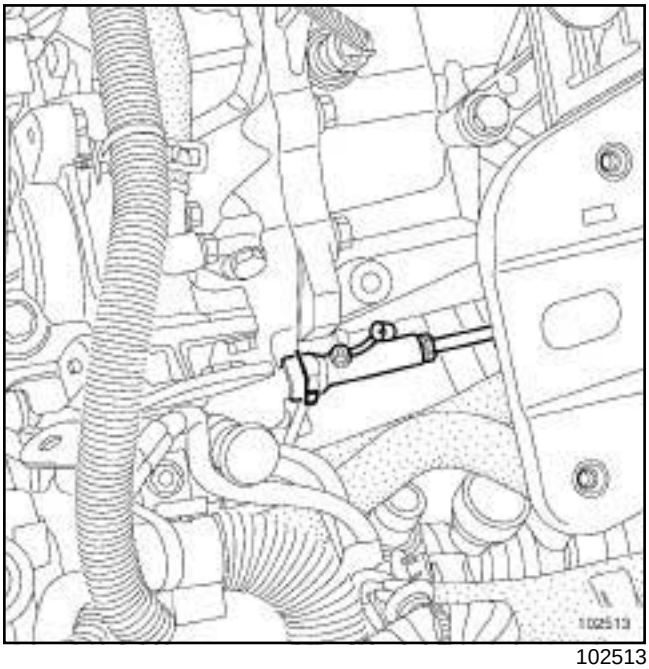

102513

❏ Press the clip.

❏ Disconnect the clutch supply pipe at the bulkhead.

Note:
Plug the pipes to prevent fluid from escaping.

❏ Remove the driveshafts.

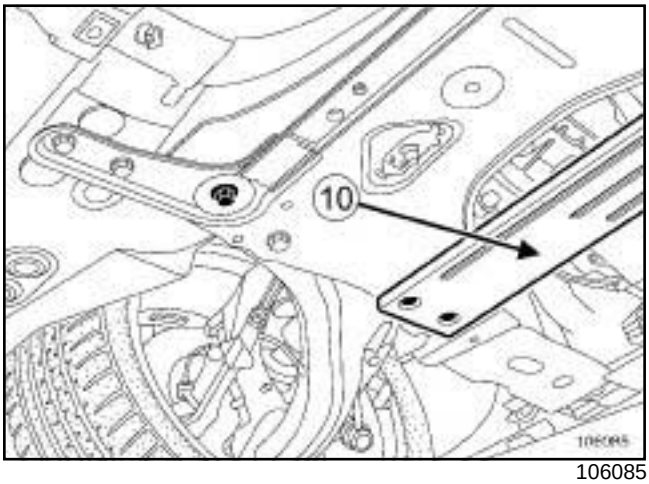

106085

❏ Remove the subframe stiffener strut (**10**) .

B84 or C84, and F4R, and 774

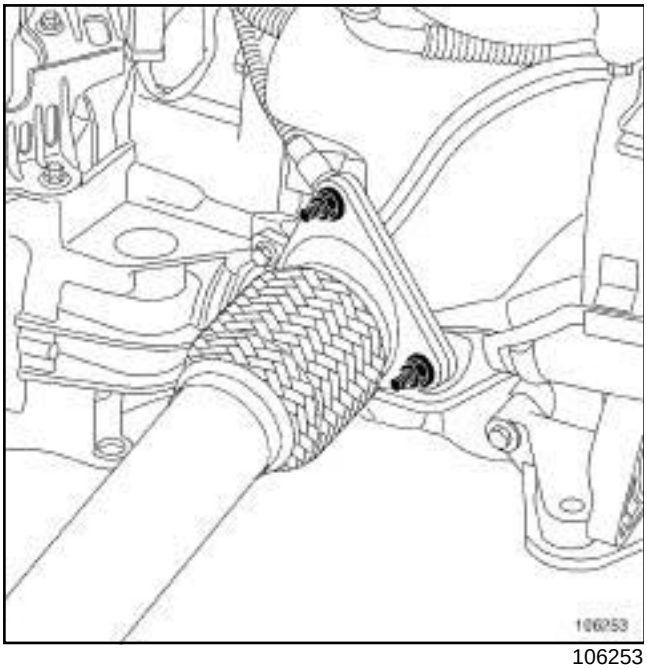

106253

❑ Remove the exhaust downpipe mountings.

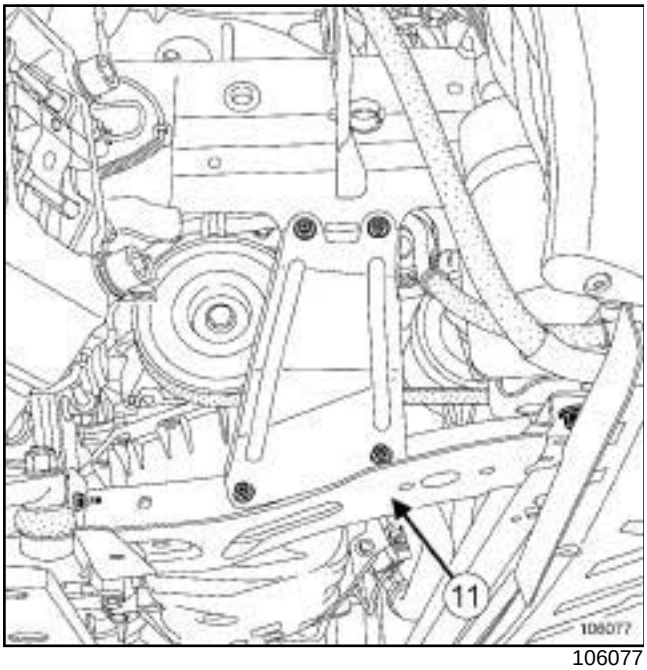

106077

❑ Remove:

- the radiator lower cross member (**11**) ,
- the lower engine tie-bar,
- the upper engine tie-bar.

❑ Set up the workshop hoist equipped with a load positioner or chain.

IMPORTANT
The chain must be a minimum of **90 cm** in length.

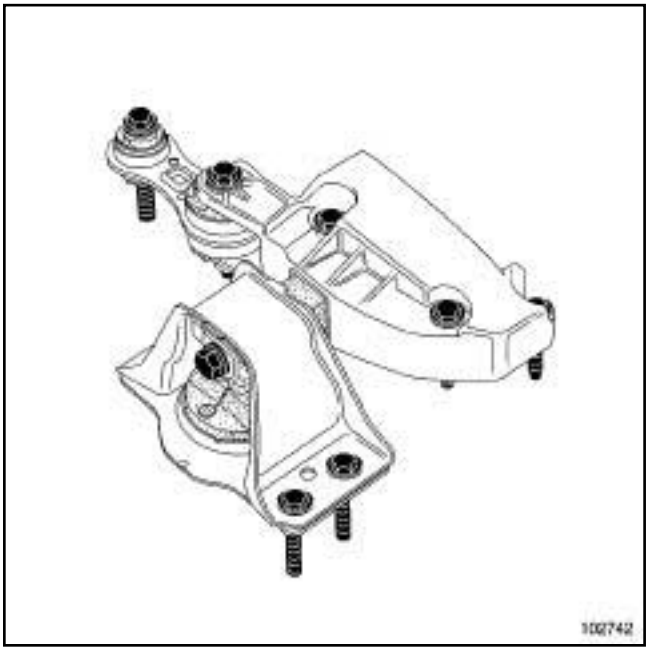

102742

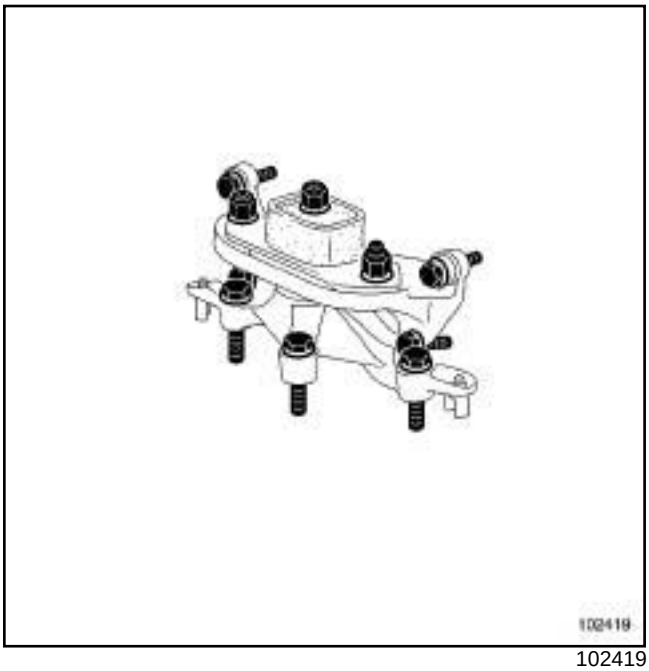

102419

❑ Make a mark on the suspended engine mounting in relation to the body.

❑ Remove:

- the left-hand suspended engine mounting,
- the right-hand suspended engine mounting.

B84 or C84, and F4R, and 774

❑ Protect the side members.

❑ Remove the « engine - gearbox » assembly from the front.

REFITTING

❑ Position the « engine-gearbox » assembly in the vehicle.

❑ Refit:

- the left-hand suspended engine mounting (see **19D**, **Engine mounting**, **Left-hand suspended engine mounting: Removal - Refitting**, page **19D-12**) ,
- the right-hand suspended engine mounting (see **19D**, **Engine mounting**, **Right-hand suspended engine mounting: Removal - Refitting**, page **19D-20**) ,
- the upper engine tie-bar.
- the lower engine tie-bar.

❑ Remove the **(Mot. 1390)** from the «engine - gearbox » assembly.

❑ Proceed in the reverse order to removal.

❑ Torque tighten:

- the **lower engine tie-bar mounting bolts (on the subframe) (105 Nm)**,
- the **lower engine tie-bar mounting bolts (on the engine) (180 Nm)**,
- the **suspended mounting upper linkage mounting bolts (105 Nm)**,
- the **radiator front cross member mounting bolts (105 Nm)**,
- the **radiator rear cross member mounting bolts (21 Nm)**,
- the **driveshaft nut (280 Nm)**,
- the **front end panel upper mounting bolt (21 Nm)**,
- the **front end panel lower mounting bolt (44 Nm)**,
- the **wheel mounting bolts (130 Nm)**,

❑ Add the brake fluid to the brake fluid reservoir.

❑ Perform the following operations:

- bleed the clutch system.
- top up the gearbox oil if necessary,
- fill and bleed the coolant,
- fill the refrigerant circuit using the **refrigerant charging station**.

IMPORTANT
Depress the brake pedal several times to bring the pistons, brake pads and discs into contact.

WARNING
Correctly attach the brake pipe and the sensor wiring for the anti-lock braking system.

❑ Connect the battery (see **Battery : Removal - Refitting**) (MR 364, 80A, Battery).

❑ It is essential to initialise the discharge bulb system (see **Xenon headlights: Adjustment**) (MR 364, 80C, Discharge bulbs).

❑ Adjust the headlights.

B84 or C84 or G84 or S84, and K9K, and 724

Essential special tooling	
Mot. 1448	Long nose pliers for hose clips.
Ms. 583	Hose clamp pliers.
Mot. 1390	Support for removing/refitting the engine - gearbox assembly.

Essential equipment
refrigerant charging station
safety strap(s)

Tightening torques ▽	
support nut for the left-hand suspended engine mounting on the gearbox	**62 N.m**
earth strap bolt	**8 N.m**
intercooler air outlet pipe clip at the intercooler end	**5.5 N.m**
bolt of the compressor - dehydrator reservoir connecting pipe	**8 N.m**
condenser - compressor connecting pipe bolt	**8 N.m**
evaporator - condenser connecting pipe bolt	**8 N.m**
intercooler air inlet pipe clip	**5.5 N.m**
engine accessories unit bolt	**12 Nm**
clip of the air filter unit air outlet pipe	**5.5 N.m**

IMPORTANT
Wear leaktight gloves (Nitrile type) for this operation.

IMPORTANT
To prevent refrigerant from leaking, never repair a faulty air conditioning circuit component.

Replace all faulty components.

IMPORTANT
To avoid any risk of damaging the systems, apply the safety and cleanliness instructions and operation recommendations before carrying out the repair (see **Air conditioning: Precautions for repair**) (62A, Air conditioning).

WARNING
To prevent impurities from entering the circuit, place protective plugs on all fuel circuit components exposed to the open air.

WARNING
To avoid any corrosion or damage, protect the areas on which fuel is likely to run.

WARNING
Keep the pipe unions away from contaminated areas.

WARNING
To prevent moisture from entering the system, place plugs on the cold loop components which are open to the air.

WARNING
To avoid any leaks, check that the pipe surface is sound before positioning the new seal. The surface must be clean and scratch free.

REMOVAL

I - REMOVAL PREPARATION OPERATION

❑ Position the vehicle on a two-post lift (see **Vehicle: Towing and lifting**) (02A, Lifting equipment).

B84 or C84 or G84 or S84, and K9K, and 724

❑ Remove:

- the engine cover,
- the battery (see **Battery: Removal - Refitting**) (80A, Battery),
- the front wheels (see **Wheel: Removal - Refitting**) (35A, Wheels and tyres),
- the front section of the front wheel arch liners (see **Front wheel arch liner: Removal - Refitting**) (55A, Exterior protection),
- the front bumper (see **Front bumper: Removal - Refitting**) (55A, Exterior protection),
- the engine undertray bolts,
- the engine undertray.

❑ Drain:

- the refrigerant circuit using a **refrigerant charging station** (see **Coolant circuit Draining - Refilling**) (62A, Air conditioning),
- the manual gearbox (see **Manual gearbox oil: Draining - Refilling**) (21A, Manual gearbox).
- the cooling system (see **19A**, **Cooling**, **Cooling circuit: Draining - Refilling**, page **19A-15**) ,
- the engine oil (if necessary) (see **10A**, **Engine and cylinder block assembly**, **Engine oil: Draining - Refilling**, page **10A-43**) .

❑ Remove:

- the front right-hand wheel driveshaft (see **Front right-hand wheel driveshaft: Removal - Refitting**) (29A, Driveshafts),
- the front left-hand wheel driveshaft (see **Front left-hand wheel driveshaft: Removal - Refitting**) (29A, Driveshafts),
- the lower engine tie-bar (see **19D**, **Engine mounting**, **Lower engine tie-bar: Removal - Refitting**, page **19D-36**) .

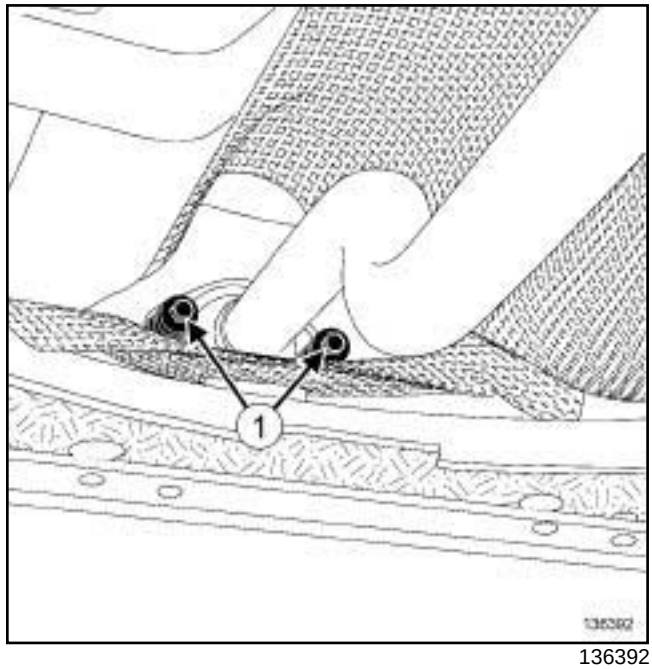

136392

❑ Remove:

- the bolts (**1**) from the exhaust flange,
- the exhaust flange springs.

❑ Move the exhaust pipe away from the catalytic converter.

❑ Remove the seal between the catalytic converter and the exhaust pipe.

❑ Disconnect the oil vapour rebreathing pipe union from the air filter unit air outlet pipe.

B84 or C84 or G84 or S84, and K9K, and 724

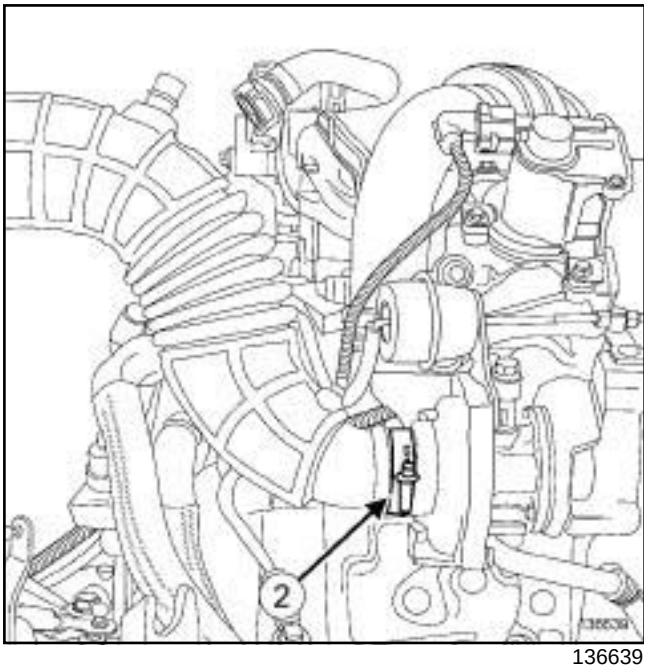

136639

- ❑ Undo the clip (**2**) for the air pipe at the outlet of the air filter box on the turbocharger side.
- ❑ Disconnect the air filter unit air outlet pipe on the turbocharger side.
- ❑ Unclip the turbocharger pressure regulation solenoid valve.
- ❑ Move aside the turbocharger pressure regulating solenoid valve.
- ❑ Remove:
  - the battery tray (see **Battery tray: Removal - Refitting**) (80A, Battery),
  - the air filter unit (see **12A**, **Fuel mixture**, **Air filter unit: Removal - Refitting**, page **12A-11**) ,
  - the air outlet pipe of the air filter unit.

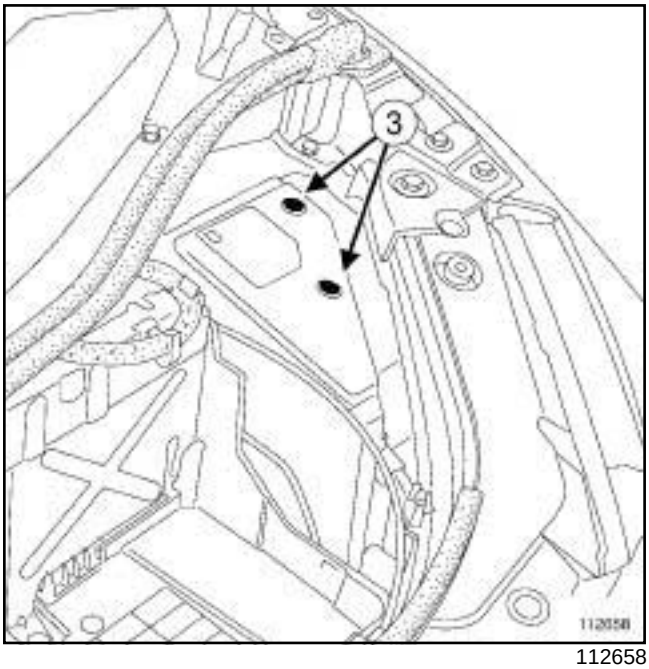

112658

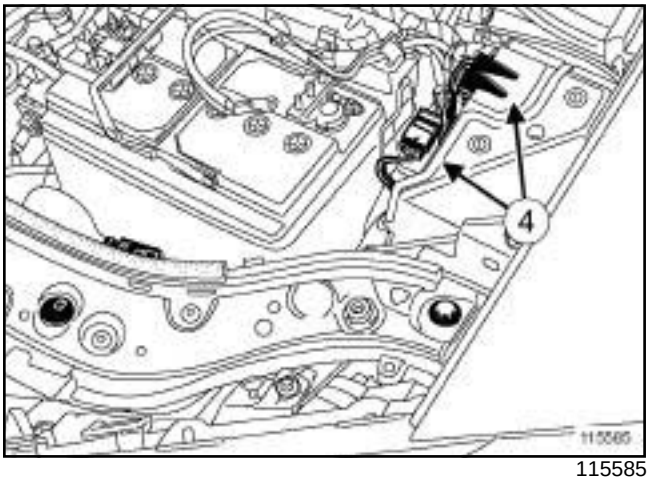

115585

- ❑ Remove:
  - the engine accessories unit cover bolts (**3**) ,
  - the engine accessories unit cover.
- ❑ Disconnect the engine accessories unit front end panel connectors (**4**) .

B84 or C84 or G84 or S84, and K9K, and 724

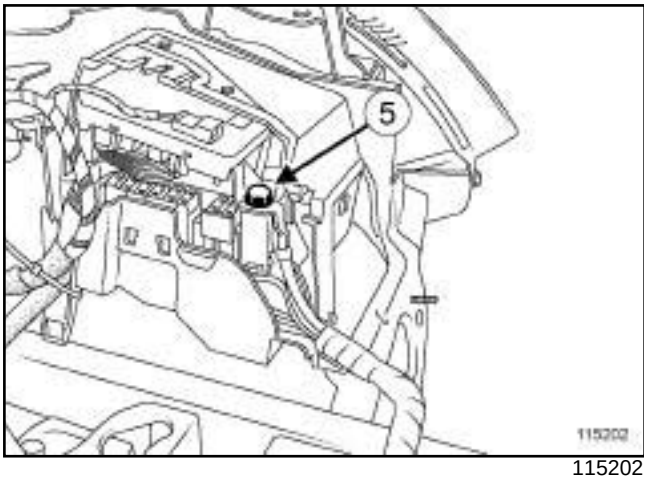

115202

❑ Remove the engine accessories unit bolt (**5**) .

❑ Remove the engine accessories unit.

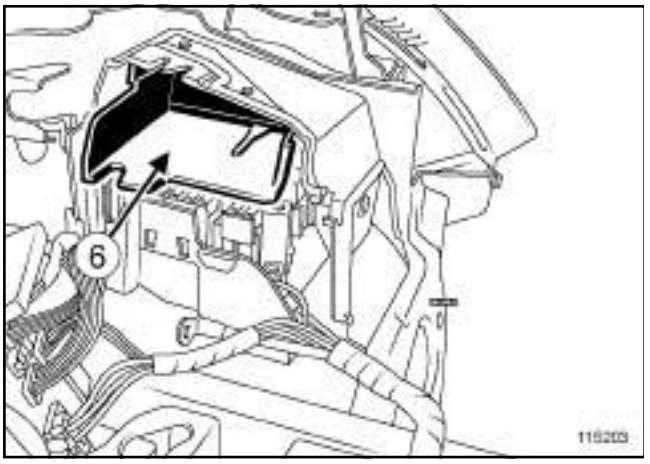

115203

❑ Remove the engine accessories unit support (**6**) .

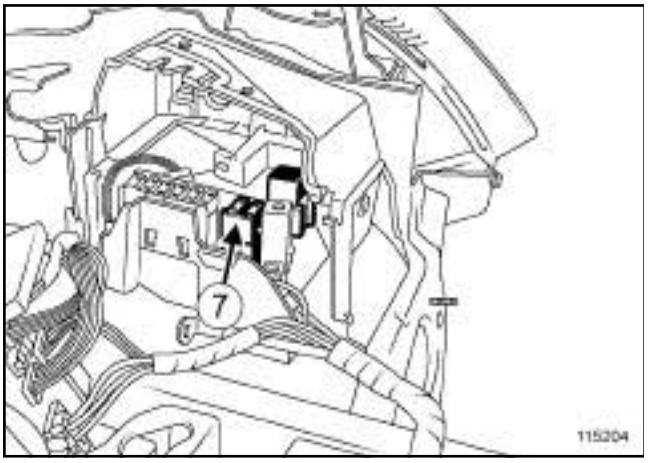

115204

❑ Remove the fuses (**7**) .

❑ Unclip the fuse holder (**7**) .

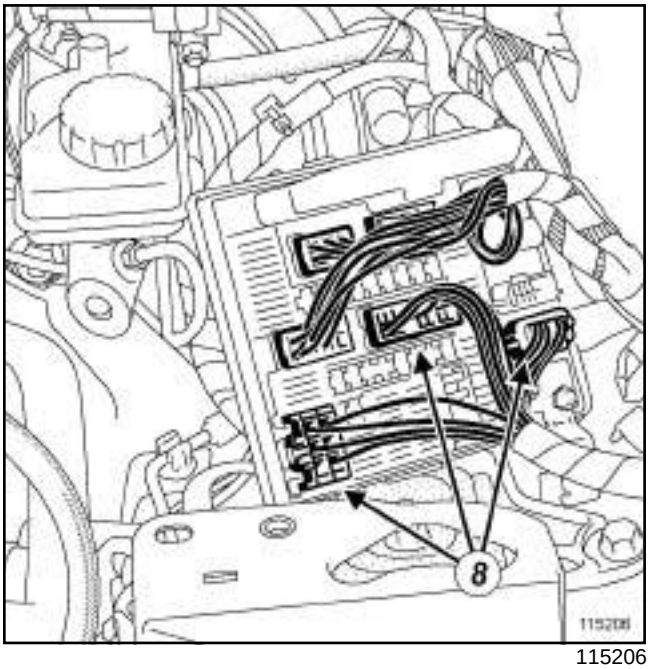

115206

❑ Disconnect the engine connectors (**8**) from the engine accessories unit.

❑ Remove:

- the front impact cross member (see **Front impact cross member: Removal - Refitting**) (41A, Front lower structure),
- the front end panel (see **Front: Removal - Refitting**) (42A, Upper front structure).

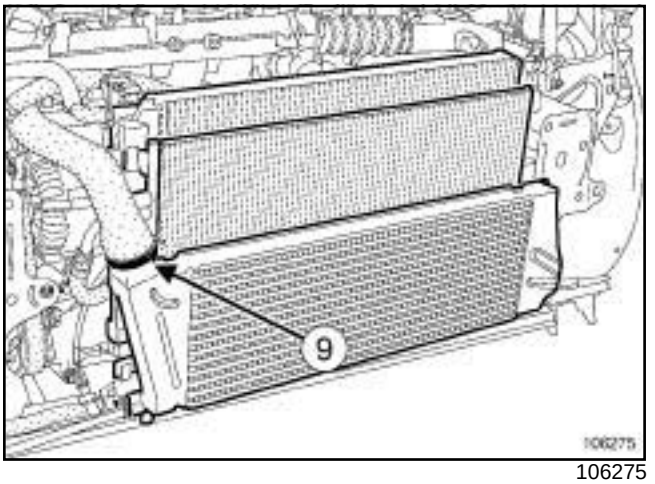

106275

❑ Undo the clip (**9**) for the air-air intercooler air inlet pipe at the air-air intercooler end.

❑ Disconnect the air-air intercooler air inlet pipe at the air-air intercooler end.

B84 or C84 or G84 or S84, and K9K, and 724

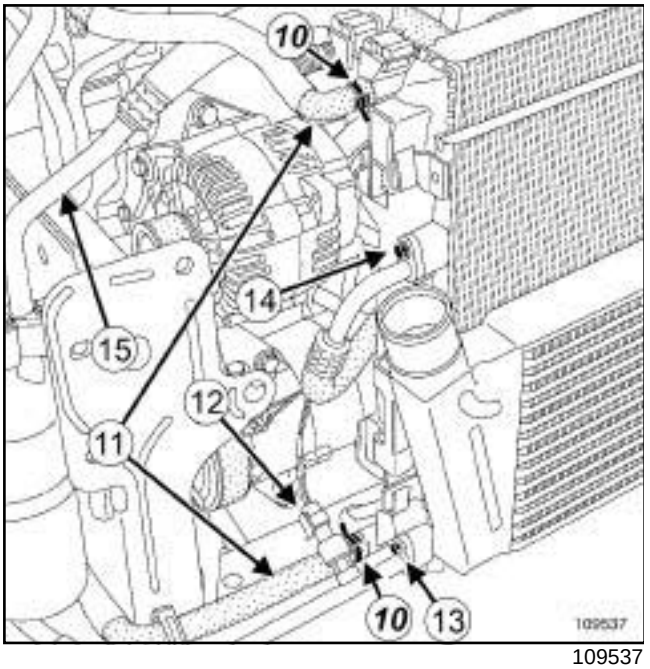

109537

❑ Move aside the clips (**10**) of the cooling hoses between the expansion bottle and the cooling radiator at the cooling radiator end using the **(Mot. 1448)**.

❑ Disconnect:

- the cooling hoses (**11**) between the expansion bottle and the cooling radiator at the cooling radiator end,
- the connector (**12**) from the air conditioning pressure sensor.

❑ Remove:

- the bolt (**13**) from the evaporator-condenser connecting pipe, on the condenser side,
- the bolt (**14**) from the condenser-compressor connection pipe, on the condenser side
- the bolt (**15**) from the compressor-dehydrator reservoir connecting pipe, on the dehydrator reservoir side.

❑ Disconnect:

- the evaporator-condenser connecting hose on the condenser side,
- the condenser-compressor connecting hose on the condenser side,
- the compressor-dehydration canister connecting hose on the dehydration canister side.

WARNING
To prevent moisture from entering the system, place plugs on the cold loop components which are open to the air.

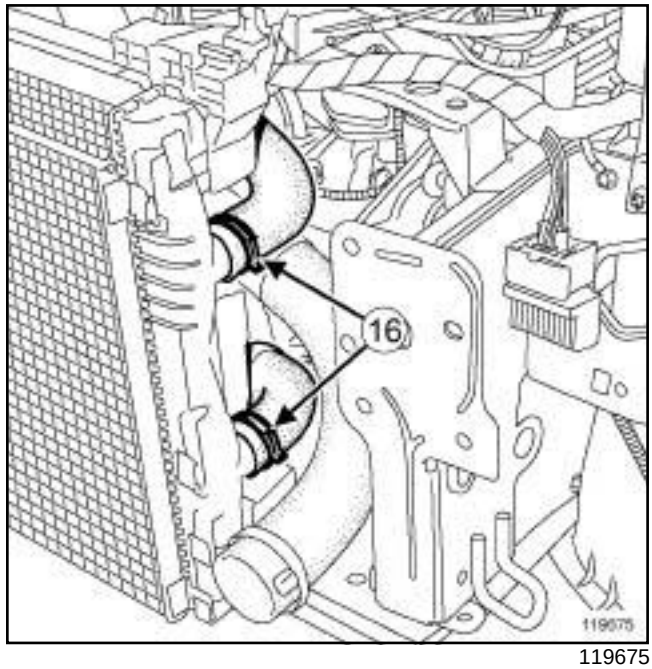

119675

❑ Remove the clips (**16**) from the cooling radiator top hoses using the tool **(Mot. 1448)**.

❑ Disconnect the top hoses from the cooling radiator.

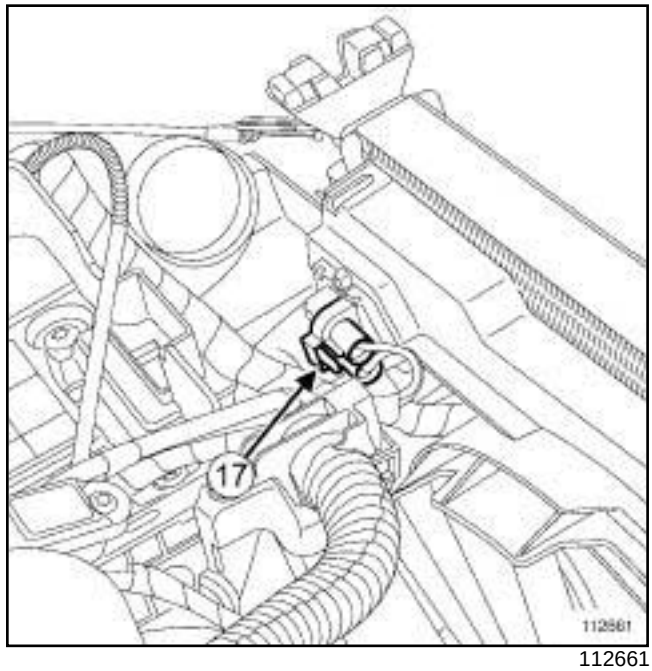

112661

❑ Disconnect:

- the fan assembly resistor connector (**17**) ,
- the motor-driven fan assembly connector.

❑ Unclip the blower unit wiring.

B84 or C84 or G84 or S84, and K9K, and 724

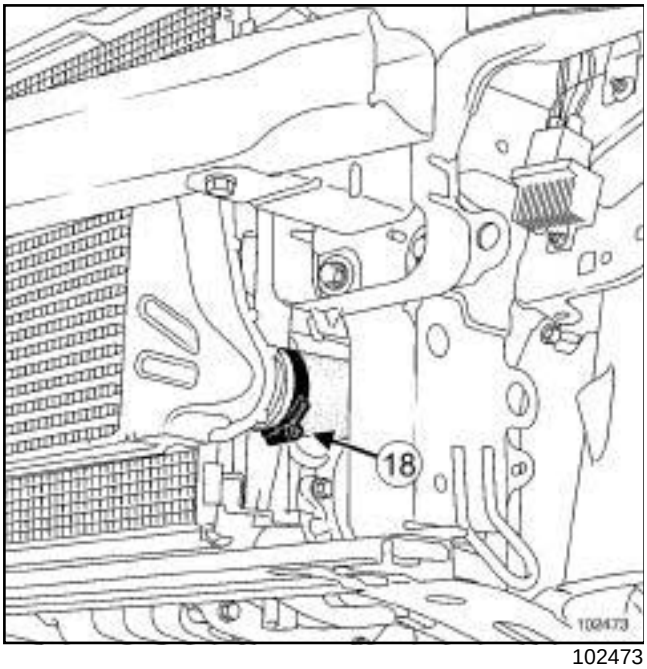

102473

- ❑ Undo the clip (**18**) for the intercooler air outlet pipe at the intercooler end.
- ❑ Disconnect the intercooler air outlet pipe at the intercooler end.
- ❑ Remove the « intercooler - condenser - cooling radiator - engine cooling fan » assembly.

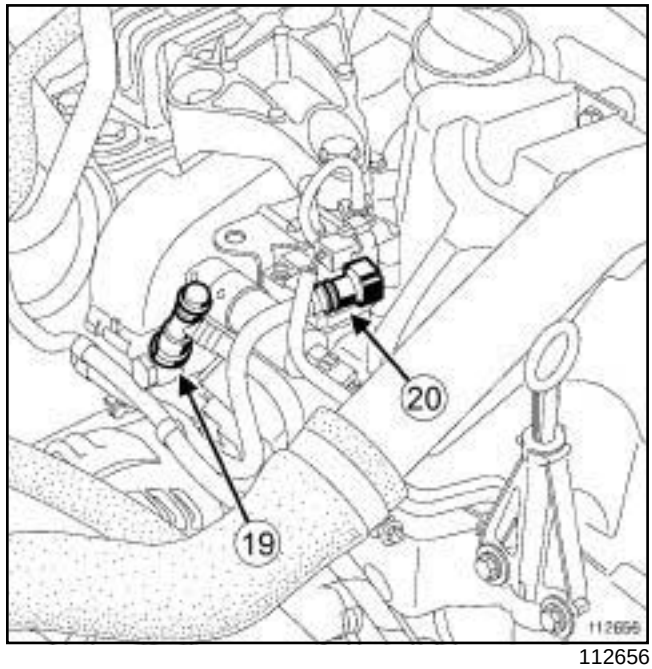

112656

- ❑

WARNING

To avoid any corrosion or damage, protect the areas on which fuel is likely to run.

- ❑ Disconnect:
  - the fuel supply pipe (**19**) ,
  - the fuel return pipe (**20**) .
- ❑ Insert the blanking plugs.

B84 or C84 or G84 or S84, and K9K, and 724

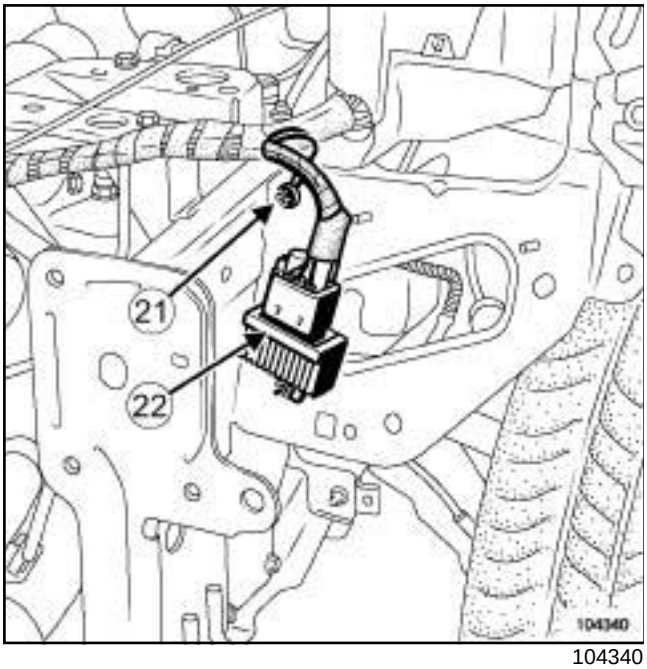

104340

❑ Remove the nut (**21**) from the earth strap.

❑ Disconnect the pre-postheating unit connector (**22**) .

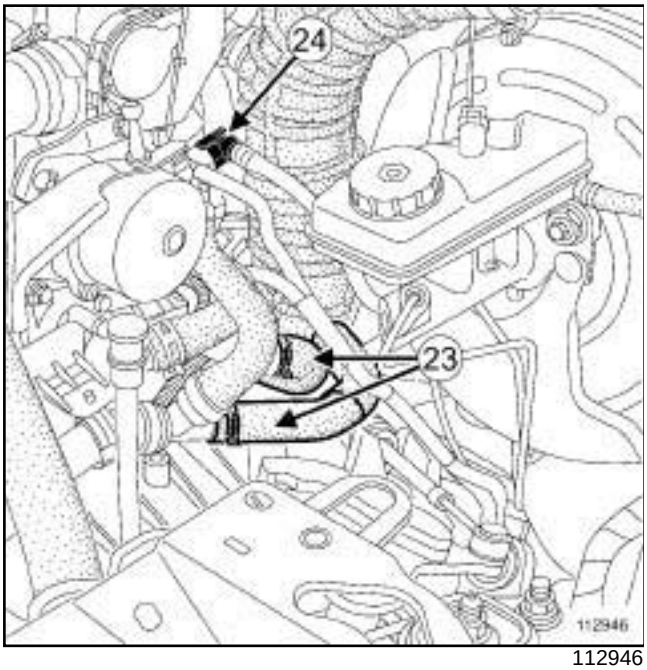

112946

❑ Move aside the heater radiator hose clips (**23**) using the **(Mot. 1448)**.

❑ Disconnect:

- the heater radiator hoses,
- the vacuum pump brake servo pipe union (**24**) .

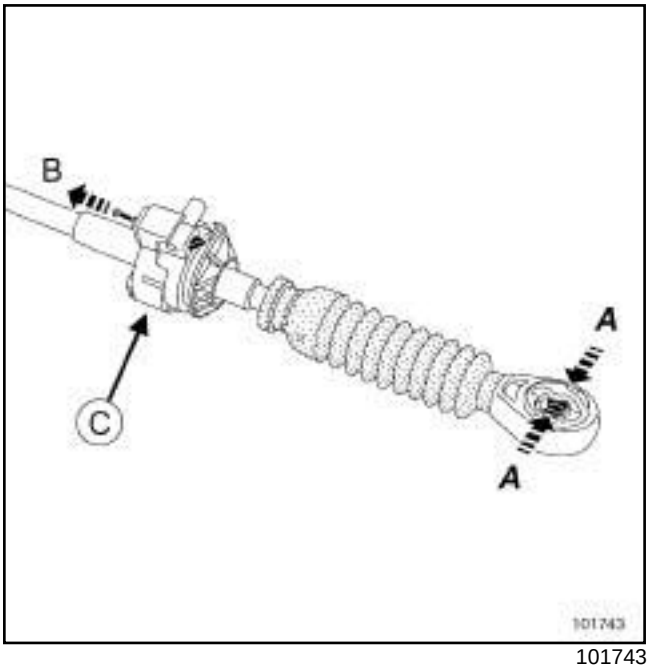

101743

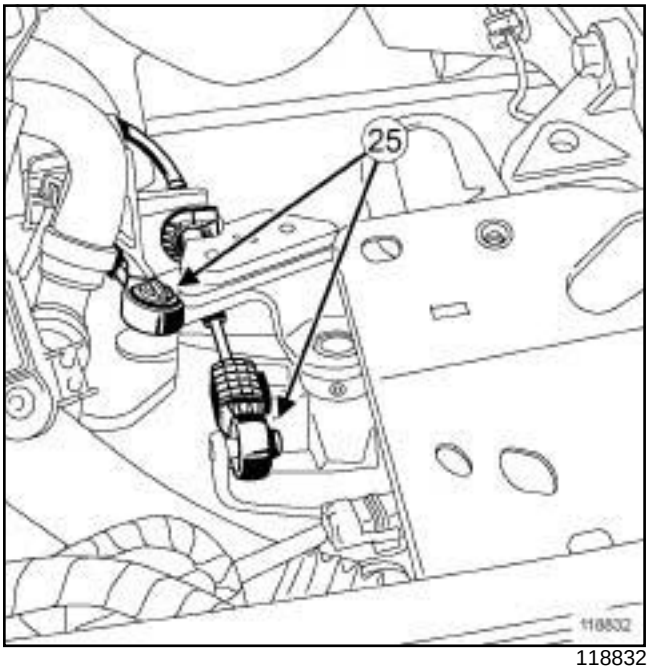

118832

❑ Unclip the gearbox controls (**25**) by:

- pinching the gearbox control at (**A**) ,
- pulling the pin at (**B**) ,
- lifting the gearbox control at (**C**) .

B84 or C84 or G84 or S84, and K9K, and 724

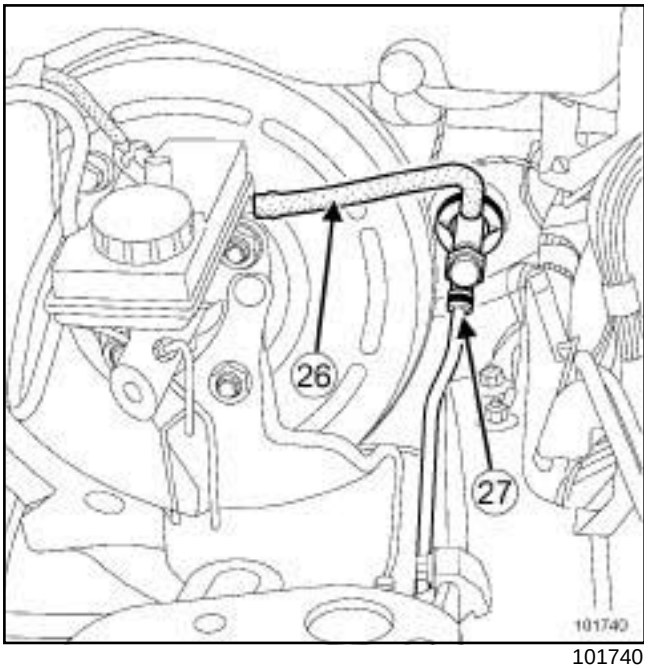

101740

- ❑ Fit the **(Ms. 583)** onto the clutch master cylinder supply pipe (**26**) .
- ❑ Pull the clip (**27**) from the clutch master cylinder supply pipe.
- ❑ Disconnect the clutch hydraulic control pipe.
- ❑ Remove the radiator mounting cross member (see **Radiator support cross member: Removal - Refitting**) (41A, Front lower structure).

II - OPERATION FOR REMOVAL OF PART CONCERNED

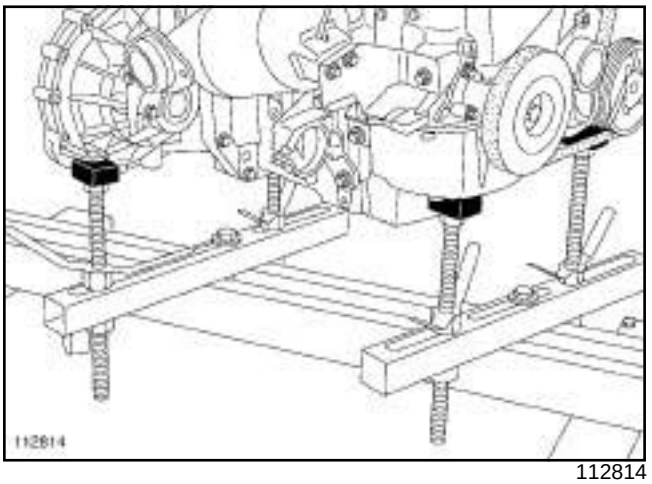

112814

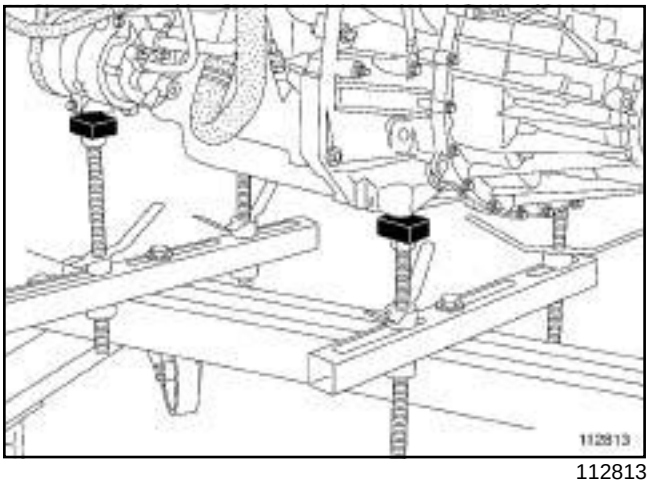

112813

- ❑ Position the **(Mot. 1390)**.
- ❑ Remove the right-hand suspended engine mounting (see **19D**, **Engine mounting**, **Right-hand suspended engine mounting: Removal - Refitting**, page **19D-20**) .

B84 or C84 or G84 or S84, and K9K, and 724

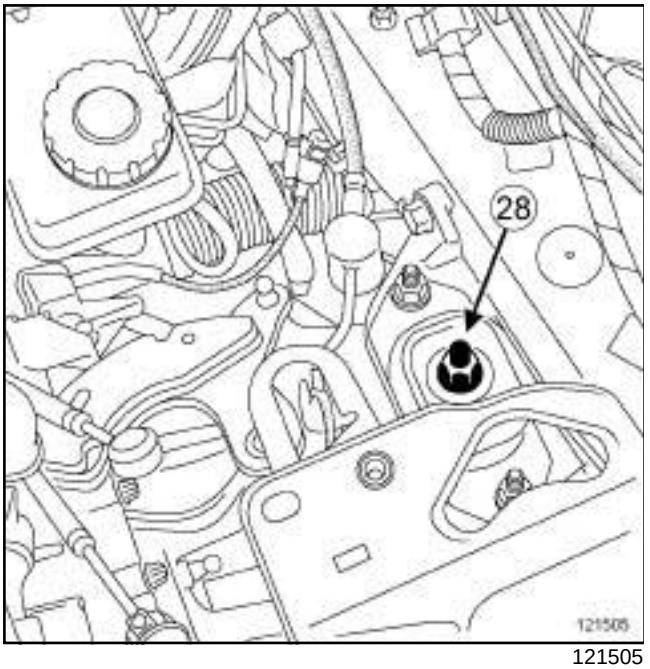

121505

- ❑ Remove the left-hand suspended engine mounting nut (**28**) .
- ❑ Strap the « engine - gearbox » assembly to the tool **(Mot. 1390)** using a **safety strap(s)**.
- ❑ Remove the « engine and gearbox » assembly.

REFITTING

I - REFITTING PREPARATION OPERATION

- ❑ **parts always to be replaced: seal between catalytic converter and exhaust downpipe hose (10, 08,02,21)**.

II - OPERATION FOR REFITTING PART CONCERNED

- ❑ Position the « engine - gearbox » assembly in the engine compartment.
- ❑ Remove the **safety strap(s)**.
- ❑ Torque tighten the **support nut for the left-hand suspended engine mounting on the gearbox (62 N.m)**.
- ❑ Refit the right-hand suspended engine mounting (see **19D**, **Engine mounting**, **Right-hand suspended engine mounting: Removal - Refitting**, page **19D-20**) .
- ❑ Remove the tool **(Mot. 1390)**.

III - FINAL OPERATION

- ❑ Refit the radiator mounting cross member (see **Radiator support cross member: Removal - Refitting**) (41A, Front lower structure).
- ❑ Connect the hydraulic clutch control pipe.
- ❑ Push the clutch master cylinder supply pipe clip.
- ❑ Remove the tool **(Ms. 583)** from the clutch master cylinder supply pipe.
- ❑ Clip the gearbox controls into place.
- ❑ Connect:
  - the vacuum pump brake servo pipe union,
  - the heater radiator hoses.
- ❑ Fit the heater radiator hose clips using the tool **(Mot. 1448)**.
- ❑ Connect the pre-postheating unit connector.
- ❑ Position the earth strap.
- ❑ Torque tighten the **earth strap bolt (8 N.m)**.
- ❑ Remove the blanking plugs.
- ❑ Connect:
  - the fuel return pipe,
  - the fuel inlet pipe.
- ❑ Refit the « intercooler - condenser - cooling radiator - engine cooling fan » assembly.
- ❑ Connect the intercooler air outlet pipe at the intercooler end.
- ❑ Torque tighten the **intercooler air outlet pipe clip at the intercooler end (5.5 N.m)**.
- ❑ Clip the fan assembly wiring.
- ❑ Connect:
  - the fan assembly connector,
  - the fan assembly resistor connector,
  - the cooling radiator top hoses.
- ❑ Fit the cooling radiator top hose clips using the tool **(Mot. 1448)**.
- ❑ Connect:
  - the compressor-dehydration canister connecting hose on the dehydration canister side,
  - the condenser-compressor connecting hose on the condenser side,
  - the evaporator-condenser connecting hose on the condenser side.

B84 or C84 or G84 or S84, and K9K, and 724

❏ Torque tighten:

- the **bolt of the compressor - dehydrator reservoir connecting pipe (8 N.m)**,
- the **condenser - compressor connecting pipe bolt (8 N.m)**,
- the **evaporator - condenser connecting pipe bolt (8 N.m)**.

❏ Connect:

- the connector of the air conditioning pressure sensor,
- the cooling hoses between the expansion bottle and the cooling radiator at the cooling radiator end.

❏ Fit the cooling hose clip between the expansion bottle and the cooling radiator at the cooling radiator end using the **(Mot. 1448)**.

❏ Connect the intercooler air inlet pipe on the intercooler side.

❏ Torque tighten the **intercooler air inlet pipe clip (5.5 N.m)**.

❏ Refit:

- the front end panel (see **Front: Removal - Refitting**) (42A, Upper front structure),
- the front impact cross member (see **Front impact cross member: Removal - Refitting**) (41A, Front lower structure).

❏ Connect the engine accessories unit engine connectors.

❏ Clip on the fuse holder.

❏ Refit:

- the fuses,
- the engine accessories unit mounting.

❏ Fit the engine accessories unit.

❏ Torque tighten the **engine accessories unit bolt (12 Nm)**.

❏ Connect the engine accessories unit front end panel connectors.

❏ Refit:

- the engine accessories unit cover,
- the air outlet pipe of the air filter unit,
- the air filter unit (see **12A**, **Fuel mixture**, **Air filter unit: Removal - Refitting**, page **12A-11**) ,
- the battery tray (see **Battery tray: Removal - Refitting**) (80A, Battery).

❏ Position the turbocharger pressure regulating solenoid valve.

❏ Clip the turbocharger pressure regulating solenoid valve.

❏ Connect the air filter unit air outlet pipe to the turbocharger.

❏ Torque tighten the **clip of the air filter unit air outlet pipe (5.5 N.m)**.

❏ Connect the oil vapour rebreathing pipe union to the air filter unit air outlet pipe.

❏ Fit the exhaust pipe.

❏ Refit:

- a new seal between the catalytic converter and the exhaust downpipe hose,
- the exhaust flange springs,
- the exhaust flange bolts.

❏ Refit:

- the lower engine tie-bar (see **19D**, **Engine mounting**, **Lower engine tie-bar: Removal - Refitting**, page **19D-36**) ,
- the front left-hand wheel driveshaft (see **Front left-hand wheel driveshaft: Removal - Refitting**) (29A, Driveshafts),
- the front right-hand wheel driveshaft (see **Front right-hand wheel driveshaft: Removal - Refitting**) (29A, Driveshafts).

❏ Perform the following operations:

- bleed the clutch circuit (see **Clutch circuit: Bleeding**) (37A, Mechanical component controls),
- fill the gearbox (see **Manual gearbox oil: Draining - Refilling**) (21A, Manual gearbox).
- top up the engine oil (if necessary) (see **10A**, **Engine and cylinder block assembly**, **Engine oil: Draining - Refilling**, page **10A-43**) ,
- fill and bleed the cooling circuit (see **19A**, **Cooling**, **Cooling circuit: Draining - Refilling**, page **19A-15**) ,
- fill the refrigerant circuit using the **refrigerant charging station** (see **Coolant circuit Draining - Refilling**) (62A, Air conditioning).

❏ Refit:

- the engine undertray,
- the front bumper (see **Front bumper: Removal - Refitting**) (55A, Exterior protection),
- the front section of the front wheel arch liners (see **Front wheel arch liner: Removal - Refitting**) (55A, Exterior protection),

B84 or C84 or G84 or S84, and K9K, and 724

- the front wheels (see **Wheel: Removal - Refitting**) (35A, Wheels and tyres),
- the battery (see **Battery: Removal - Refitting**) (80A, Battery),
- the engine cover.

B84 or C84 or G84 or S84, and M9R, and 700

Tightening torques ▽	
engine speed and position sensor mounting bolt	**10 Nm**

REMOVAL

I - REMOVAL PREPARATION OPERATION

❑ Remove the engine undertray.

❑ Move the heat insulating material to one side.

II - REMOVAL OPERATION FOR PART CONCERNED

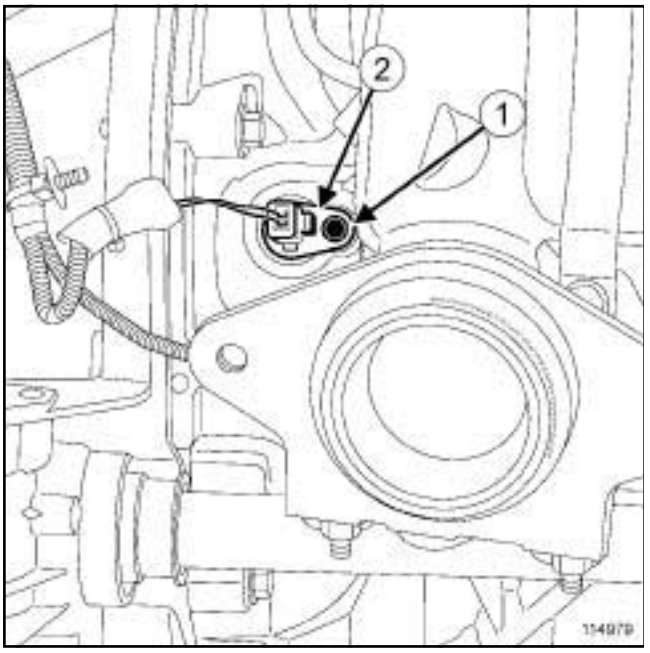

114979

❑ Disconnect the engine speed and position sensor.

❑ Remove:

- the engine speed and position sensor mounting bolt (**1**) ,
- the engine speed and position sensor (**2**) .

III - REFITTING OPERATION FOR PART CONCERNED

❑ Refit the engine speed and position sensor.

❑ Tighten the engine speed and position sensor mounting bolt until contact is made.

❑ Tighten to torque the **engine speed and position sensor mounting bolt (10 Nm)**.

❑ Connect the engine speed and position sensor connector.

IV - FINAL OPERATION.

❑ Refit:

- the heat insulating material around the engine speed and position sensor,
- the engine undertray.

B84 or C84 or E84 or G84 or K84 or S84, and F9Q or K4J or K4M or K9K – F4R, and 770 or 771 or 776

Essential special tooling	
Mot. 582-01	Flywheel locking tool.
Mot. 1677	Flywheel locking tool.

Tightening torques ▽	
flywheel mounting bolts (K engines)	**6.5 daNm**
flywheel mounting bolts (F4R engine)	**7 daNm**
flywheel mounting bolts (F9Q engine)	**9 daNm**

REMOVAL

❑ Remove:

- the gearbox (see **Manual gearbox: Removal - Refitting**) ,
- the clutch pressure plate (see **Mechanism / Disk: Removal - Refitting**) .

K4J or K4M or K9K

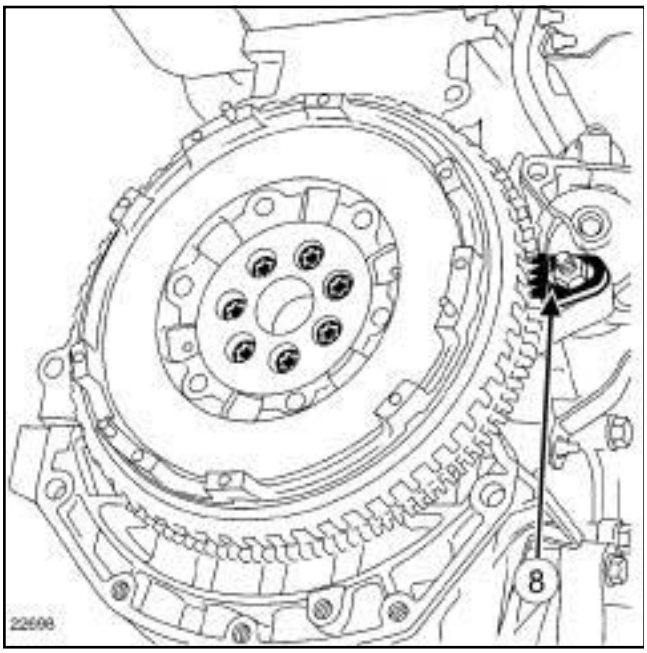

22698

❑ Position the **(Mot. 582-01)** (**8**) .

❑ Remove:

- the flywheel mounting bolts,
- the flywheel,
- the **(Mot. 582-01)** (**8**) .

F9Q

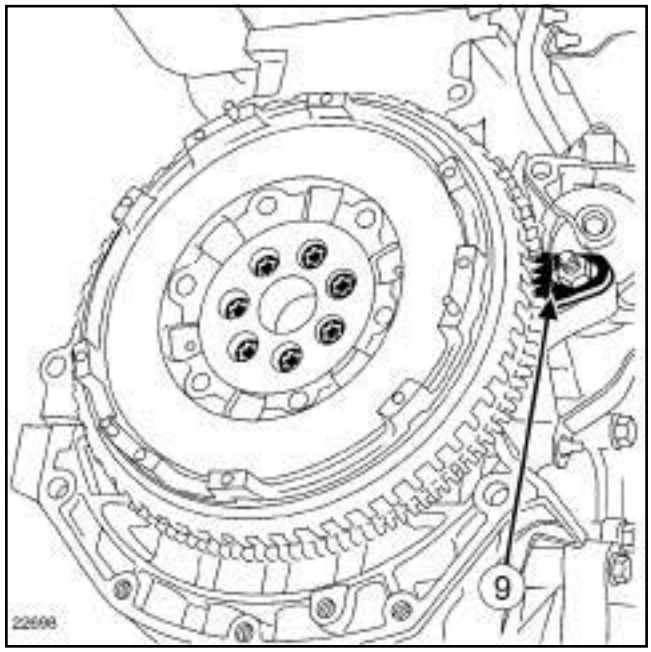

22698

❑ Fit the **(Mot. 1677)** (**9**) .

❑ Remove:

- the flywheel mounting bolts,
- the flywheel,
- the **(Mot. 1677)** (**9**) .

Note:
The engine flywheel is of the dual-mass type.

REFITTING

❑ Clean the threading of the flywheel mounting bolts on the crankshaft.

❑ Degrease the pressure face of the flywheel on the crankshaft.

❑ Check the condition of the flywheel.

B84 or C84 or E84 or G84 or K84 or S84, and F9Q or K4J or K4M or K9K – F4R, and 770 or 771 or 776

K9K

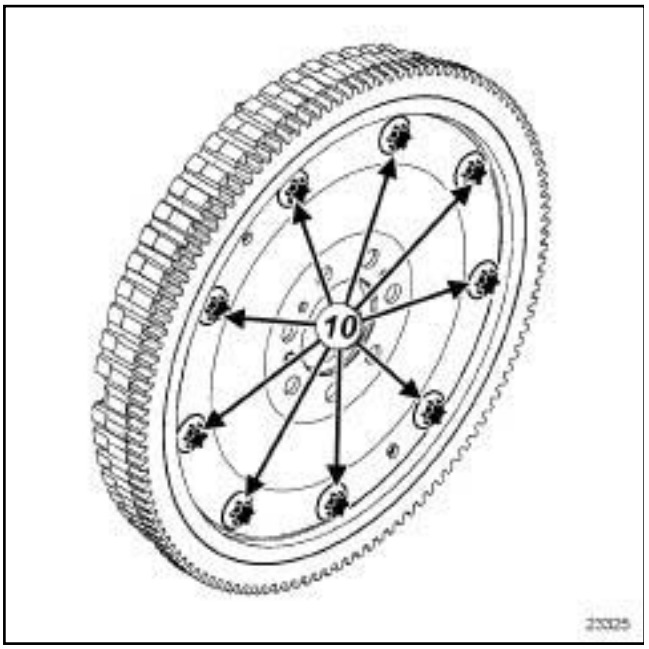

23325

❑

WARNING
Do not remove the flywheel drive plate mounting bolts (**10**) .

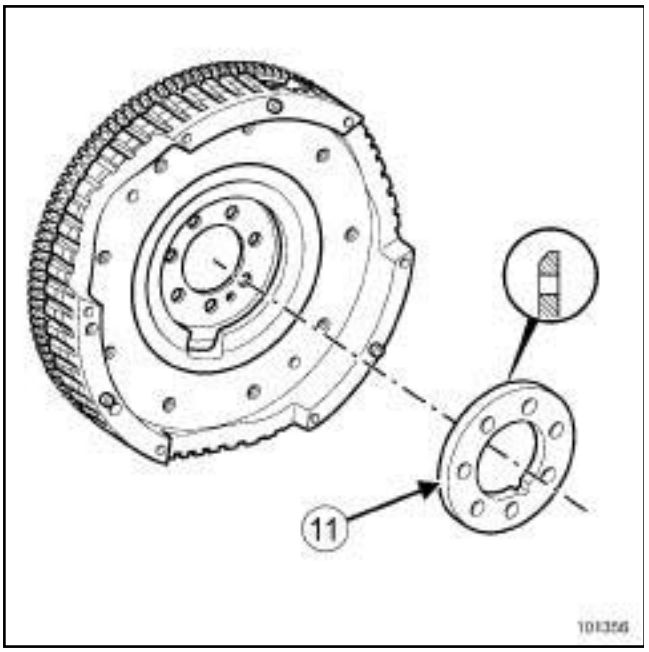

101356

❑ Refit the spacer (**11**) observing the fitting direction of the chamfer on the flywheel end.

❑ Always replace the mounting bolts with new ones.

❑ Coat the new flywheel bolts with **LOCTITE FRENETANCH.**

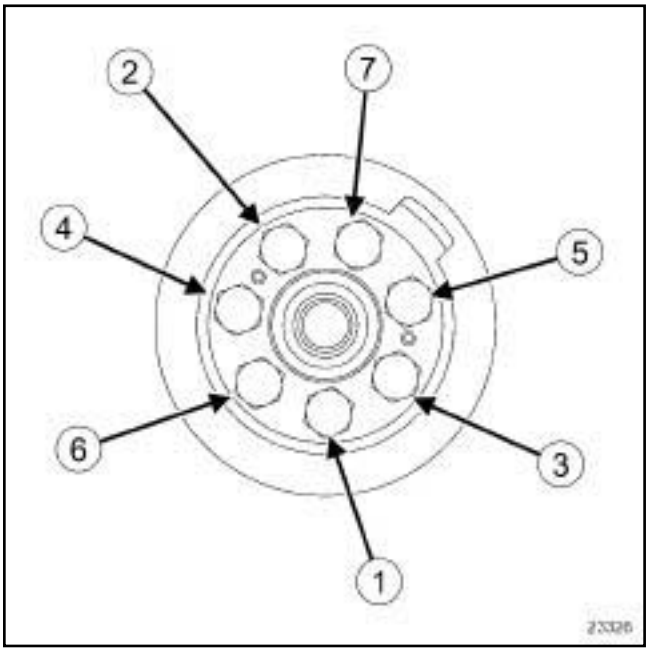

23326

❑ Torque tighten and in order:

- the **flywheel mounting bolts (K engines) (6.5 daNm)**,
- the **flywheel mounting bolts (F4R engine) (7 daNm)**,
- the **flywheel mounting bolts (F9Q engine) (9 daNm)**.

M9R, and 700

Essential special tooling	
Mot. 1431	Flywheel locking tool.

Tightening torques ▽	
flywheel mounting bolts	**25 Nm + 45° ± 6**

REMOVAL

I - REMOVAL PREPARATION OPERATION

❑ Remove:

- the « engine - gearbox » assembly (see **10A**, **Engine and cylinder block assembly**, **Engine/gearbox assembly: Removal - Refitting**, page **10A-97**) (MR 364, 10A, Engine and peripherals),
- the gearbox (see **Manual gearbox: Removal - Refitting**) ,
- the pressure plate and the disc (see **Mechanism / Disk: Removal - Refitting**) .

II - OPERATION FOR REMOVAL OF PART CONCERNED

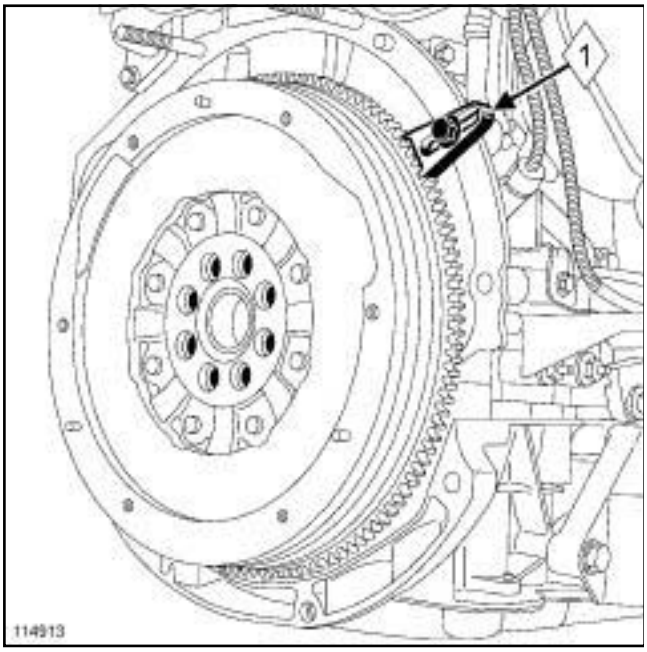

114913

❑ Position the **(Mot. 1431)** (**1**) .

❑ Remove:

- the flywheel mounting bolts,
- the flywheel,
- the **(Mot. 1431)**.

> Note:
> The engine flywheel is of the dual-mass type.

REFITTING

I - REFITTING PREPARATIONS OPERATION

❑ Clean the threading of the flywheel mounting bolts on the crankshaft.

❑ Degrease the pressure face of the flywheel on the crankshaft.

❑ Check the condition of the flywheel.

❑ Always replace the mounting bolts with new ones.

II - REFITTING OPERATION FOR PART CONCERNED

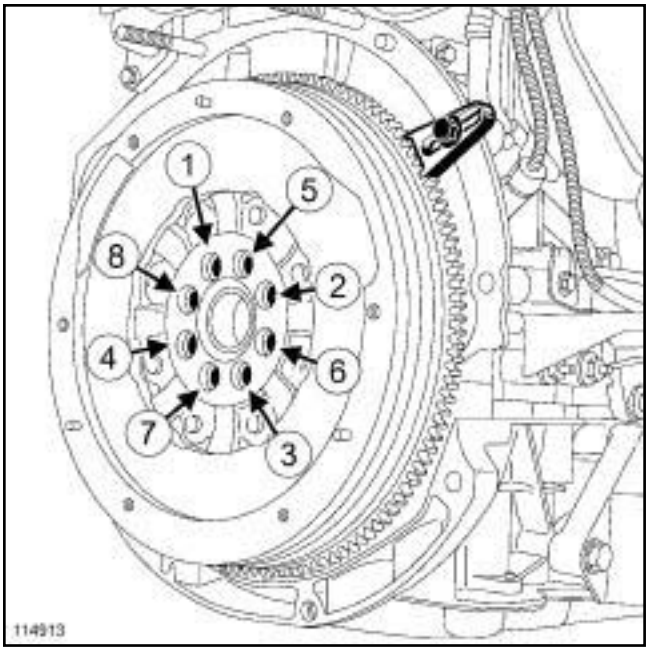

114913

❑ Refit the flywheel.

❑ Coat the new flywheel bolts with **LOCTITE FRENETANCH**.

❑ Tighten the new mounting bolts until contact is made.

❑ Fit the **(Mot. 1431)**.

M9R, and 700

- Tighten to torque and in order the **flywheel mounting bolts (25 Nm + 45° ± 6)**.

III - FINAL OPERATION

- Remove tool **(Mot. 1431)**.
- Refit:
  - the disc and the pressure plate (see **Mechanism / Disk: Removal - Refitting**) ,
  - the gearbox (see **Manual gearbox: Removal - Refitting**) ,
  - the « engine - gearbox » assembly (see **10A**, **Engine and cylinder block assembly**, **Engine/gearbox assembly: Removal - Refitting**, page **10A-97**) (MR 364, 10A, Engine and peripherals).

B84 or C84, and F4R, and 774

Essential special tooling	
Mot. 1677	Flywheel locking tool.

Tightening torques ▽	
flywheel mounting bolts	**70 Nm**

REMOVAL

❑ Remove:

- the gearbox (see **Manual gearbox: Removal - Refitting**) ,
- the clutch pressure plate (see **Mechanism / Disk: Removal - Refitting**) .

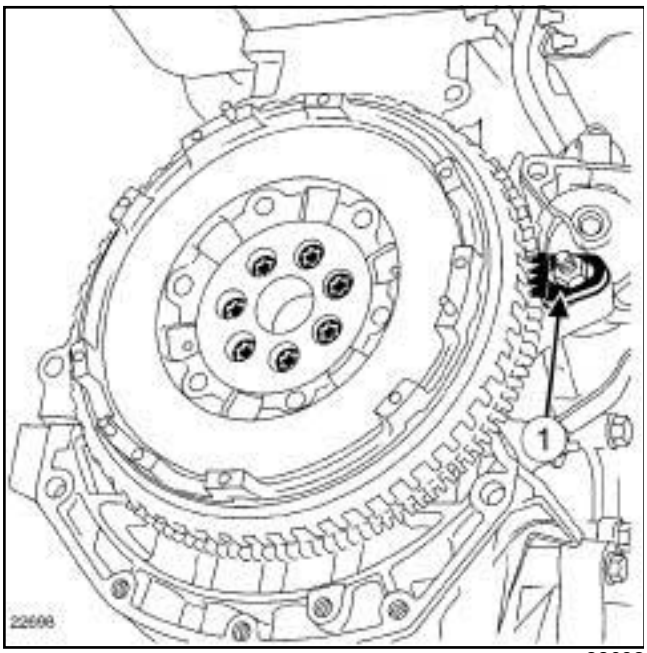

22698

❑ Set up the **(Mot. 1677)** (**1**) .

❑ Remove:

- the flywheel mounting bolts,
- the flywheel,
- tool **(Mot. 1677)** (**1**) .

Note:

The engine flywheel is of the dual-mass type.

REFITTING

❑ Clean the threading of the flywheel mounting bolts on the crankshaft.

❑ Degrease the pressure face of the flywheel on the crankshaft.

❑ Check the condition of the flywheel.

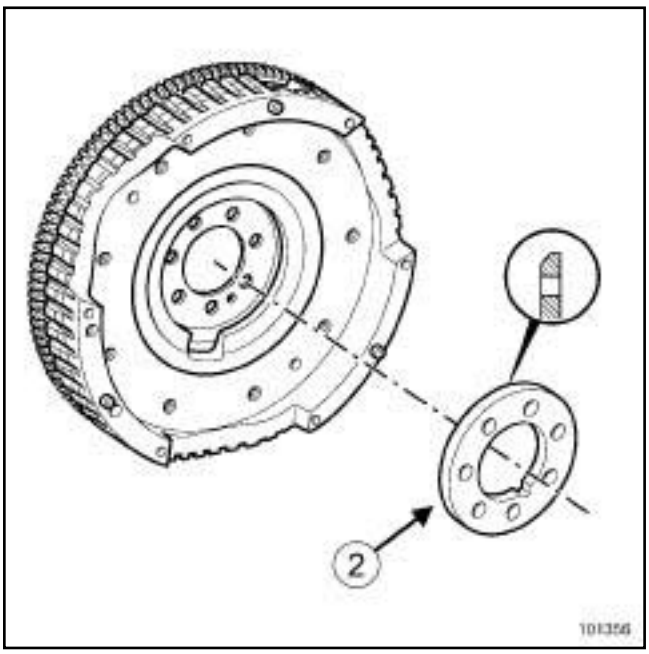

101356

❑ Refit the spacer (**2**) observing the fitting direction of the chamfer on the flywheel end.

❑ Always replace the mounting bolts with new ones.

❑ Coat the new flywheel bolts with **LOCTITE FRENETANCH**.

WARNING

When replacing an engine following over-revving, always replace the flywheel.

B84 or C84, and F4R, and 774

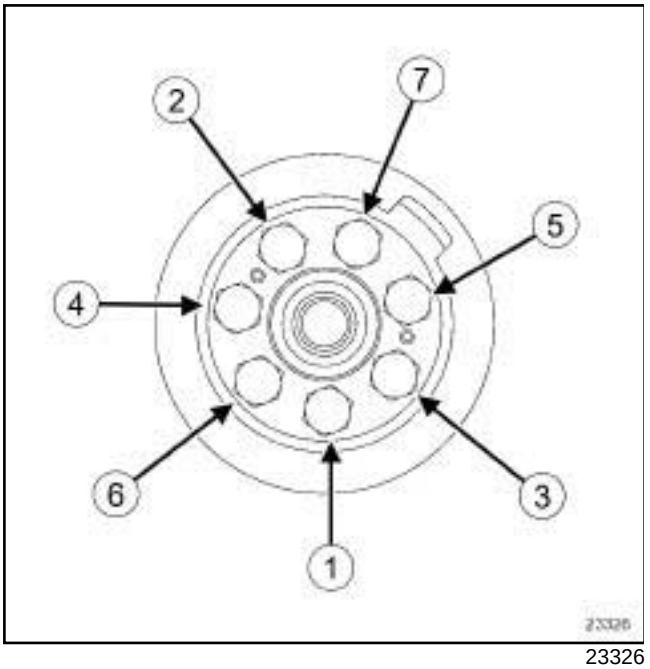

23326

❑ Tighten to torque and in order the **flywheel mounting bolts (70 Nm)**.

L84, and K4M, and 812

Essential special tooling	
Mot. 582-01	Flywheel locking tool.

Tightening torques ▽	
flywheel bolts	**70 Nm**

REMOVAL

I - REMOVAL PREPARATION OPERATION

❑ Position the vehicle on a two-post lift (see **Vehicle: Towing and lifting**) (02A, Lifting equipment).

❑ Remove:

- the battery (see **Battery: Removal - Refitting**) (80A, Battery)
- the battery tray (see **Battery tray: Removal - Refitting**) (80A, Battery),
- the injection computer (see **17B**, **Petrol injection**, **Petrol injection computer: Removal - Refitting**, page **17B-30**) ,
- the front wheels (see **Wheel: Removal - Refitting**) (35A, Wheels and tyres),
- the front wheel arch liners (see **Front wheel arch liner: Removal - Refitting**) (55A, Exterior protection).

❑ Drain the manual gearbox (see **10A**, **Engine and cylinder block assembly**, **Engine oil: Draining - Refilling**, page **10A-43**) (21A, Manual gearbox).

❑ Remove:

- the front right-hand driveshaft (see **Front right-hand wheel driveshaft: Removal - Refitting**) (29A, Driveshafts),
- the front left-hand driveshaft (see **Front left-hand wheel driveshaft: Removal - Refitting**) (29A, Driveshafts),
- the starter (see **16A**, **Starting - Charging**, **Starter: Removal - Refitting**, page **16A-21**) ,
- the rear suspended engine mounting (see **19D**, **Engine mounting**, **Lower engine tie-bar: Removal - Refitting**, page **19D-36**) ,
- the right-hand suspended engine mounting (see **19D**, **Engine mounting**, **Right-hand suspended engine mounting: Removal - Refitting**, page **19D-20**) ,
- the manual gearbox (see **Manual gearbox: Removal - Refitting**) (21A, Manual gearbox),
- the clutch pressure plate (see **Mechanism / Disk: Removal - Refitting**) (20A, Clutch).

II - OPERATION FOR REMOVAL OF PART CONCERNED

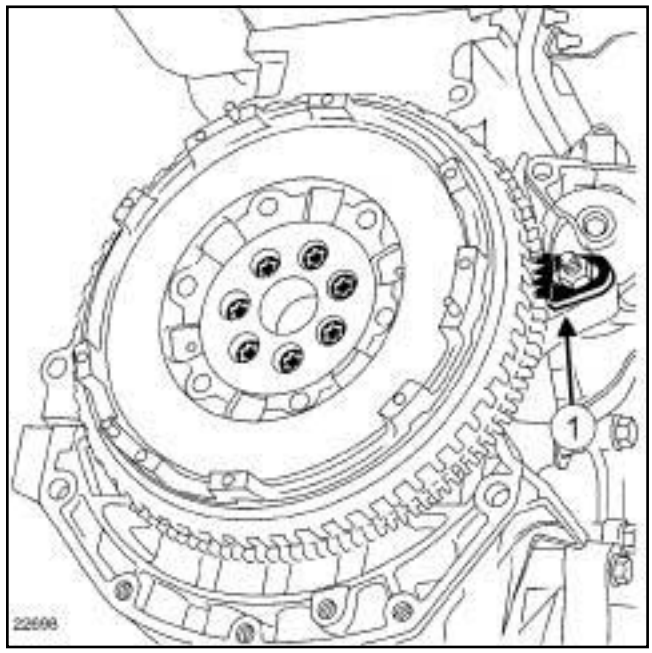

22698

❑ Position the **(Mot. 582-01)**.

❑ Remove:

- the flywheel bolts,
- the flywheel,
- the **(Mot. 582-01)** (**1**) .

REFITTING

I - REFITTING PREPARATION OPERATION

❑ On the crankshaft, clean the flywheel bolt threading.

❑ Degrease the bearing face of the flywheel on the crankshaft.

❑ Check the condition of the flywheel.

❑ Always replace the bolts of the flywheel.

L84, and K4M, and 812

II - REFITTING OPERATION FOR PART CONCERNED

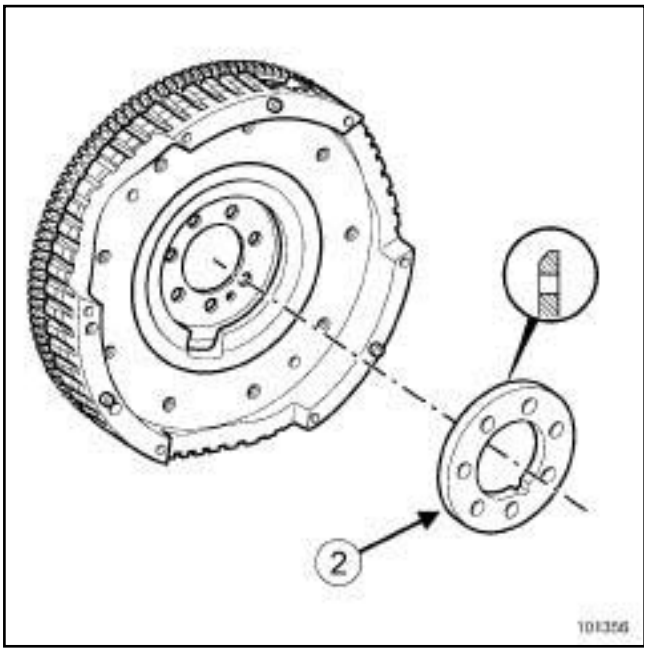

101356

❑ Refit:

- the flywheel,
- the spacer (**2**) observing the fitting direction of the chamfer on the flywheel end.

❑ Coat new bolts of the flywheel with **FRENETANCHE** (see **Vehicle: Parts and ingredients for the repairwork**) (04B, Consumables - Products).

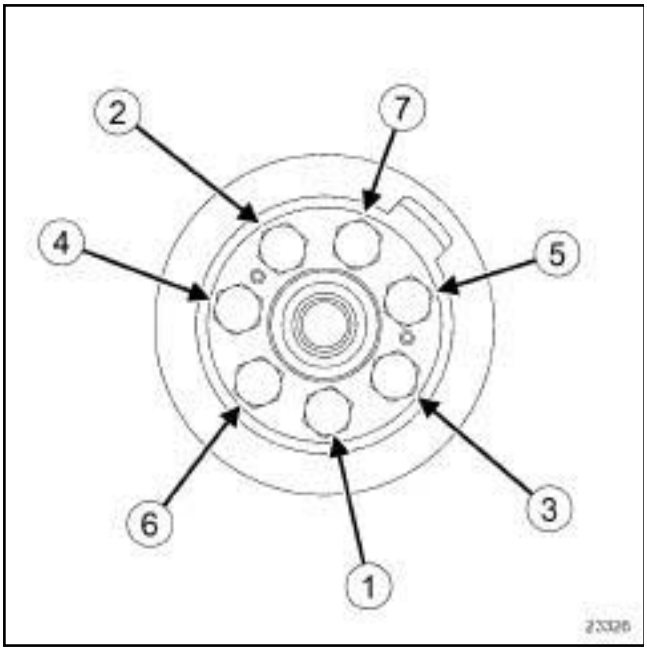

23326

❑ Tighten to torque and in order the **flywheel bolts (70 Nm)**.

III - FINAL OPERATION.

❑ Refit:

- the clutch pressure plate (see **Mechanism / Disk: Removal - Refitting**) (20A, Clutch),
- the manual gearbox (see **Manual gearbox: Removal - Refitting**) (21A, Manual gearbox),
- the right-hand suspended engine mounting (see **19D**, **Engine mounting**, **Right-hand suspended engine mounting: Removal - Refitting**, page **19D-20**) ,
- the rear suspended engine mounting (see **19D**, **Engine mounting**, **Lower engine tie-bar: Removal - Refitting**, page **19D-36**) ,
- the starter (see **16A**, **Starting - Charging**, **Starter: Removal - Refitting**, page **16A-21**) ,
- the front left-hand driveshaft (see **Front left-hand wheel driveshaft: Removal - Refitting**) (29A, Driveshafts),
- the front right-hand driveshaft (see **Front right-hand wheel driveshaft: Removal - Refitting**) (29A, Driveshafts).

❑ Fill the manual gearbox (see **10A**, **Engine and cylinder block assembly**, **Engine oil: Draining - Refilling**, page **10A-43**) (21A, Manual gearbox).

❑ Refit:

- the front wheel arch liners (see **Front wheel arch liner: Removal - Refitting**) (55A, Exterior protection),
- the front wheels (see **Wheel: Removal - Refitting**) (35A, Wheels and tyres),
- the injection computer (see **17B**, **Petrol injection**, **Petrol injection computer: Removal - Refitting**, page **17B-30**) ,
- the battery tray (see **Battery tray: Removal - Refitting**) (80A, Battery),
- the battery (see **Battery: Removal - Refitting**) (80A, Battery).

F4R or K4M, and DP0

Essential special tooling	
Mot. 1677	Flywheel locking tool.
Mot. 582-01	Flywheel locking tool.

Essential equipment
diagnostic tool

Tightening torques ▽	
drive plate bolts (F4R engine)	**4.5 daNm + 50° ± 5**
drive plate bolts (K4M engine)	**5.5 daNm + 50° ± 5**

This operation can be performed after the automatic gearbox has been removed.

REMOVAL

F4R

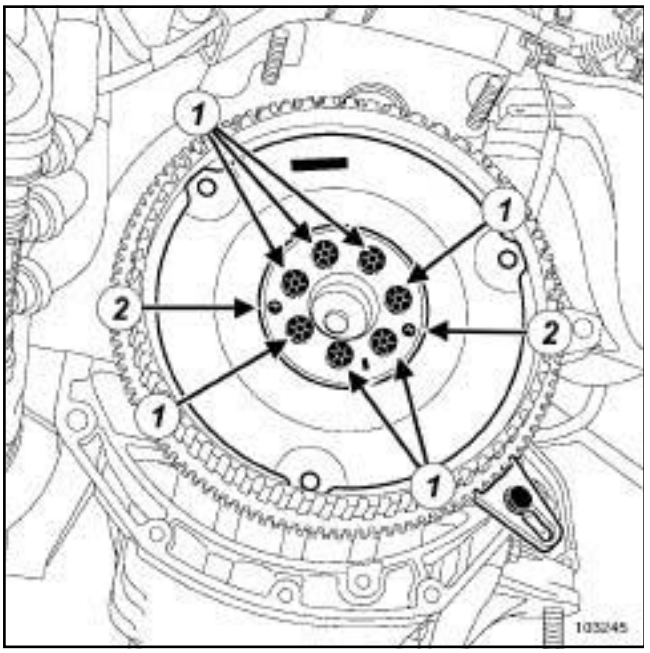

103245

❑ Position tool **(Mot. 1677)** to immobilise the starter motor ring gear.

K4M

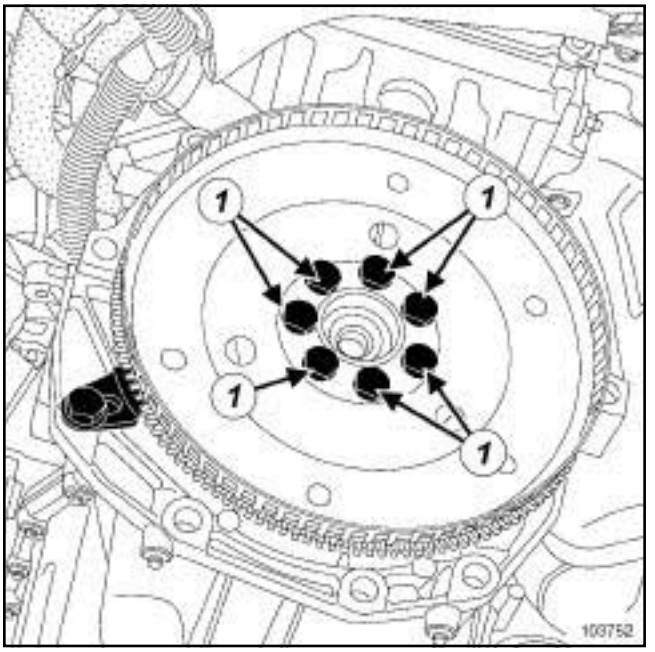

103752

❑ Position the **(Mot. 582-01)**.

❑ Remove:

- the bolts (**1**) ,
- the drive plate,
- the **(Mot. 1677)** or **(Mot. 582-01)**.

REFITTING

❑ Check that the drive plate is not damaged (run-out tolerance of **0.2 mm** on the outer diameter).

❑ Fit the drive plate, ensuring it is correctly positioned in relation to the centring pins ***(2)*** .

> Note:
>
> Apply **LOCTITE FRENBLOC** to the bolt threads.

❑ Tighten the bolts on the drive plate.

F4R

❑ Torque and angle tighten the **drive plate bolts (F4R engine) (4.5 daNm + 50° ± 5)** using the **(Mot. 1677)** to immobilise the starter motor ring gear.

F4R or K4M, and DP0

K4M

- Torque and angle tighten the **drive plate bolts (K4M engine) (5.5 daNm + 50° ± 5)** using the **(Mot. 582-01)** to immobilise the starter motor ring gear.

- To refit, proceed in the reverse order of removal.
- Connect the battery (see **Battery : Removal - Refitting**) (MR 364, 80A, Battery).
- Connect the **diagnostic tool** for the conformity check.

E84 or K84 or L84, and F9Q, and DP0

Essential special tooling	
Mot. 1677	Flywheel locking tool.

Essential equipment
diagnostic tool

Tightening torques ▽	
drive plate bolts	**45 Nm + 50° ± 5**

REMOVAL

I - REMOVAL PREPARATION OPERATION

❑ Remove the automatic transmission (see **Automatic gearbox: Removal - Refitting**) .

II - OPERATION FOR REMOVAL OF PART CONCERNED

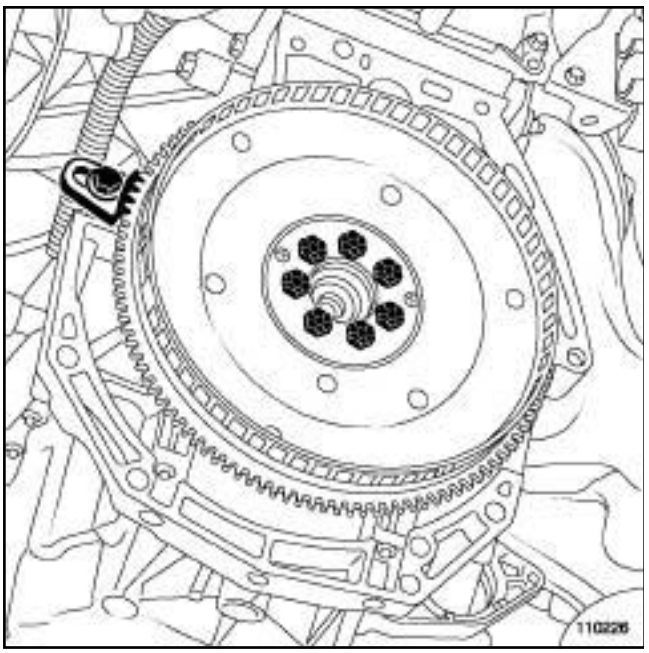

110226

❑ Fit the **(Mot. 1677)**.

❑ Remove:

- the drive plate bolts,
- the drive plate,
- the tool **(Mot. 1677)**.

REFITTING

I - REFITTING PREPARATION OPERATION

❑ Check that the drive plate is not damaged (run-out tolerance of **0.2 mm** on the outer diameter).

II - REFITTING OPERATION FOR PART CONCERNED

❑ Fit the drive plate.

❑ Ensure the drive plate is correctly positioned in relation to the centring pins.

❑ Apply **HIGH RESISTANCE THREAD LOCK** to the bolt threads.

❑ Screw the bolts onto the drive plate without tightening them.

❑ Position the **(Mot. 1677)**.

❑ Tighten to torque and angle the **drive plate bolts (45 Nm + 50° ± 5)**

❑ Remove the **(Mot. 1677)**.

III - FINAL OPERATION

❑ Refit the automatic transmission (see **Automatic gearbox: Removal - Refitting**) .

❑ Connect the **diagnostic tool** for the conformity check.

Final compression pressure: Check

B84 or C84 or E84 or K84 or L84, and M9R

Essential special tooling	
Mot. 1772	Compression end pressure test end piece-hose.

Essential equipment
self-contained starter
diagnostic tool

❑ Equipment required:

- socket spanner for removing/refitting heater plugs,
- diesel compression gauge.

I - AUTOMATIC MODE

❑ (See **Fault finding - Interpretation of commands**) (MR 366, 13B, Diesel injection).

II - MANUAL MODE

❑ Remove the heater plugs (see **13C**, **Preheating**, **Heater plugs Removal - Refitting**, page **13C-2**) .

❑ Fit the hose end piece **(Mot. 1772)** in place of one of the removed plugs.

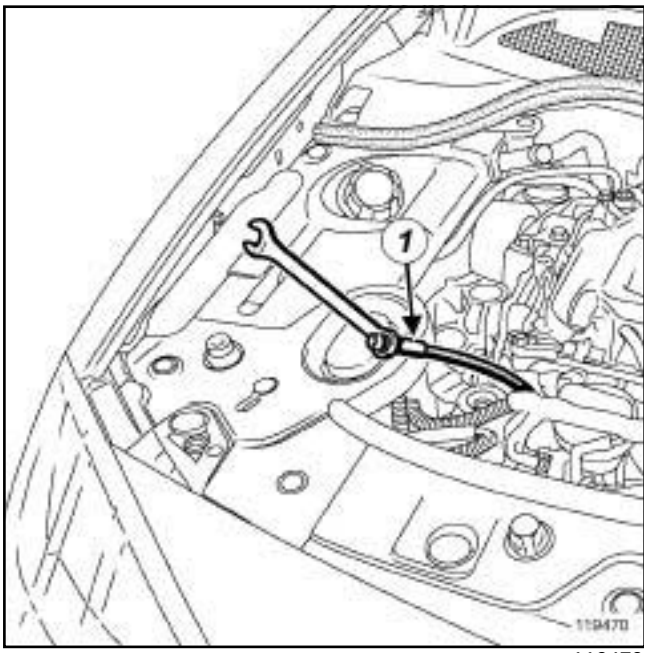

119470

❑ Moderately tighten the flexible end piece **(Mot. 1772)** (**1**) using an open-jawed spanner.

❑ Connect the **diesel compression gauge** available from the **Garage equipment** catalogue to the flexible end piece **(Mot. 1772)**.

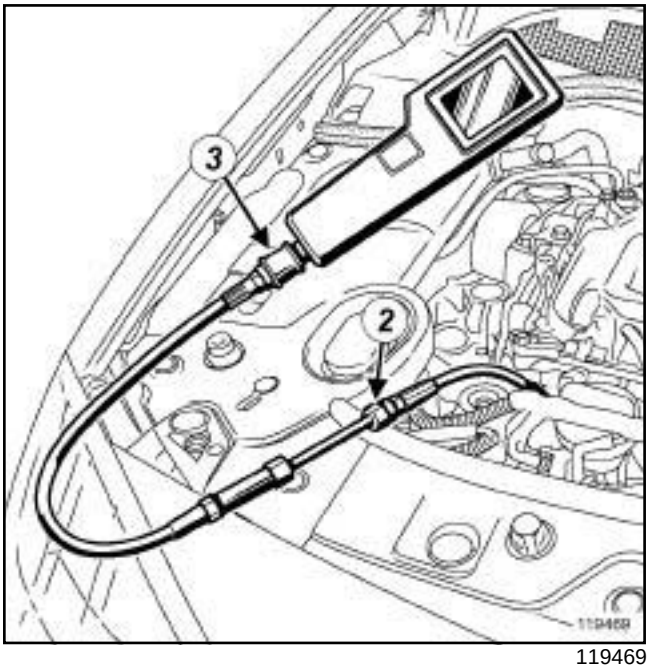

119469

❑ Moderately tighten the diesel compression gauge (**2**) to the hose end piece **(Mot. 1772)**.

❑ Open the discharge valve (**3**) of the diesel compression gauge to release the pressure.

❑ Close the discharge valve (**3**) of the diesel compression gauge.

❑ Connect a **self-contained starter** available from the **Garage equipment** catalogue.

❑ Force the + after ignition feed (see **Fault finding - Introduction)** (MR 366, 13B, Diesel injection).

❑ Connect the **diagnostic tool**.

❑ In the **diagnostic tool** :

- select the repair mode,
- select the programming mode,
- select command **SC037 COMPRESSION TEST**,
- select manual mode,
- check that the instructions displayed are observed in order to start the test,
- confirm to start the test.

❑ Follow the start-up cycle until the compression gauge needle stabilises to obtain the maximum value.

❑ Open the discharge valve to release all of the pressure in the compression gauge.

❑ Make progress with the diagram sheet.

❑ Carry out the same procedure for the other cylinders.

K9K

Essential equipment
self-contained starter
diagnostic tool

IMPORTANT
Wear heat protective gloves during the operation.

❑ Disconnect the battery (see **Battery: Removal - Refitting**) (MR 364, 80A, Battery).

❑ Remove the heater plugs (see **13C**, **Preheating**, **Heater plugs Removal - Refitting**, page **13C-2**) .

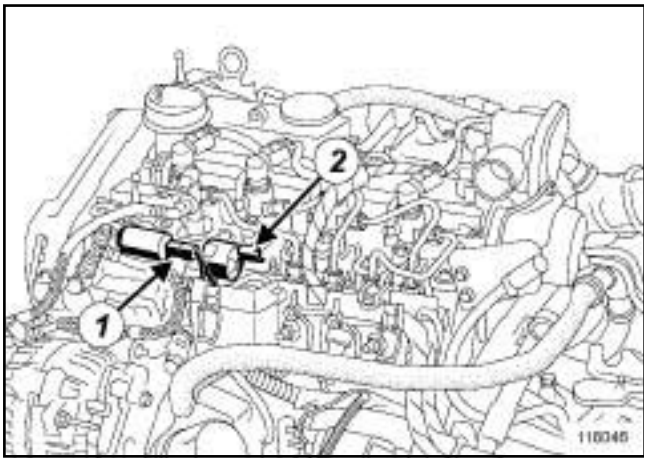

118046

❑ Disconnect:

- the pressure regulation solenoid valve connector (**1**) ,
- the flow control solenoid valve connector (**2**) ,

❑ Fit the hose end piecein place of one of the removed plugs.

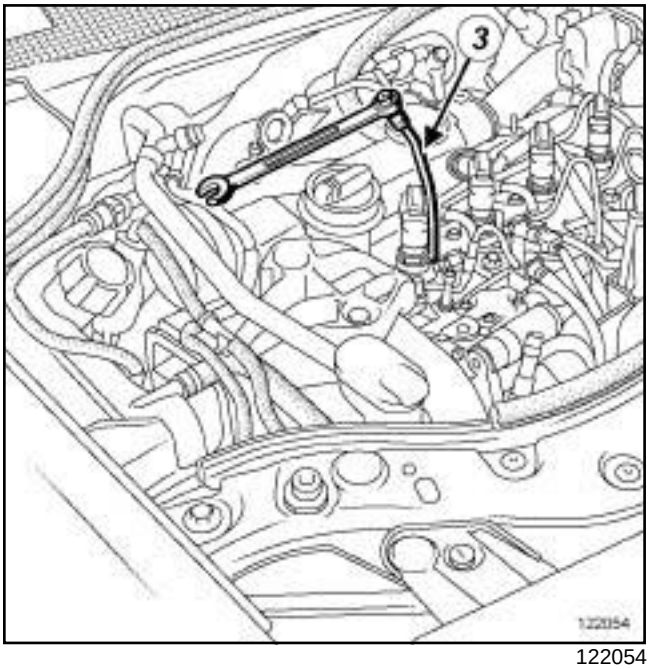

122054

❑ Moderately tighten the flexible end piece (**3**) with an open-jawed spanner.

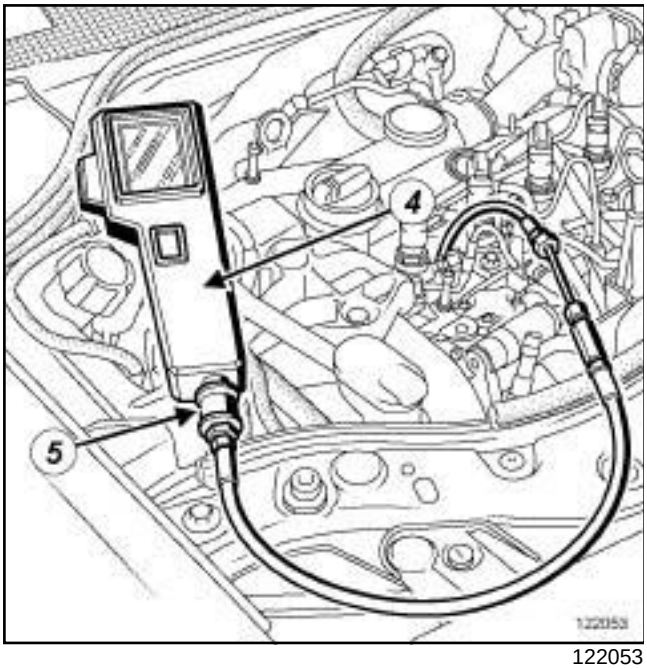

122053

- ❑ Moderately tighten the diesel compression gauge (**4**) to the hose end piece.
- ❑ Connect a **self-contained starter**.
- ❑ Run command with **diagnostic tool** :
  - **SC003 “save computer data”**,
  - **RZ019 “reinitialise programming”**.
- ❑ Run the starter for at least **15 seconds** until the compression gauge needle stabilises to obtain the maximum value.

> Note:
>
> The pressure value after compression must be at least **18 bars**.

- ❑ Open the discharge valve (**5**) to completely release the pressure in the compression gauge.
- ❑ Make progress with the diagram sheet.
- ❑ Carry out the same procedure for the other cylinders.
- ❑ Run the command using **diagnostic tool SC001 “enter computer data”**.
- ❑ Disconnect the **self-contained starter**.
- ❑ Undo:
  - the diesel compression gauge from the hose end piece,
  - the flexible end pieceusing an open-jawed spanner.
- ❑ Remove the flexible end piecewhich was fitted in place of one of the removed plugs.
- ❑ Connect:
  - the connector to the pressure regulation solenoid valve,
  - the flow control solenoid valve connector,
- ❑ Refit the heater plugs (see **13C**, **Preheating**, **Heater plugs Removal - Refitting**, page **13C-2**) .
- ❑ Connect the battery (see **Battery : Removal - Refitting**) (MR 364, 80A, Battery).
- ❑ Using the **diagnostic tool**, check for the absence of stored faults in the computers; deal with any faults and clear them if necessary.

K4J or K4M or K9K

Tightening torques ▽	
tensioning roller bolt	**40 N.m**

IMPORTANT
Wear protective gloves throughout the operation.

WARNING
Do not run the engine without the accessories belt to avoid damaging the crankshaft accessories pulley.

Note:
Never run the engine in the opposite direction to that of normal operation.

REMOVAL

I - REMOVAL PREPARATION OPERATION

❑ Position the vehicle on a two-post lift (see **Vehicle: Towing and lifting**) (02A, Lifting equipment).

❑ Remove:

- the engine covers,
- the front right-hand wheel,
- the front section of the front right-hand wheel arch liner (see **Front wheel arch liner: Removal - Refitting**) (55A, Exterior protection).

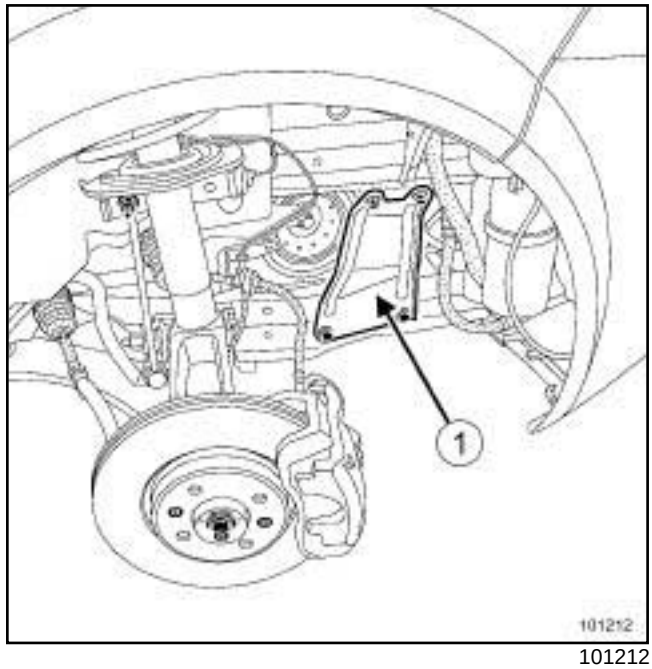

101212

❑ Remove:

- the right-hand side reinforcement bolts,
- the right-hand side reinforcement (**1**) .

II - OPERATION FOR REMOVAL OF PART CONCERNED

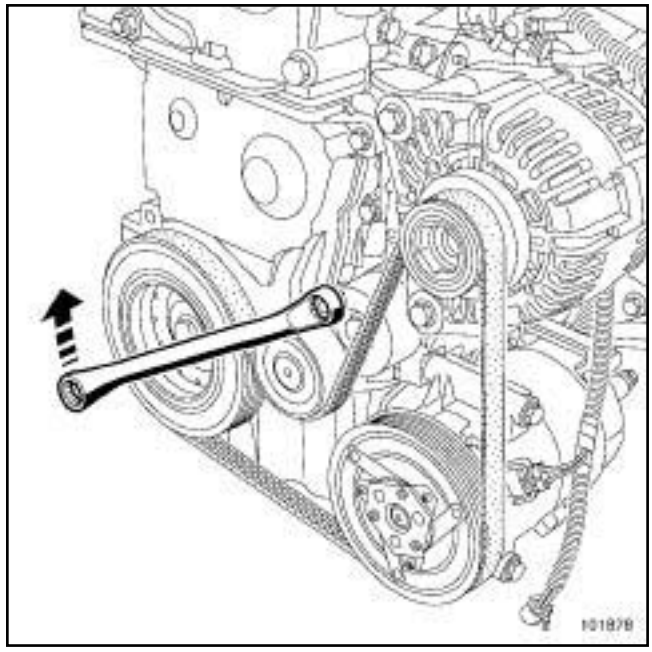

101878

❑ Turn the accessories belt auto tensioner clockwise using a **16 mm** spanner.

❑ Remove:

- the accessories belt,

K4J or K4M or K9K

- the tensioning roller bolt,
- the tensioning roller.

REFITTING

I - REMOVAL PREPARATION OPERATION

❑ **parts always to be replaced: Accessories belt (10,10,01,03)**.

❑ **parts always to be replaced: Accessories belt tensioning roller (10,10,01,04)**.

> **WARNING**
> Only use brushes with plastic or non-corrosive metal (brass) bristles.

❑ Use a brush to remove any deposits from the crankshaft pulley V-grooves.

II - REFITTING OPERATION FOR PART CONCERNED

❑ Refit the new tensioning roller.

❑ Tighten to torque the **tensioning roller bolt (40 N.m)**.

K4J, and AIR CONDITIONING or CLIMATE CONTROL – K4M, and AIR CONDITIONING or CLIMATE CONTROL – K9K, and AIR CONDITIONING or CLIMATE CONTROL

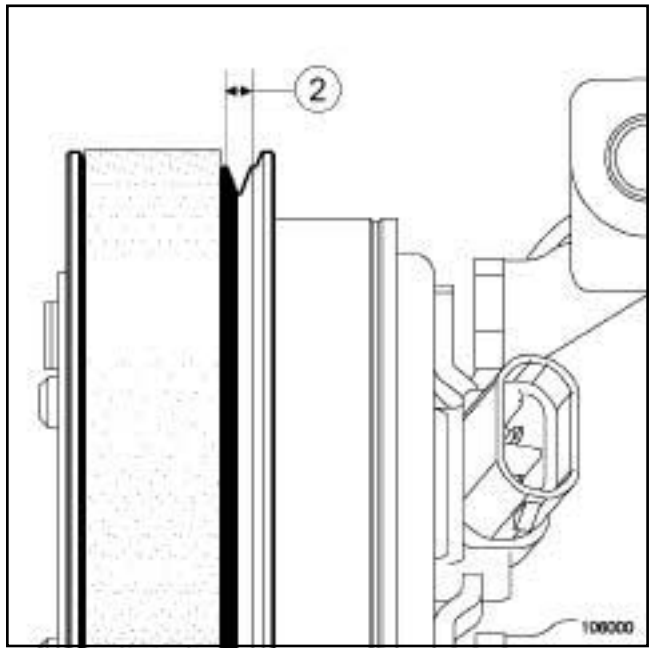

106000

❑

> Note:
> The accessories belt has five teeth, while the air conditioning compressor pulley has six grooves. When fitting the accessories belt, it is essential to check that groove (**2**) remains free.

❑ Refit the new accessories belt.

❑ Rotate the crankshaft twice to position the accessories belt correctly.

III - FINAL OPERATION

❑ Refit the right-hand side reinforcement (see **Radiator support cross member: Removal - Refitting**) (41A, Front lower structure).

❑ Refit:

- the front section of the front right-hand wheel arch liner (see **Front wheel arch liner: Removal - Refitting**) (55A, Exterior protection),
- the front right-hand wheel (see **Wheel: Removal - Refitting**) (35A, Wheels and tyres),
- the engine covers.

F4R – F9Q

Tightening torques ▽	
new tensioning roller mounting bolt	**50 N.m**

IMPORTANT
Wear protective gloves during the operation.

Note:

Never run the engine in the opposite direction to that of normal operation.

WARNING
Do not run the engine without the accessories belt to avoid damaging the crankshaft accessories pulley.

REMOVAL

I - REMOVAL PREPARATION OPERATION

❑ Position the vehicle on a two-post lift (see **Vehicle: Towing and lifting**) (02A, Lifting equipment).

❑ Remove:

- the engine covers,
- the front right-hand wheel (see **Wheel: Removal - Refitting**) (35A, Wheels and tyres),
- the front right-hand wheel arch liner (see **Front wheel arch liner: Removal - Refitting**) (55A, Exterior protection).

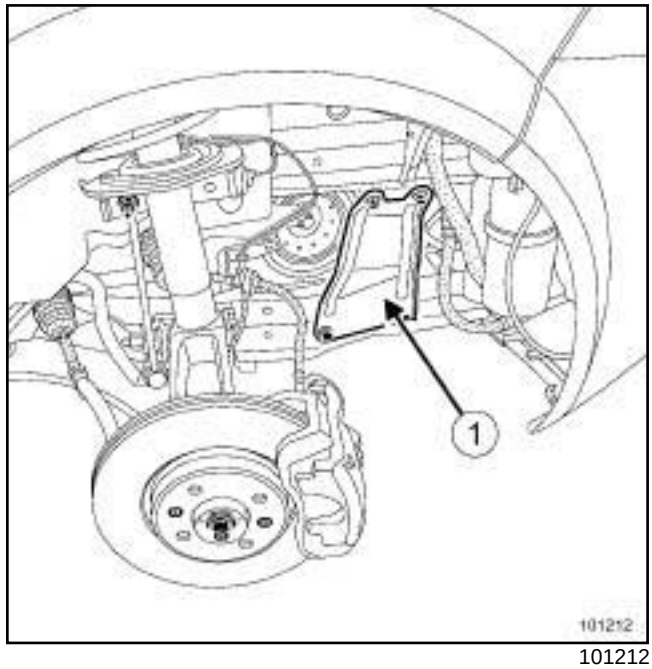

101212

❑ Remove the right-hand side reinforcement (**1**) .

II - REMOVAL OF ACCESSORIES BELT

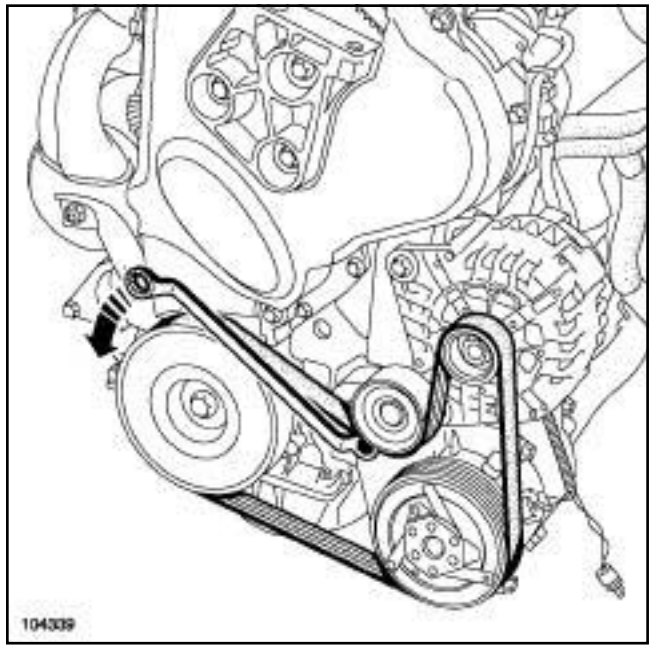

104339

❑ Turn the accessories belt auto tensioner anti-clockwise using a **16 mm** spanner.

❑ Remove:

- the accessories belt,
- the tensioning roller.

F4R – F9Q

REFITTING

I - REFITTING PREPARATION OPERATION

❑ **parts always to be replaced: Accessories belt (10,10,01,03)**

parts always to be replaced: Accessories belt tensioning roller (10,10,01,04)

parts always to be replaced: Accessories tensioning roller bolt (10,10,01,09)

❑

> **WARNING**
> Only use brushes with plastic or non-corrosive metal (brass) bristles.

❑ Use a brush to remove any deposits from the crankshaft pulley V-grooves.

II - REFITTING THE ACCESSORIES BELT

❑ Refit the tension wheel.

❑ Torque tighten the **new tensioning roller mounting bolt (50 N.m)**.

❑ Refit the accessories belt.

❑ Rotate the crankshaft twice to position the accessories belt correctly.

III - FINAL OPERATION

❑ Refit the right-hand side reinforcement.

❑ Refit:

- the right-hand side reinforcement ,
- the front right-hand wheel arch liner (see **Front wheel arch liner: Removal - Refitting**) (55A, Exterior protection),
- the front right-hand wheel (see **Wheel: Removal - Refitting**) (35A, Wheels and tyres),
- the engine covers.

M9R

Tightening torques ▽	
fixed roller bolt	**44 N.m**
tensioning roller bolts	**25 Nm**

IMPORTANT
Wear protective gloves during the operation.

WARNING
Do not run the engine without the accessories belt to avoid damaging the crankshaft accessories pulley.

REMOVAL

I - REMOVAL PREPARATION OPERATION

❑ Position the vehicle on a two-post lift (see **Vehicle: Towing and lifting**) (02A, Lifting equipment).

❑ Remove the engine covers.

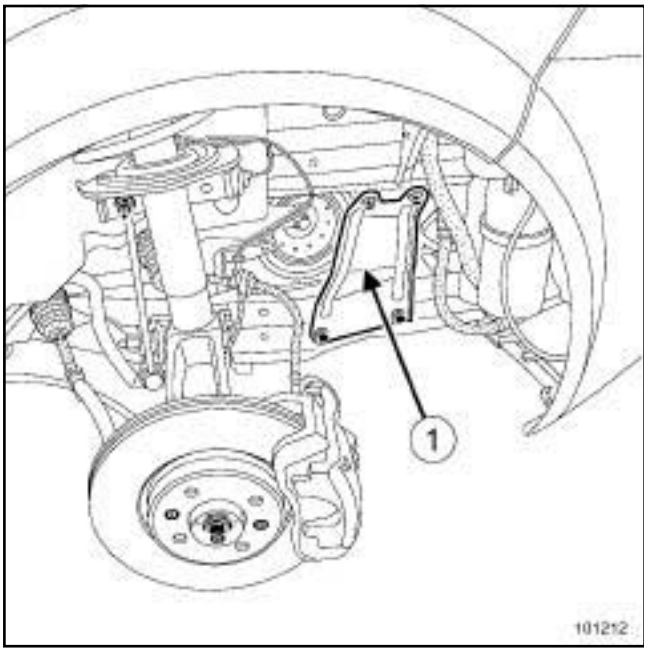

101212

❑ Remove:

- the front right-hand wheel (see **Wheel: Removal - Refitting**) (35A, Wheels and tyres),
- the front section of the front right-hand wheel arch liner (see **Front wheel arch liner: Removal - Refitting**) (55A, Exterior protection),
- the right-hand side reinforcement bolts on the half-subframe cross member,
- the right-hand side reinforcement from the half-subframe cross member (**1**) .

II - REMOVAL OF THE ACCESSORIES BELT

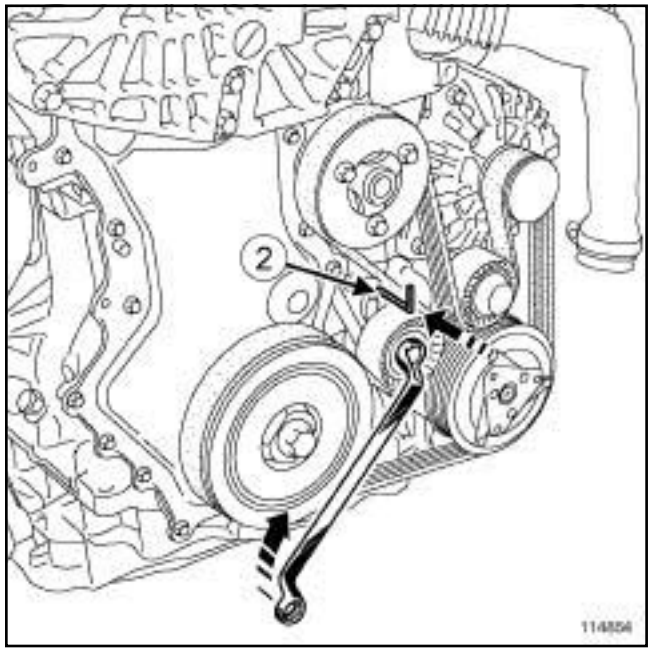

114854

❑ Position a **3 mm** Allen key in the tensioning roller hole (**2**) .

❑ Move accessories belt tensioning pulley clockwise until the Allen key is fully inserted.

❑ Remove the accessories belt.

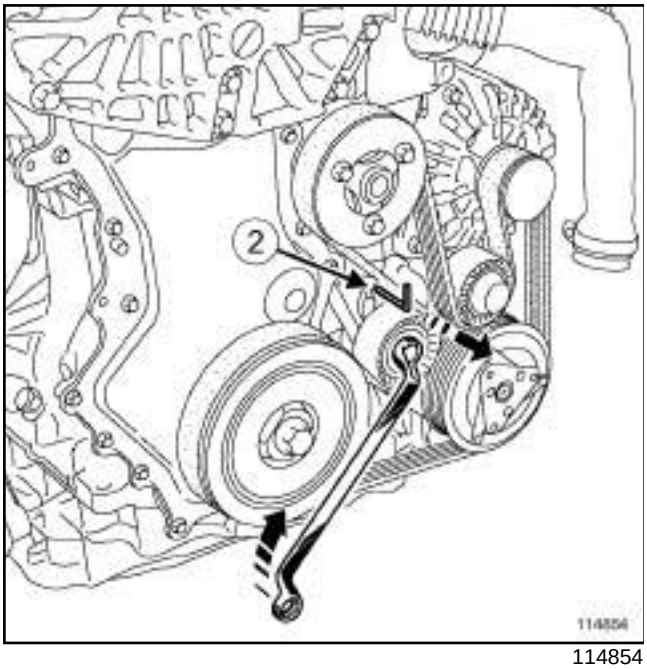

114854

- Slightly pivot the accessories belt tensioning roller clockwise.
- Remove the **3 mm** Allen key (**2**) .
- Pivot the accessories belt tensioning roller anti-clockwise as much as possible.

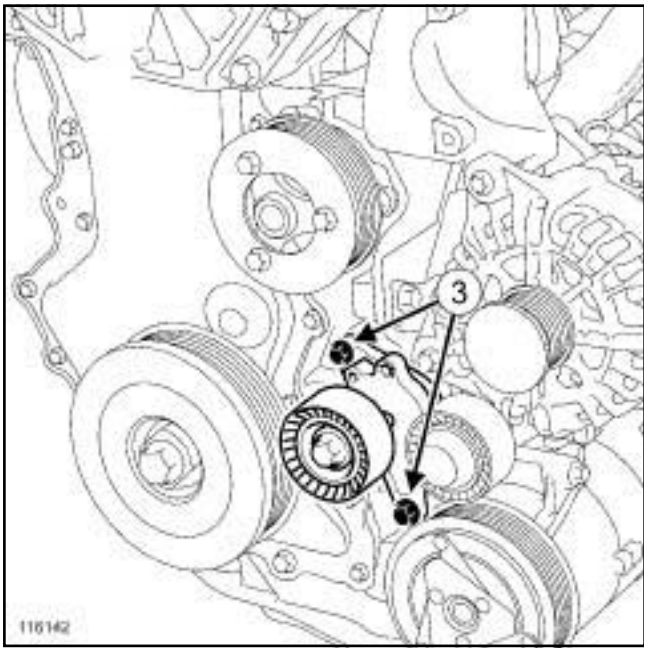

116142

- Remove:
  - the tensioning roller bolts (**3**) ,
  - the tensioning roller.

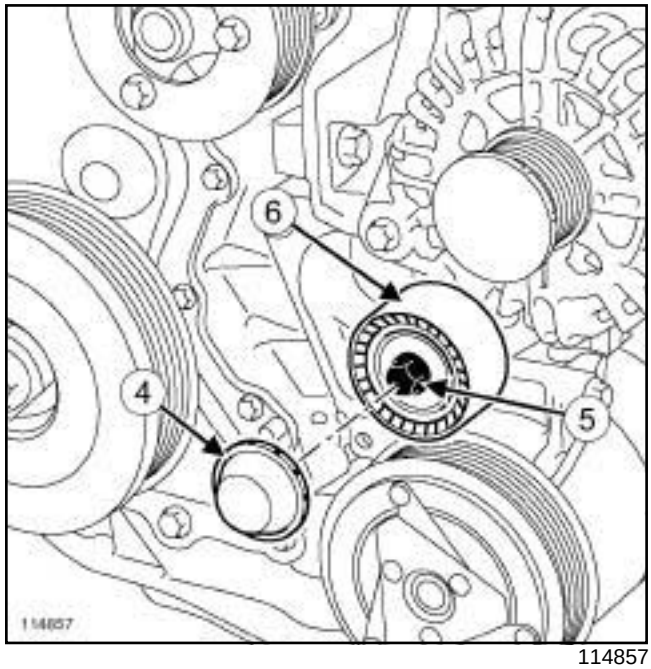

114857

- Remove:
  - the fixed roller bolt protector (**4**) ,
  - the fixed roller bolt (**5**) ,
  - the fixed roller (**6**) ,
  - the crankshaft accessories pulley (see **11A**, **Top and front of engine**, **Crankshaft accessories pulley: Removal - Refitting**, page **11A-11**) .

REFITTING

I - REFITTING PREPARATION OPERATION

- **parts always to be replaced: Accessories belt (10,10,01,03)**

  parts always to be replaced: Accessories belt tensioning roller (10,10,01,04)

  parts always to be replaced: Accessories fixed roller (10,10,01,06)

  parts always to be replaced: Crankshaft accessories pulley bolts (10,10,01,11)
- Use a brush to remove any deposits from the pulley V-grooves.

> **WARNING**
> Only use brushes with plastic or non-corrosive metal (brass) bristles.

M9R

II - REFITTING THE ACCESSORIES BELT

❏ Refit the fixed roller.

❏ Torque tighten the **fixed roller bolt (44 N.m)**.

❏ Refit the fixed roller bolt protector,

> Note:
>
> The tensioning roller is supplied with pin.

❏ Refit the tension wheel.

❏ Torque tighten the **tensioning roller bolts (25 Nm)**.

❏ Refit the crankshaft accessories pulley (see **11A**, **Top and front of engine**, **Crankshaft accessories pulley: Removal - Refitting**, page **11A-11**) .

❏ Refit the accessories belt.

❏ Remove the tensioning roller pin.

❏ Turn the crankshaft twice.

❏ Check that the accessories belt V-grooves are well positioned in the V-grooves of all the pulleys.

III - FINAL OPERATION

❏ Refit:

- the right-hand side reinforcement from the half-subframe cross member,
- the front section of the front right-hand wheel arch liner (see **Front wheel arch liner: Removal - Refitting**) (55A, Exterior protection),
- the front right-hand wheel (see **Wheel: Removal - Refitting**) (35A, Wheels and tyres),
- the engine covers.

B84 or C84 or E84 or K84 or L84, and M9R

Essential special tooling	
Mot. 1770	Crankshaft pulley locking tool.

Tightening torques ▽	
crankshaft accessories pulley bolt	**50 Nm + 85° ± 6°**

REMOVAL

I - REMOVAL PREPARATION OPERATION

❑ Position the vehicle on a two-post lift (see **Vehicle: Towing and lifting**) (MR 364, 02A, Lifting equipment).

❑ Disconnect the battery (see **Battery: Removal - Refitting**) (MR 364, 80A, Battery).

❑ Remove the front engine cover.

❑ Remove:

- the front right-hand wheel (see **Wheel: Removal - Refitting**) (MR 364, 35A, Wheels and tyres),
- the front section of the front right-hand wheel arch liner (see **Front wheel arch liner: Removal - Refitting**) (MR 365, 55A, Exterior protection),

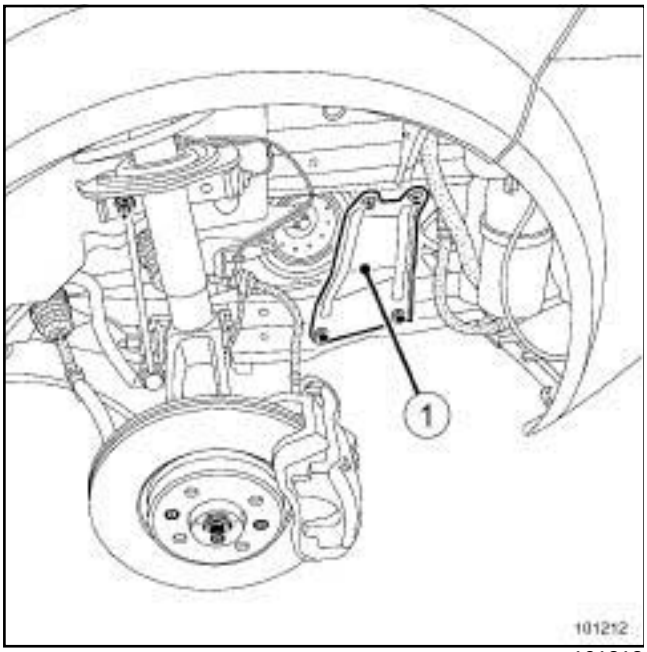

101212

❑ Remove:

- the right-hand side stiffener bolts on the half-subframe cross member (**1**) ,
- the right-hand side stiffener from the half-subframe cross member,
- the accessories belt (see **11A**, **Top and front of engine**, **Accessories belt: Removal - Refitting**, page **11A-4**) .

II - OPERATION FOR REMOVAL OF PART CONCERNED

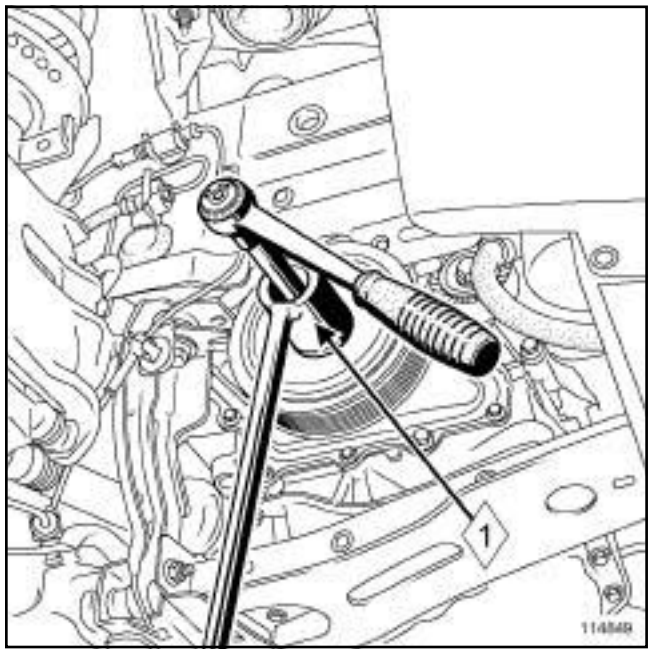

114849

❑ Immobilise the crankshaft accessories pulley using the **(Mot. 1770)** (**1**) .

❑ Remove:

- the bolt,
- the washer,
- the crankshaft accessories pulley.

B84 or C84 or E84 or K84 or L84, and M9R

REFITTING

I - REFITTING PREPARATIONS OPERATION

❑ In case of reuse, clean the crankshaft accessories pulley grooves using a brush to get rid of any deposit.

> **WARNING**
> Only use brushes with plastic or non-corrosive metal (brass) bristles.

> **WARNING**
> Do not run the engine without the accessories belt to avoid damaging the crankshaft accessories pulley.

> Note:
> Only replace the crankshaft accessories pulley during general maintenance operations.

❑ **parts always to be replaced: Accessories belt (10,10,01,03)**,

- tensioning roller,
- fixed roller,
- crankshaft accessories pulley bolts.

II - REFITTING OPERATION FOR PART CONCERNED

❑ Refit the crankshaft accessories pulley by inserting it onto the two crankshaft flat surfaces.

❑ Refit the washer inside the crankshaft accessories pulley by inserting it onto the two crankshaft flat surfaces.

❑ Check that the washer fits properly on the crankshaft flat surfaces.

❑ Fit the crankshaft accessories pulley bolt without tightening.

❑ Torque tighten and angle the **crankshaft accessories pulley bolt (50 Nm + 85° ± 6°)** using the **(Mot. 1770)**.

III - FINAL OPERATION.

❑ Refit:

- the accessories belt (see **11A**, **Top and front of engine**, **Accessories belt: Removal - Refitting**, page **11A-4**) ,
- the right-hand side stiffener from the half-subframe cross member,
- the right-hand side stiffener bolts on the half-subframe cross member,
- the front section of the front right-hand wheel arch liner (see **Front wheel arch liner: Removal - Refitting**) (MR 365, 55A, Exterior protection),
- the front right-hand wheel (see **Wheel: Removal - Refitting**) (MR 364, 35A, Wheels and tyres).

❑ Connect the battery (see **Battery: Removal - Refitting**) (MR 364, 80A, Battery).

K9K, and 732 or 734

Tightening torques ▽	
crankshaft accessories pulley M12 bolt	**60 Nm + 100° ± 10**
crankshaft accessories pulley M14 bolt	**120 Nm + 95° ± 15**
side reinforcement bolts	**21 Nm**

IMPORTANT
Wear protective gloves during the operation.

REMOVAL

I - REMOVAL PREPARATION OPERATION

❑ Position the vehicle on a two-post lift (see **Vehicle: Towing and lifting**) (MR 364, 02A, Lifting equipment).

❑ Remove:

- the front right-hand wheel (see **Wheel: Removal - Refitting**) (MR 364, 35A, Wheels and tyres),
- the front section of the front right-hand wheel arch liner (see **Front wheel arch liner: Removal - Refitting**) (MR 365, 55A, Exterior protection).

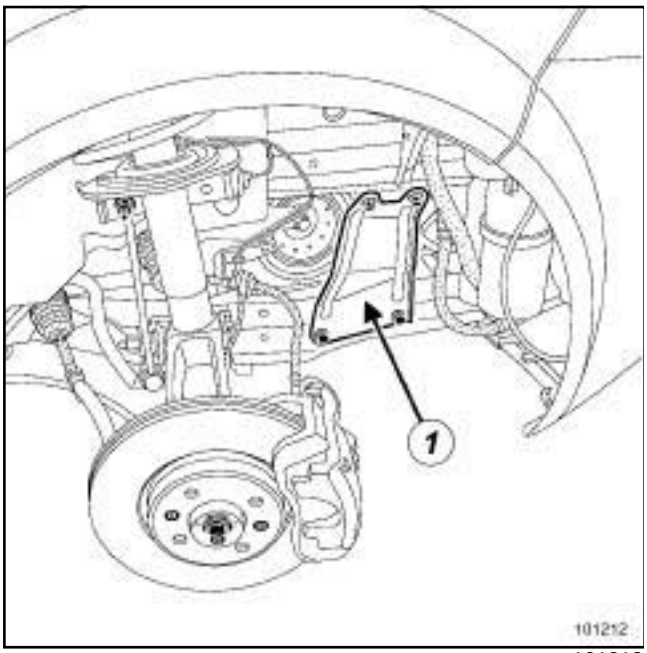

101212

❑ Remove:

- the side stiffener bolts,
- the side stiffener (**1**) ,
- the accessories belt (see **11A**, **Top and front of engine**, **Accessories belt: Removal - Refitting**, page **11A-4**) .

II - OPERATION FOR REMOVAL OF PART CONCERNED

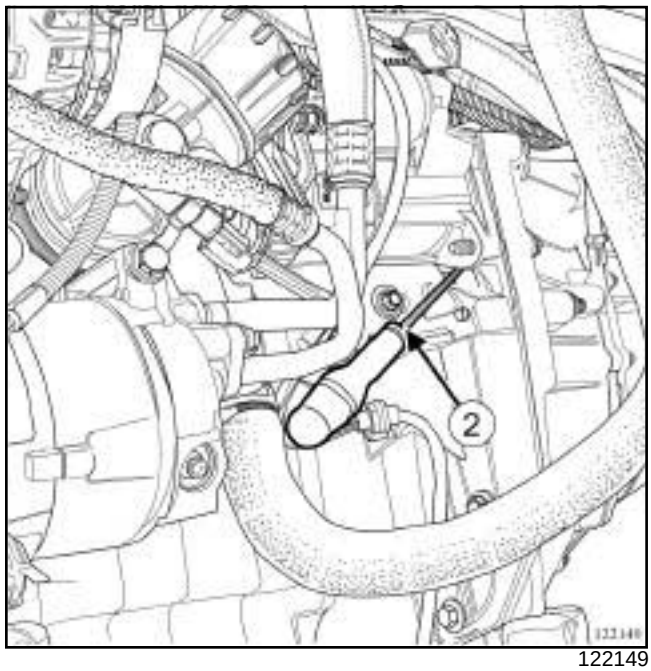

122149

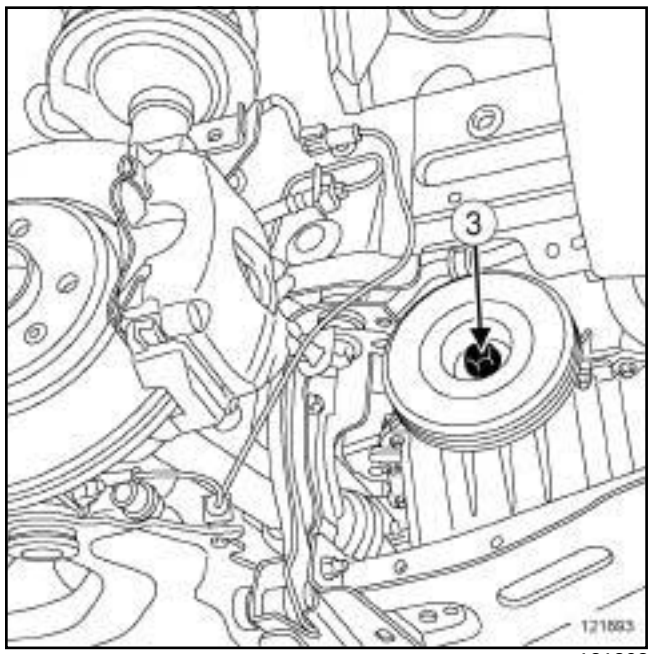

121893

❑ Remove:

- the bolt (**3**) from the crankshaft accessories pulley, locking the flywheel using a flat screwdriver (**2**) ,
- the crankshaft accessories pulley.

K9K, and 732 or 734

REFITTING

I - REFITTING OPERATION FOR PART CONCERNED

❏ Refit:

- the crankshaft accessories pulley,
- the crankshaft accessories pulley bolt, locking the engine flywheel with a flat-blade screwdriver.

❏ Torque tighten and angle:

- the **crankshaft accessories pulley M12 bolt (60 Nm + 100° ± 10)**,
- the **crankshaft accessories pulley M14 bolt (120 Nm + 95° ± 15)**.

II - FINAL OPERATION.

❏ Refit:

- the accessories belt (see **11A**, **Top and front of engine**, **Accessories belt: Removal - Refitting**, page **11A-4**) ,
- the side stiffener,
- the side stiffener bolts.

❏ Torque tighten the **side reinforcement bolts (21 Nm)**.

❏ Refit:

- the front section of the front right-hand wheel arch liner (see **Front wheel arch liner: Removal - Refitting**) (MR 365, 55A, Exterior protection),
- the front right-hand wheel (see **Wheel: Removal - Refitting**) (MR 364, 35A, Wheels and tyres).

B84 or C84 or G84 or S84, and K9K, and 722 or 724 or 728 or 729

Essential special tooling	
Mot. 1489	TDC locating pin.

Tightening torques ▽	
crankshaft accessories pulley bolt	**120 N.m + 95° ± 15°**
TDC setting pin plug	**25 N.m**

IMPORTANT
Wear protective gloves during the operation.

REMOVAL

I - REMOVAL PREPARATION OPERATION

❑ Position the vehicle on a two-post lift (see **Vehicle: Towing and lifting**) (02A, Lifting equipment).

❑ Remove:

- the front right-hand wheel (see **Wheel: Removal - Refitting**) (35A, Wheels and tyres),
- the front section of the front right-hand wheel arch liner (see **Front wheel arch liner: Removal - Refitting**) (55A, Exterior protection),
- the accessories belt (see **11A**, **Top and front of engine**, **Accessories belt: Removal - Refitting**, page **11A-4**) .

II - OPERATION FOR REMOVAL OF PART CONCERNED

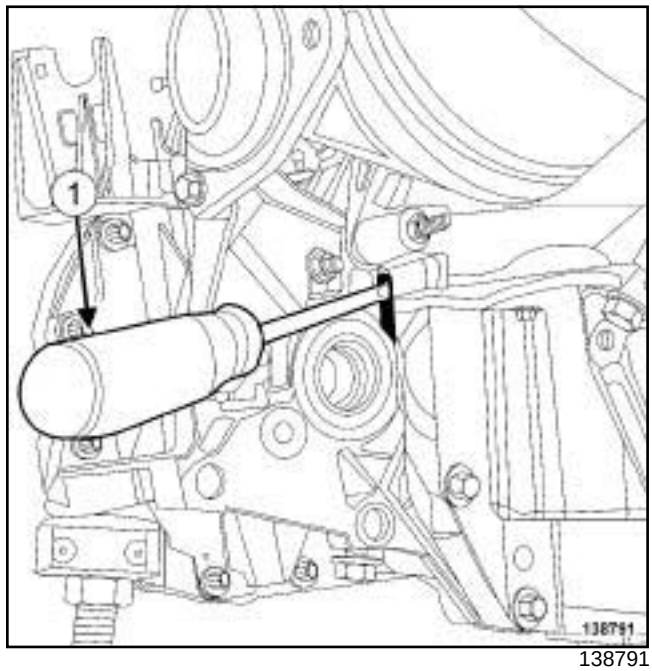

138791

❑ Lock the flywheel using a screwdriver (**1**) via a hole on the clutch housing, at the back of the engine.

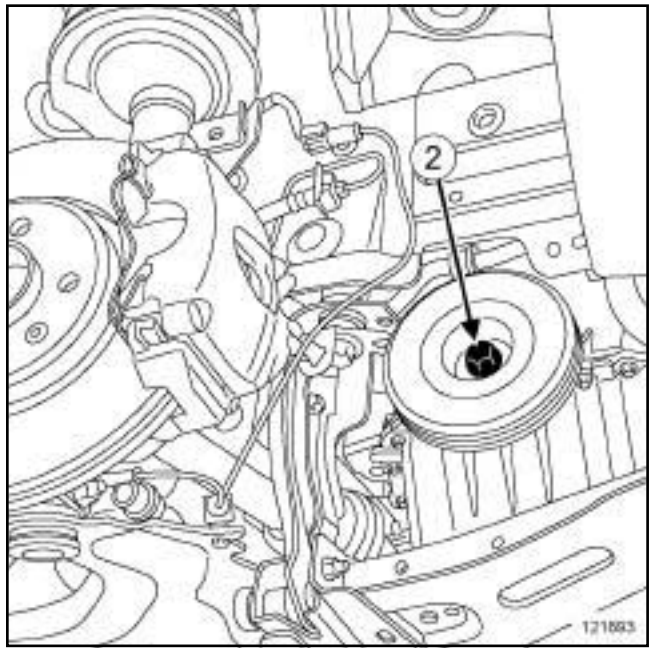

121893

❑ Remove:

- the crankshaft accessories pulley bolt (**2**) .
- the crankshaft accessories pulley.

❑ Remove the screwdriver from the hole on the clutch housing.

B84 or C84 or G84 or S84, and K9K, and 722 or 724 or 728 or 729

REFITTING

I - REFITTING PREPARATION OPERATION

❑ **parts always to be replaced: Crankshaft accessories pulley bolts (10,10,01,11)**.

> **WARNING**
> Only use brushes with plastic or non-corrosive metal (brass) bristles.

❑ In case of reuse, clean the crankshaft accessories V-pulley using a brush to get rid of any deposit.

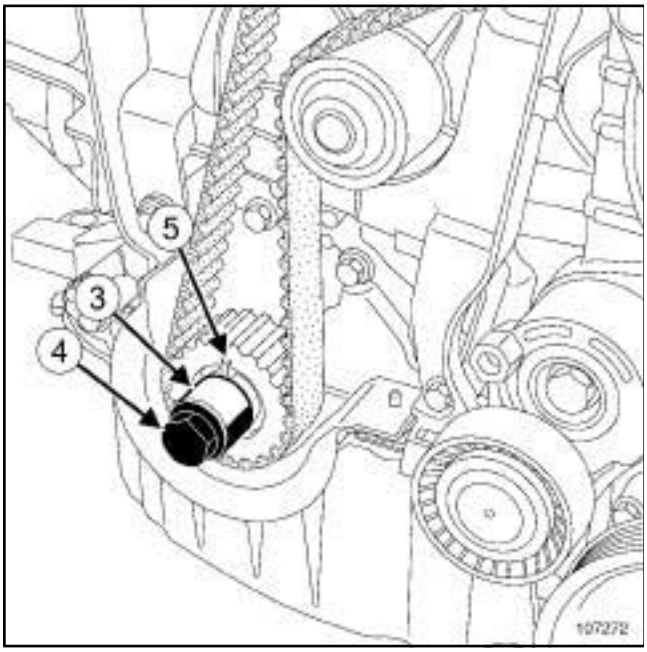

107272

❑ Refit the old crankshaft accessories pulley bolt (**4**) with a spacer (**3**) .

❑ Turn the crankshaft clockwise (timing end) using the old bolt of the crankshaft accessories pulley, until the collet of the crankshaft timing pinion (**5**) is almost vertical and facing upwards.

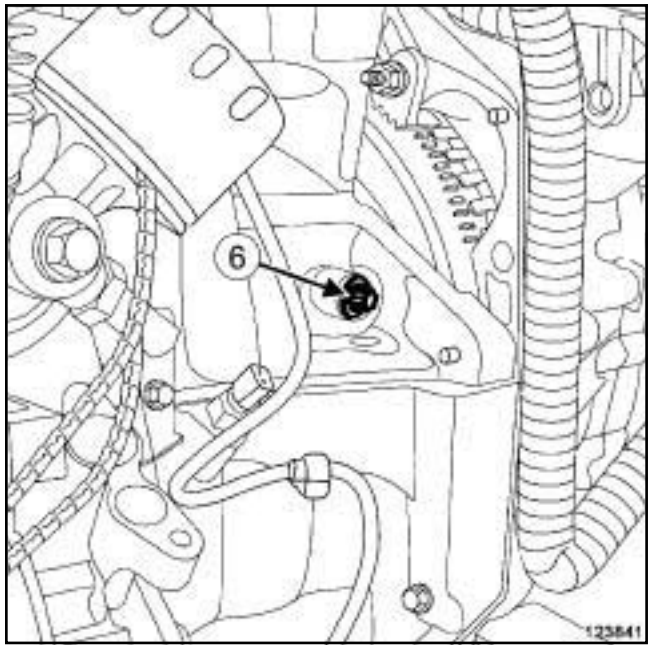

123841

❑ Remove the TDC setting pin plug (**6**) .

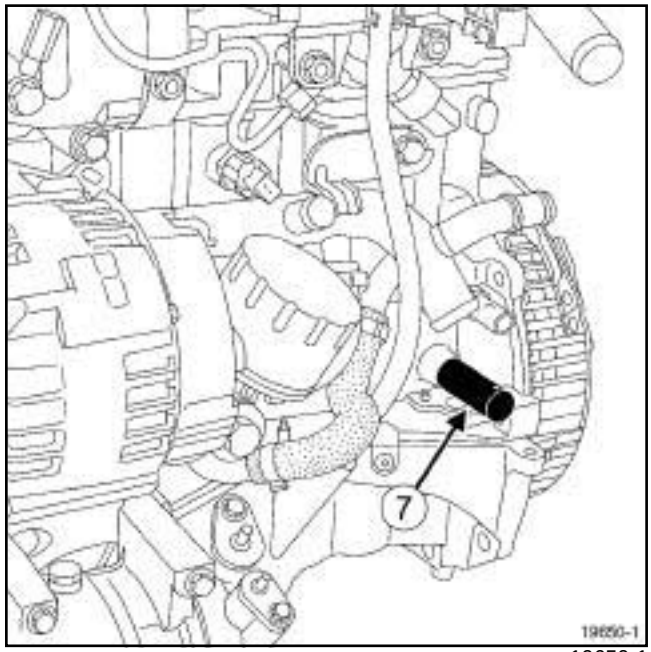

19650-1

❑ Lock the flywheel using the **(Mot. 1489)** at (**7**) .

❑ Remove the old bolt of the crankshaft accessories pulley fitted with its spacer.

II - REFITTING OPERATION FOR PART CONCERNED

❑ Refit:

- the crankshaft accessories pulley,
- a new crankshaft accessories pulley bolt.

B84 or C84 or G84 or S84, and K9K, and 722 or 724 or 728 or 729

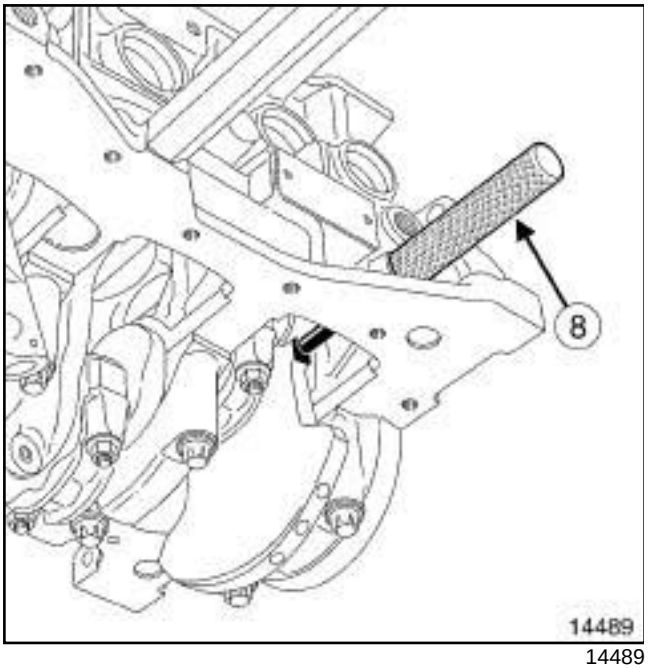

14489

- Turn the crankshaft clockwise (timing end) smoothly using the bolt of the crankshaft accessories pulley, until the crankshaft presses against the tool **(Mot. 1489)** (**8**) .
- Torque and angle tighten the **crankshaft accessories pulley bolt (120 N.m + 95° ± 15°)**.
- Remove the **(Mot. 1489)** from the cylinder block.

III - FINAL OPERATION

- Apply a drop of **SILICONE ADHESIVE SEALANT** (see **Vehicle: Parts and ingredients for the repairwork**) (04B, Consumables - Products) to the thread of the TDC setting pin plug.
- Torque tighten the **TDC setting pin plug (25 N.m)**.
- Refit:
  - the accessories belt (see **11A**, **Top and front of engine**, **Accessories belt: Removal - Refitting**, page **11A-4**) ,
  - the front section of the front wheel arch liner (see **Front wheel arch liner: Removal - Refitting**) (55A, Exterior protection),
  - the front right-hand wheel (see **Wheel: Removal - Refitting**) (35A, Wheels and tyres).

K9K, and 722 or 724 or 728 or 729

Essential special tooling	
Mot. 1489	TDC locating pin.
Mot. 1430	Set of 5 crankshaft and camshaft pulley timing pins.
Mot. 1672	Lower engine support.

Essential equipment
protective gloves
1/2" female torx socket (12.7 mm square drive)
hexagonal socket
roll pin punch
offset spanner
torque wrench
angle torque wrench
cylinder head bolt tightening gauge (angular measuring type)

Tightening torques ▽	
crankshaft accessories pulley M12 bolt	**60 N.m + 100° ± 10°**
tensioning roller bolt	**27 N.m**
camshaft timing sprocket crown bolts	**14 N.m**
crankshaft accessories pulley M 14 bolt	**120 N.m + 95° ± 15°**
TDC pin plug	**25 N.m**
cylinder head suspended mounting bolts	**25 N.m**
camshaft position sensor bolt	**8 N.m**

IMPORTANT
Wear protective gloves during the operation.

WARNING
Do not run the engine without the accessories belt to avoid damaging the crankshaft accessories pulley.

REMOVAL

I - REMOVAL PREPARATION OPERATION

❑ Position the vehicle on a two-post lift (see **Vehicle: Towing and lifting**) (02A, Lifting equipment).

❑ Disconnect the battery (see **Battery: Removal - Refitting**) (80A, Battery).

❑ Remove:

- the engine cover,
- the front right-hand wheel (see **Wheel: Removal - Refitting**) (35A, Wheels and tyres),
- the front section of the front right-hand wheel arch liner (see **Front wheel arch liner: Removal - Refitting**) (55A, Exterior protection),
- the engine undertray bolts,
- the engine undertray,
- the lower engine tie-bar (see **19D**, **Engine mounting**, **Lower engine tie-bar: Removal - Refitting**, page **19D-36**)
- the right-hand suspended engine mounting (see **19D**, **Engine mounting**, **Right-hand suspended engine mounting: Removal - Refitting**, page **19D-20**) ,
- the accessories belt (see **11A**, **Top and front of engine**, **Accessories belt: Removal - Refitting**, page **11A-4**) .

Note:
Do not damage the air conditioning pipes.

II - OPERATION FOR REMOVAL OF PART CONCERNED

❑

Note:
There are two types of timing belt assembly.

K9K, and 722 or 724 or 728 or 729

III - FIRST FITTING

Recommendations for repair

❑

Note:

This procedure is applicable to engines manufactured up to 02/12/2005 fitted with a single unit camshaft timing sprocket and a crankshaft timing sprocket without collet.

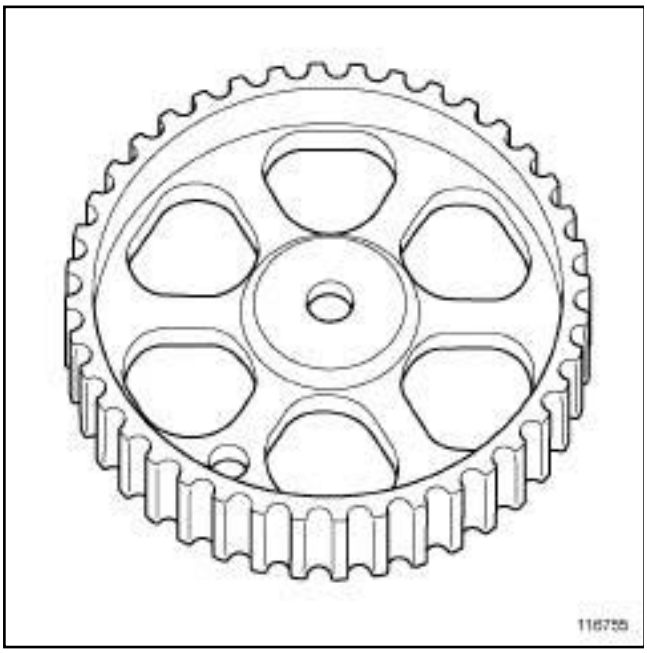

116755

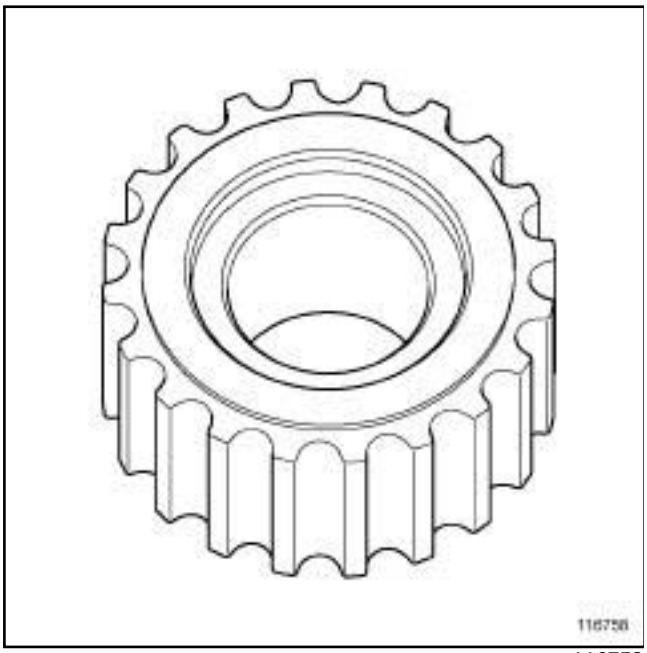

116758

❑ Wear **protective gloves** during the operation.

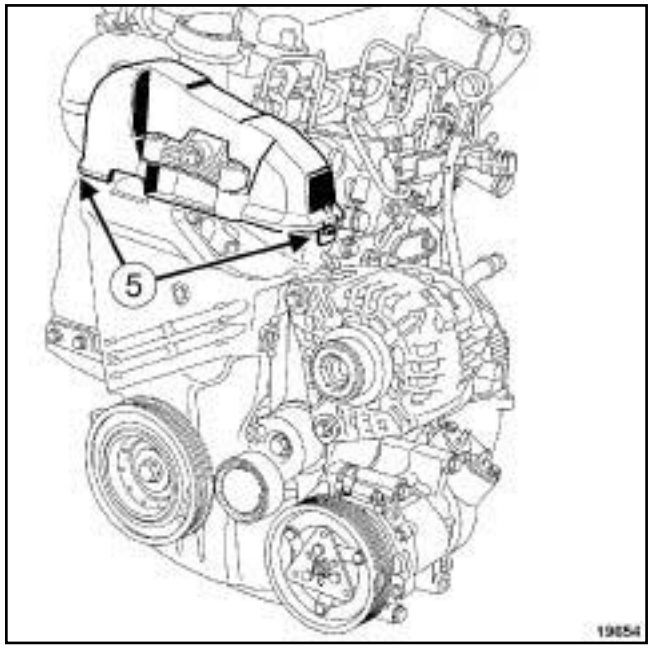

19654

❑ Remove the upper timing cover by unclipping both tabs (**5**) .

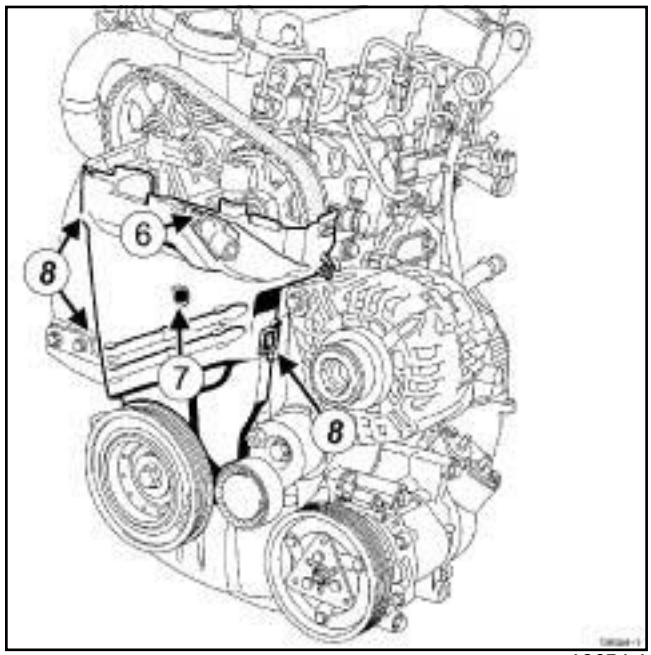

19654-1

❑ Remove:

- the camshaft position sensor (**6**) ,
- the plastic bolt (**7**) .

❑ Unclip the three tabs (**8**) .

❑ Remove the lower timing cover.

K9K, and 722 or 724 or 728 or 729

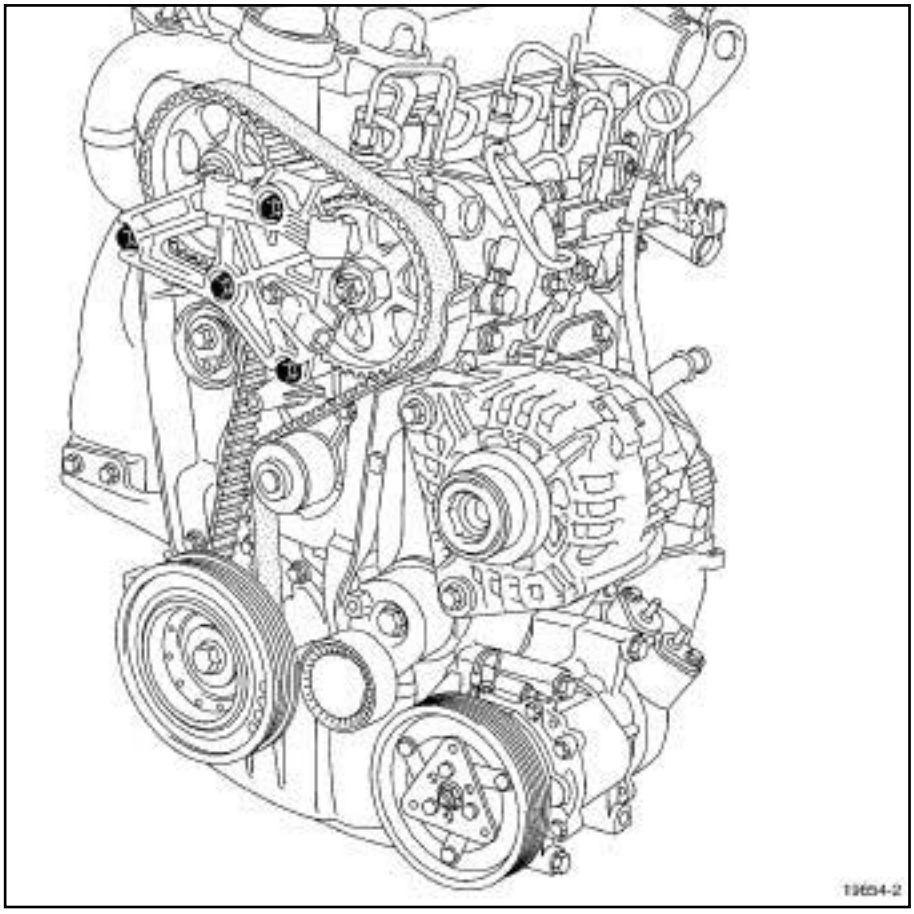

19654-2

❑ Remove the cylinder head suspended mounting .

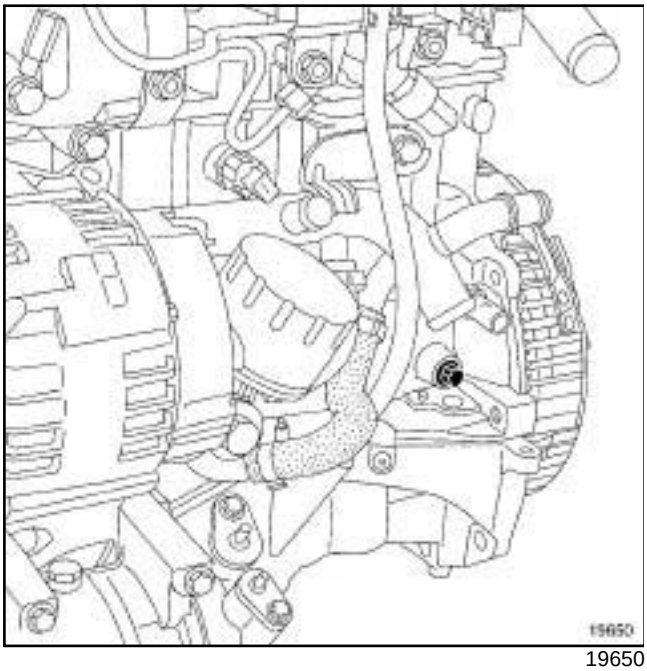

19650

❑ Remove the TDC pin plug using a **1/2" female torx socket (12.7 mm square drive) (14)**.

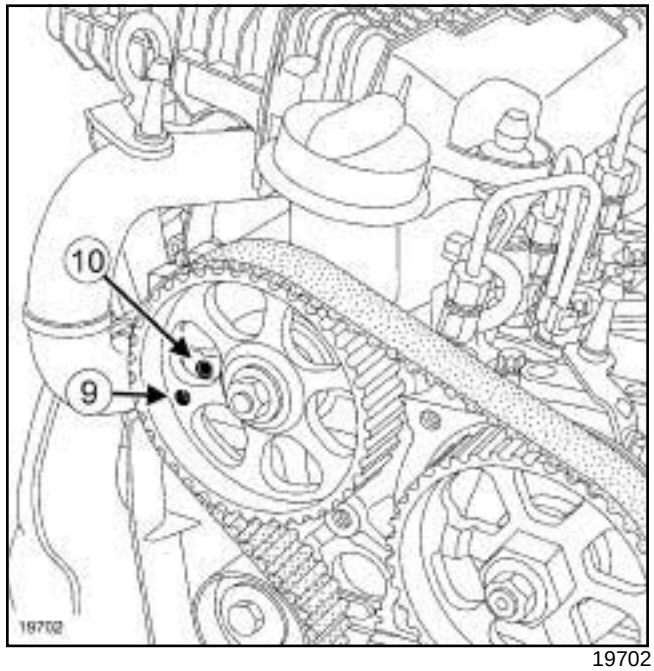

19702

❑ Rotate the crankshaft clockwise (timing end) to position the hole (**9**) in the camshaft timing sprocket almost opposite the hole (**10**) in the cylinder head.

K9K, and 722 or 724 or 728 or 729

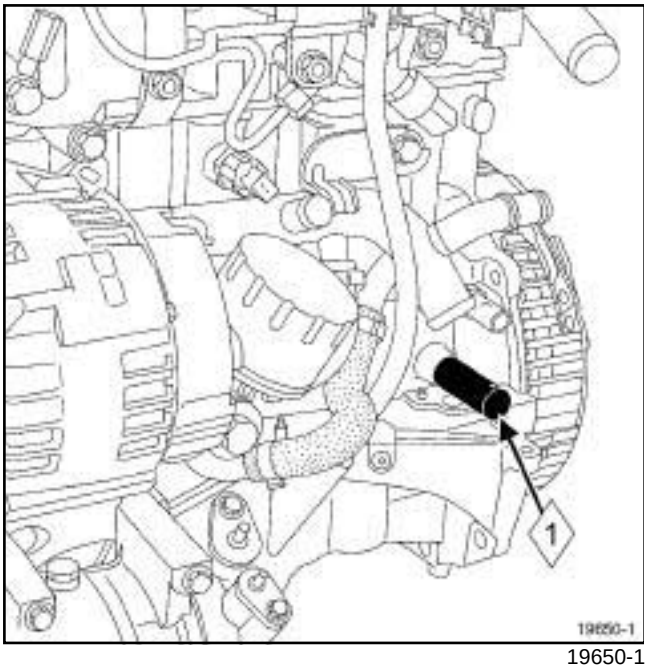

19650-1

❑ Screw in the TDC setting pin (**1**) **(Mot. 1489)**.

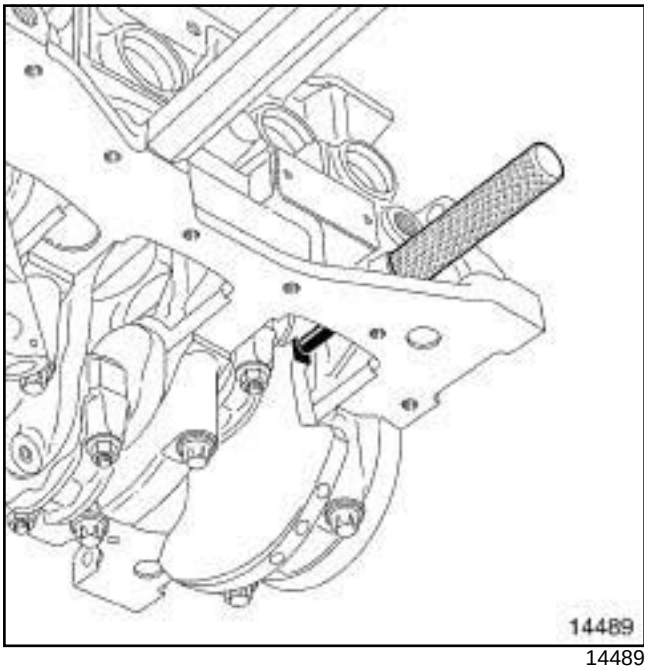

14489

❑ Turn the crankshaft clockwise (timing end) smoothly until the crankshaft comes in contact with the TDC setting pin.

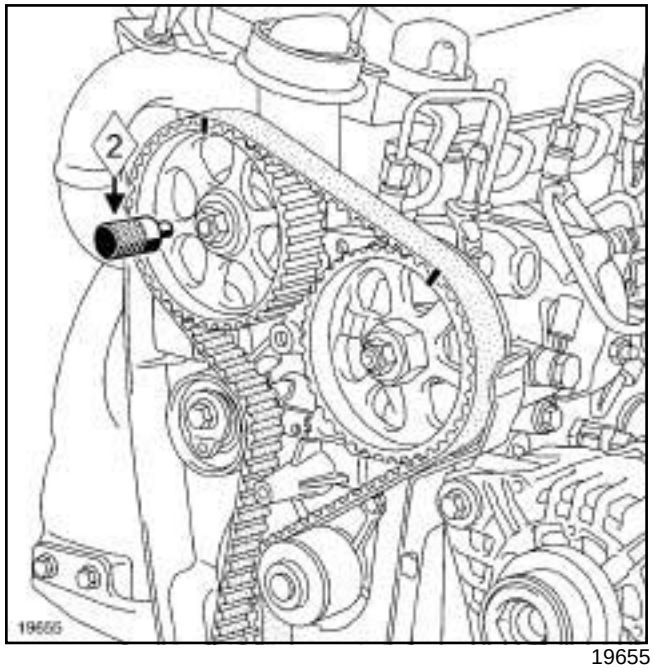

19655

❑ Engage the pin (**2**) **(Mot. 1430)** in the camshaft timing sprocket and cylinder head holes.

❑ Remove:

- the camshaft timing sprocket setting pin **(Mot. 1430)**,
- the TDC setting pin **(Mot. 1489)**.

K9K, and 722 or 724 or 728 or 729

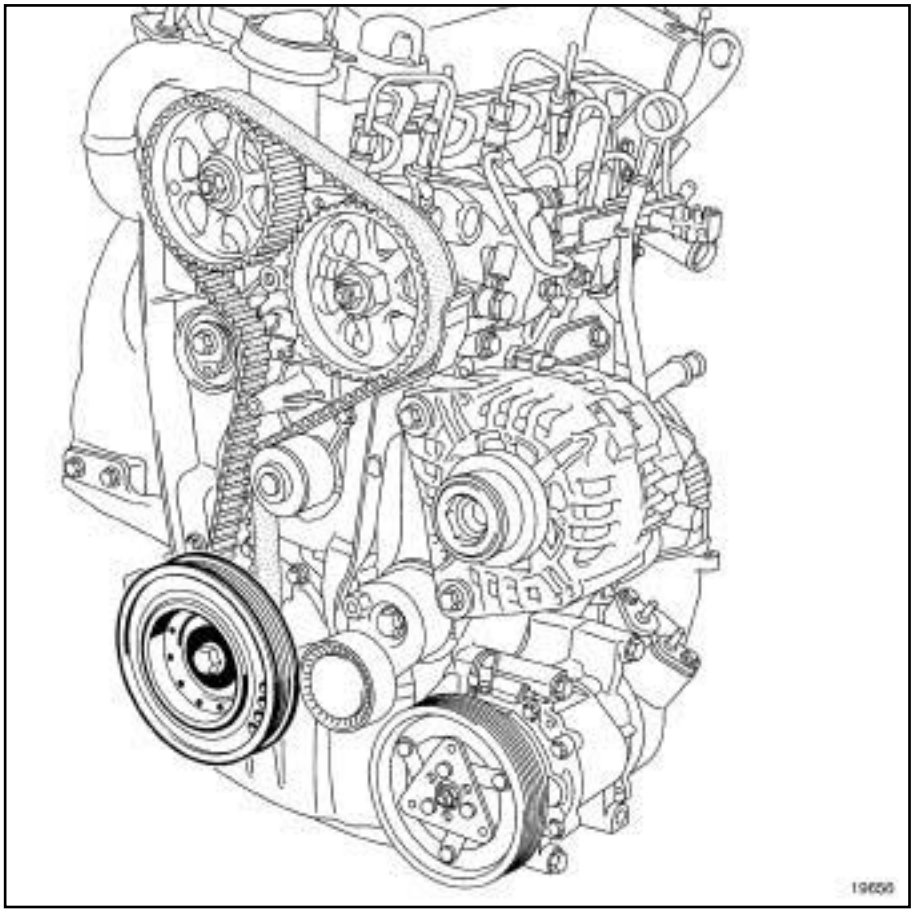

19656

❑ Remove the crankshaft accessories pulley by locking the flywheel using a large flat-blade screwdriver (either via a window at the back of the gearbox, or under the starter, depending on the gearbox type).

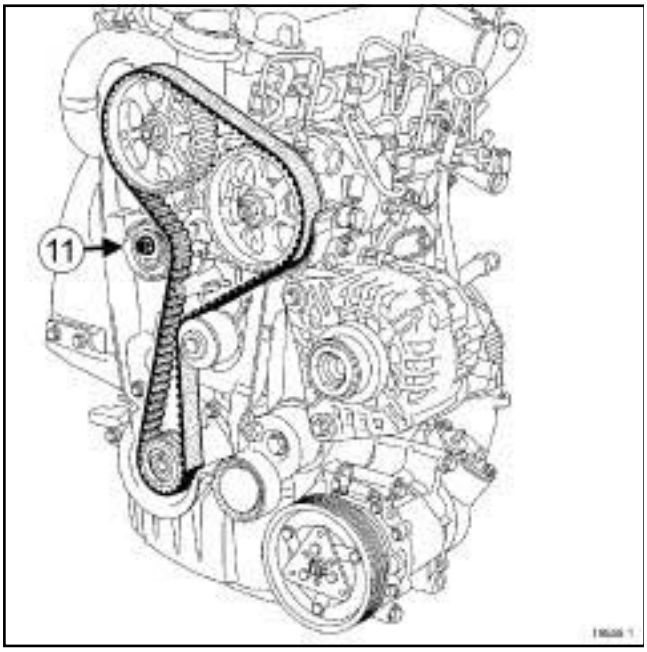

19656-1

❑ Slacken the tensioning roller bolt (**11**) .

❑ Loosen the timing tension wheel by turning the eccentric using a **6 mm hexagonal socket**.

❑ Remove:

- the timing belt taking care not to let the crankshaft timing sprocket fall out,
- the timing tensioning roller,
- the timing sprocket.

IV - SECOND FITTING

Recommendations for repair

❑

Note:

This procedure is applicable to engines manufactured from 02/12/2005 fitted with a two-part camshaft timing sprocket and a crankshaft timing sprocket with collet.

K9K, and 722 or 724 or 728 or 729

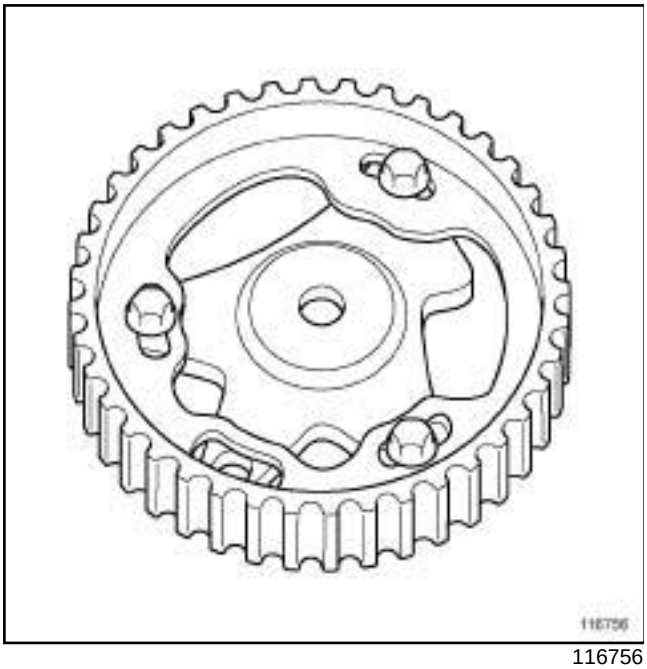

116756

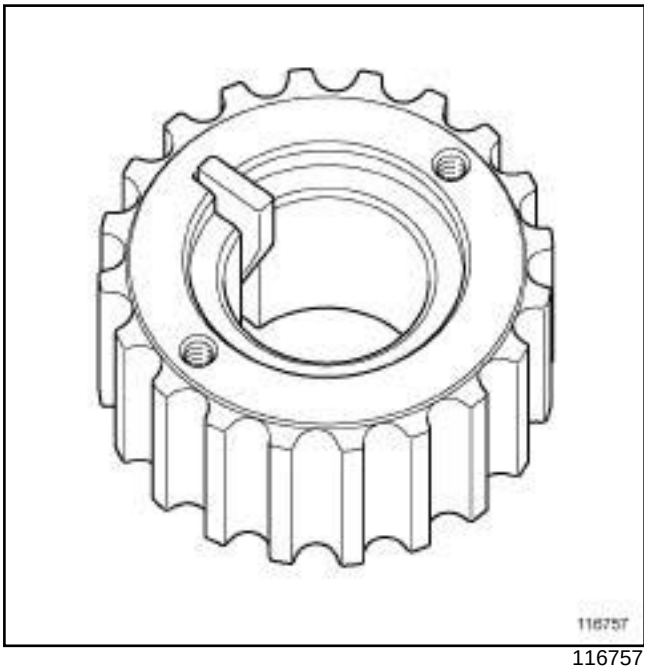

116757

❑ Wear **protective gloves** during the operation.

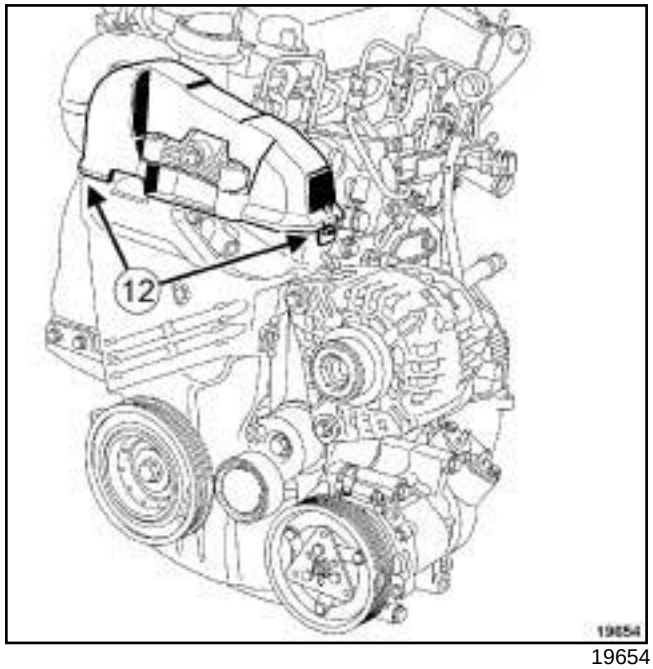

19654

❑ Remove the upper timing cover by unclipping both tabs (**12**) .

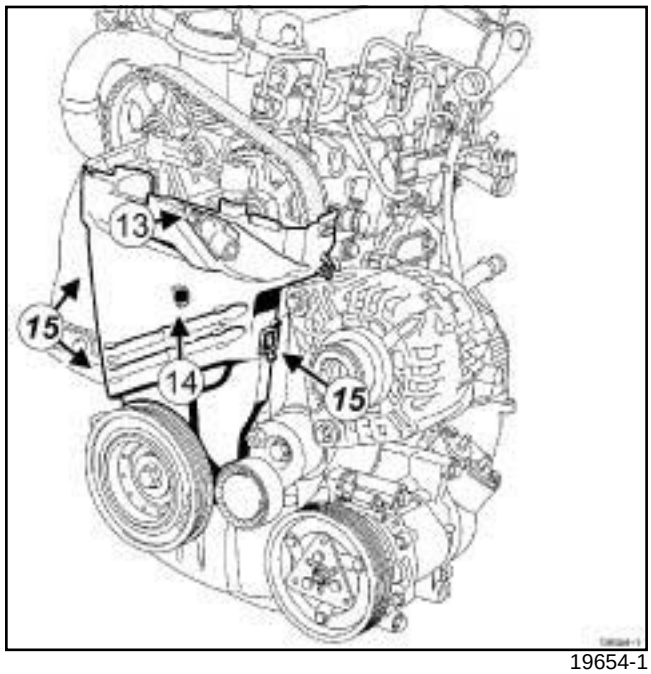

19654-1

❑ Remove:

- the camshaft position sensor (**13**) ,
- the plastic bolt (**14**) .

❑ Unclip the three tabs (**15**) .

❑ Remove the lower timing cover.

K9K, and 722 or 724 or 728 or 729

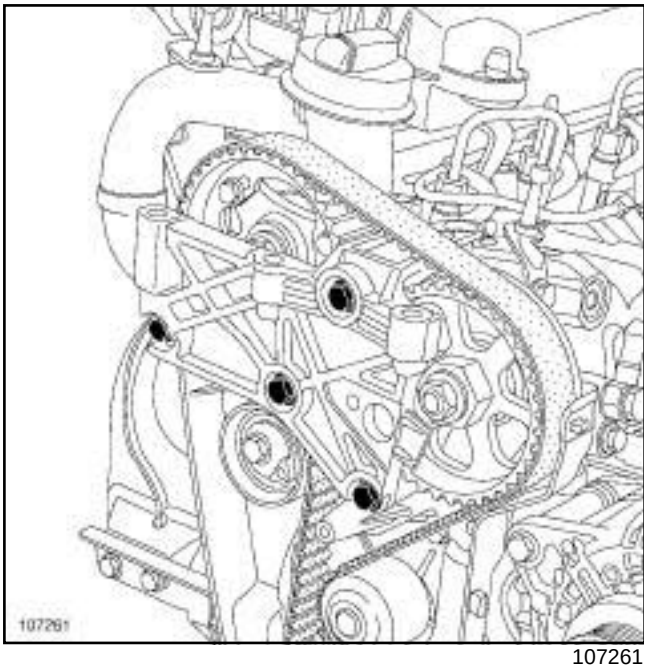

107261

❑ Remove the cylinder head suspended mounting .

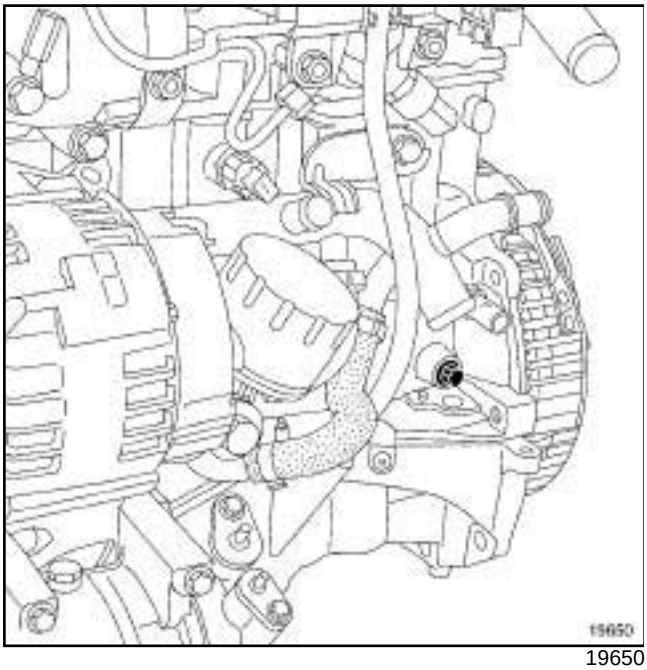

19650

❑ Remove the TDC pin plug using a **1/2" female torx socket (12.7 mm square drive) (14)**.

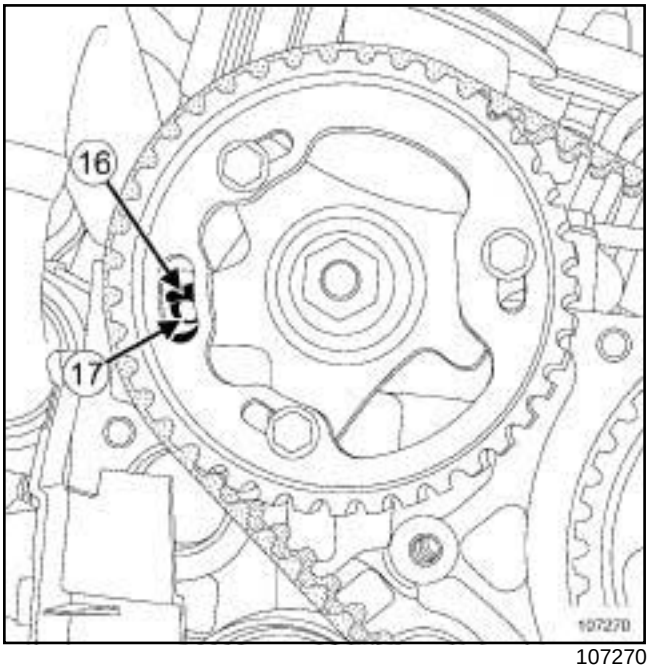

107270

❑ Rotate the crankshaft clockwise (timing end) to position the hole (**16**) in the camshaft timing sprocket almost opposite the hole (**17**) in the cylinder head.

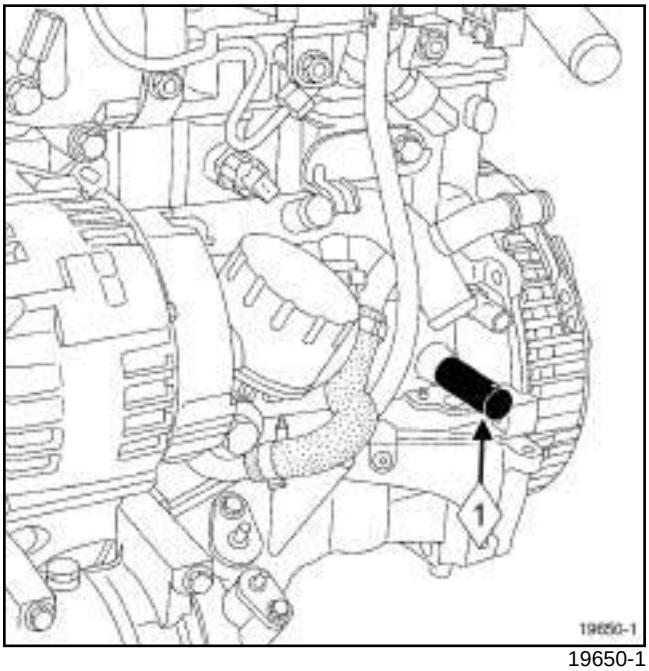

19650-1

❑ Screw in the TDC setting pin (**1**) **(Mot. 1489)**.

K9K, and 722 or 724 or 728 or 729

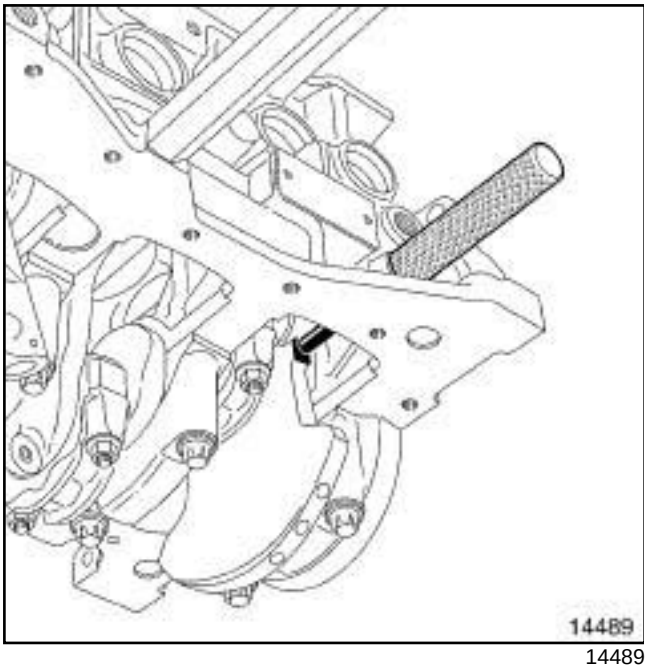

14489

❑ Turn the crankshaft clockwise (timing end) smoothly until the crankshaft comes in contact with the TDC setting pin.

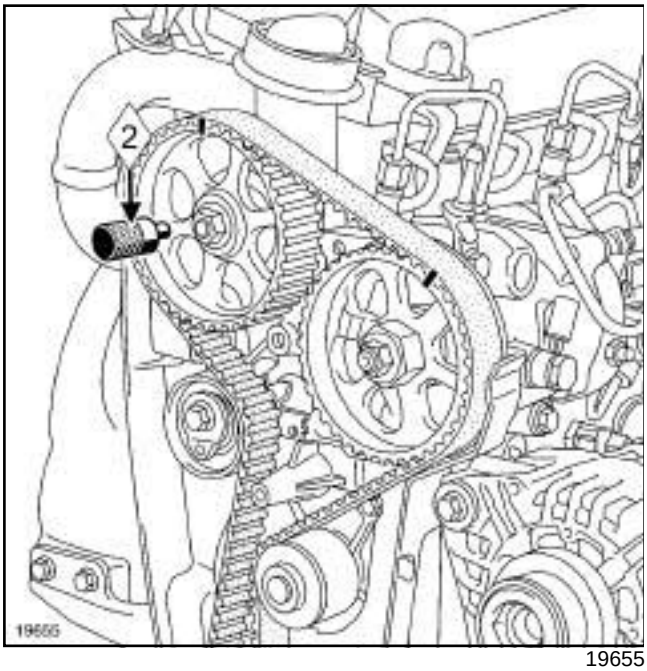

19655

❑ Engage the pin (**2**) **(Mot. 1430)** in the camshaft timing sprocket and cylinder head holes.

❑ Remove:

- the camshaft timing sprocket setting pin **(Mot. 1430)**,
- the TDC setting pin **(Mot. 1489)**.

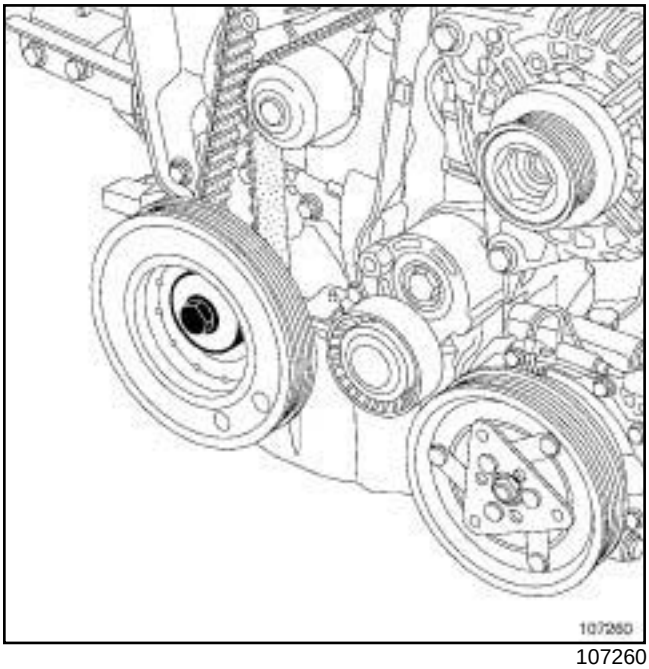

107260

❑ Remove the crankshaft accessories pulley by locking the flywheel using a large flat-blade screwdriver (either via a window at the back of the gearbox, or under the starter, depending on the gearbox type).

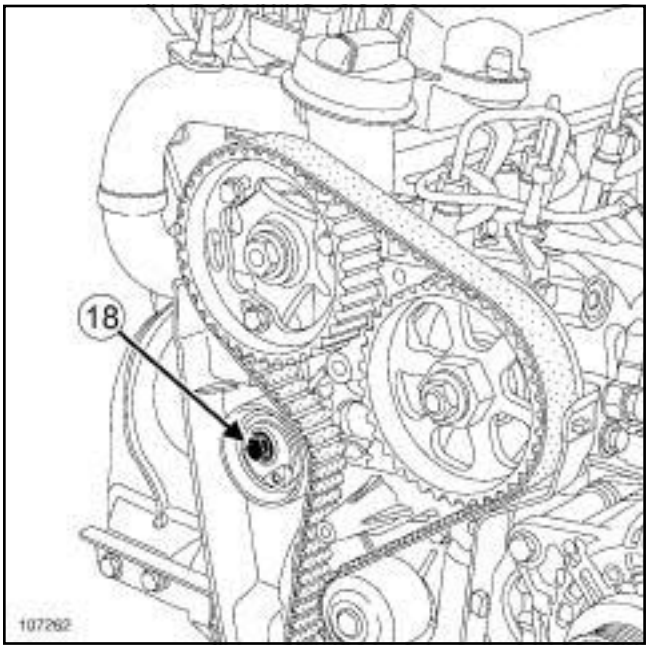

107262

❑ Slacken the tensioning roller bolt (**18**) .

❑ Loosen the timing tension wheel by turning the eccentric using a **6 mm hexagonal socket**.

❑ Remove:

- the timing belt taking care not to let the crankshaft timing sprocket fall out,
- the timing tensioning roller,

- the timing sprocket.

REFITTING

❑ **parts always to be replaced: Timing belt (10,02, 04,02)**

parts always to be replaced: Timing belt tensioning roller (10,02,04,04)

❑ Check:

- that there is no oil leak from the camshaft and crankshaft seals,
- the condition of the coolant pump (hard seal, play in shaft, fluid leak, shaft rotation) (see **Cooling system - Fault finding chart ALP 8**) (Technical Note 3175A, Cooling circuit fault finding, 19A, Cooling).

❑

> **WARNING**
> It is essential to remove the grease from the end of the crankshaft, the camshaft timing sprocket and the bearing face of the crankshaft accessories pulley. This is to avoid timing slippage.

I - REFITTING OPERATION FOR PART CONCERNED

❑

> Note:
> There are two types of timing belt assembly.

II - FIRST FITTING

1 - Recommendations for repair

❑

> Note:
> This procedure is applicable to engines manufactured up to 02/12/2005 fitted with a single unit or two-part camshaft timing sprocket and a crankshaft timing sprocket without collet.

K9K, and 722 or 724 or 728 or 729

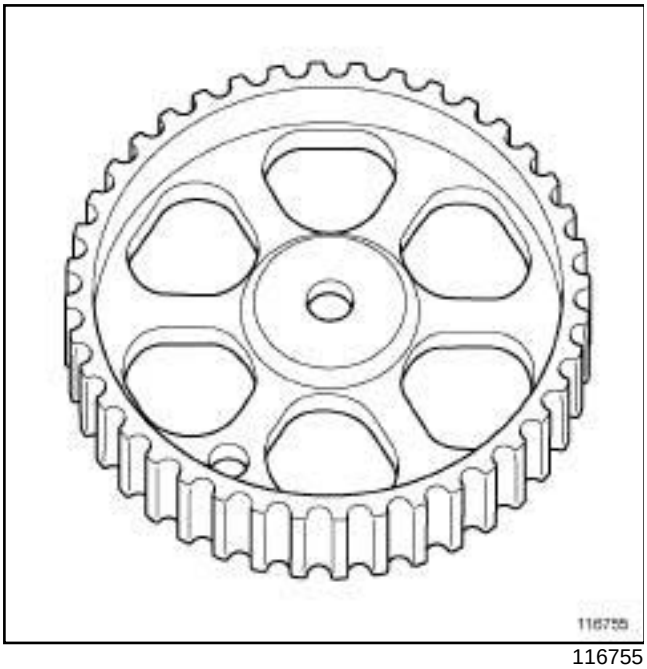

116755

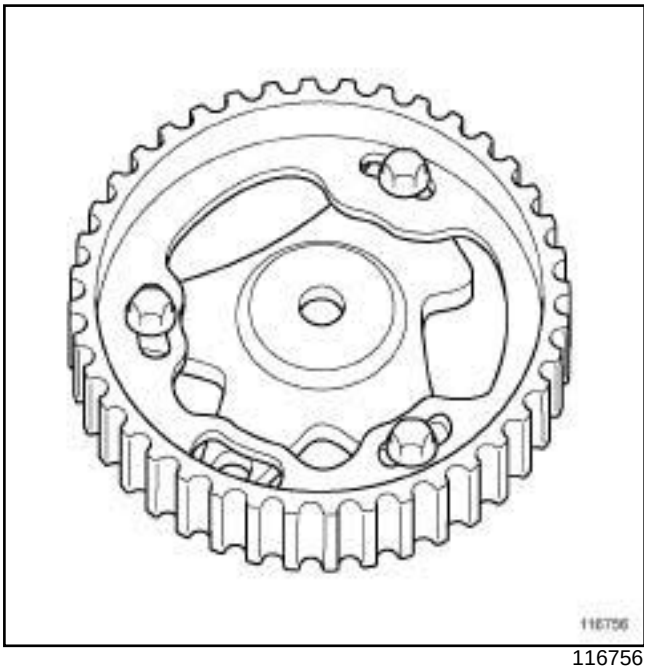

116756

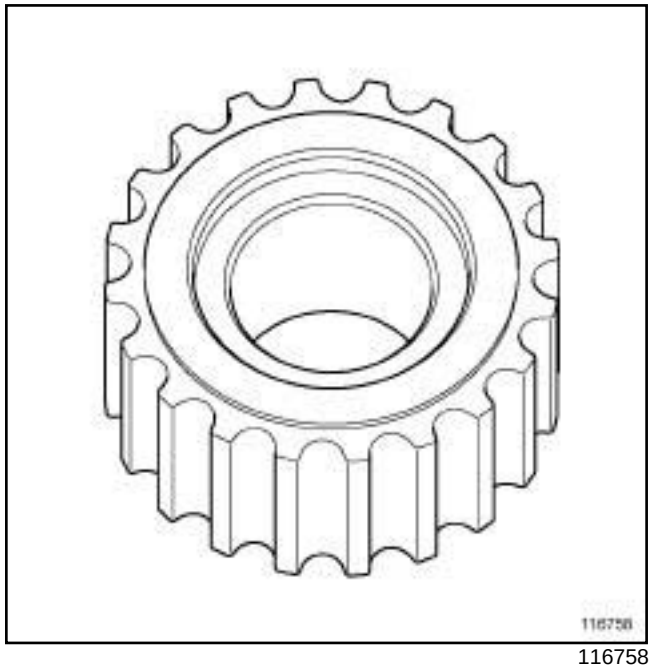

116758

❑ Wear **protective gloves** during the operation.

K9K, and 722 or 724 or 728 or 729

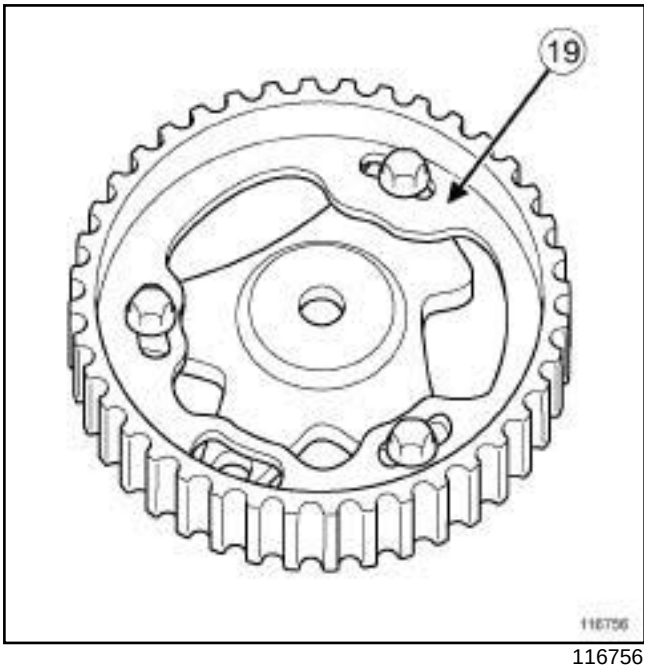

116756

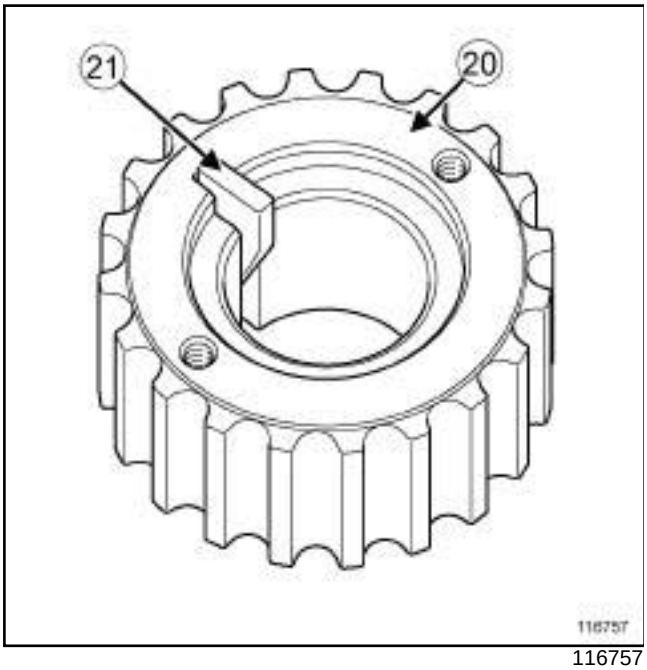

116757

❑ In the event of replacement:

- of a camshaft timing sprocket, the Parts Department will only supply a two-part camshaft timing sprocket (**19**) ,
- of a crankshaft timing sprocket, the Parts Department will only supply a crankshaft timing sprocket with collet (**20**) .

❑ Before refitting the crankshaft timing sprocket; it is essential to remove the crankshaft timing sprocket collet (**21**) .

❑ Place the crankshaft timing sprocket on a wooden stand to avoid damaging its teeth.

❑ When extracting the crankshaft timing sprocket collet, take care not to mark the crankshaft timing sprocket bore.

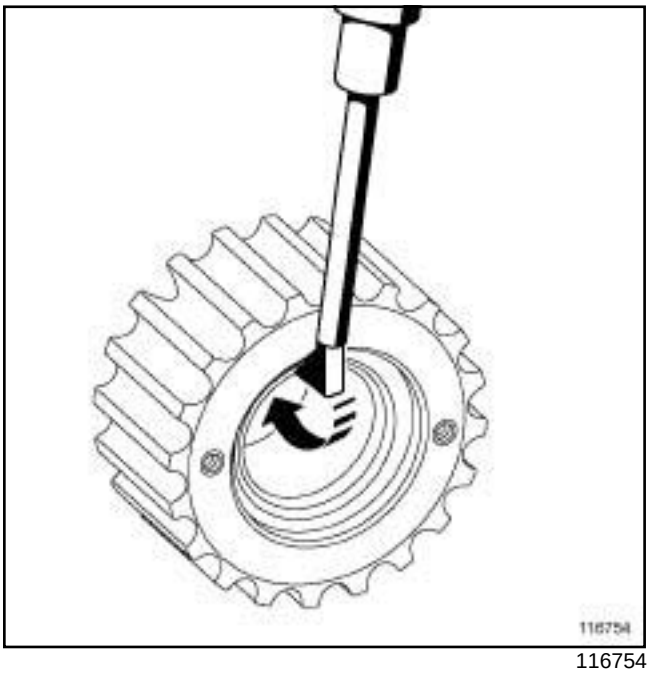

116754

❑ Pivot the collet towards the interior of the crankshaft timing sprocket using a **roll pin punch** with a diameter of **5 mm** and a mallet.

K9K, and 722 or 724 or 728 or 729

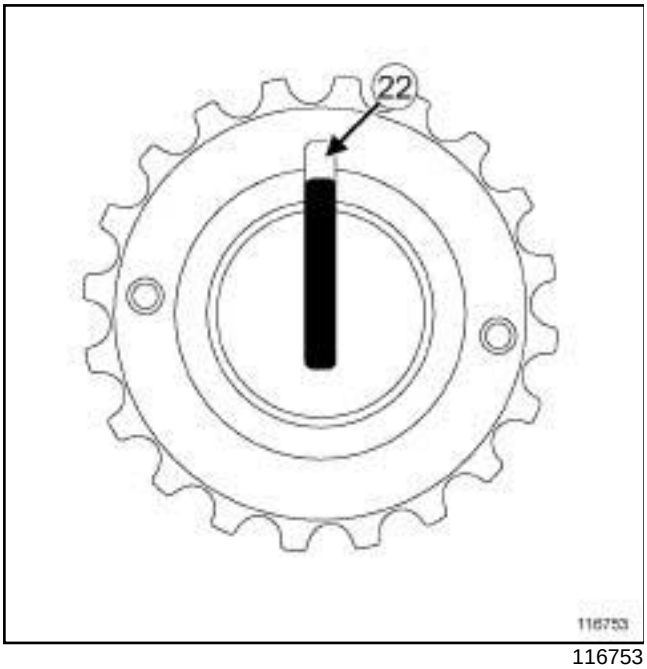

116753

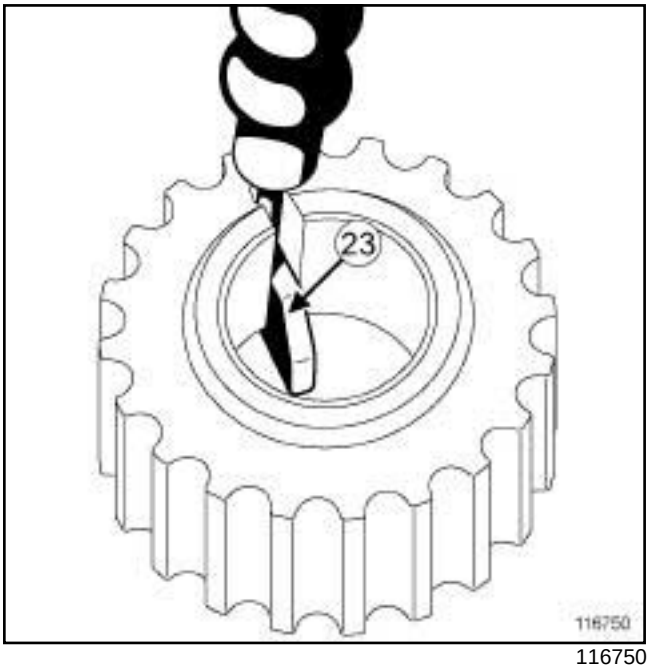

116750

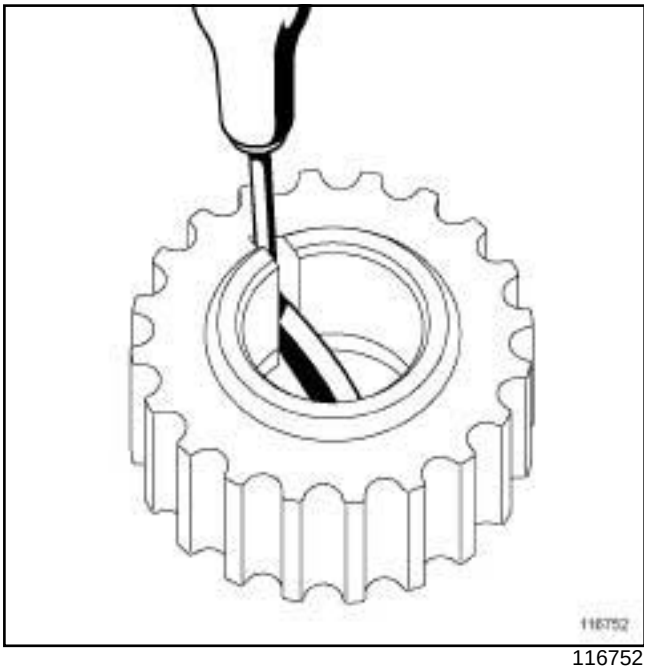

116752

- ❑ Slide a **roll pin punch** with a diameter of **3 mm** into the crankshaft timing sprocket groove (**22**) .

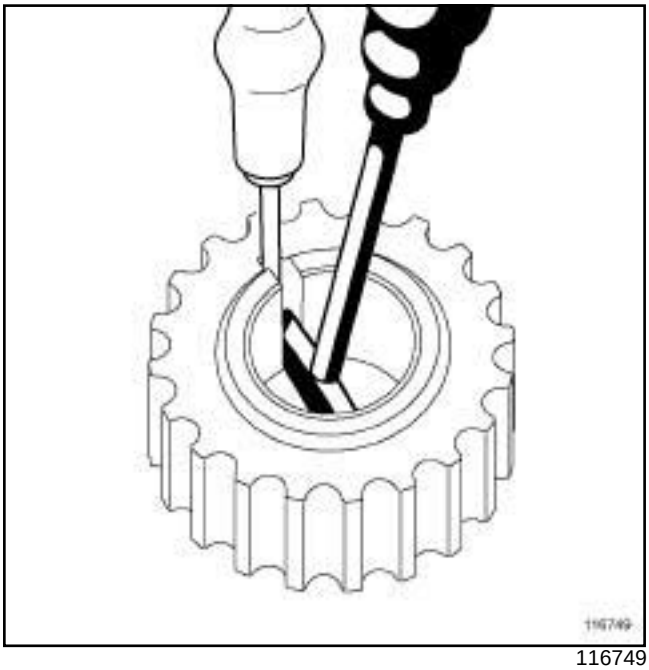

116749

- ❑ Position the **roll pin punch** with a diameter of **5 mm** at (**23**) on the collet.
- ❑ Pivot the collet to position it vertically.

K9K, and 722 or 724 or 728 or 729

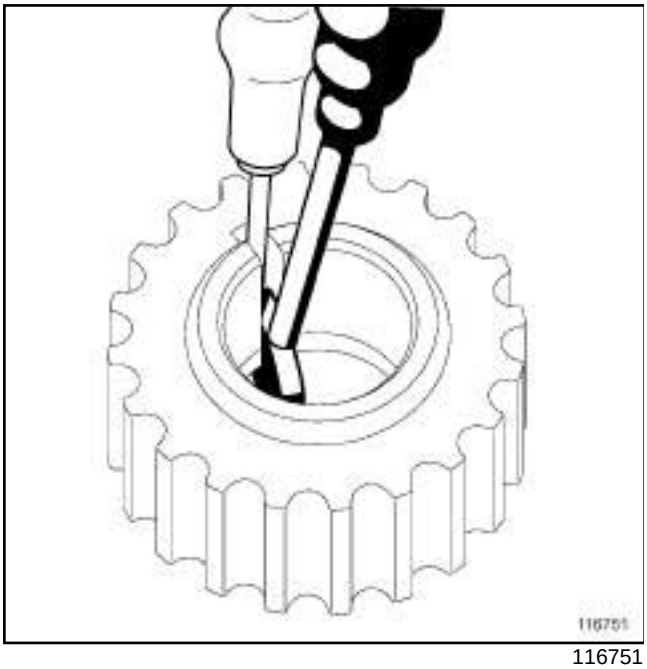

116751

❑ Extract the crankshaft timing sprocket collet using a **roll pin punch** and a mallet.

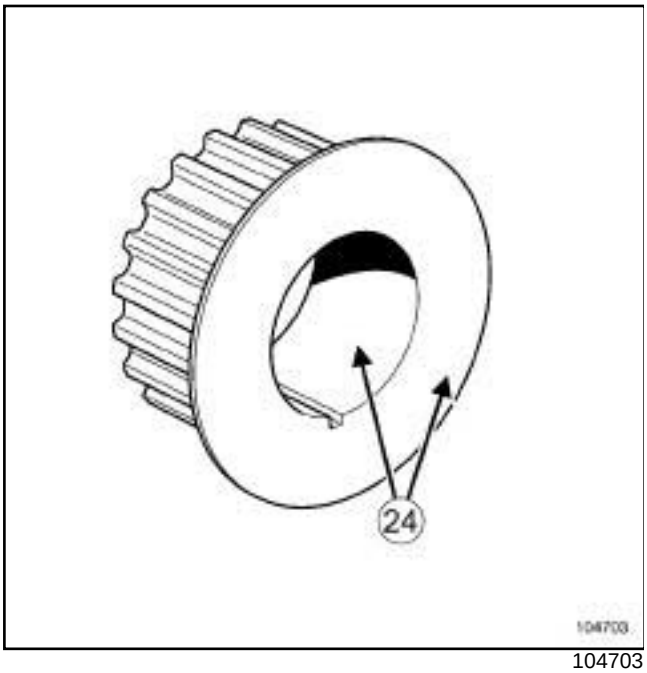

104703

❑ Use surface cleaner to degrease:

- the end of the crankshaft (timing end),
- the crankshaft timing sprocket bore and pressure faces at (**24**) ,
- the contact surfaces of the crankshaft accessories pulley.

K9K, and 722 or 724 or 728 or 729

2 - Timing belt fitting procedure for engines fitted with a single unit camshaft timing sprocket

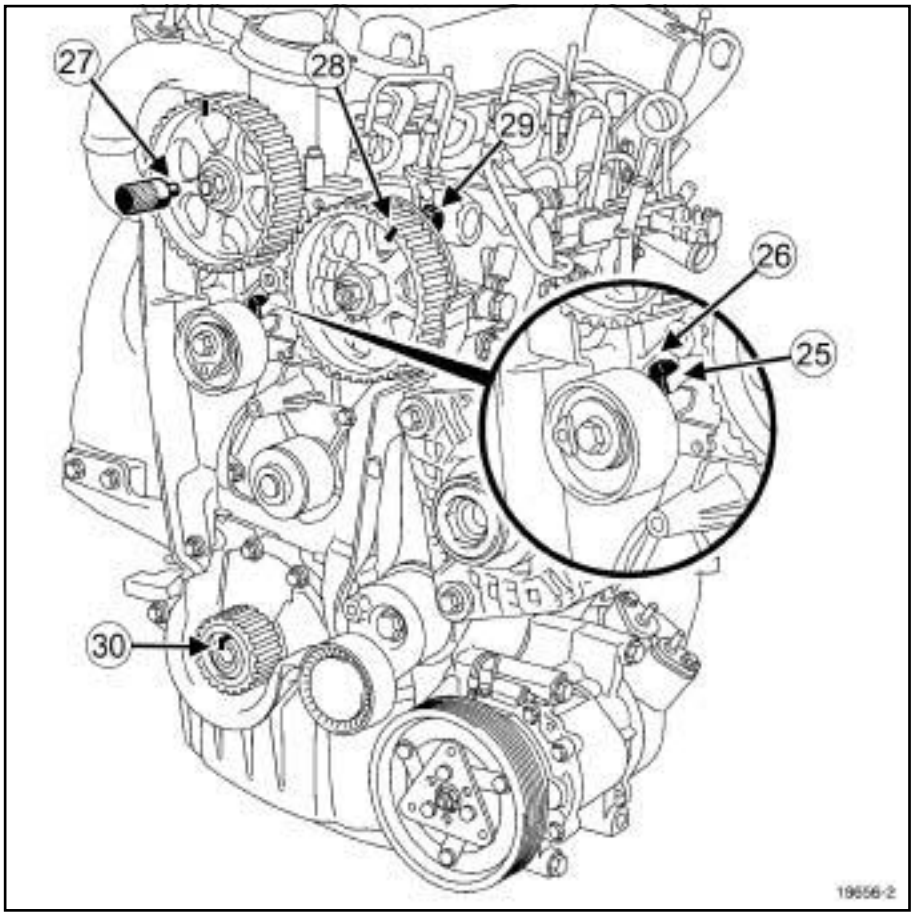

19656-2

- ❑ Refit:
  - the crankshaft timing sprocket,
  - the timing tensioning roller.
- ❑ Put the tensioning roller lug (**25**) in the cylinder head groove (**26**) .
- ❑ Engage the pin **(Mot. 1430)** in the camshaft timing sprocket and cylinder head holes at (**27**) , turning the camshaft using a **offset spanner (18 mm)** if necessary.
- ❑ Check that the mark on the high pressure pump pinion (**28**) is opposite the bolt head (**29**) .

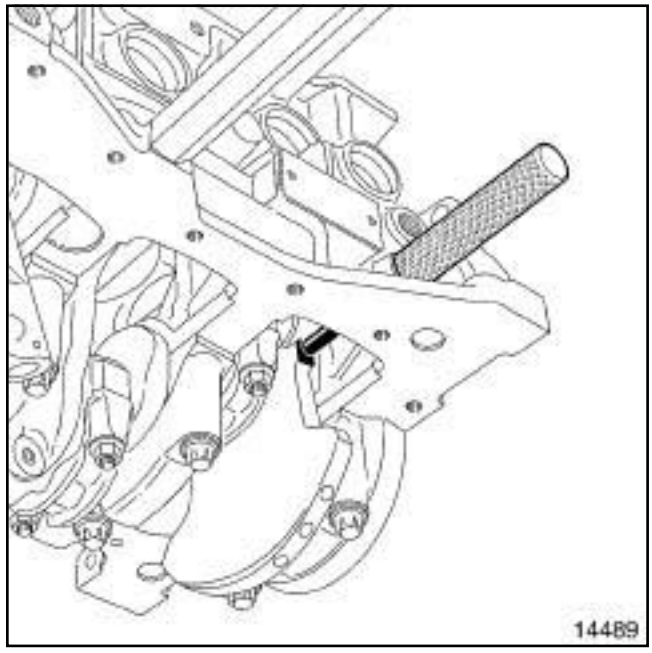

14489

- ❑ Position the crankshaft so that it presses against the TDC setting pin **(Mot. 1489)** (the crankshaft groove ***(30)*** must face upwards).

K9K, and 722 or 724 or 728 or 729

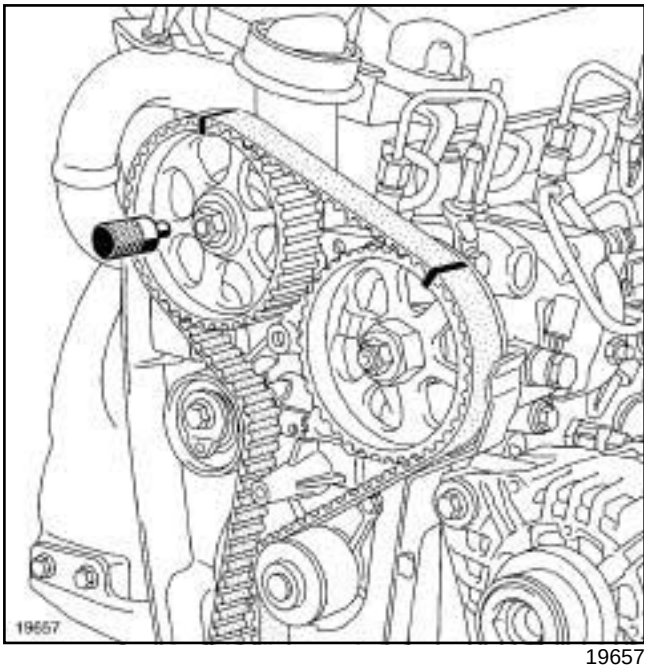

19657

❑ Fit the timing belt, starting with the crankshaft timing sprocket, by aligning the marks on the timing belt with those on the camshaft sprocket and the high pressure pump pinion.

> Note:
>
> There should be 19 timing belt tooth spaces between the marks on the camshaft sprocket and the high pressure pump pinion.

3 - Timing belt fitting procedure for engines fitted with a two-part camshaft timing sprocket

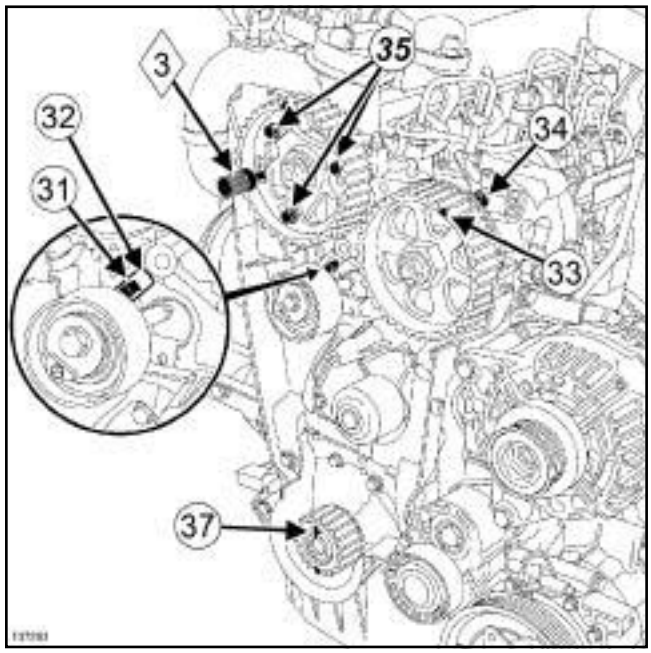

107263

❑ Refit the timing tensioning roller.

❑ Put the tensioning roller lug (**31**) in the cylinder head groove (**32**) .

❑ Engage the pin (**3**) **(Mot. 1430)** in the camshaft timing sprocket and cylinder head holes, turning the camshaft using a **offset spanner (18 mm)** if necessary.

❑ Check that the mark on the high pressure pump pinion (**33**) is opposite the bolt head (**34**) .

❑ Loosen the three camshaft timing sprocket crown bolts (**35**) by one turn.

K9K, and 722 or 724 or 728 or 729

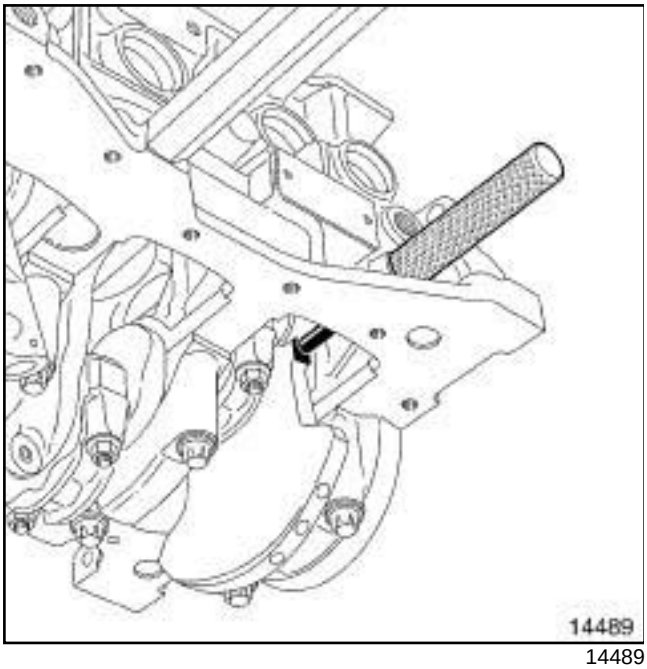

14489

❑ Position the crankshaft so that it presses against the TDC setting pin **(Mot. 1489)** (the crankshaft groove ***(37)*** must face upwards).

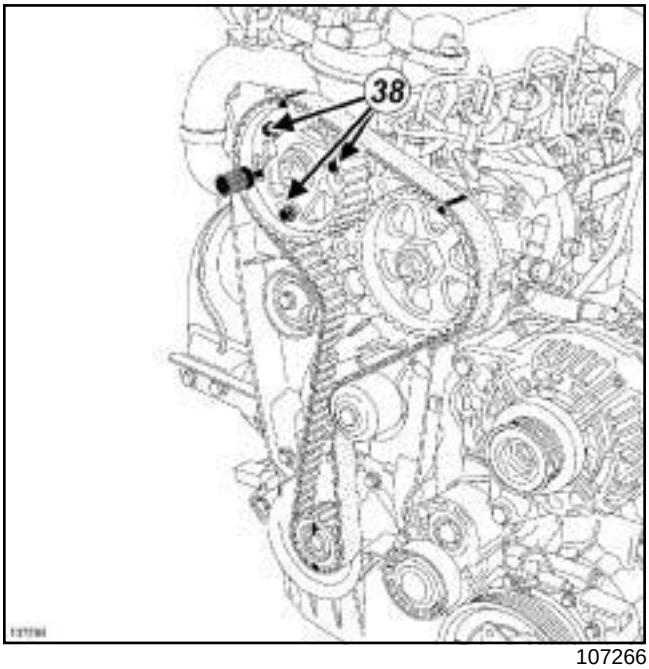

107266

❑ Fit the timing belt, starting with the crankshaft timing sprocket, by aligning the marks on the timing belt with those on the camshaft sprocket and the high pressure pump pinion.

> Note:
>
> There should be 19 timing belt tooth spaces between the marks on the camshaft sprocket and the high pressure pump pinion.

❑ Use a **torque wrench** to torque tighten the **camshaft timing sprocket crown bolts (14 N.m)** (**38**) .

K9K, and 722 or 724 or 728 or 729

4 - Second part of the timing procedure for engines fitted with a single unit or two-part camshaft timing sprocket

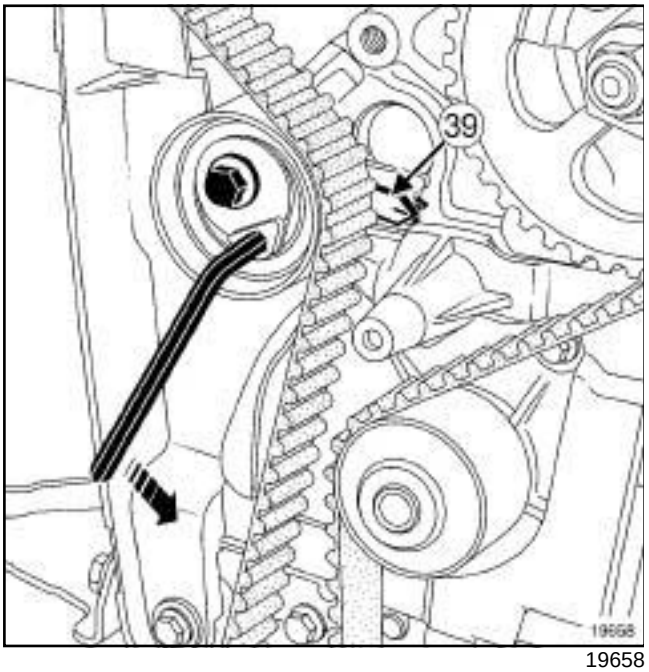

19658

- Position the tensioning roller adjustable index marker (**39**) opposite the lug **, turning the eccentric cam anti-clockwise using a 6 mm** Allen key.
- Use a **torque wrench** to torque tighten the **tensioning roller bolt (27 N.m)**.
- Refit the accessories crankshaft pulley with a new bolt.
- Torque and angle tighten using a **angle torque wrench** or a **torque wrench** and a **cylinder head bolt tightening gauge (angular measuring type)** (crankshaft against the TDC setting pin):
  - the **crankshaft accessories pulley M12 bolt (60 N.m + 100° ± 10°)**,
  - the **crankshaft accessories pulley M14 bolt (120 N.m + 95° ± 15°)**
- Remove the following tools:
  - the camshaft timing sprocket setting pin **(Mot. 1430)**,
  - the TDC setting pin **(Mot. 1489)**.

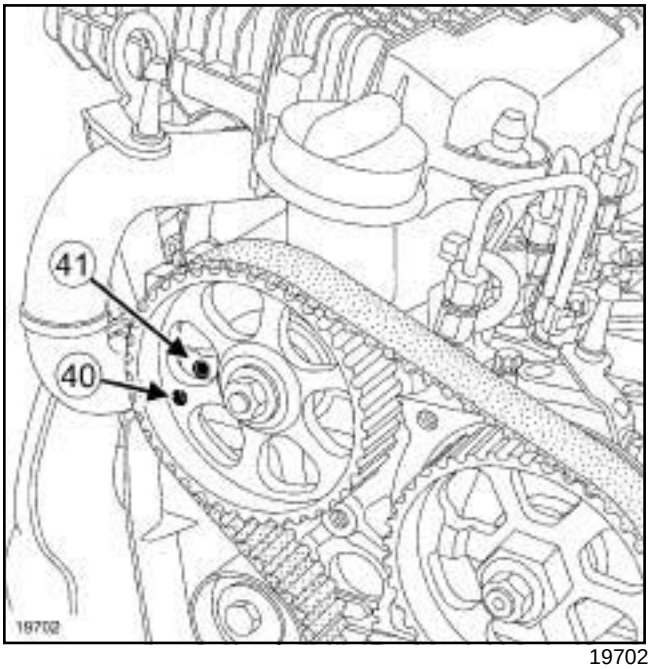

19702

- Rotate the crankshaft clockwise through two revolutions (timing end). Before the hole (**40**) in the camshaft timing sprocket is opposite the hole (**41**) in the cylinder head:
  - screw the TDC setting pin **(Mot. 1489)** into the cylinder block,
  - bring the crankshaft slowly and smoothly against the TDC setting pin.

K9K, and 722 or 724 or 728 or 729

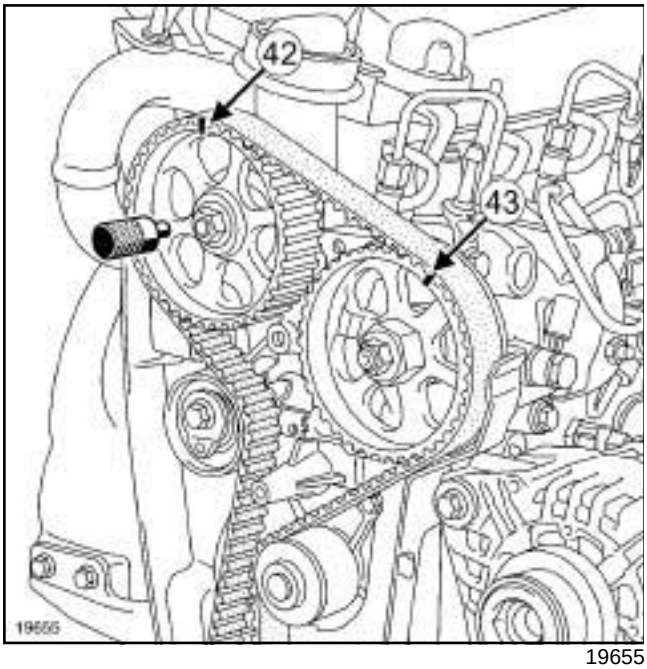

19655

❑ Lock the camshaft timing sprocket using the **(Mot. 1430)**.

> Note:
>
> There should be 19 timing belt tooth grooves between the marks on the camshaft sprocket (**42**) and the high pressure pump pinion (**43**)

❑ Remove:

- the TDC setting pin **(Mot. 1489)**,
- the camshaft timing sprocket setting pin **(Mot. 1430)**.

> Note:
>
> After two turns, the tension wheel index markers may be in two different positions.
>
> The rotation of the tension wheel eccentric depends on the position.

First position

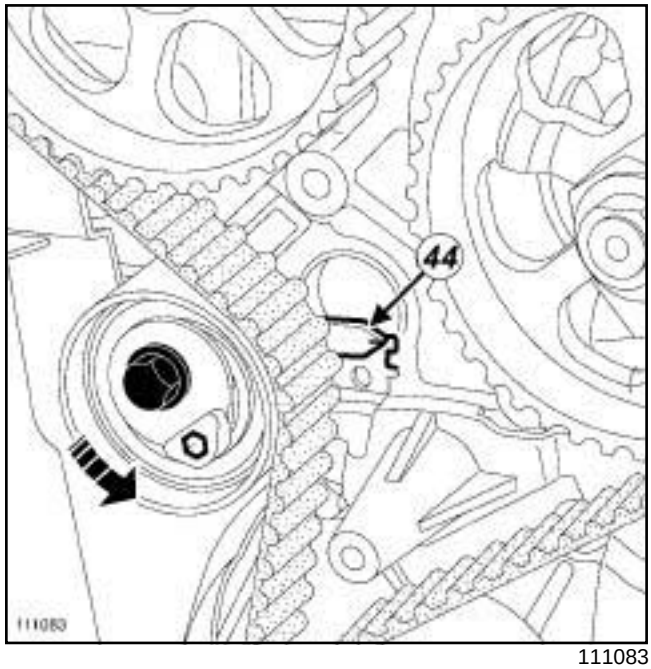

111083

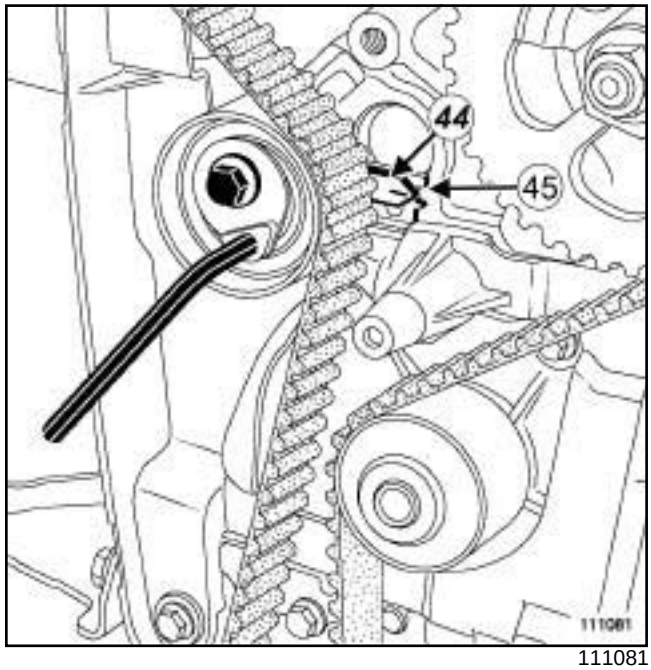

111081

❑ Loosen the tensioning roller bolt by no more than one turn, holding it with a **6 mm** Allen key.

❑ Gradually align the adjustable index (**44**) in the middle of the timing window (**45**) , **turning the key anti-clockwise**.

❑ Use a **torque wrench** to torque tighten the **tensioning roller bolt (27 N.m)**.

K9K, and 722 or 724 or 728 or 729

Second position

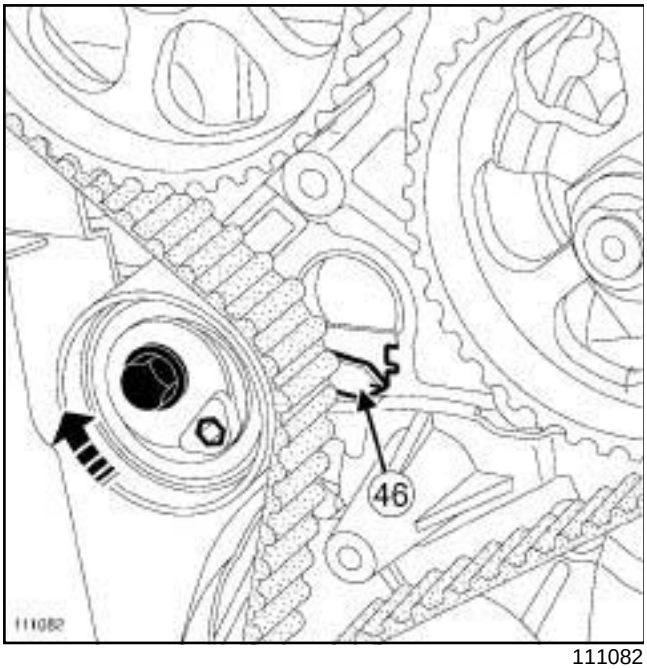

111082

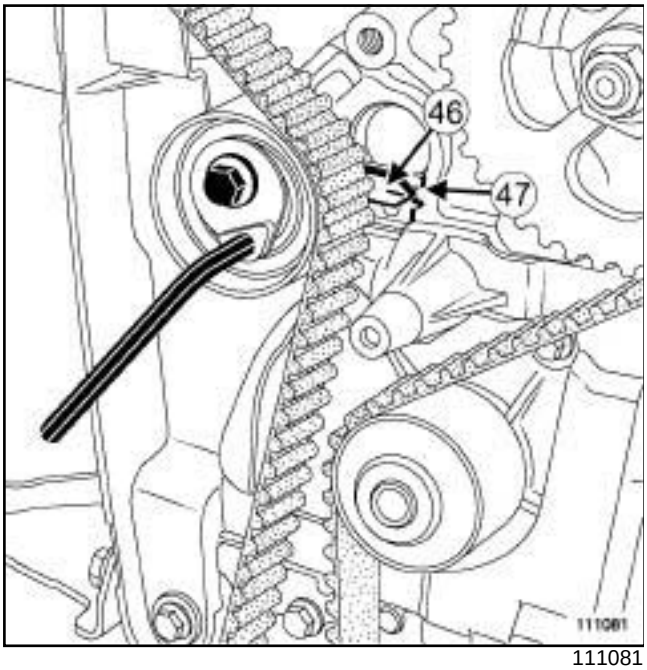

111081

- ❑ Loosen the tensioning roller bolt by no more than one turn, holding it with a **6 mm** Allen key.
- ❑ Gradually align the adjustable index (**46**) in the middle of the timing window (**47**) , **turning the key clockwise**.
- ❑ Use a **torque wrench** to torque tighten the **new tensioning roller bolt (27 N.m)**.
- ❑ Rotate the crankshaft clockwise through two revolutions (timing end). Before the hole in the camshaft timing sprocket is opposite the hole in the cylinder head:
  - screw the TDC setting pin **(Mot. 1489)** into the cylinder block,
  - bring the crankshaft slowly and smoothly against the TDC setting pin.

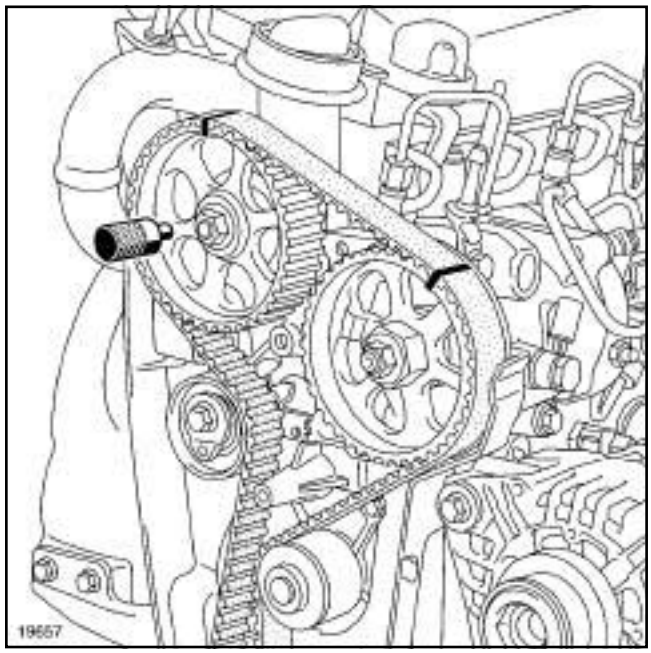

19657

- ❑ Lock the camshaft timing sprocket using the **(Mot. 1430)**.
- ❑ If the pin does not engage, repeat the timing belt refitting operation.
- ❑ Remove the following tools:
  - the TDC setting pin **(Mot. 1489)**,
  - the camshaft timing sprocket setting pin **(Mot. 1430)**
- ❑ Apply a drop of **SILICONE ADHESIVE SEALANT** to the threading of the TDC pin plug.
- ❑ Use a **torque wrench** to torque tighten the **TDC pin plug (25 N.m)**.

K9K, and 722 or 724 or 728 or 729

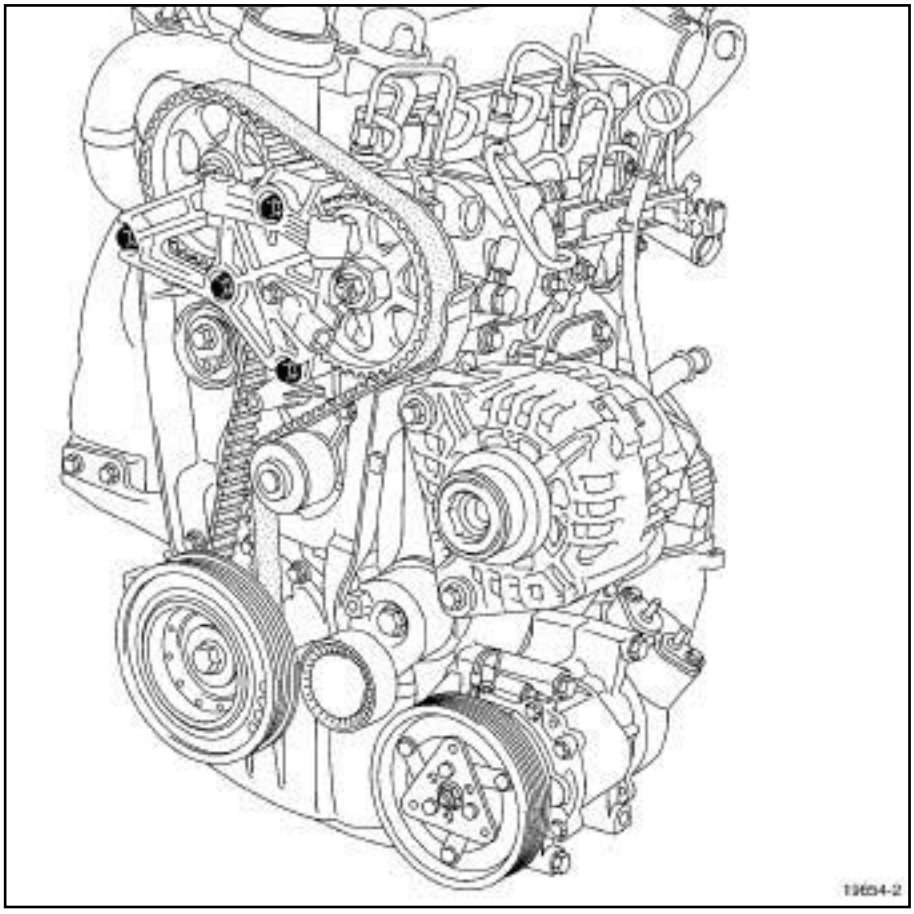

19654-2

- ❑ Refit the cylinder head suspended mounting.
- ❑ Use a **torque wrench** to torque tighten the **cylinder head suspended mounting bolts (25 N.m)**.

K9K, and 722 or 724 or 728 or 729

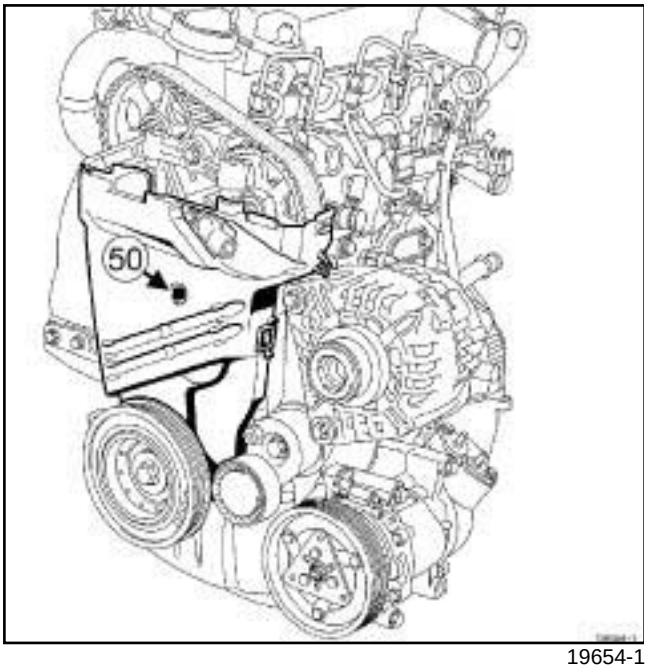

19654-1

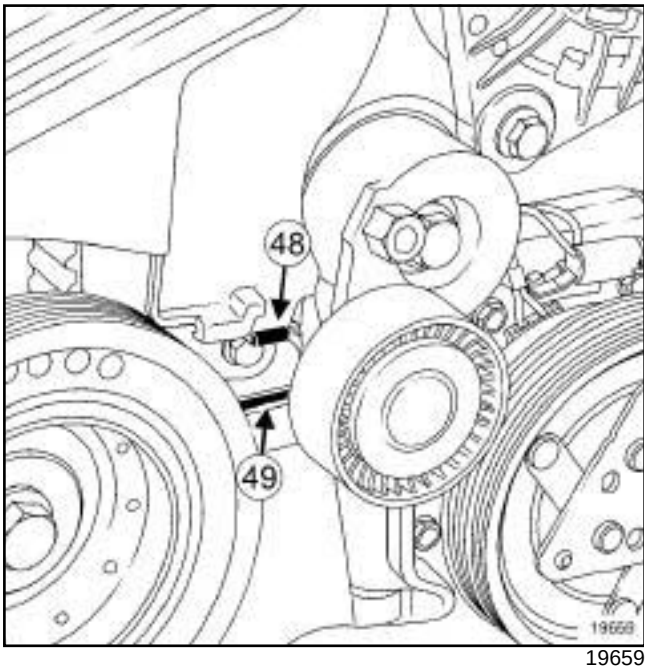

19659

❑ Refit:

- the timing cover, positioning the tab (**48**) in the inner timing cover hole (**49**) ,
- the timing cover plastic bolt (**50**) .

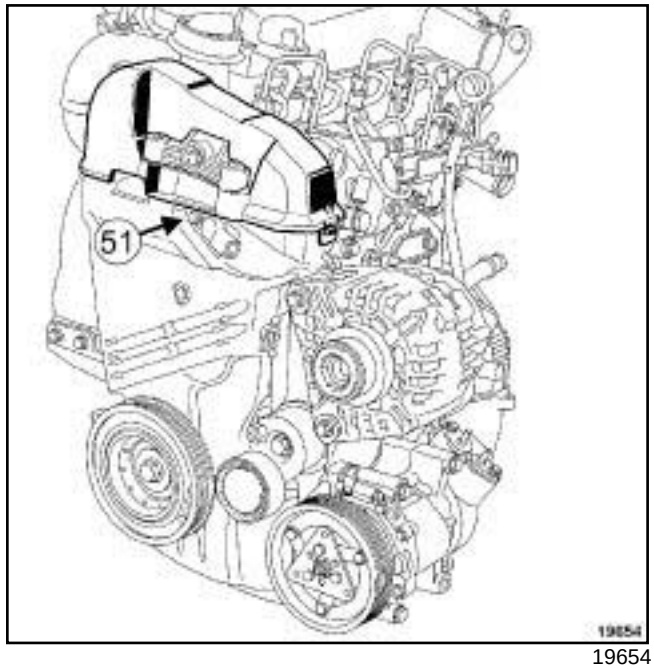

19654

❑ Refit the camshaft position sensor (**51**) .

❑ Use a **torque wrench** to torque tighten the **camshaft position sensor bolt (8 N.m)**.

❑ Refit the upper timing cover.

III - SECOND FITTING

Recommendations for repair

❑

> Note:
>
> This procedure is applicable to engines manufactured from 02/12/2005 fitted with a two-part camshaft timing sprocket and a crankshaft timing sprocket with collet.

K9K, and 722 or 724 or 728 or 729

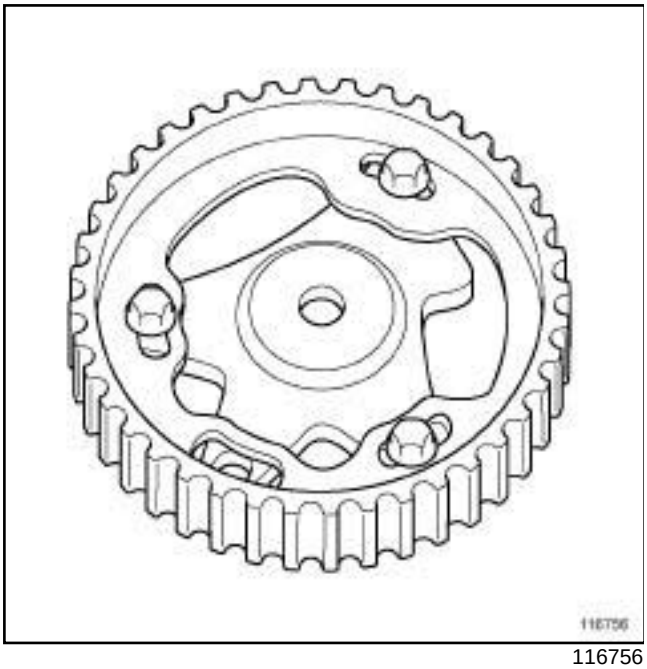

116756

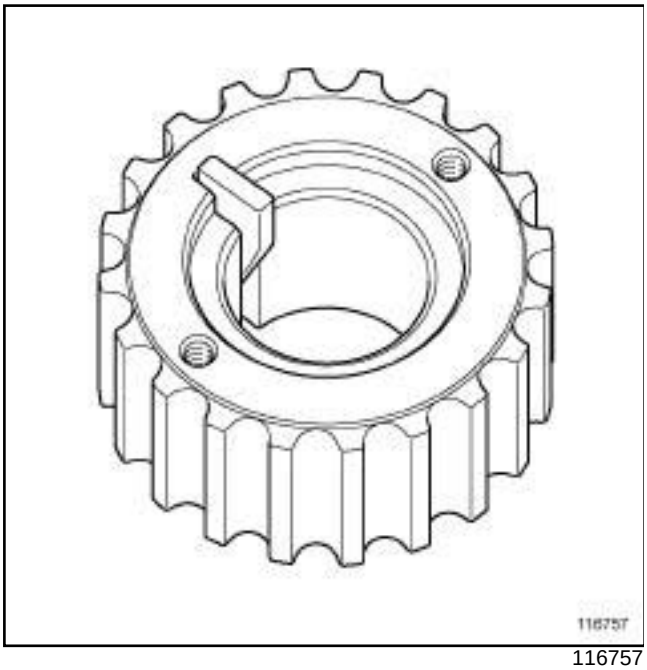

116757

❑ Wear **protective gloves** during the operation.

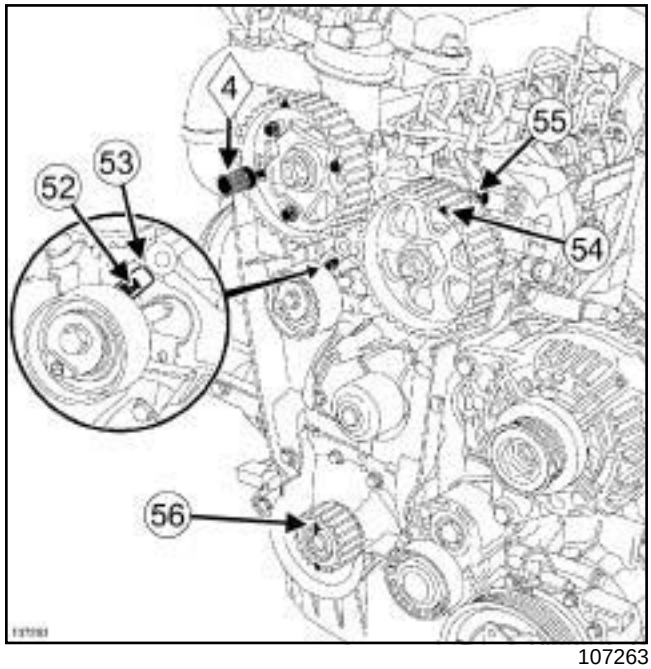

107263

❑ Refit the timing tensioning roller.

❑ Put the tensioning roller lug (**52**) in the cylinder head groove (**53**) .

❑ Engage the pin (**4**) **(Mot. 1430)** in the camshaft timing sprocket and cylinder head holes, turning the camshaft using a **offset spanner (18 mm)** if necessary.

❑ Check that the mark on the high pressure pump (**54**) is opposite the bolt head (**55**) .

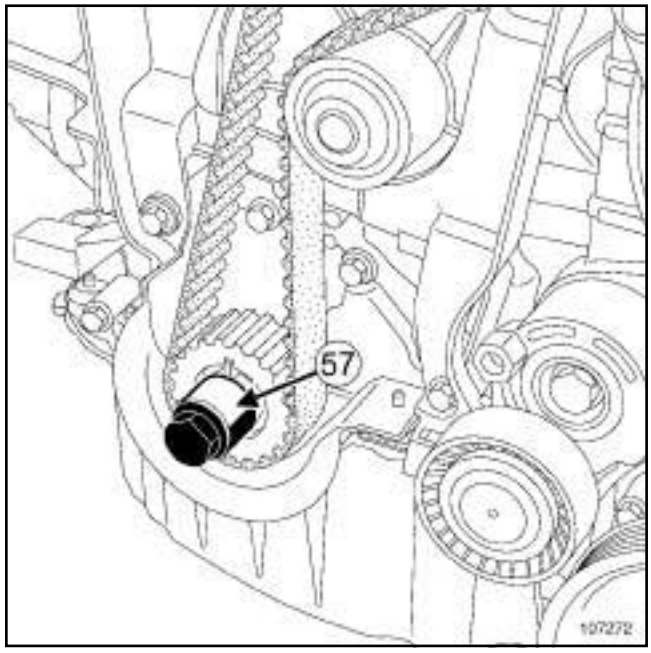

107272

❑ Tighten the old crankshaft accessories pulley bolt fitted with a spacer (which does not cover the timing sprocket mark) (**57**) onto the crankshaft.

K9K, and 722 or 724 or 728 or 729

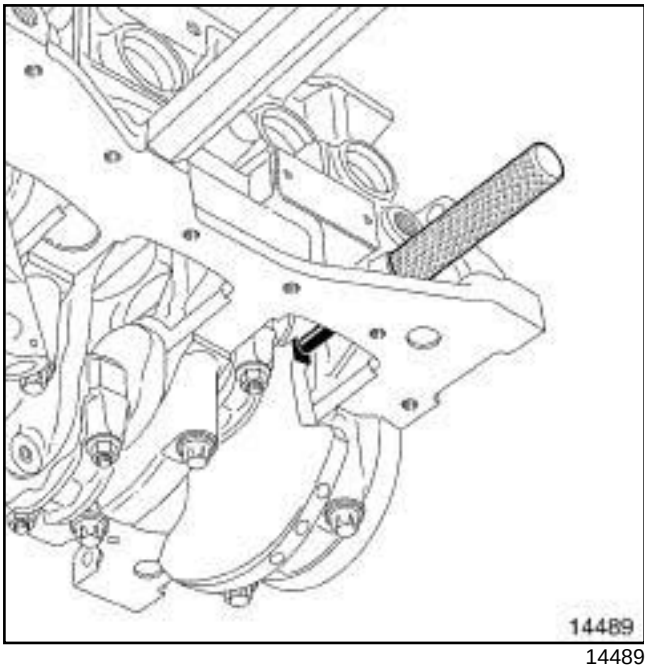

14489

❑ Position the crankshaft so that it presses against the TDC setting pin **(Mot. 1489)** (the crankshaft sprocket ***(56)*** collet must face upwards).

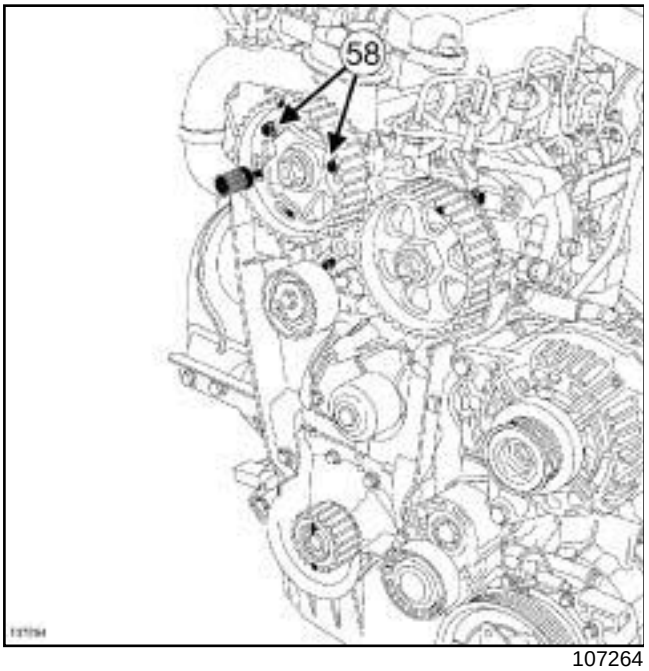

107264

❑ Remove one bolt from the camshaft timing sprocket crown.

❑ Loosen the other two camshaft timing sprocket crown bolts (**58**) by one turn.

K9K, and 722 or 724 or 728 or 729

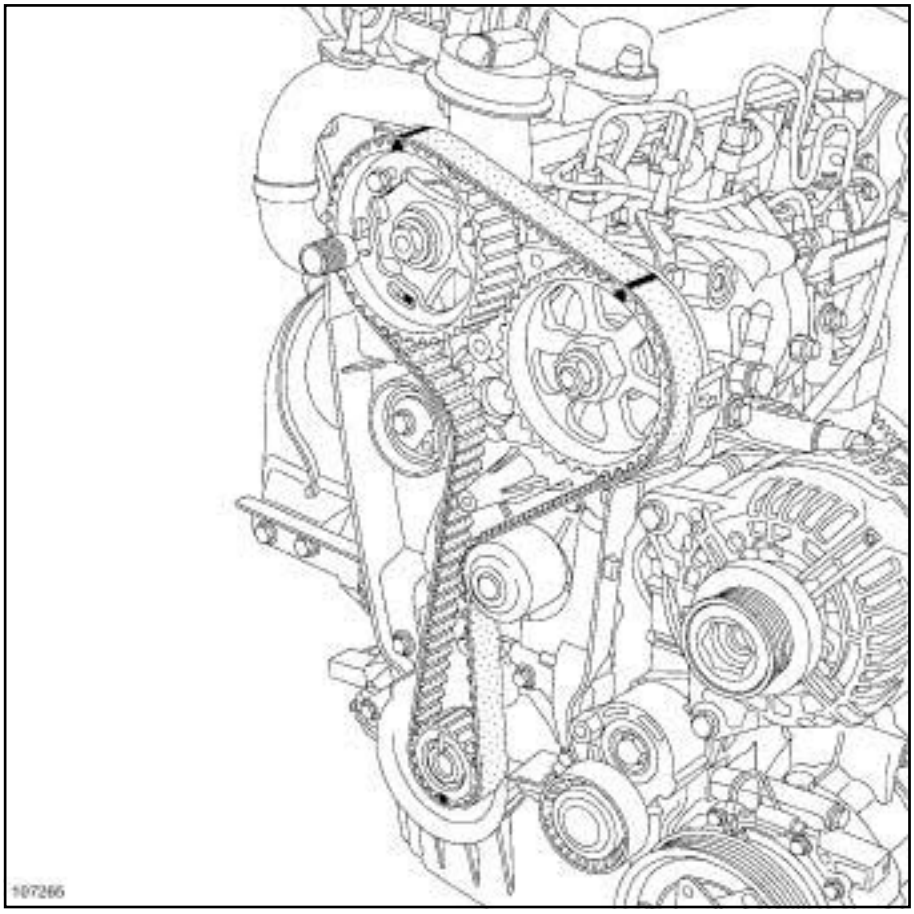

107265

- Fit the timing belt, starting with the crankshaft sprocket, by aligning the marks on the timing belt with those on the crankshaft sprockets and camshaft and high pressure pump pinions.

> Note:
>
> There should be 19 timing belt tooth grooves between the marks on the camshaft sprocket and the high pressure pump pinion, and 51 timing belt tooth grooves between the crankshaft sprocket and the high pressure pump pinion.

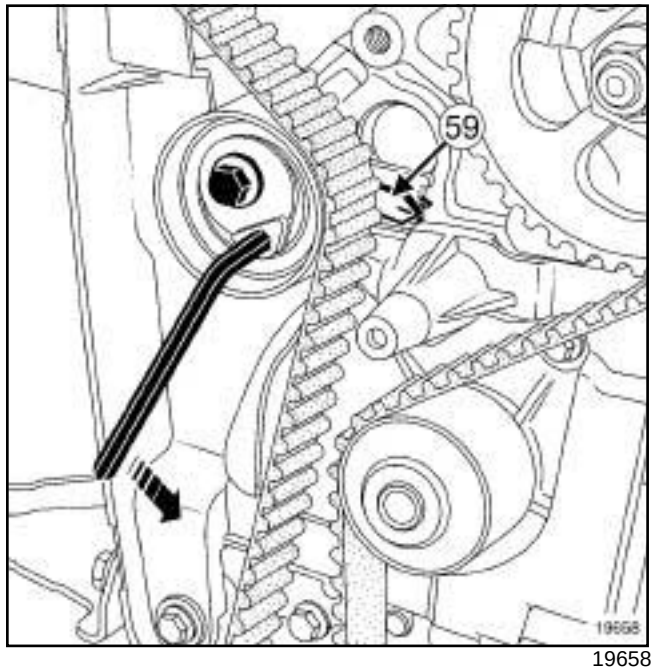

19658

- Position the tensioning roller adjustable index marker (**59**) opposite the lug **, turning the eccentric cam anti-clockwise using a 6 mm** Allen key.

K9K, and 722 or 724 or 728 or 729

- Use a **torque wrench** to torque tighten the **tensioning roller bolt (27 N.m)**.

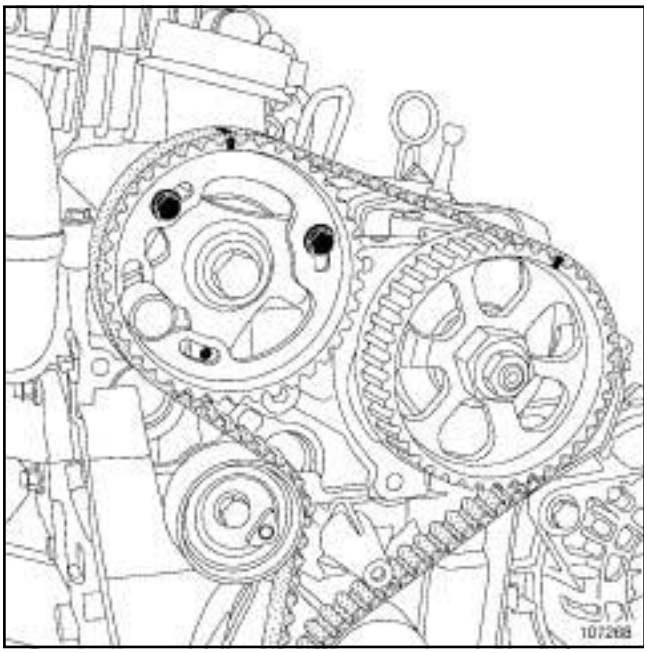

107268

- Check that the camshaft timing sprocket crown bolts are not fully locked against the camshaft timing sprocket crown. If they are, repeat the timing belt refitting procedure.

K9K, and 722 or 724 or 728 or 729

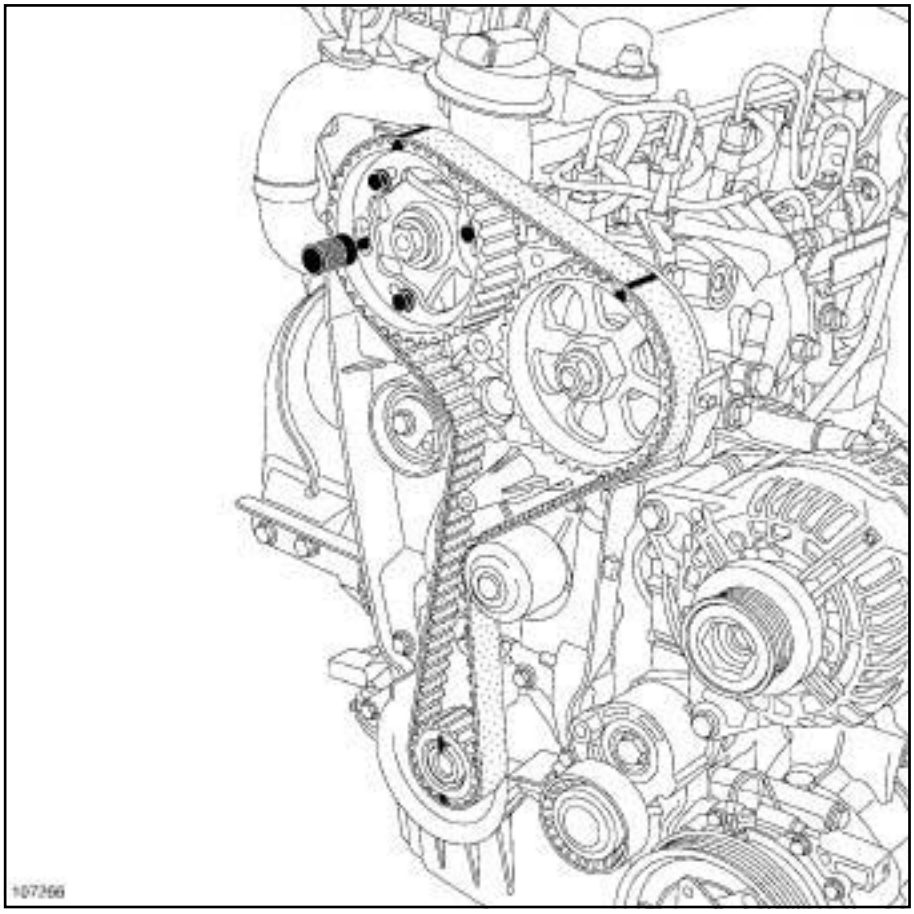

107266

- ❑ Refit the bolt from the camshaft timing sprocket crown.
- ❑ Use a **torque wrench** to torque tighten the **camshaft timing sprocket crown bolts (14 N.m)**.
- ❑ Remove:
  - the TDC setting pin **(Mot. 1489)**,
  - the camshaft timing sprocket setting pin **(Mot. 1430)**.

K9K, and 722 or 724 or 728 or 729

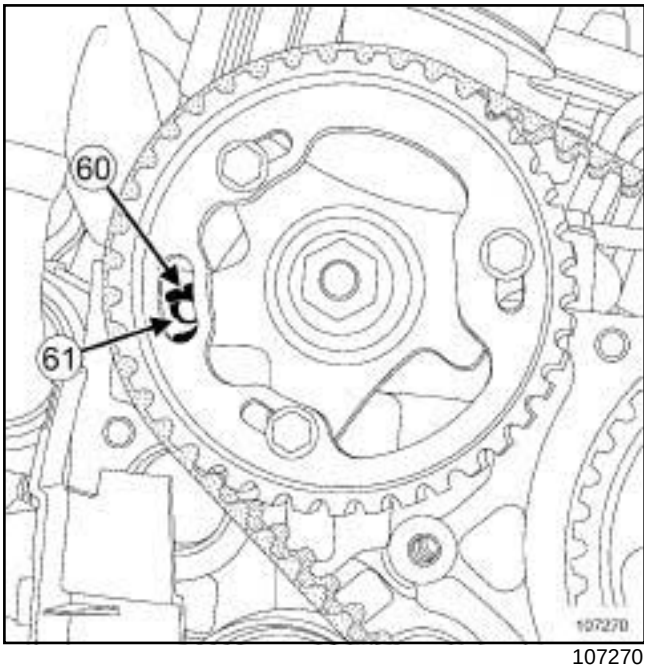

107270

❑ Rotate the crankshaft clockwise through two revolutions (timing end). Before the hole (**60**) in the camshaft timing sprocket is opposite the hole (**61**) in the cylinder head:

- screw the TDC setting pin **(Mot. 1489)** into the cylinder block,
- bring the crankshaft slowly and smoothly against the TDC setting pin.

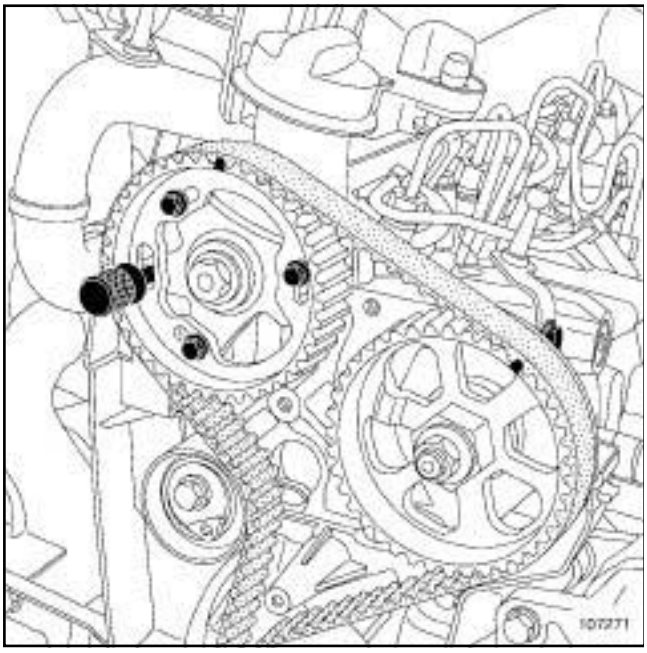
107271

❑ Lock the camshaft timing sprocket using the **(Mot. 1430)**.

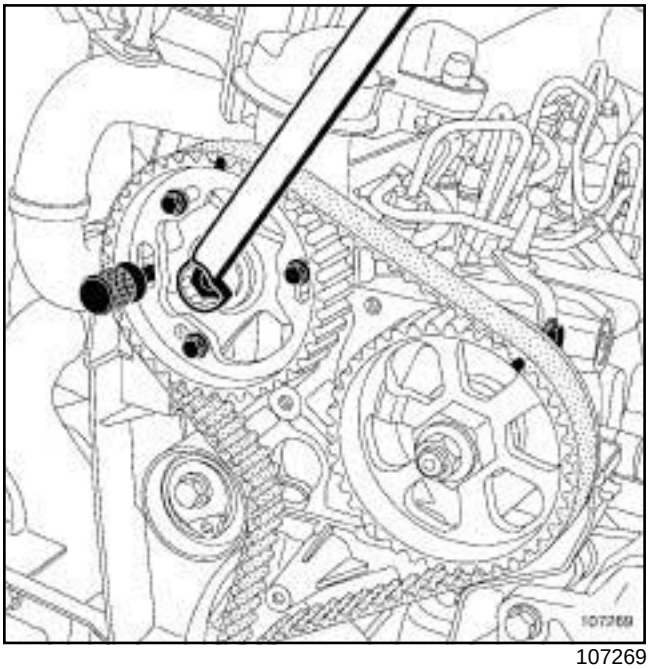
107269

❑ If the pin **(Mot. 1430)** does not engage:

- loosen the camshaft timing sprocket crown bolts by a maximum of one turn,
- turn the camshaft timing sprocket hub using a **offset spanner (18 mm)** to set the camshaft timing sprocket hub,
- do not retighten the camshaft timing sprocket crown bolts.

❑ Undo the camshaft timing sprocket crown bolts.

K9K, and 722 or 724 or 728 or 729

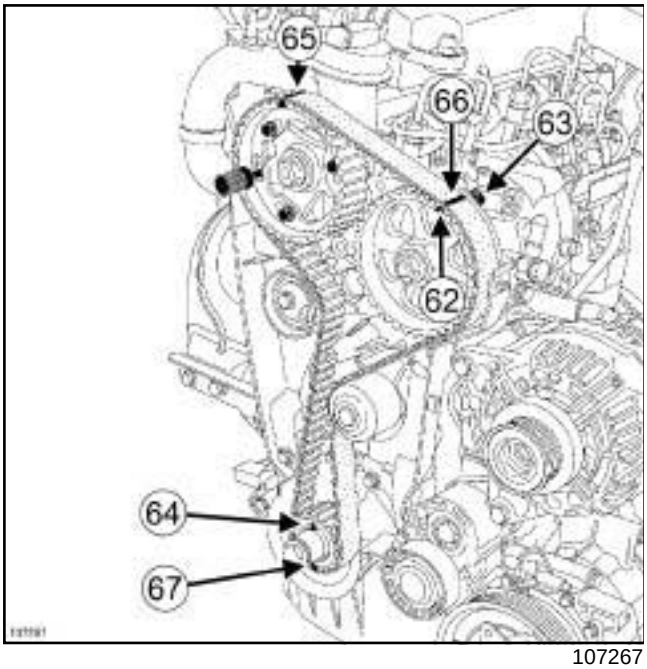

107267

❑ Check:

- that the high pressure pump pinion mark (**62**) is opposite the bolt head (**63**) ,
- that the crankshaft timing sprocket collet (**64**) is positioned vertically at the top,
- that there are 19 belt tooth grooves between the marks on the camshaft sprocket (**65**) and the high pressure pump pinion (**66**) ,
- that there are 51 belt tooth grooves between the marks on the crankshaft sprocket (**67**) and the high pressure pump pinion (**66**) .

Note:

After two turns, the tension wheel index markers may be in two different positions.

The rotation of the tension wheel eccentric depends on the position.

First position

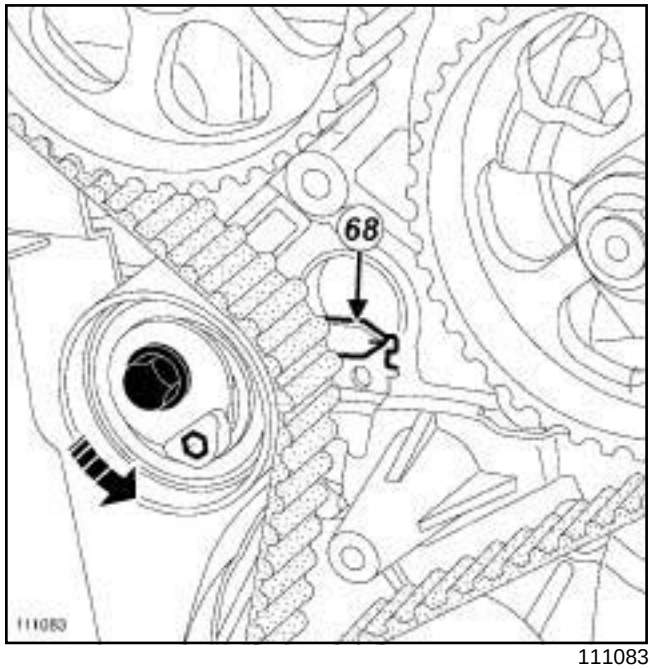

111083

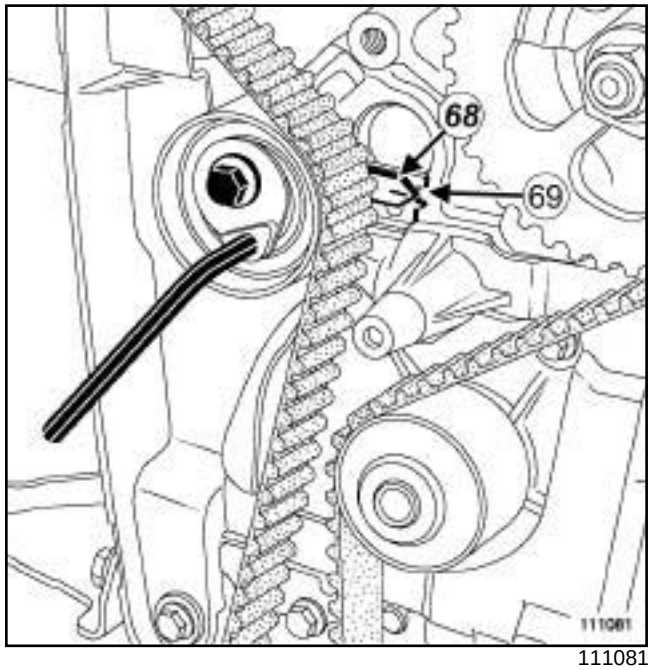

111081

❑ Loosen the tensioning roller bolt by no more than one turn, holding it with a **6 mm** Allen key.

❑ Gradually align the adjustable index (**68**) in the middle of the timing window (**69**) , **turning the key anticlockwise**.

❑ Use a **torque wrench** to torque tighten:

- the **tensioning roller bolt (27 N.m)**,
- the **camshaft timing sprocket crown bolts (14 N.m)**.

K9K, and 722 or 724 or 728 or 729

Second position

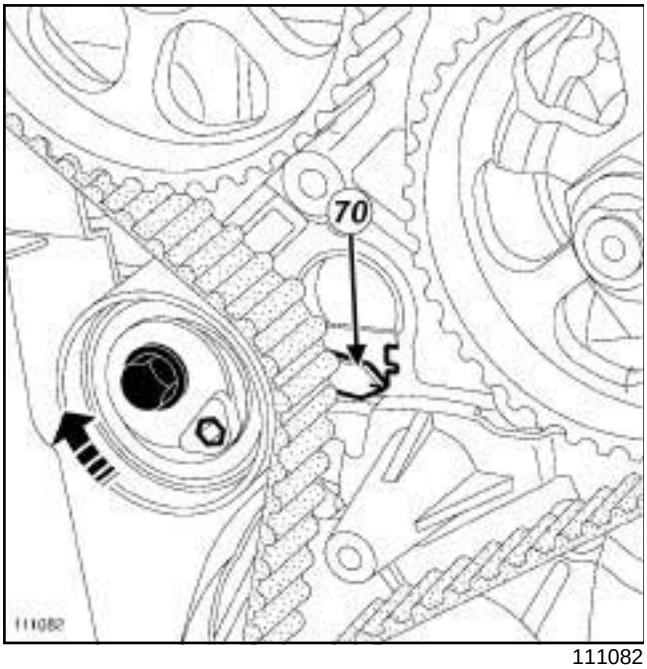

111082

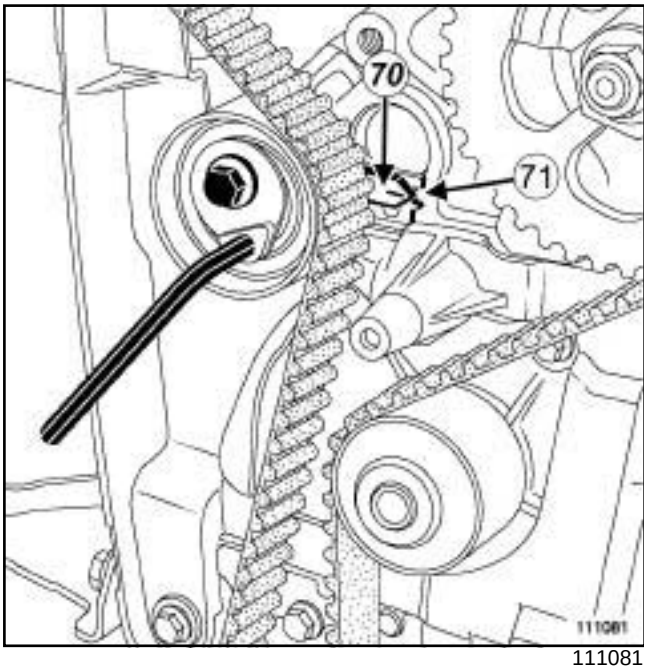

111081

❑ Loosen the tensioning roller bolt by no more than one turn, holding it with a **6 mm** Allen key.

❑ Gradually align the adjustable index (**70**) in the middle of the timing window (**71**) , **turning the key clockwise**.

❑ Use a **torque wrench** to torque tighten:

- the **tensioning roller bolt (27 N.m)**,
- the **camshaft timing sprocket crown bolts (14 N.m)**.

❑ Remove the following tools:

- the TDC setting pin **(Mot. 1489)**,
- the camshaft timing sprocket setting pin **(Mot. 1430)**.

❑ Rotate the crankshaft clockwise through two revolutions (timing end). Before the hole in the camshaft timing sprocket is opposite the hole in the cylinder head:

- screw the TDC setting pin **(Mot. 1489)** into the cylinder block,
- bring the crankshaft slowly and smoothly against the TDC setting pin.

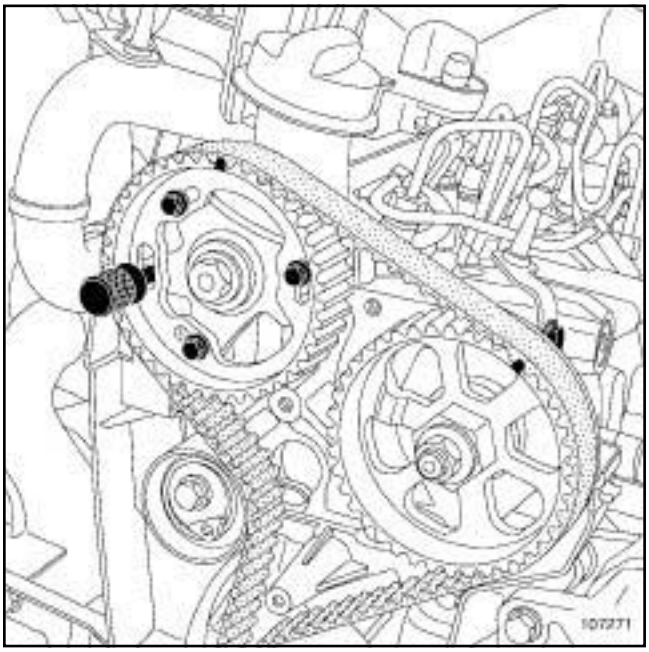

107271

❑ Lock the camshaft timing sprocket using the **(Mot. 1430)**.

❑ If the pin does not engage, repeat the timing belt refitting operation.

K9K, and 722 or 724 or 728 or 729

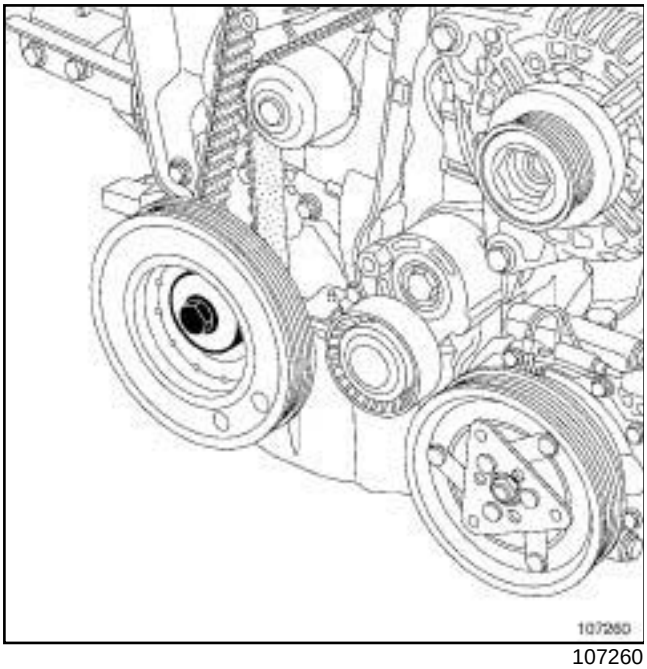

107260

- ❑ Refit the accessories crankshaft pulley with a new bolt.
- ❑ Use a **angle torque wrench** or a **torque wrench** and a **cylinder head bolt tightening gauge (angular measuring type)** (crankshaft against the TDC setting pin) to torque and angle tighten the **crankshaft accessories pulley M 14 bolt (120 N.m + 95° ± 15°)**.
- ❑ Remove the following tools:
  - the TDC setting pin **(Mot. 1489)**,
  - the camshaft timing sprocket setting pin **(Mot. 1430)**.
- ❑ Refit the TDC pin plug, coating the threading with **SILICONE ADHESIVE SEALANT**.
- ❑ Use a **torque wrench** to torque tighten the **TDC pin plug (25 N.m)**.

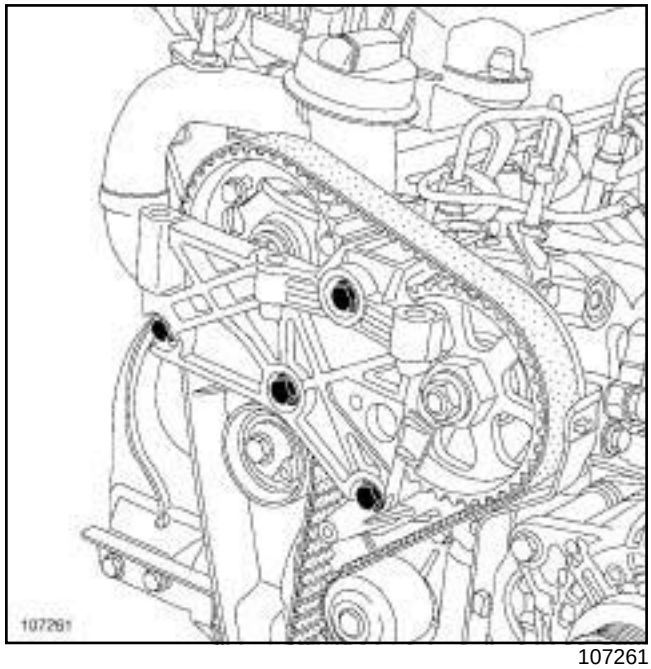

107261

- ❑ Refit the cylinder head suspended mounting .
- ❑ Use a **torque wrench** to torque tighten the **cylinder head suspended mounting bolts (25 N.m)**.

K9K, and 722 or 724 or 728 or 729

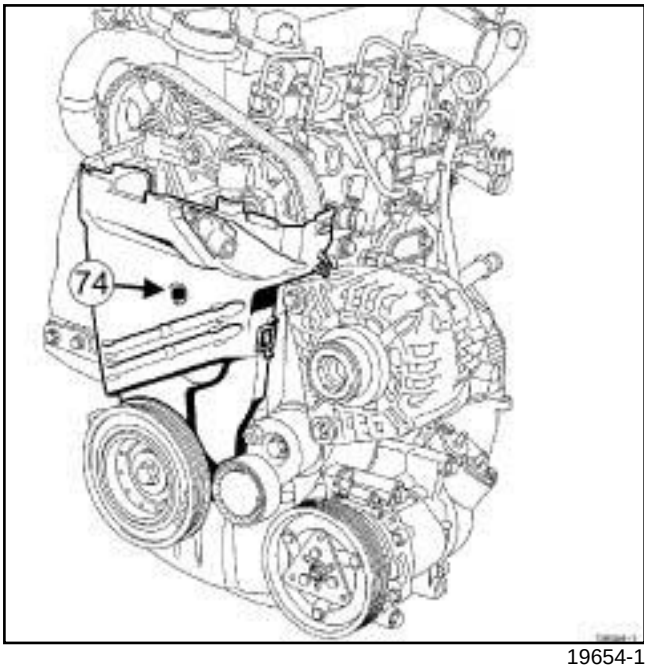

19654-1

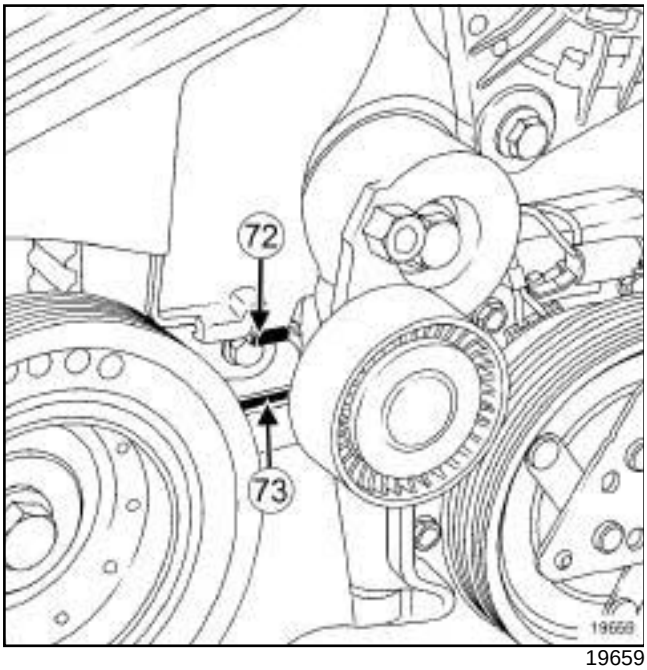

19659

❑ Refit:

- the lower timing cover, positioning the tab (**72**) in the inner timing cover hole (**73**) ,
- the timing cover plastic bolt (**74**) .

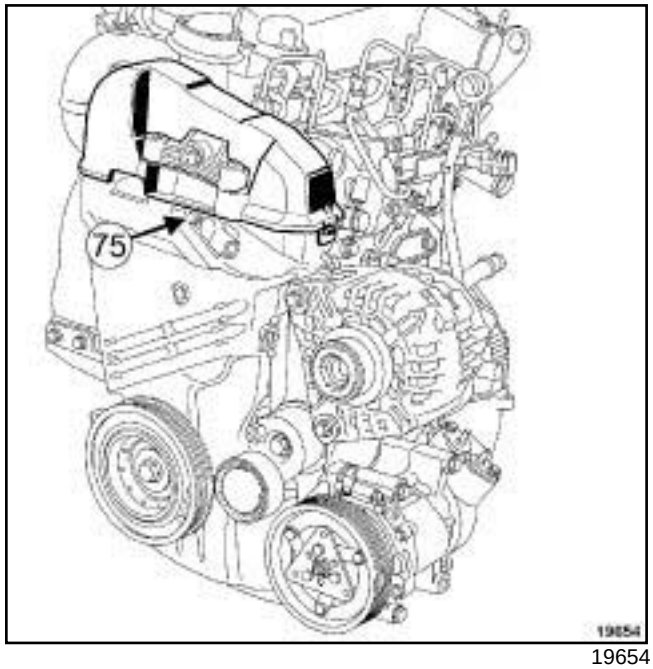

19654

❑ Refit the camshaft position sensor (**75**) .

❑ Use a **torque wrench** to torque tighten the **camshaft position sensor bolt (8 N.m)**.

❑ Refit the upper timing cover.

IV - FINAL OPERATION

❑ Refit:

- the accessories belt (see **11A**, **Top and front of engine**, **Accessories belt: Removal - Refitting**, page **11A-4**) ,
- the right-hand suspended engine mounting (see **19D**, **Engine mounting**, **Right-hand suspended engine mounting: Removal - Refitting**, page **19D-20**) .

❑ Remove the tool **(Mot. 1672)**.

❑ Refit:

- the engine cover,
- the lower engine tie-bar (see **19D**, **Engine mounting**, **Lower engine tie-bar: Removal - Refitting**, page **19D-36**) ,
- the engine undertray,
- the front section of the front right-hand wheel arch liner (see **Front wheel arch liner: Removal - Refitting**) (55A, Exterior protection),
- the front right-hand wheel (see **Wheel: Removal - Refitting**) (35A, Wheels and tyres).

❑ Connect the battery (see **Battery: Removal - Refitting**) (80A, Battery).

B84 or C84 or G84 or S84, and F9Q

Essential special tooling	
Mot. 1453	Multiple-adjusting engine mounting support with retaining straps.
Mot. 1453-01	Additional winder nut on engine lift support Mot. 1453.
Mot. 1054	TDC setting pin.
Mot. 1543	Tool for pretensioning timing belt.
Mot. 1705	Adapter for the timing belt pretensioning tool. To be used with Mot.1543.
Mot. 1505	Belt tension setting tool (frequency meter)
Mot. 1715	Belt tension checking tool (frequency indicator).

Essential equipment
safety strap(s)

Tightening torques ▽	
bolts of the « tensioning roller - mounting» assembly	**10 Nm**
tensioning roller nut	**45 Nm**
TDC pin plug	**25 N.m**
timing cover bolts	**7 Nm**
crankshaft accessories pulley bolt	**40 Nm + 110° ± 10°**

IMPORTANT
Wear protective gloves during the operation.

WARNING
Do not run the engine without the accessories belt to avoid damaging the crankshaft accessories pulley.

WARNING
When replacing a timing belt, the timing belt, fixed roller, tensioning roller and crankshaft accessories pulley bolts must be replaced.

WARNING
The belt must be replaced with a new one if it has been removed.

Note:
Never rotate the engine anti-clockwise (timing end).

REMOVAL

I - REMOVAL PREPARATION OPERATION

❑ Position the vehicle on a two-post lift (see **Vehicle: Towing and lifting**) (MR 364, 02A, Lifting equipment).

❑ Disconnect the battery (see **Battery: Removal - Refitting**) (MR 364, 80A, Battery).

❑ Remove:

- the engine undertray,
- the accessories belt (see **11A**, **Top and front of engine**, **Accessories belt: Removal - Refitting**, page **11A-4**) .

B84 or C84 or G84 or S84, and F9Q

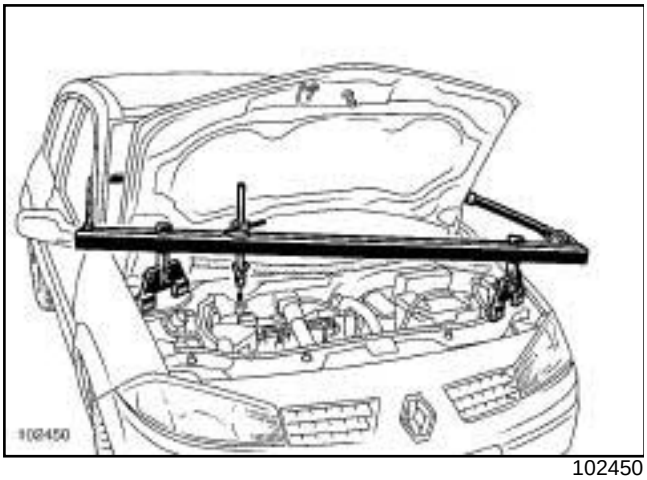

102450

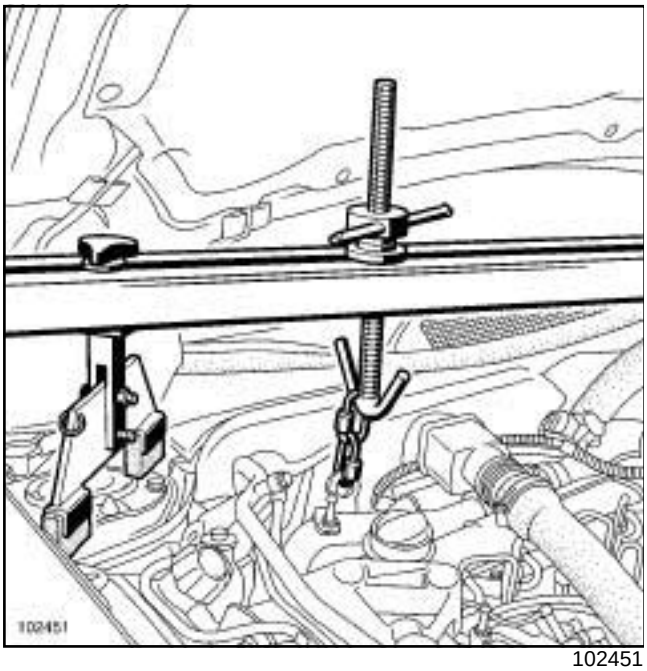

102451

❑ Fit the **(Mot. 1453)** and **(Mot. 1453-01)** with **safety strap(s)**.

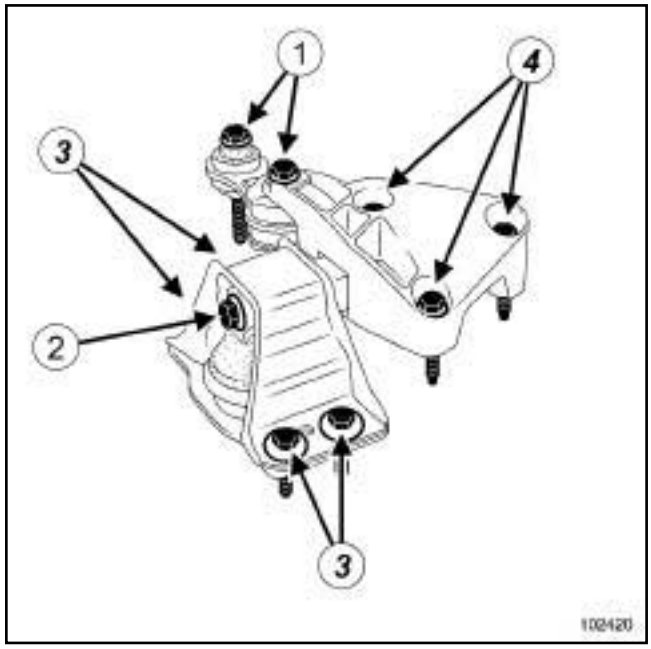

102420

❑ Remove:

- the upper engine tie-bar bolts (**1**) ,
- the upper engine tie-bar.

❑ Mark the position of the rubber mounting bush in relation to the body.

❑ Undo the rubber mounting bush bolt (**2**) on the engine cover.

❑ Remove:

- the rubber mounting bush bolts (**3**) on the body,
- the engine cover bolts (**4**) on the engine,
- the engine cover,
- the rubber mounting bush.

WARNING
In order to avoid any refrigerant leaks, do not damage (deform, twist, etc.) the pipe.

❑ Remove:

- the lower engine tie-bar bolts,
- the lower engine tie-bar.

B84 or C84 or G84 or S84, and F9Q

II - OPERATION FOR REMOVAL OF PART CONCERNED

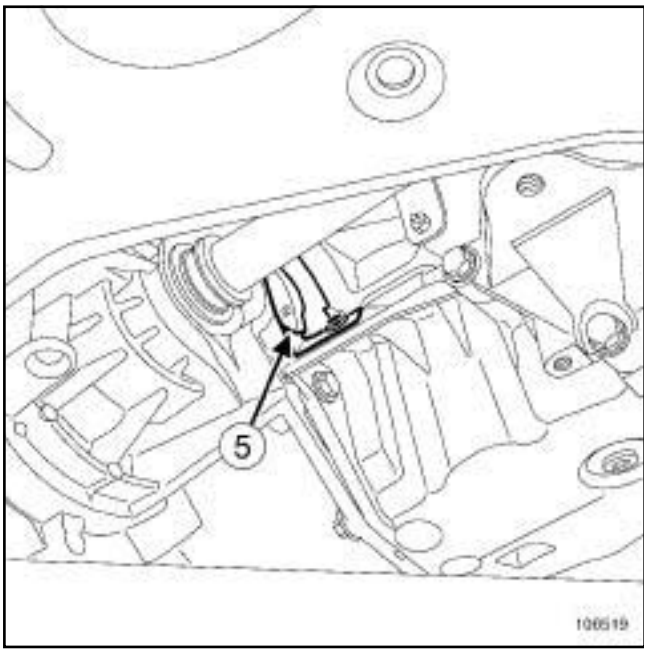

106519

❑ Remove the flywheel protector (**5**) .

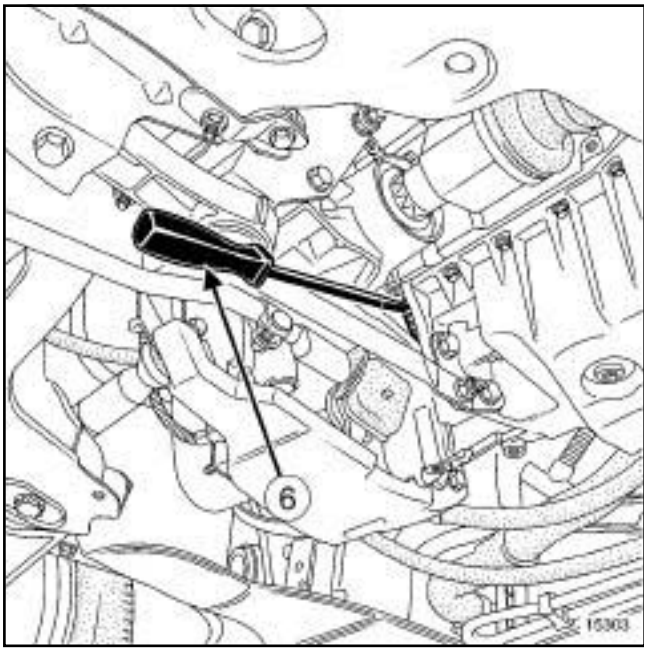

15303

❑ Lock the flywheel using a large screwdriver (**6**) .

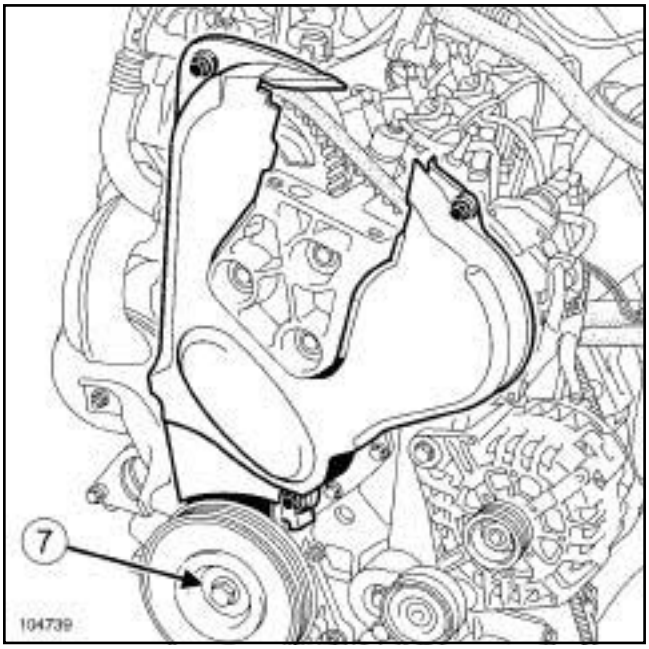

104739

❑ Remove:

- the crankshaft accessories pulley bolt (**7**) ,
- the crankshaft accessories pulley.

Adjusting the timing

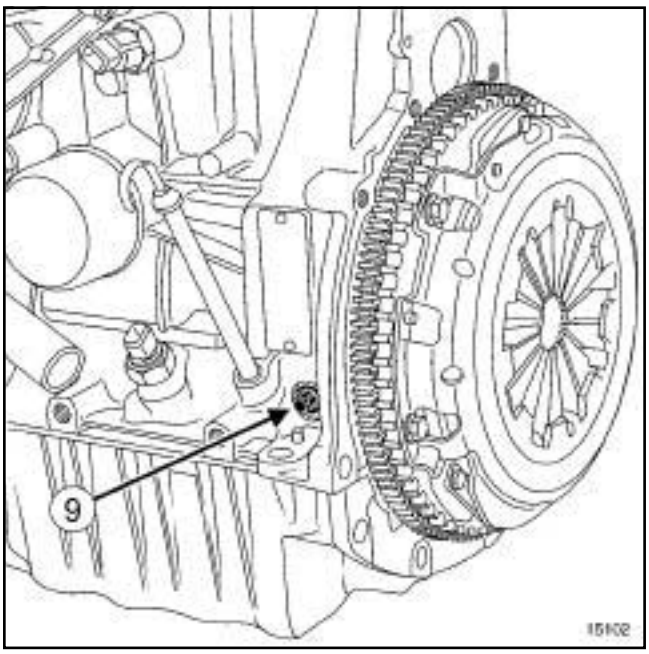

15102

❑ Remove the TDC setting rod cap (**9**) .

❑ Fit the TDC setting pin **(Mot. 1054)**, without pushing it in completely.

❑ Remove the timing cover.

B84 or C84 or G84 or S84, and F9Q

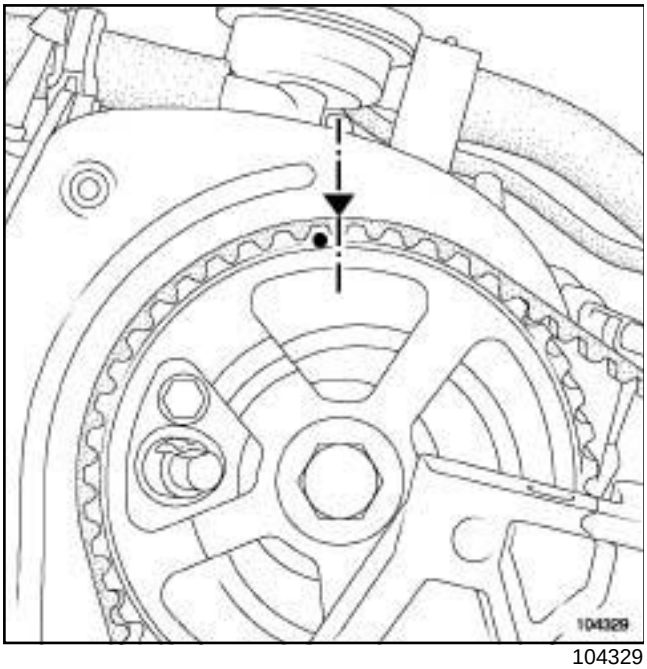

104329

- ❑ Rotate the crankshaft in a clockwise direction at the timing end.
- ❑ Bring the camshaft pulley mark to half a tooth before the mark on the inner timing cover.

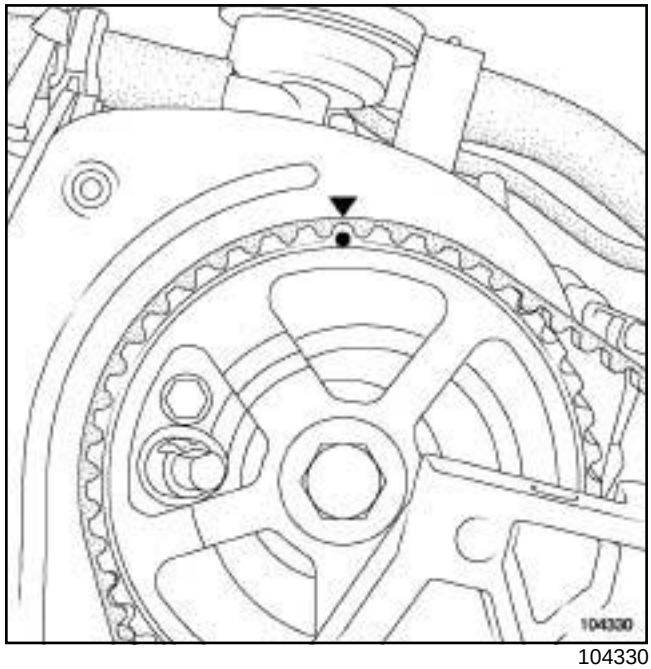

104330

- ❑ Push the TDC setting pin.
- ❑ Turn the crankshaft clockwise (timing end) until the crankshaft is set.

> Note:
>
> The camshaft pulley mark should be aligned with the inner timing cover mark.

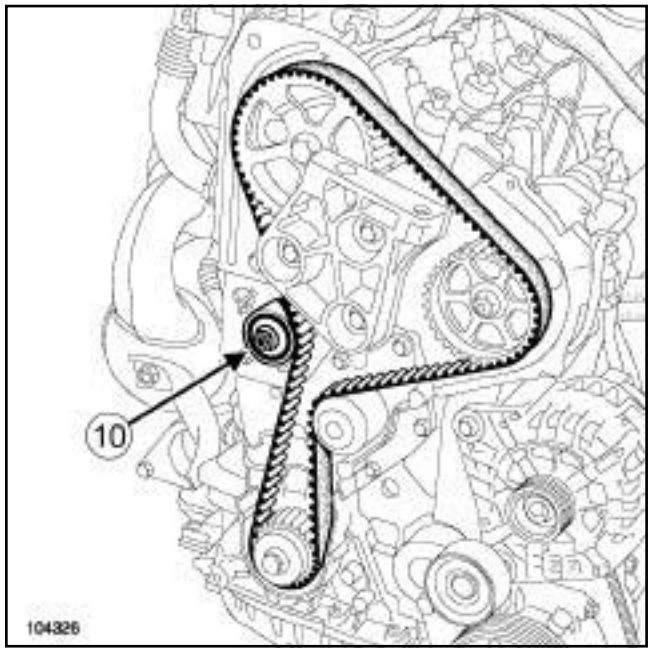

104326

- ❑ Undo the tensioning roller nut (**10**) to loosen the tensioning roller.
- ❑ Remove the timing belt.

B84 or C84 or G84 or S84, and F9Q

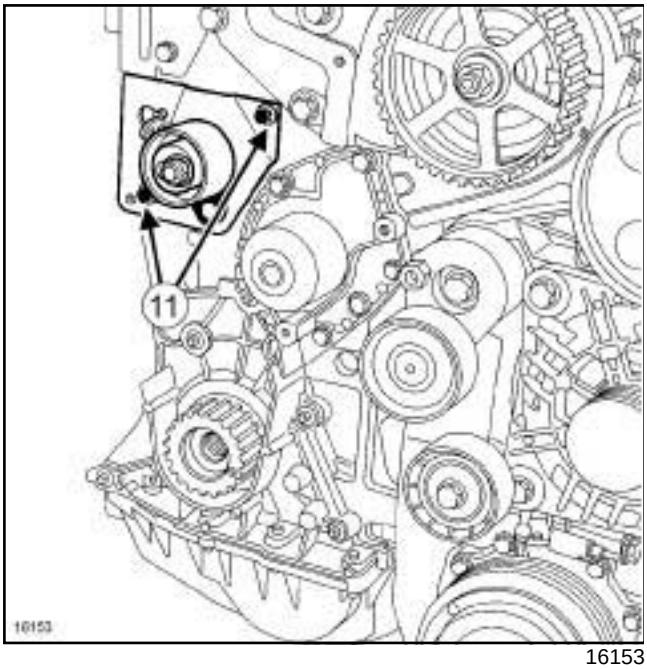

16153

❑ Remove:

- the bolts (**11**) of the « tensioning roller - mounting » assembly,
- the « tensioning roller - mounting » assembly.

REFITTING

I - REMOVAL PREPARATION OPERATION

❑ Replace the timing belt, the tensioning roller and its bolt, and the crankshaft accessories pulley and bolt.

II - REFITTING OPERATION FOR PART CONCERNED

❑ Refit:

- the new « tensioning roller - mounting » assembly,
- the bolts of the « tensioning roller - mounting » assembly.

❑ Torque tighten the **bolts of the « tensioning roller - mounting » assembly (10 Nm)**.

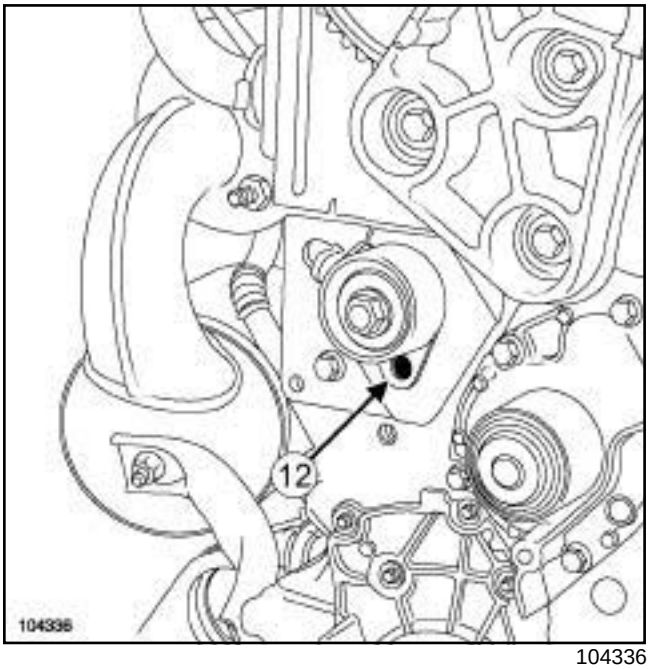

104336

❑ Check that the tension wheel is correctly positioned on the pin (**12**) .

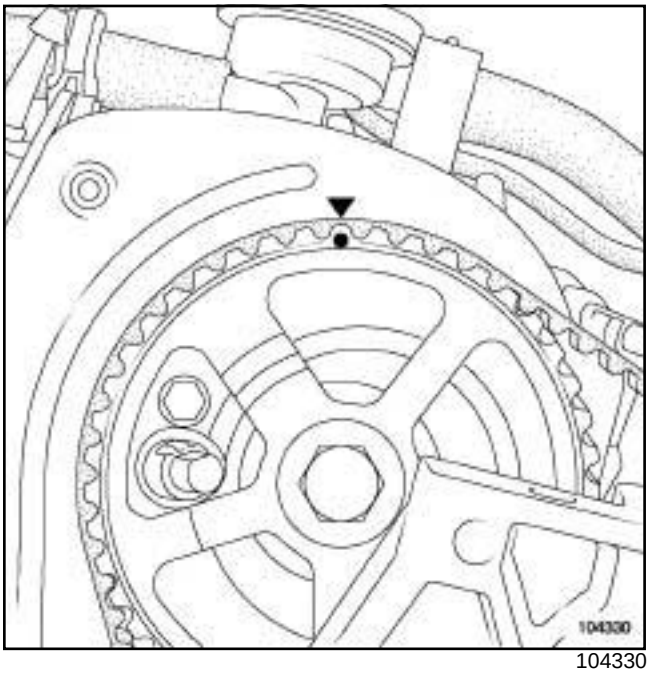

104330

❑ Check that the mark on the camshaft pulley lines up with the mark on the inner timing cover.

B84 or C84 or G84 or S84, and F9Q

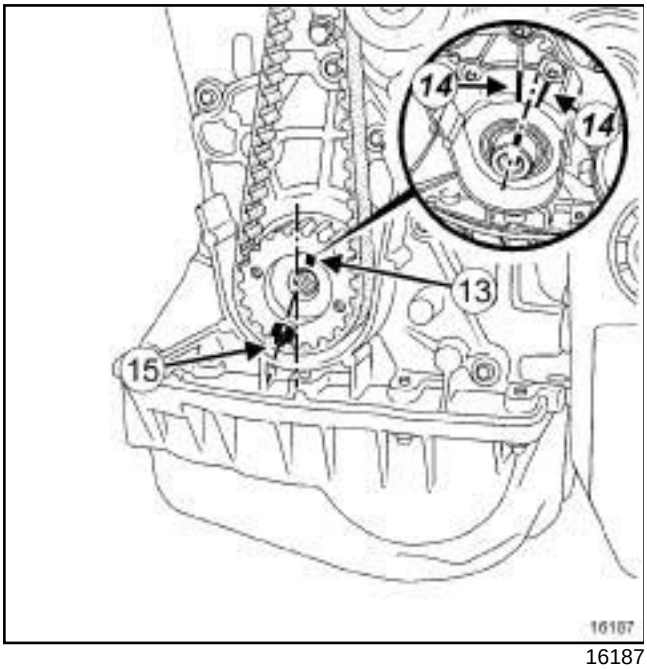

16187

❑ Check that the crankshaft is correctly centred:

- the crankshaft groove (**13**) should be in the middle of the two crankshaft closure cover ribs (**14**) ,
- the crankshaft timing sprocket mark (**15**) should be set one tooth to the left of the engine's vertical axis.
- the TDC setting pin **(Mot. 1054)** is in place.

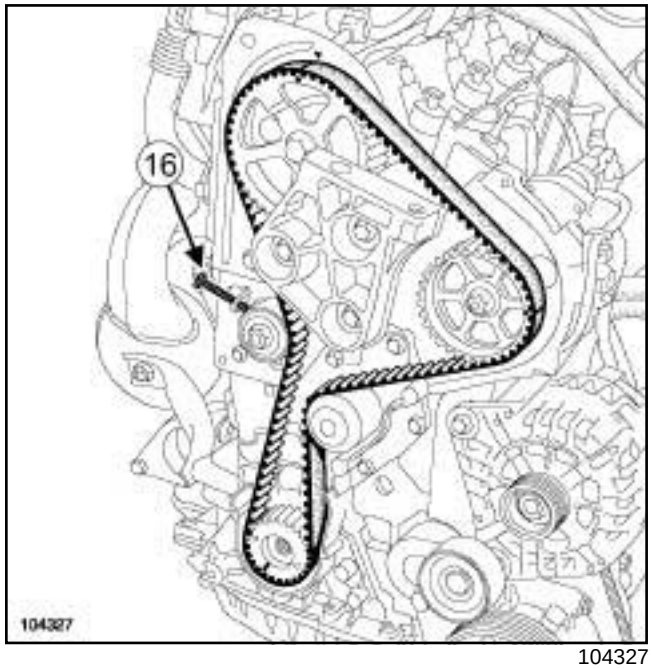

104327

❑ Fit the new timing belt, aligning the marks on the belt with those on the crankshaft sprockets, camshaft sprockets and the high pressure pump.

> Note:
>
> There must be 28 belt grooves between the marks of the high pressure pump pinion and camshaft sprocket.

❑ Press the tensioning roller against the timing belt by tightening the bolt (**16**) on the tensioning roller mounting.

> Note:
>
> The bolt (**16**) is locally produced.

❑ Remove the TDC setting pin **(Mot. 1054)**.

❑ Fit the old crankshaft accessories pulley bolt.

B84 or C84 or G84 or S84, and F9Q

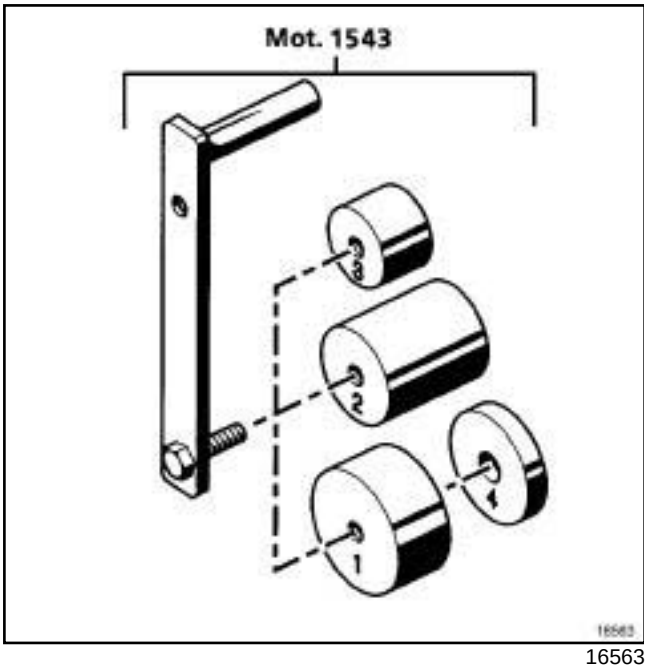

16563

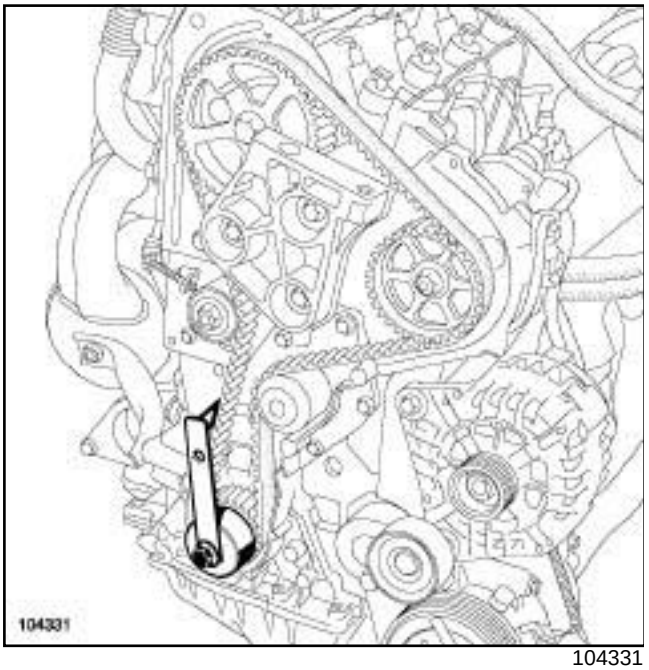

104331

❑ Fit the timing belt pretensioning tool **(Mot. 1543)** fitted with the cover **(Mot. 1705)** on the crankshaft accessories pulley bolt.

B84 or C84 or G84 or S84, and F9Q

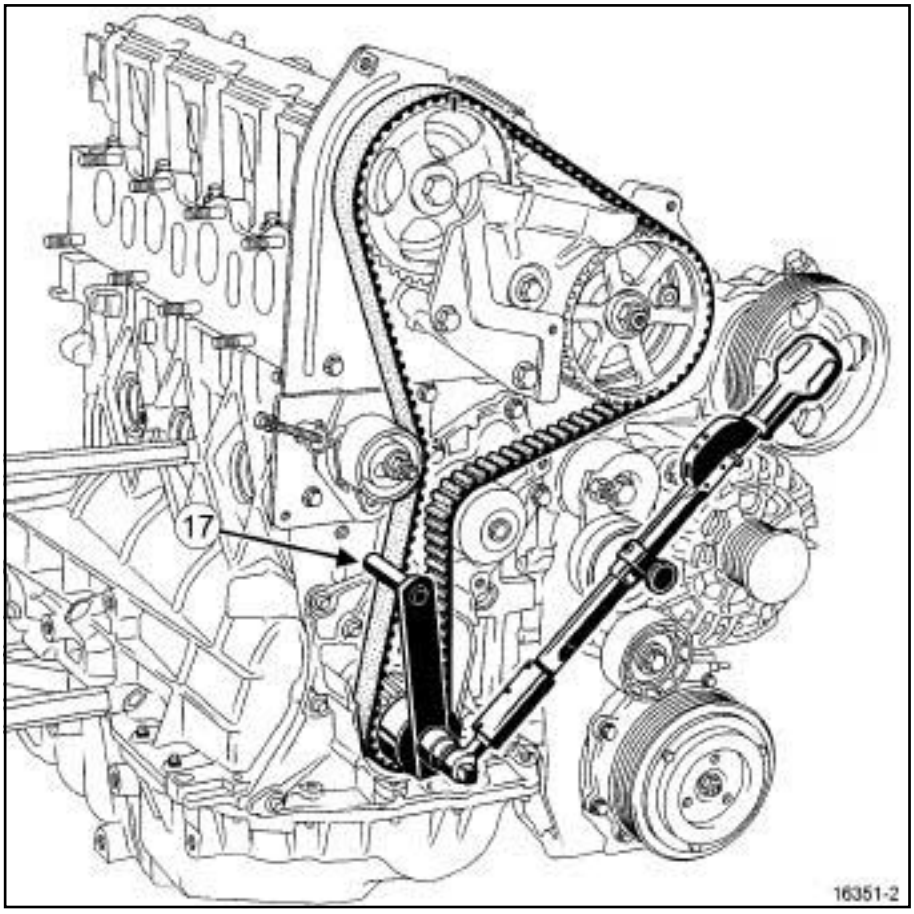

16351-2

- Check that the bar (**17**) of the **(Mot. 1543)** is across the entire width of the timing belt.
- Pretension the timing belt between the crankshaft timing sprocket and the tensioning roller using the **(Mot. 1543)** and a torque wrench set to a torque of **(11 Nm)**.

B84 or C84 or G84 or S84, and F9Q

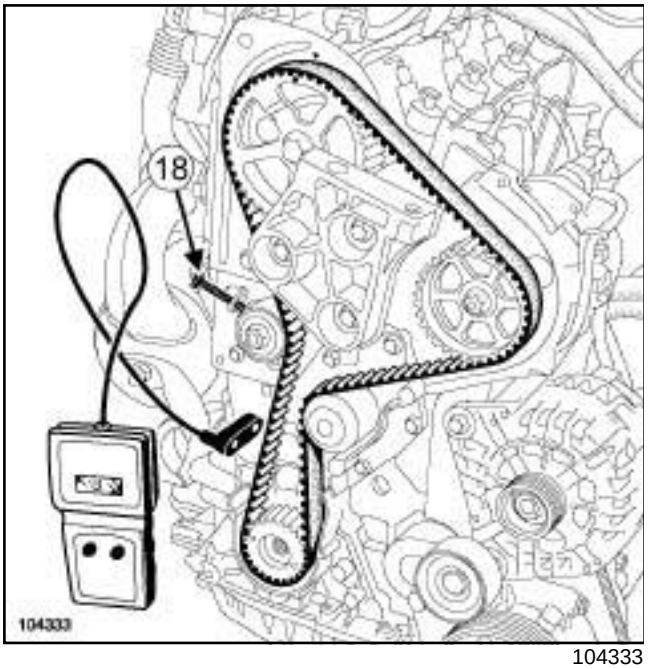

104333

- Position the sensor from **(Mot. 1505)** or **(Mot. 1715)** between the crankshaft sprocket and the tensioning roller.
- Tension the belt using the bolt (**18**) until the recommended value **90 ± 3 Hz** is reached.

> **WARNING**
> Failure to observe the following procedure can lead to the destruction of the component.

- Fit the TDC setting pin **(Mot. 1054)**, without pushing it in completely.
- Turn the crankshaft through four revolutions.

B84 or C84 or G84 or S84, and F9Q

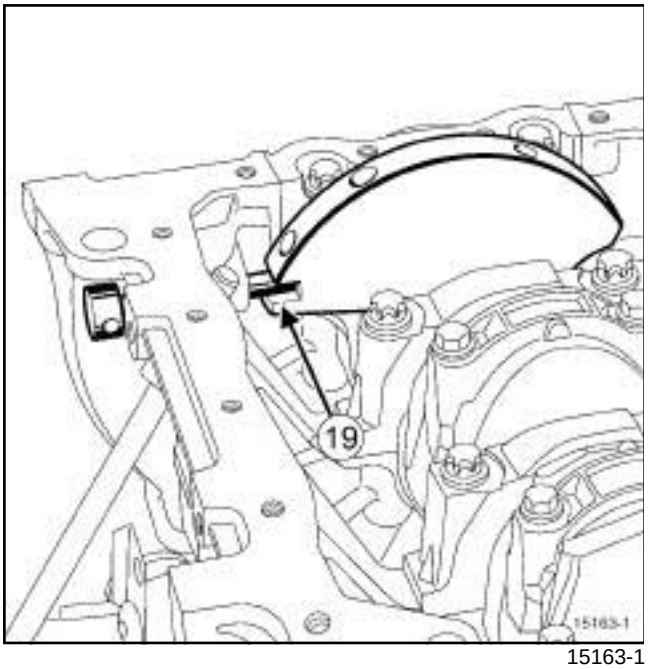

15163-1

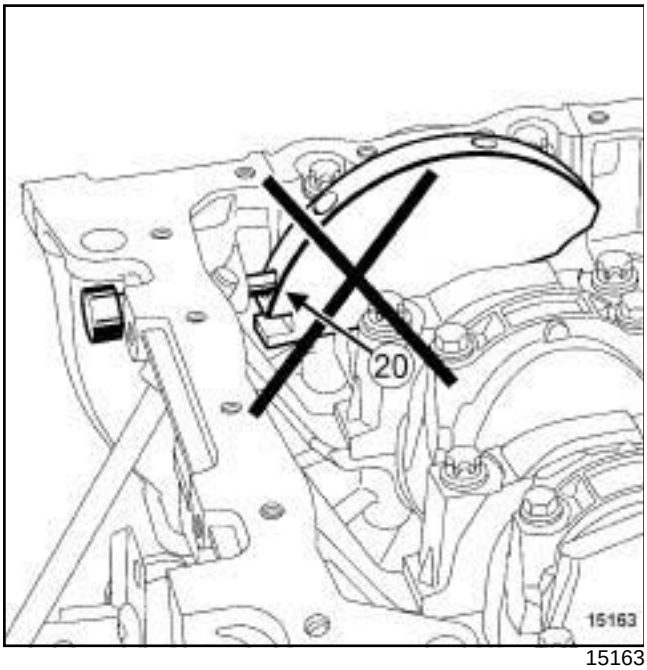

15163

- Set the timing to its setting point (start pushing the pin (**19**) half a tooth before alignment of the camshaft pulley mark and the inner timing cover mark, to prevent it entering a camshaft balancing hole (**20**)).
- Remove the TDC setting rod **(Mot. 1054)**.
- Fit the timing belt pretensioning tool **(Mot. 1543)** fitted with the cover **(Mot. 1705)** (if necessary) on the crankshaft accessories pulley bolt.
- Check that the bar of the **(Mot. 1543)** is across the entire width of the timing belt.
- Pretension the timing belt between the crankshaft timing sprocket and the tensioning roller using the **(Mot. 1543)** and a torque wrench set to a torque of **(11 Nm)**.

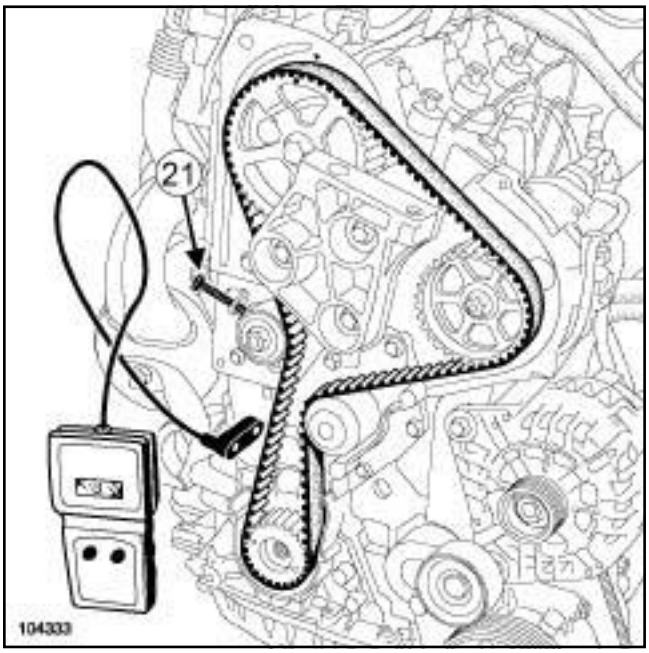

104333

- Position the sensor of the **(Mot. 1505)** or **(Mot. 1715)** between the crankshaft timing sprocket and the tensioning roller.
- Tension the belt using the locally manufactured bolt (**21**) until the recommended value of **78 ± 3 Hz** is reached.
- Torque tighten the **tensioning roller nut (45 Nm)**.
- Remove the tool **(Mot. 1543)**.
- Place a drop of **SILICONE ADHESIVE SEALANT** on the thread of the TDC pin plug.
- Refit the TDC pin plug.
- Torque tighten the **TDC pin plug (25 N.m)**.
- Refit:

  - the timing cover,

  - the timing cover bolts.
- Torque tighten the **timing cover bolts (7 Nm)**.

B84 or C84 or G84 or S84, and F9Q

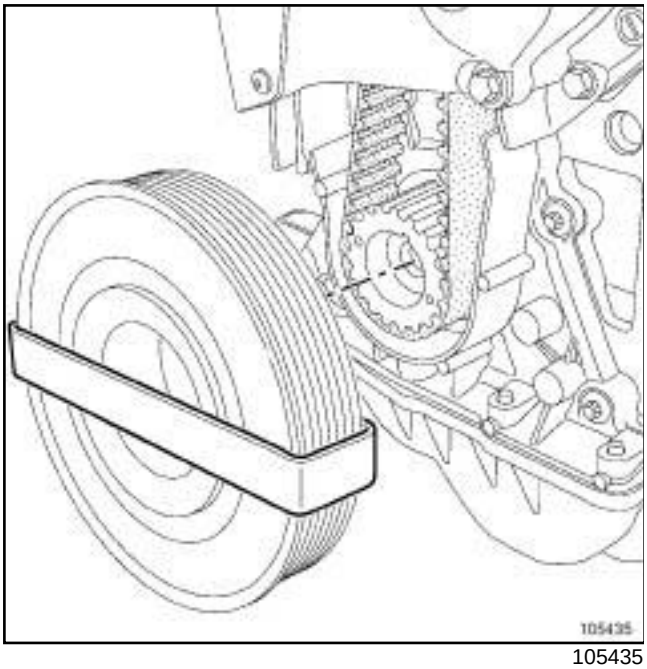

105435

❑ Refit:

- the crankshaft accessories pulley, without separating its two component parts.
- the new crankshaft accessories pulley bolt.

❑ Torque and angle tighten the **crankshaft accessories pulley bolt (40 Nm + 110° ± 10°)**.

III - FINAL OPERATION

❑ Refit:

- the flywheel guard,
- the rubber mounting bush,
- the engine cover,
- the engine cover bolts on the engine,
- the rubber mounting bush bolts on the body.

❑ Fit without tightening the rubber mounting bush bolt on the engine cover.

❑ Refit:

- the upper engine tie-bar,
- the upper engine tie-bar bolts.

❑ Fit the rubber mounting bush in its initial position in relation to the body.

❑ Torque tighten (see **19D**, **Engine mounting**, **Suspended engine mounting: Tightening torque**, page **19D-3**) :

- the engine cover bolts on the engine,
- the rubber mounting bush bolts on the body,
- the upper engine tie-bar bolts.

❑ Refit:

- the lower engine tie-bar,
- the lower engine tie-bar bolts.

❑ Torque tighten the lower engine tie-bar bolts (see **19D**, **Engine mounting**, **Suspended engine mounting: Tightening torque**, page **19D-3**) .

❑ Remove the **(Mot. 1453)** and **(Mot. 1453-01)** with the **safety strap(s)**.

❑ Refit:

- the accessories belt (see **11A**, **Top and front of engine**, **Accessories belt: Removal - Refitting**, page **11A-4**) ,
- the engine undertray.

❑ Connect the battery (see **Battery: Removal - Refitting**) (MR 364, 80A, Battery).

B84 or C84 or G84 or S84, and F4R, and 770 or 771 or 776

Essential special tooling	
Mot. 1453	Multiple-adjusting engine mounting support with retaining straps.
Mot. 1672	Lower engine support.
Mot. 1054	TDC setting pin.
Mot. 1509	Camshaft sprocket locking tool.
Mot. 1509-01	Conversion kit for tool Mot.1509 or Mot.1801
Mot. 799-01	Timing gear wheel immobiliser.
Mot. 1496	Tool for setting camshaft.
Mot. 1487	Tool for removing the camshaft covers (57 mm diameter).
Mot. 1448	Long nose pliers for hose clips.

Tightening torques ▽	
toothed sprocket nuts	**80 Nm**
toothed sprocket nuts	**80 Nm**
fixed roller mounting bolt	**50 Nm**
tensioning roller nut	**7 Nm**
toothed sprocket nuts	**80 Nm**
old inlet camshaft dephaser mounting bolt	**30 Nm**
old exhaust camshaft pulley nut	**30 Nm**
toothed sprocket nuts	**80 Nm**
old inlet and exhaust camshaft pulley nuts	**30 Nm**
toothed sprocket nuts	**80 Nm**
toothed sprocket nuts	**80 Nm**
tensioning roller nut	**28 Nm**
toothed sprocket nuts	**80 Nm**

Tightening torques ▽	
inlet camshaft dephaser mounting bolt	**30 Nm**
exhaust camshaft pulley nut	**30 Nm**
inlet camshaft dephaser mounting bolt	**100 Nm**
camshaft pulley dephaser blanking cover	**25 Nm**
exhaust camshaft pulley nut	**86° ± 6°**
toothed sprocket nuts	**80 Nm**
inlet and exhaust camshaft pulley nut	**86° ± 6°**
nuts	**80 Nm**
inlet and exhaust camshaft pulley nuts	**30 Nm + 86° ± 6°**
crankshaft accessories pulley bolt	**40 Nm + 110° ± 10°**
lower timing cover M6 bolts	**80 Nm**
lower timing cover M8 bolts	**20 Nm**
upper timing cover M8 bolts	**18 Nm**
upper timing cover M10 bolts	**38 Nm**
wheel bolts	**110 Nm**
battery cover bolts	**4 Nm**

Note:

The timing belt method is the same for engines with or without camshaft dephaser.

WARNING

Never turn the engine in the opposite direction to its normal operating direction.

B84 or C84 or G84 or S84, and F4R, and 770 or 771 or 776

WARNING
Do not run the engine without the accessories belt to avoid damaging the crankshaft accessories pulley.

WARNING
On the F4R engine, it is essential to fit the crankshaft sprocket with the integrated collet.

WARNING

Replace the following parts when they are removed:

- the camshaft pulley nuts,
- the crankshaft accessories pulley,
- the crankshaft accessories pulley bolt.

WARNING
When replacing the belt, be sure to replace the tension wheels and inertia reel.

REMOVAL

❑ Position the vehicle on a two-post lift (see **Vehicle: Towing and lifting**) (MR 364, 02A, Lifting equipment).

❑ Disconnect the battery (see **Battery: Removal - Refitting**) (MR 364, 80A, Battery).

❑ Remove:

- the battery (see **Battery: Removal - Refitting**) (MR 364, 80A, Battery),
- the front right-hand wheel,
- the front right-hand wheel arch liner,
- the engine covers.

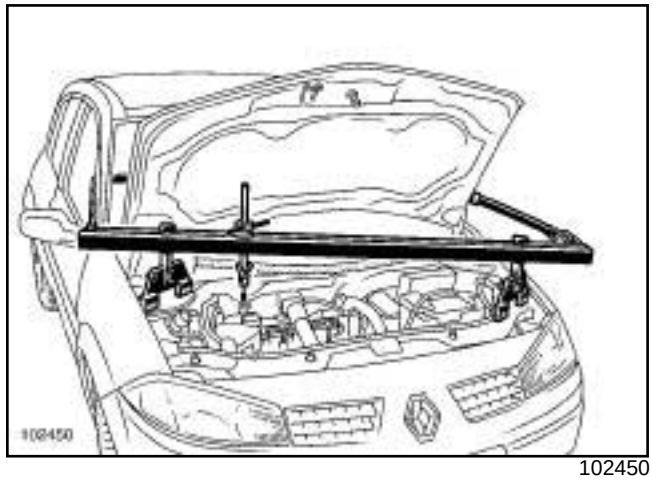

102450

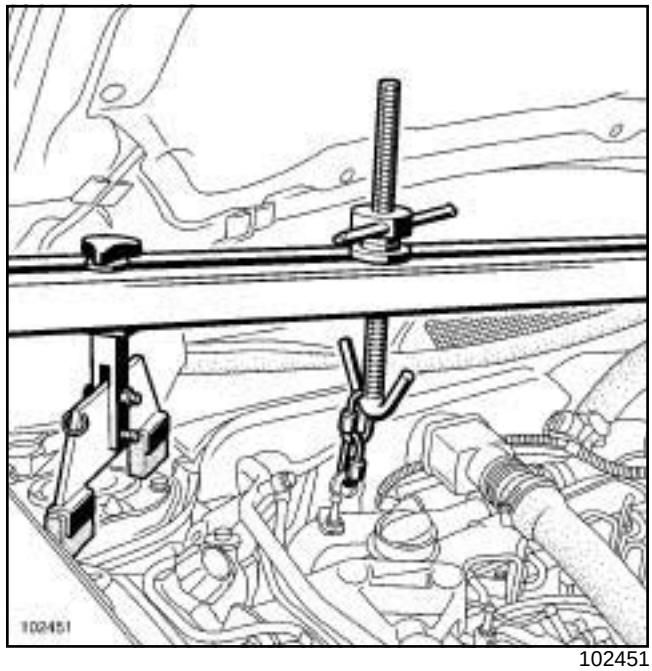

102451

❑ Position the **(Mot. 1453)** andwith their retaining belts.

B84 or C84 or G84 or S84, and F4R, and 770 or 771 or 776

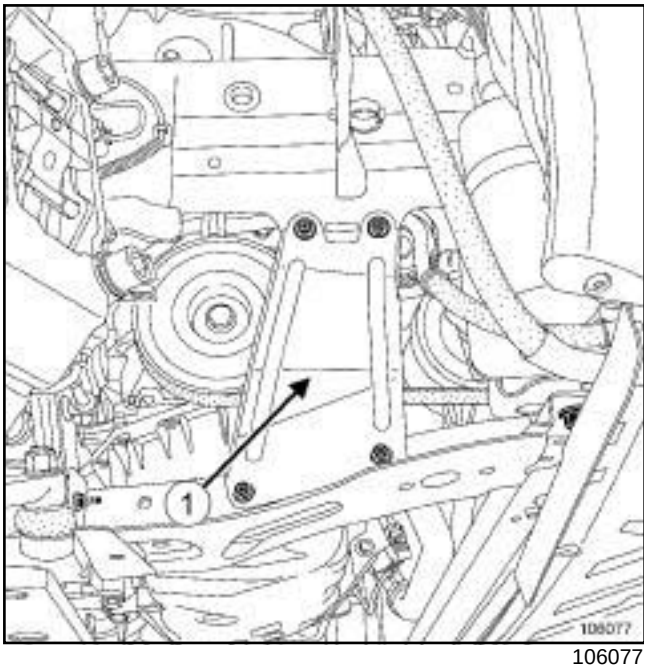

106077

❑ Remove:

- the radiator cross member right-hand side reinforcement (**1**) ,
- the lower engine tie-bar.

F4R, and 776

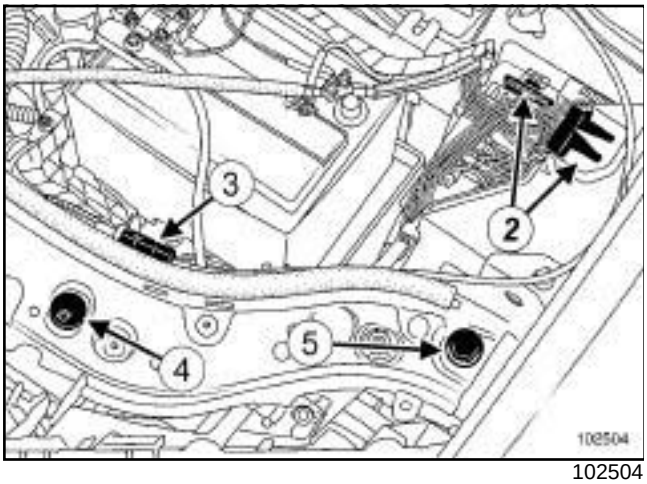

102504

❑ Disconnect the connectors (**2**) .

❑ Unclip the bonnet opening cable (**3**) .

❑ Remove:

- the clip (**4**) ,
- the fastening (**5**) ,
- the front bumper (see **Front bumper: Removal - Refitting**) (MR 365, 55A, Exterior protection).

❑ Disconnect the screen washer pipes.

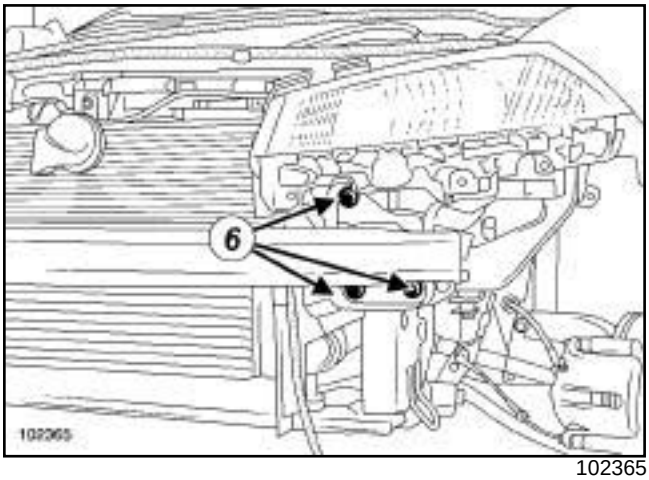

102365

❑ Remove:

- the mounting bolts (**6**) from the front end panel,
- the front end panel,
- the front right-hand driveshaft (see **Front right-hand wheel driveshaft: Removal - Refitting**) (MR 364, 29A, Driveshafts).

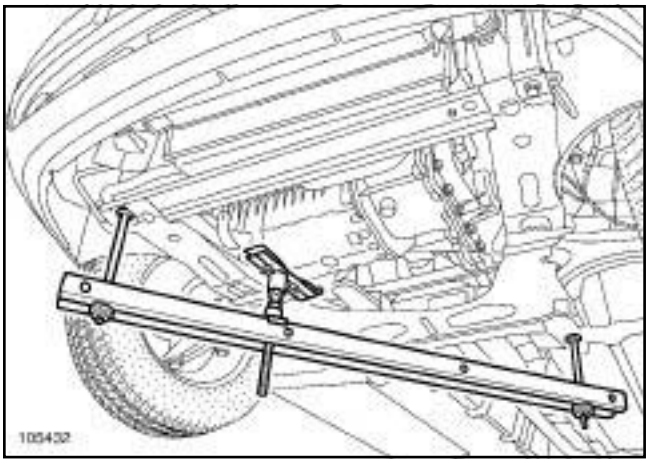

105432

❑ Position the **(Mot. 1672)** using the retaining straps.

B84 or C84 or G84 or S84, and F4R, and 770 or 771 or 776

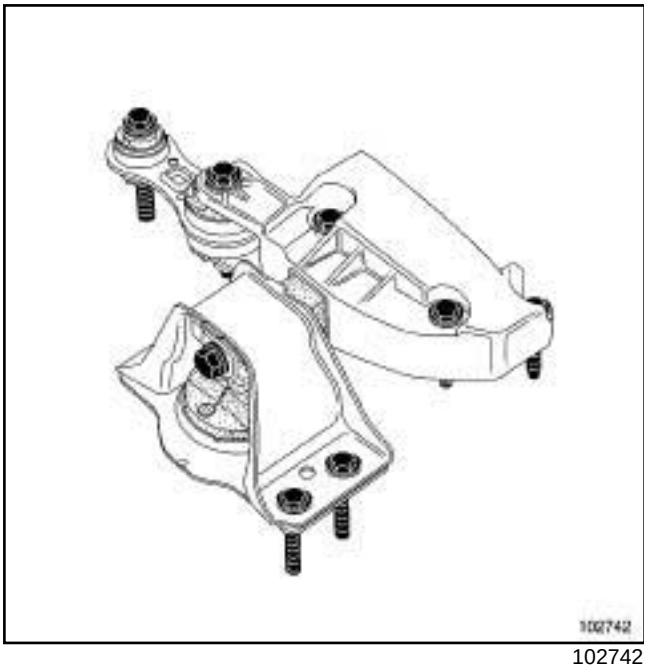

102742

❑ Mark the suspended engine mounting in relation to the body.

❑ Remove the suspended engine mounting assembly.

> Note:
> Be careful not to bend the air conditioning pipe.

❑ Remove the accessories belt (see **11A**, **Top and front of engine**, **Accessories belt: Removal - Refitting**, page **11A-4**) .

F4R, and 770 or 771

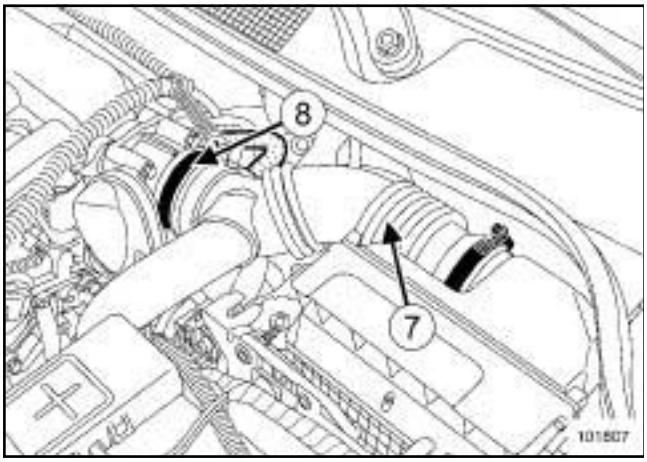

101807

❑ Remove:

- the air filter outlet duct (**7**) ,
- the throttle valve (**8**) ,
- the connector from the lifting bracket.

F4R, and 776

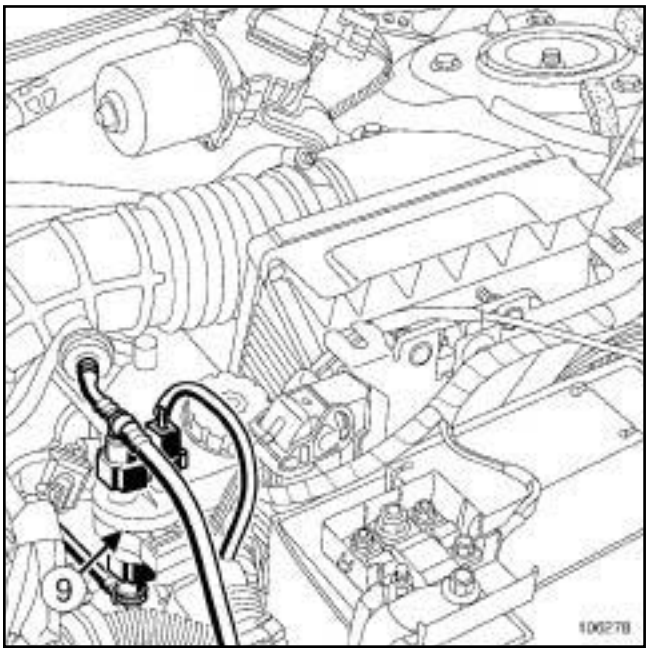

106278

❑ Remove the fuel vapour recirculation solenoid valve (**9**) .

B84 or C84 or G84 or S84, and F4R, and 770 or 771 or 776

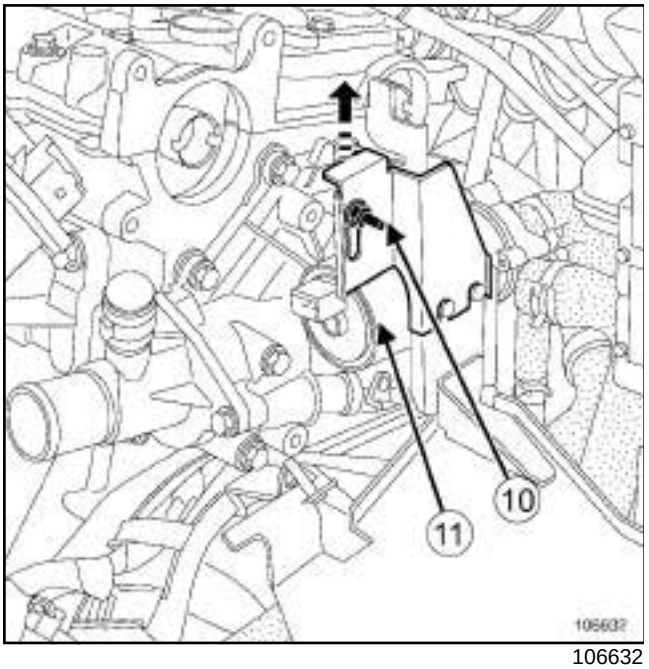

106632

- Loosen the nut (**10**) .
- Pull the mounting bracket away from the electric coolant pump.
- Move the electric coolant pump (**11**) to one side.
- Disconnect the mounting bracket from the wiring harness.

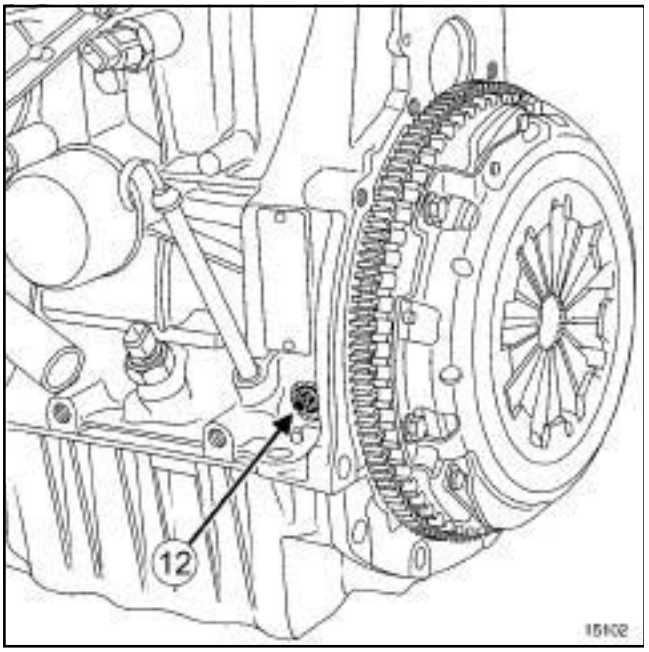

15102

- Remove the TDC setting pin plug (**12**) .

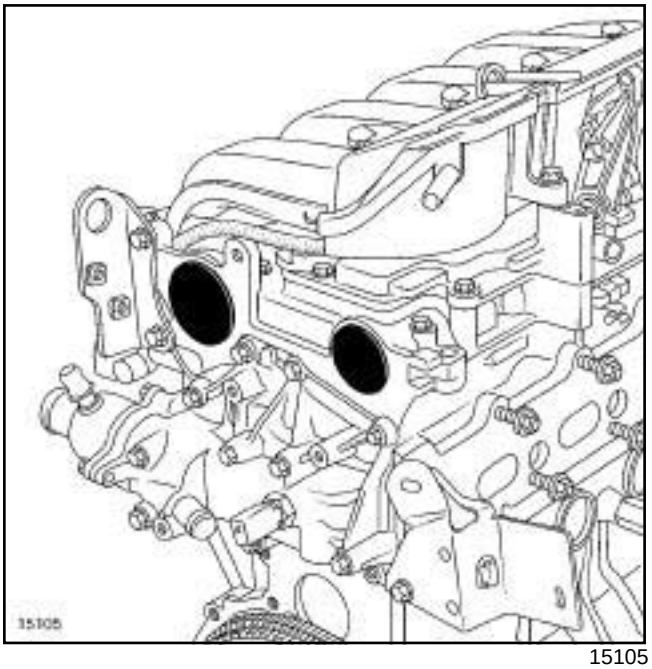

15105

- Remove the camshaft sealing plugs.

I - ADJUSTING THE TIMING

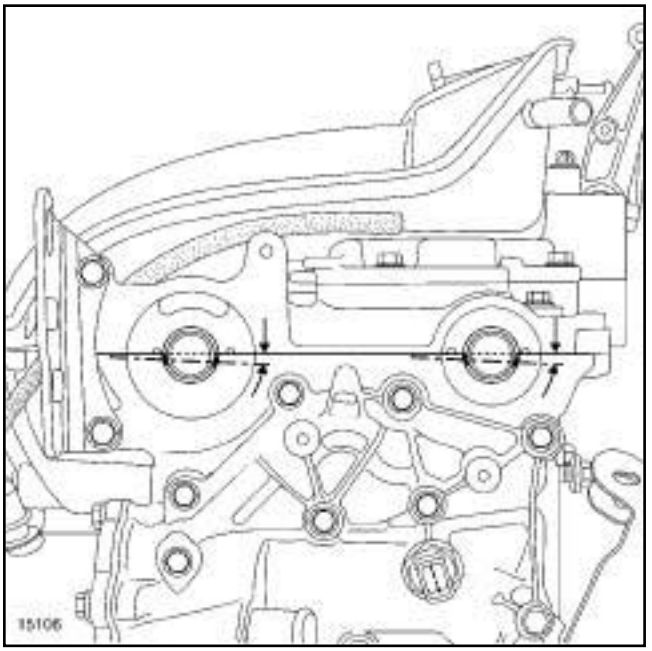

15106

- Rotate the engine clockwise (timing end) so that the camshaft grooves are offset below the centre line and almost horizontal, as shown in the drawing.
- Insert the TDC setting pin **(Mot. 1054)** so that it is between the balancing hole and the crankshaft setting groove.

B84 or C84 or G84 or S84, and F4R, and 770 or 771 or 776

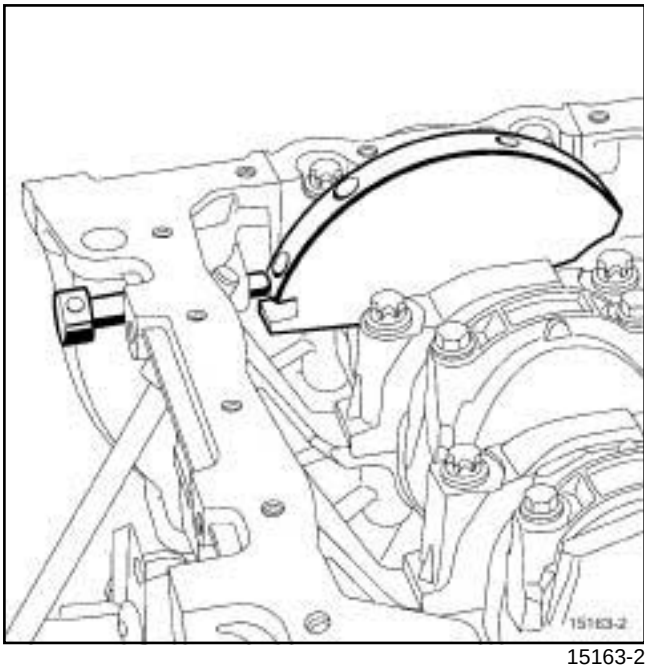

15163-2

❑ Carefully turn the engine in the same direction, inserting the TDC setting pin **(Mot. 1054)** as far as the setting point.

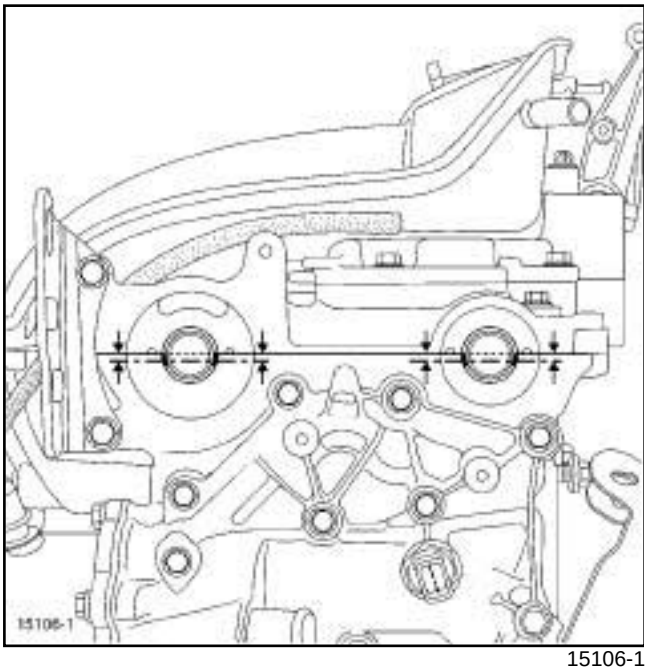

15106-1

❑ At the setting point, the camshaft grooves must be horizontal and offset below the centre line, as shown in the drawing.

Correct position

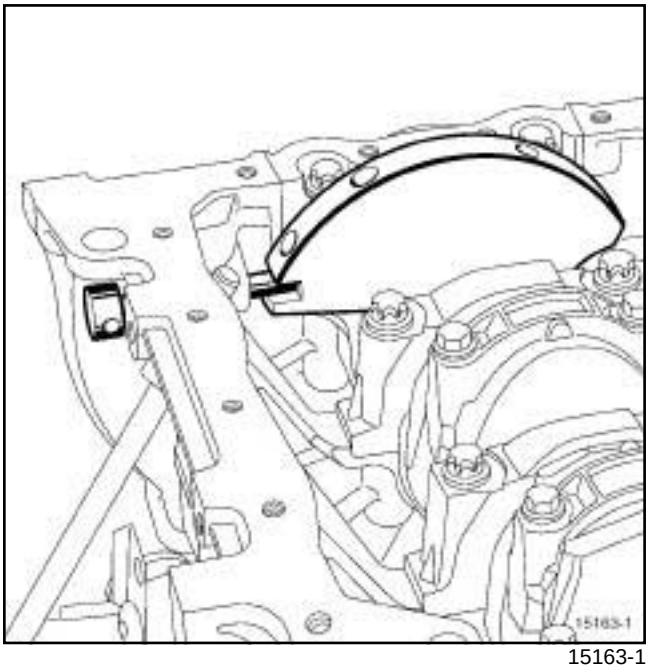

15163-1

Incorrect position

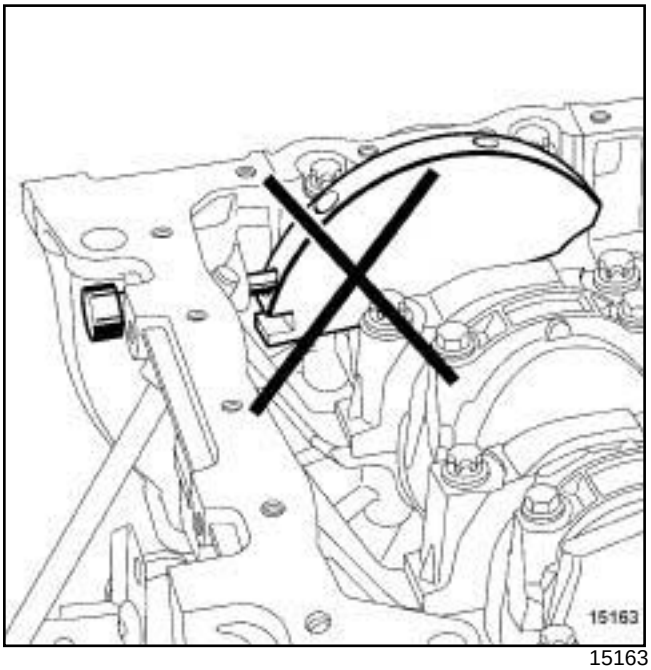

15163

❑ Remove the TDC setting pin **(Mot. 1054)**.

B84 or C84 or G84 or S84, and F4R, and 770 or 771 or 776

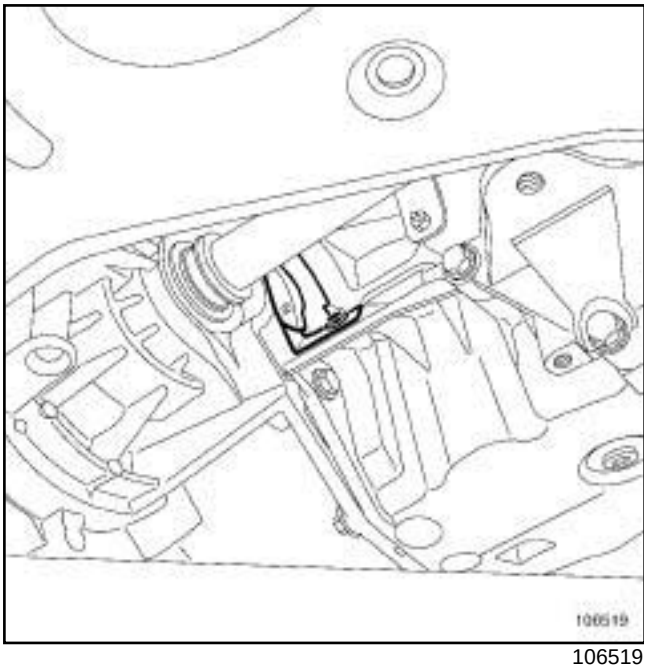

106519

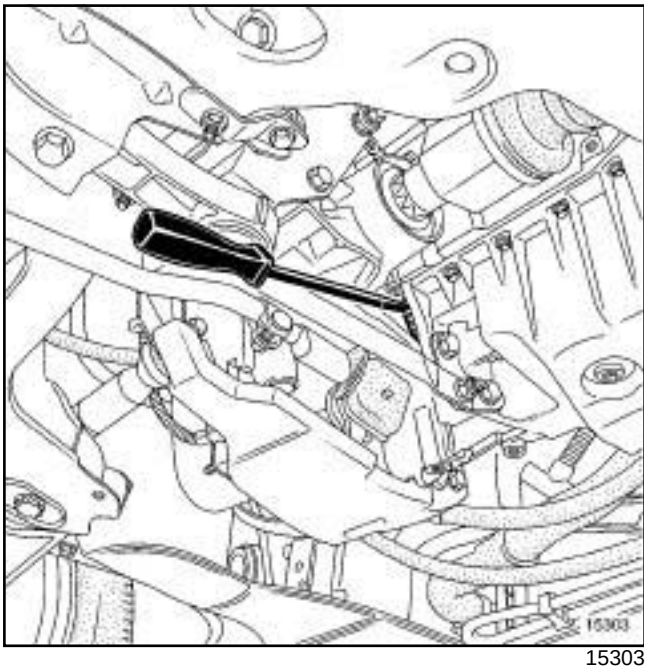

15303

❑ Remove:

- the engine flywheel guard,
- the crankshaft pulley, locking the flywheel with a screwdriver.

❑ Refit the TDC setting pin **(Mot. 1054)**.

B84 or C84 or G84 or S84, and F4R, and 770 or 771 or 776

F4R, and 770 or 771

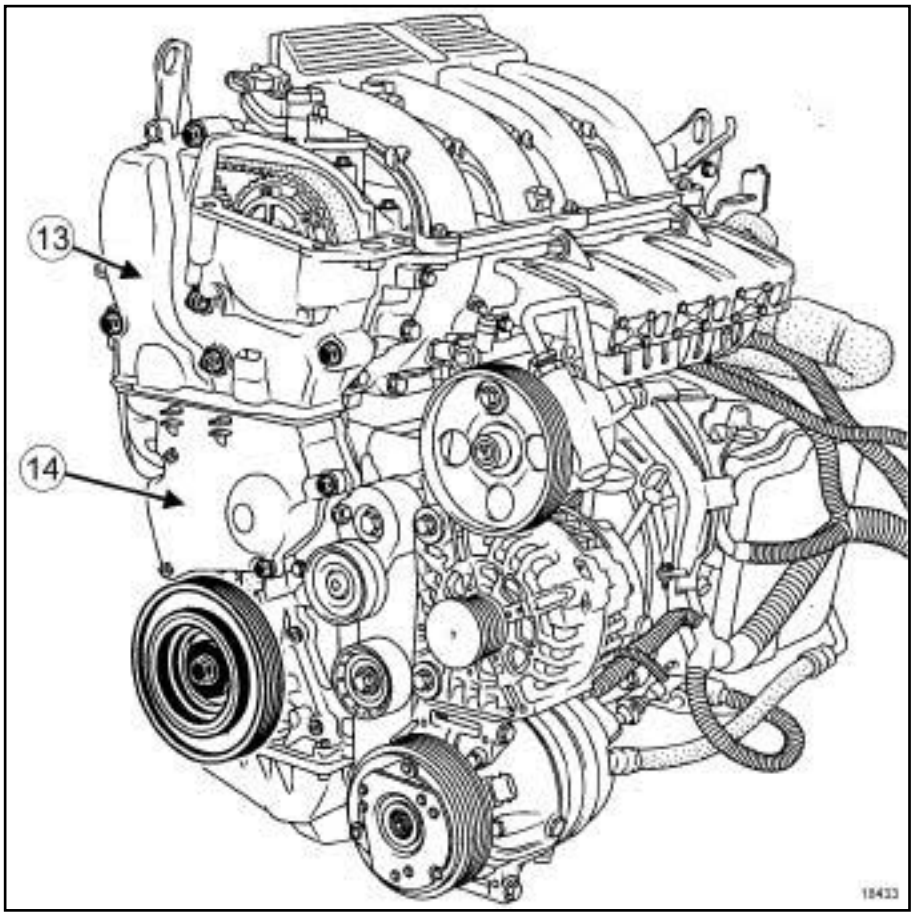

18433

❑ Remove:

- the upper timing cover (**13**) ,
- the lower timing cover (**14**) .

B84 or C84 or G84 or S84, and F4R, and 770 or 771 or 776

F4R, and 776

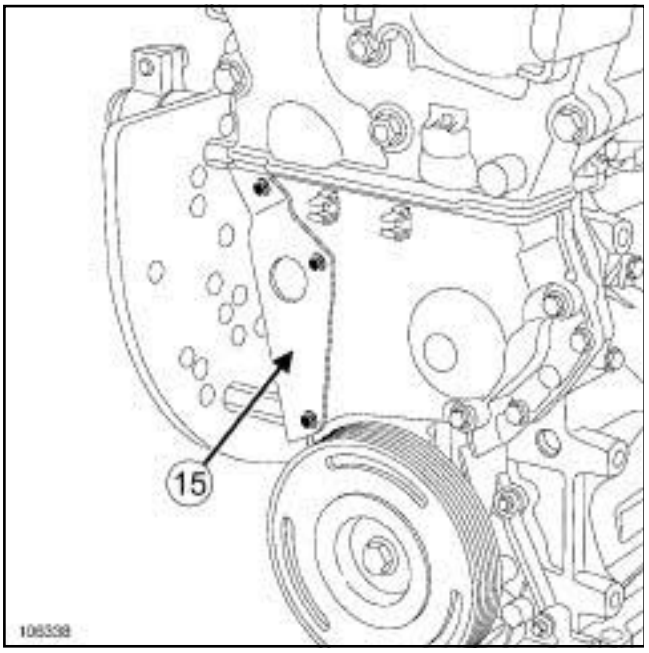

106338

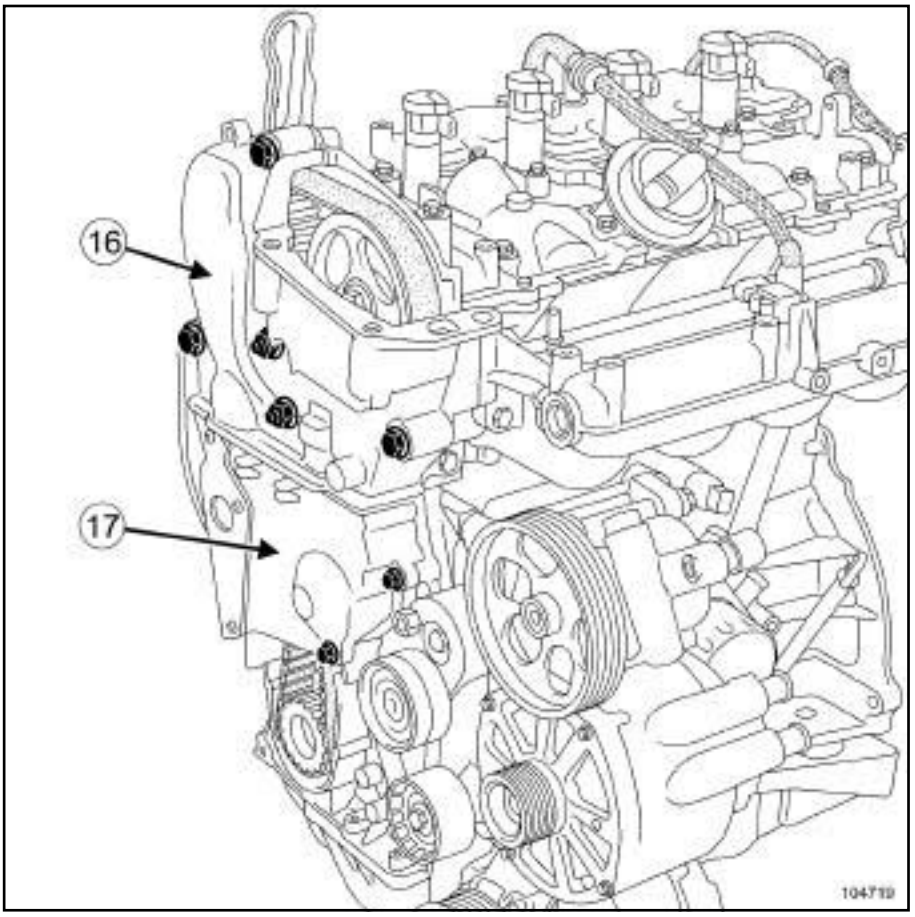

104719

❑ Remove:

- the heat shield (**15**) ,
- the upper timing cover (**16**) ,

B84 or C84 or G84 or S84, and F4R, and 770 or 771 or 776

- the lower timing cover (**17**) .

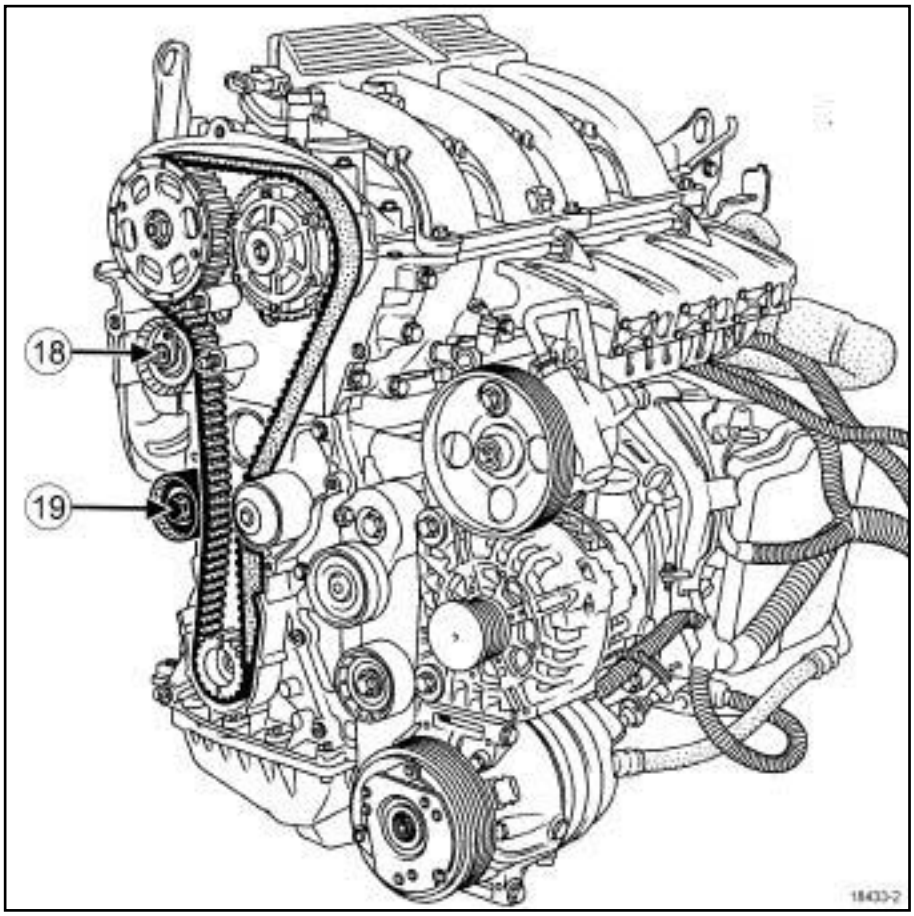

18433-2

❑ Slacken the timing belt by undoing the tensioning roller nut (**18**) .

❑ Remove:

- the fixed roller (**19**) ,
- the timing belt,
- the crankshaft timing sprocket.

WARNING
When replacing the timing belt, be sure to replace the tension wheel and rollers.

WARNING
A belt which has been removed MUST be replaced.

WARNING
Never turn the engine in the opposite direction to its normal operating direction.

B84 or C84 or G84 or S84, and F4R, and 770 or 771 or 776

II - ADJUSTING THE TIMING

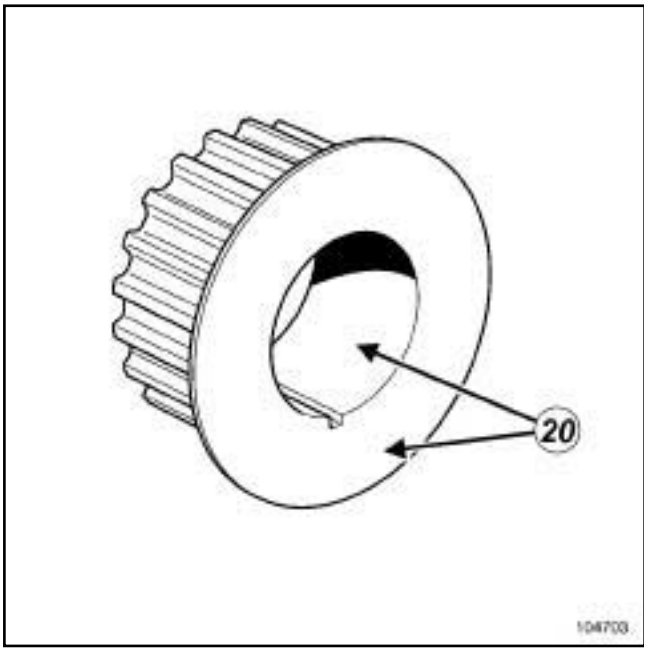

104703

❑

WARNING

Always degrease:

- the end of the crankshaft (timing end),
- the timing sprocket bore and contact surfaces (**20**) ,
- the bearing faces of the crankshaft accessories pulley,

This is to prevent slippage between the timing gear and the crankshaft.

This slippage causes engine damage.

WARNING

Never turn the engine in the opposite direction to its normal operating direction.

WARNING

In this case, the old camshaft pulley nuts must be removed in order to correctly set the belt tension.

B84 or C84 or G84 or S84, and F4R, and 770 or 771 or 776

F4R, and 770 or 771

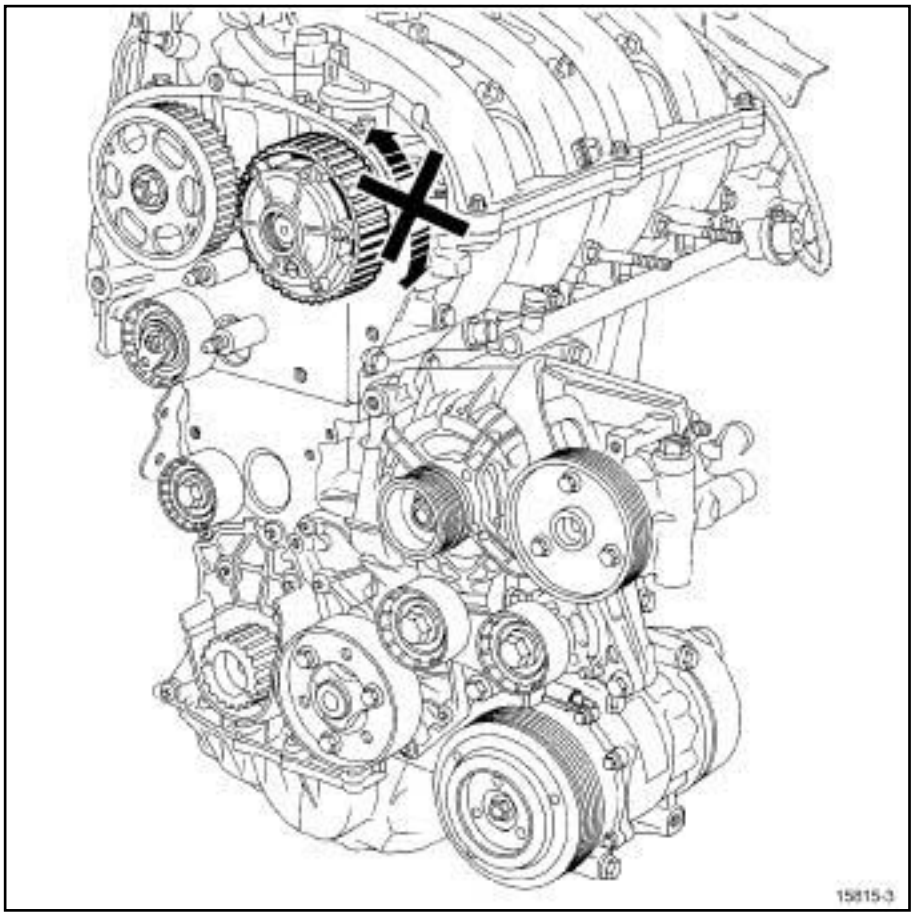

15815-3

- Check that the camshaft dephaser wheel is correctly locked (no rotation of the wheel to the left or to the right).

B84 or C84 or G84 or S84, and F4R, and 770 or 771 or 776

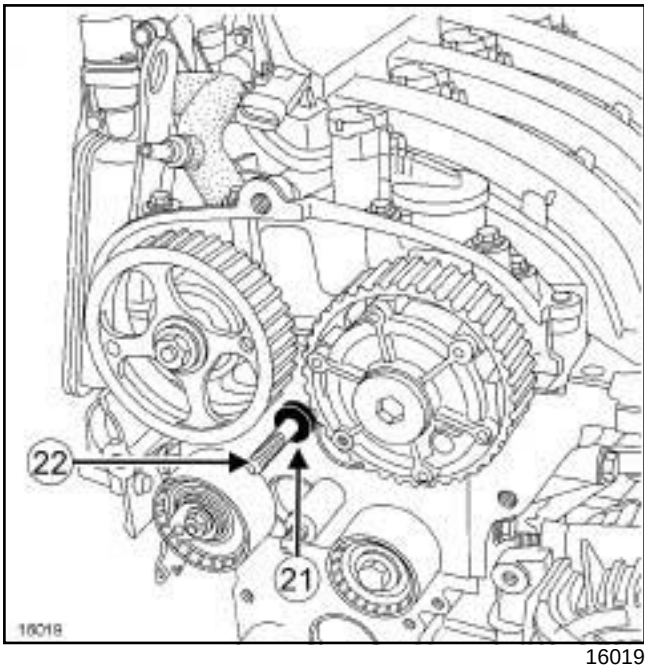

16019

- ❑ Fit the **(Mot. 1509)** with the sprocket **(Mot. 1509-01)**.
- ❑ Fit the spacer (**21**) of tool **(Mot. 1509-01)** on the stud (**22**) .

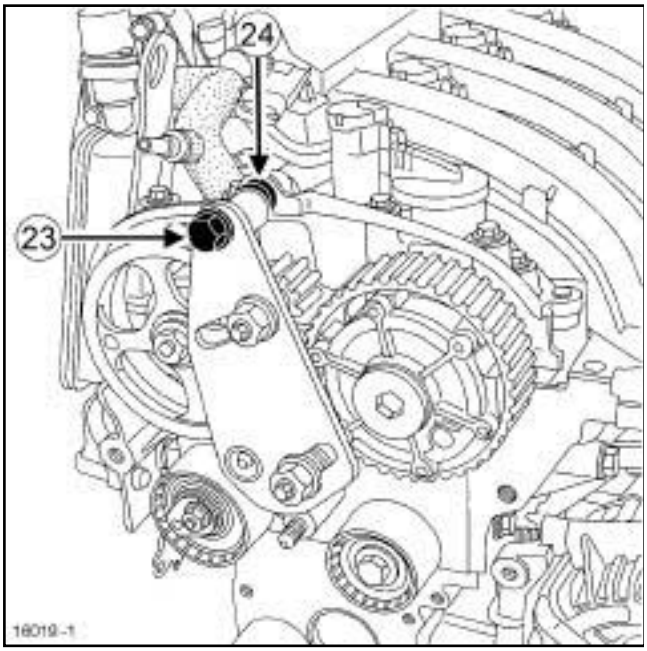

16019-1

- ❑ Fit the upper bolt (**23**) while positioning the spacer (**24**) **(Mot. 1509-01)** between the tool and the rocker cover (do not tighten the bolt).

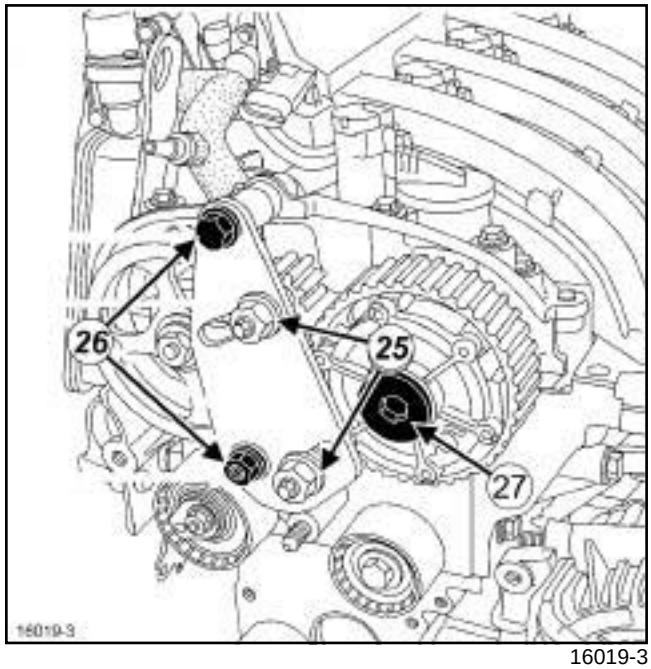

16019-3

- ❑ Tighten the bolt and the collar nut (**25**) .
- ❑ Bring the toothed sprockets of the **(Mot. 1509)** into contact with the camshaft pulleys.
- ❑ Tighten the **toothed sprocket nuts (80 Nm)** (**26**) .
- ❑ Remove:
  - the inlet camshaft dephaser blanking cover (**27**) ,
  - the inlet camshaft dephaser mounting bolt,
  - the exhaust camshaft pulley nut,
  - the **(Mot. 1509)**,
  - the camshaft pulleys.
- ❑ Undo the stud with the nut, if necessary (see **11A**, **Top and front of engine**, **Camshaft: Removal - Refitting**, page **11A-172**) (Technical Note 3884A, 10A, Top and front of engine).

B84 or C84 or G84 or S84, and F4R, and 770 or 771 or 776

F4R, and 776

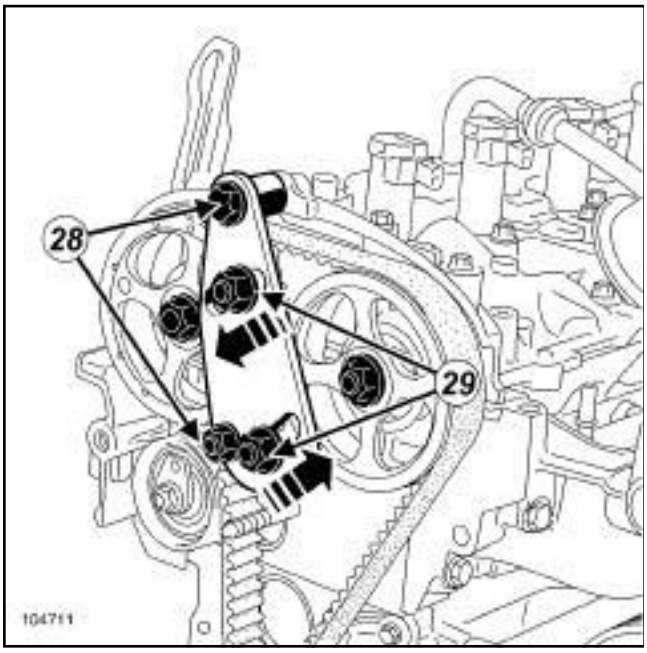

104711

- ❑ Fit the **(Mot. 1509)** with the toothed sprocket **(Mot. 1509-01)**.
- ❑ Tighten the bolt and the shouldered nut (**28**) .
- ❑ Bring the toothed sprockets into contact with the camshaft pulleys.
- ❑ Tighten the **toothed sprocket nuts (80 Nm)** (**29**) .
- ❑ Remove:
  - the camshaft pulley nuts,
  - the **(Mot. 1509)**,
  - the camshaft pulleys.
- ❑ Undo the stud with the nut, if necessary (see **11A**, **Top and front of engine**, **Camshaft: Removal - Refitting**, page **11A-172**) (Technical Note 3884A, 10A, Top and front of engine).
- ❑ Refit the degreased camshaft pulleys with the old mountings.
- ❑ Torque tighten the old mountings to **(15 Nm max)** using the **(Mot. 799-01)**.

WARNING

When removing the timing belt, it is essential to replace:

- the crankshaft accessories pulley,
- the tensioning roller and fixed roller,
- the accessories and timing belts.

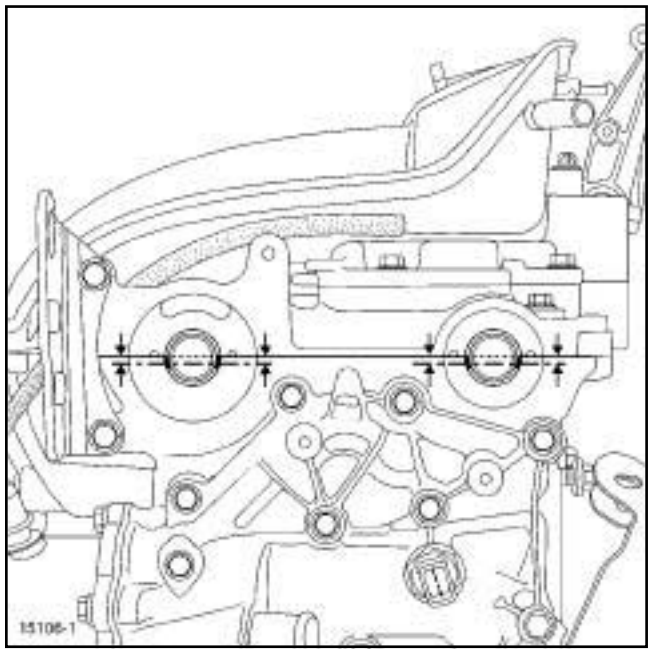

15106-1

- ❑ Position the grooves offset horizontally below the centre-line as shown above by turning the camshafts using the **(Mot. 799-01)**.

B84 or C84 or G84 or S84, and F4R, and 770 or 771 or 776

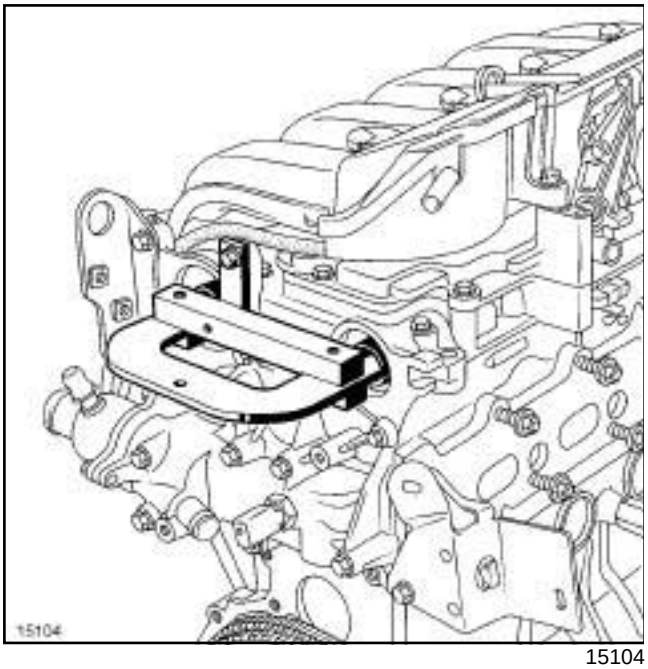

15104

❑ Position the **(Mot. 1496)**, attaching it to the end of the camshafts.

F4R, and 770 or 771

❑ Undo:

- the exhaust camshaft pulley nut,
- the inlet camshaft dephaser pulley bolt,

F4R, and 776

❑ Loosen the camshaft pulley nuts.

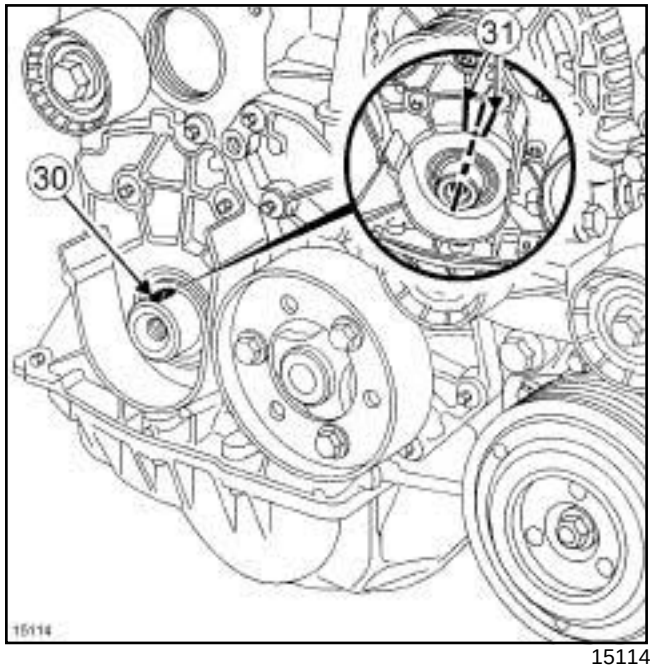

15114

Correct position

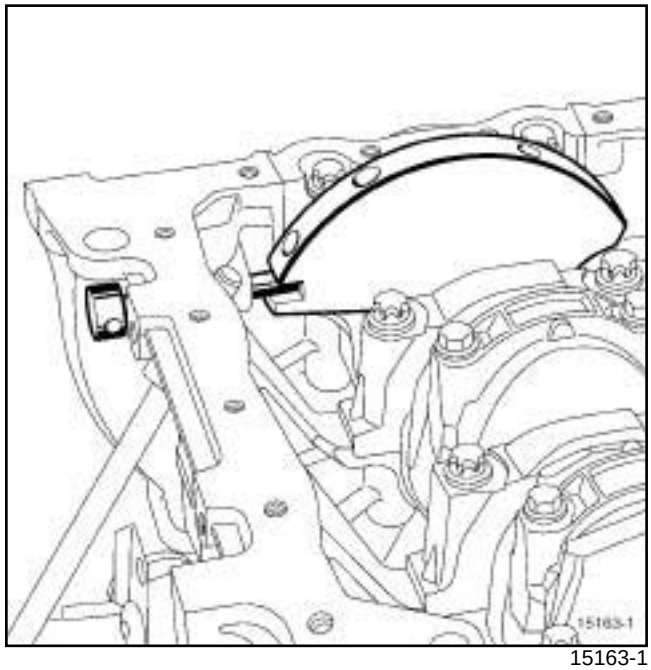

15163-1

❑

WARNING

Check that the crankshaft is correctly centred.

The crankshaft groove (**30**) must be between the two ribs (**31**) .

B84 or C84 or G84 or S84, and F4R, and 770 or 771 or 776

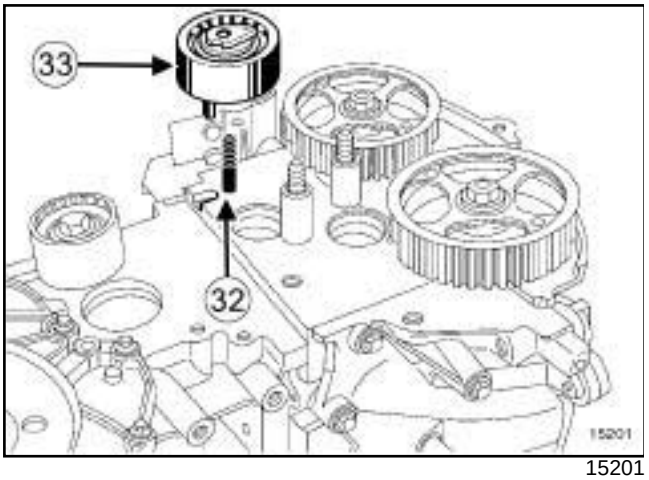

15201

❑ Refit the tensioning roller, correctly positioning (**32**) of the tensioning roller in the groove (**33**) .

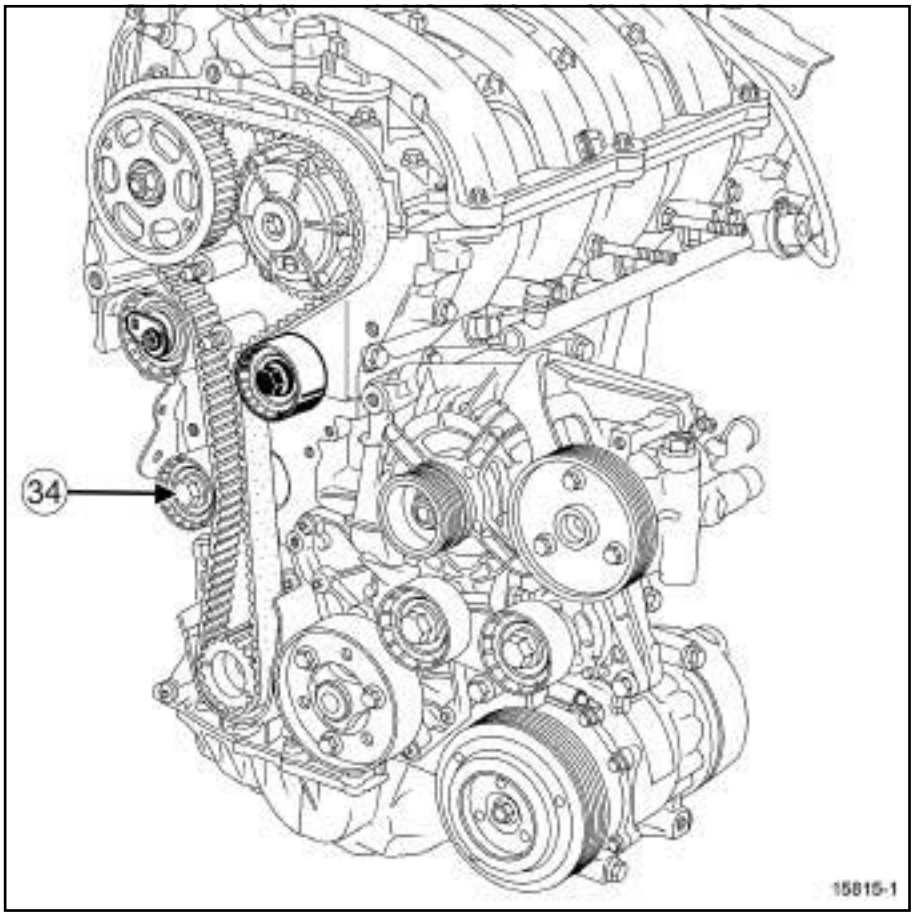

15815-1

❑ Refit:

- the timing sprocket,
- the timing belt,
- the fixed roller (**34**) .

❑ Torque tighten the **fixed roller mounting bolt (50 Nm)**.

B84 or C84 or G84 or S84, and F4R, and 770 or 771 or 776

III - ADJUSTING THE TENSION

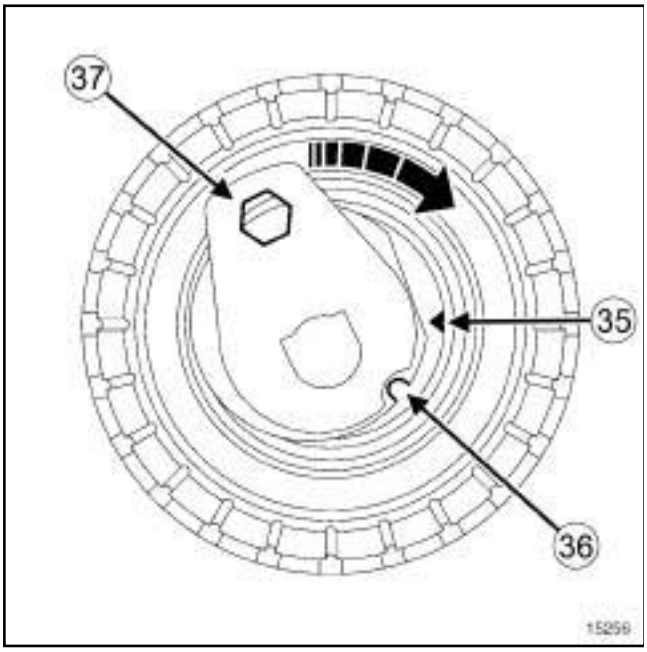

15256

❑

> Note:
>
> Do not rotate the tensioning roller anticlockwise.

❑ Align the marks (**35**) and (**36**) of the tensioning roller using a **6 mm** Allen key at (**37**) .

❑ Torque tighten the **tensioning roller nut (7 Nm)**.

F4R, and 770 or 771

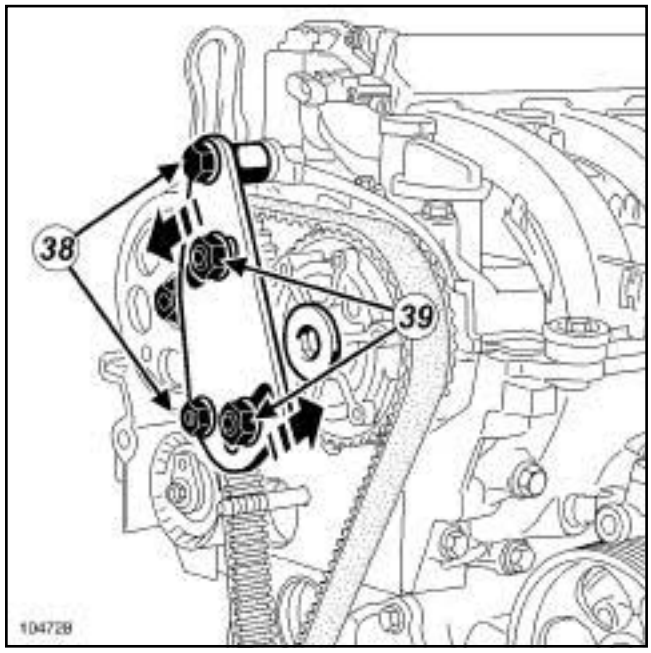

104728

❑ Fit the **(Mot. 1509)** with the toothed sprocket **(Mot. 1509-01)** to lock the camshaft pulleys.

❑ Tighten the bolt and the shouldered nut (**38**) .

❑ Bring the toothed sprocket nuts into contact with the camshaft pulleys.

❑ Torque tighten:

- the **toothed sprocket nuts (80 Nm)** (**39**) ,
- the **old inlet camshaft dephaser mounting bolt (30 Nm)**,
- the **old exhaust camshaft pulley nut (30 Nm)**.

❑ Remove the **(Mot. 1509)** fitted with the **(Mot. 1509-01)**.

B84 or C84 or G84 or S84, and F4R, and 770 or 771 or 776

F4R, and 776

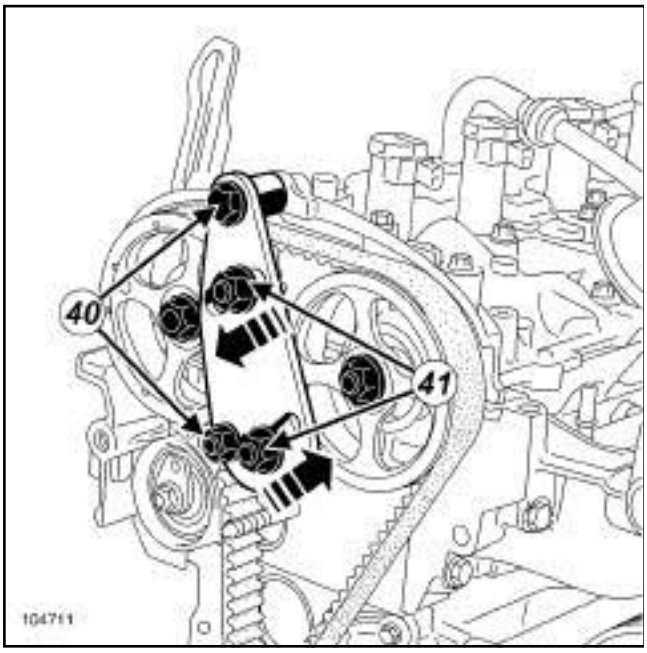

104711

- ❑ Fit the camshaft pulley setting tool **(Mot. 1509)**.
- ❑ Tighten the bolt and collar nut (**40**) .
- ❑ Bring the toothed sprocket nuts into contact with the camshaft pulleys.
- ❑ Torque tighten:
  - the **toothed sprocket nuts (80 Nm)** (**40**) ,
  - the **old inlet and exhaust camshaft pulley nuts (30 Nm)** (**41**) ,
- ❑ Remove the **(Mot. 1509)** fitted with the **(Mot. 1509-01)**.

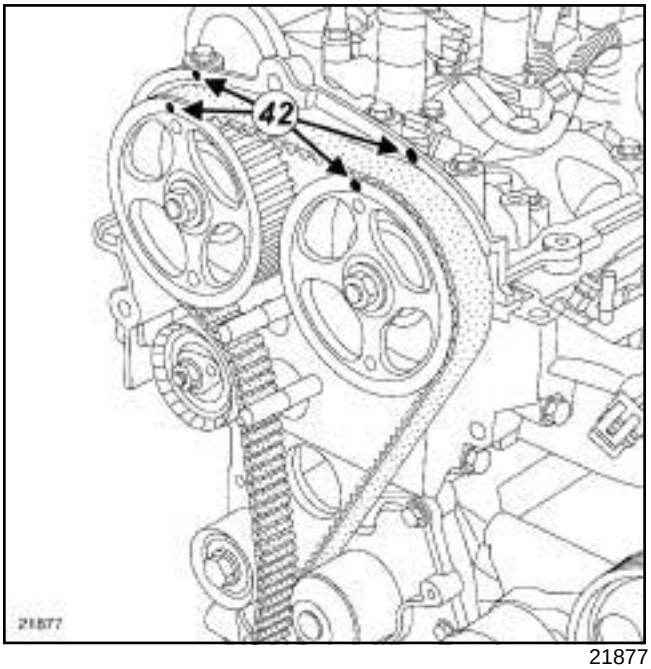

21877

- ❑ Make a pencil mark (**42**) between the camshaft pulleys and the camshaft bearing plug.
- ❑ Remove the following tools:
  - TDC setting pin **(Mot. 1054)**,
  - camshaft setting tool **(Mot. 1496)**.
- ❑ Rotate the crankshaft clockwise through two revolutions (timing end).

B84 or C84 or G84 or S84, and F4R, and 770 or 771 or 776

IV - CHECKING THE TIMING AND THE TENSION

1 - Checking the tension

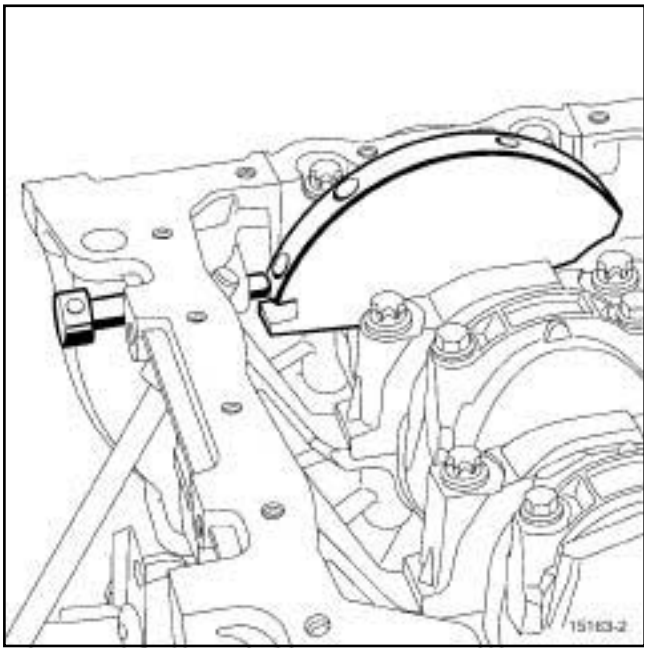

15163-2

❑ Before the end of the second revolution (i.e. half a tooth before alignment of the marks made previously by the operator), insert the crankshaft TDC setting pin **(Mot. 1054)** (so that it is between the balancing hole and the timing hole).

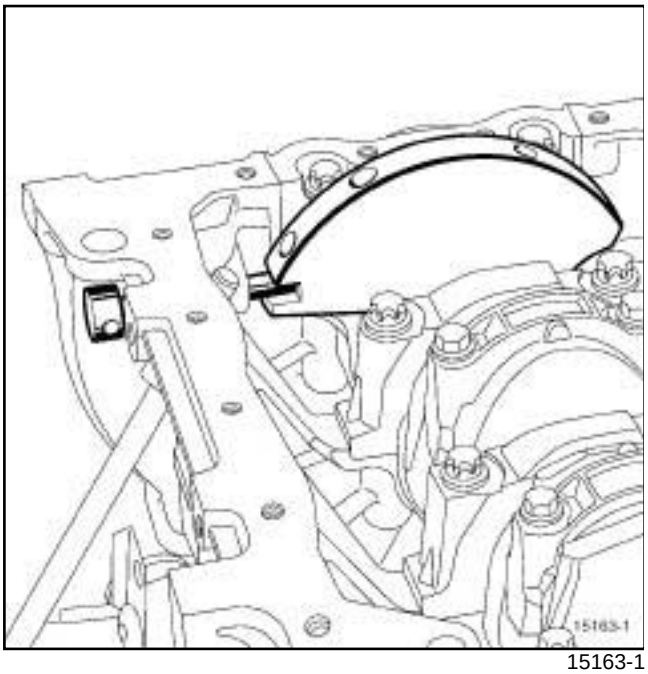

15163-1

❑ Bring the timing to its setting point.

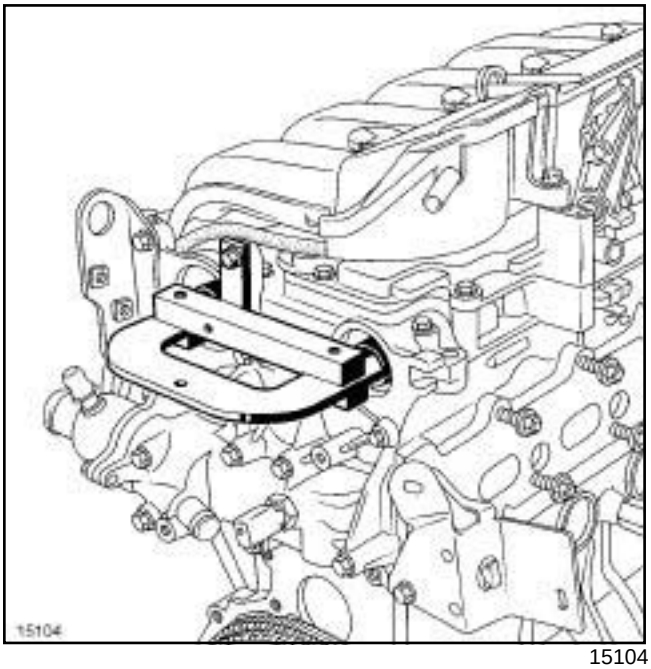

15104

❑ Position the camshaft setting tool **(Mot. 1496)**.

B84 or C84 or G84 or S84, and F4R, and 770 or 771 or 776

F4R, and 770 or 771

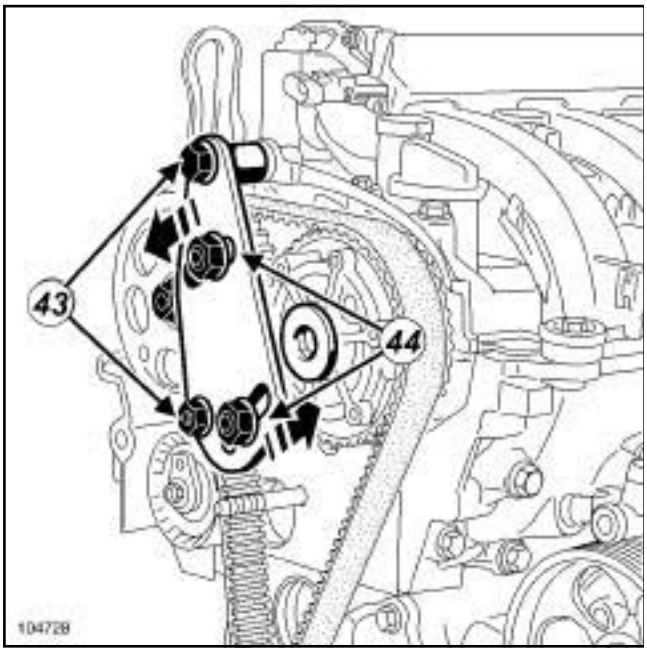

104728

- ❑ Fit the **(Mot. 1509)** with the toothed sprocket **(Mot. 1509-01)** for locking the camshaft pulleys.
- ❑ Tighten the bolt and collar nut (**43**) .
- ❑ Offer up the sprocket nuts against the camshaft pulleys.
- ❑ Tighten the **toothed sprocket nuts (80 Nm)** (**44**) .
- ❑ Undo:
  - the old inlet camshaft dephaser pulley mounting bolt,
  - the old exhaust camshaft pulley nut.
- ❑ Remove the **(Mot. 1509)** fitted with a sprocket **(Mot. 1509-01)** for locking the camshaft pulleys.

F4R, and 776

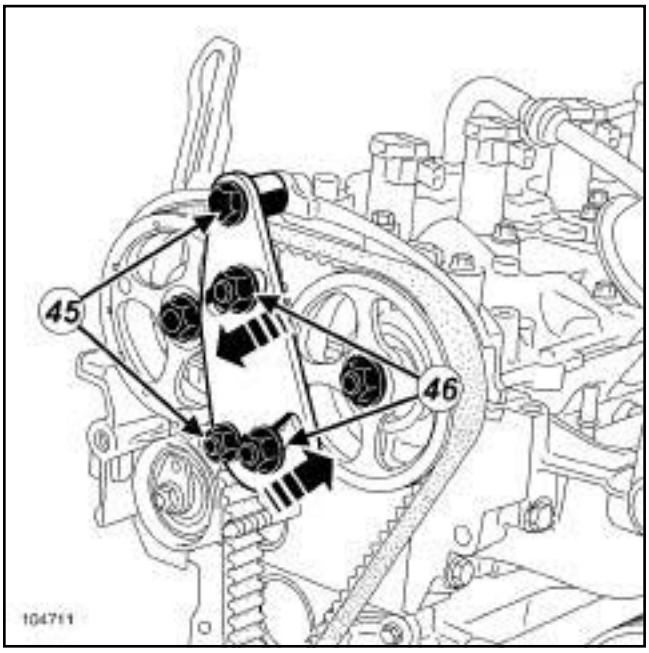

104711

- ❑ Fit the camshaft pulley locking tool **(Mot. 1509)**.
- ❑ Tighten the bolt and collar nut (**45**) .
- ❑ Offer up the sprocket nuts against the camshaft pulleys.
- ❑ Tighten the **toothed sprocket nuts (80 Nm)** (**46**) .
- ❑ Undo:
  - the old inlet camshaft pulley nut,
  - the old exhaust camshaft pulley nut.
- ❑ Remove the camshaft pulley locking tool **(Mot. 1509)**.

B84 or C84 or G84 or S84, and F4R, and 770 or 771 or 776

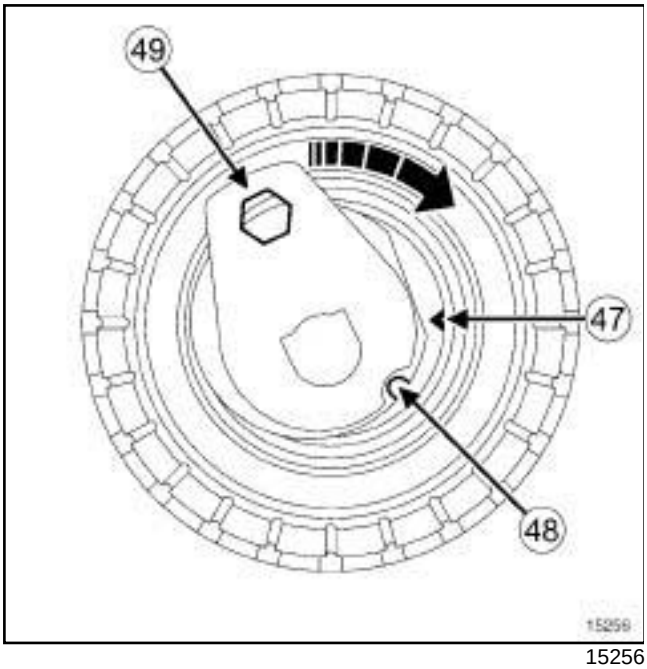

15256

- Align mark (**47**) with mark (**48**) by loosening the tensioning roller nut a maximum of one turn, holding it with a **6 mm** Allen key (**49**) .
- Fully tighten the **tensioning roller nut (28 Nm)**.

B84 or C84 or G84 or S84, and F4R, and 770 or 771 or 776

F4R, and 770 or 771

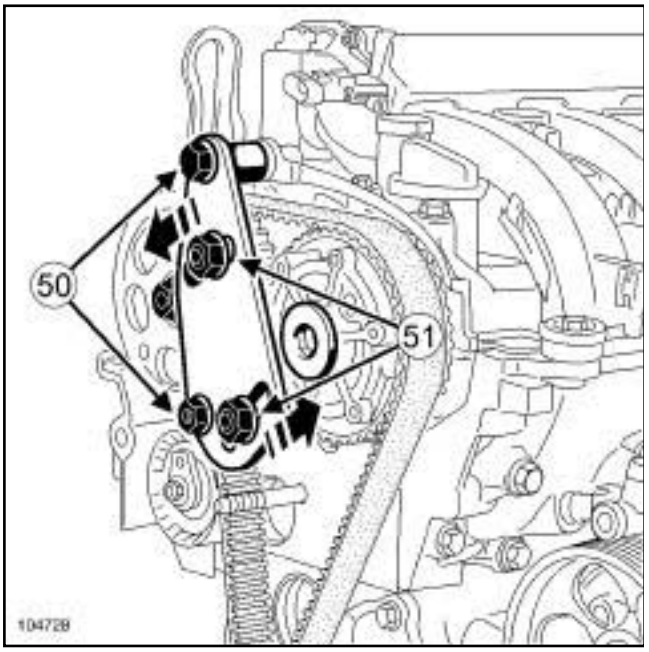

104728

- ❑ Position the **(Mot. 1509)** fitted with the toothed sprocket for locking the camshaft pulleys.
- ❑ Tighten the bolt and collar nut (**50**) .
- ❑ Bring the toothed sprocket nuts into contact with the camshaft pulleys.
- ❑ Tighten the **toothed sprocket nuts (80 Nm)** (**51**) .
- ❑ Remove:
  - the old inlet camshaft pulley dephaser bolt,
  - a new nut on the exhaust camshaft pulley.
- ❑ Refit:
  - a new bolt on the inlet camshaft pulley,
  - a new nut on the exhaust camshaft pulley.
- ❑ Torque tighten:
  - the **inlet camshaft dephaser mounting bolt (30 Nm)**,
  - the **exhaust camshaft pulley nut (30 Nm)**.
- ❑ Remove the camshaft setting tool **(Mot. 1496)**.
- ❑ Torque tighten:
  - the **inlet camshaft dephaser mounting bolt (100 Nm)**,
  - the **camshaft pulley dephaser blanking cover (25 Nm)**
- ❑ Angle tighten the **exhaust camshaft pulley nut (86° ± 6°)**.
- ❑ Remove the following tools:
  - TDC setting pin **(Mot. 1054)**,
  - camshaft pulley locking tool **(Mot. 1509)** with toothed sprockets **(Mot. 1509-01)**.
- ❑ Rotate the crankshaft clockwise through two revolutions (timing end).

B84 or C84 or G84 or S84, and F4R, and 770 or 771 or 776

F4R, and 776

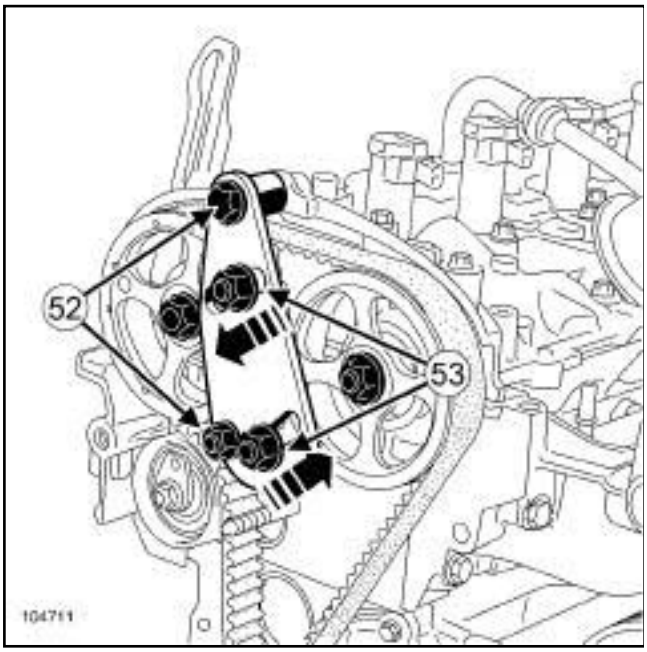

104711

- ❑ Fit the camshaft pulley locking tool **(Mot. 1509)**.
- ❑ Tighten the bolt and collar nut (**52**) .
- ❑ Bring the toothed sprocket nuts into contact with the camshaft pulleys.
- ❑ Tighten the **toothed sprocket nuts (80 Nm)** (**53**) .
- ❑ Remove:
  - the old inlet camshaft pulley nut,
  - the old exhaust camshaft pulley nut.
- ❑ Refit a new nut onto the inlet and exhaust camshaft pulley.
- ❑ Torque tighten the **inlet and exhaust camshaft pulley nut 30 Nm**.
- ❑ Remove the camshaft setting tool **(Mot. 1496)**.
- ❑ Angle tighten the **inlet and exhaust camshaft pulley nut (86° ± 6°)**.
- ❑ Remove the following tools:
  - TDC setting pin **(Mot. 1054)**,
  - camshaft pulley locking tool **(Mot. 1509)**.
- ❑ Rotate the crankshaft clockwise through two revolutions (timing end).

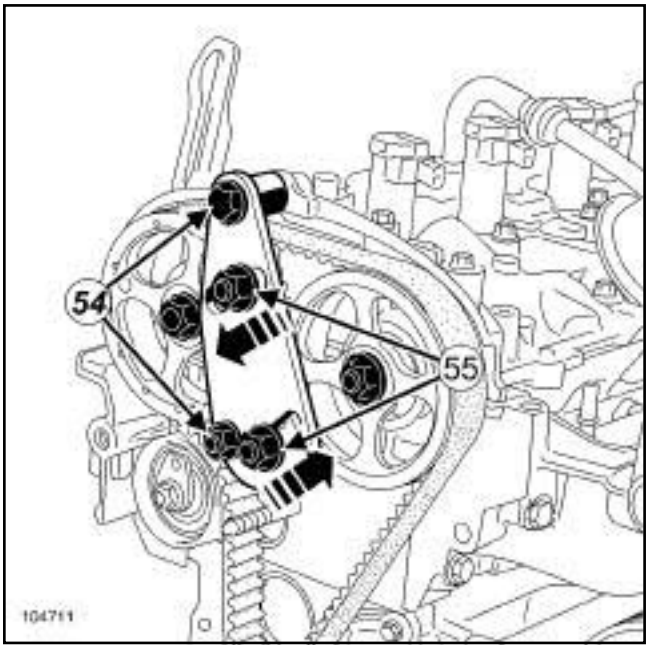

104711

- ❑ Fit the camshaft locking tool **(Mot. 1509)** while tightening the **nuts (80 Nm)** (**54**) .
- ❑ Tighten the bolt and the shouldered nut (**55**) .
- ❑ Remove the old camshaft pulley nuts and replace them with new ones.
- ❑ Torque and angle tighten the **inlet and exhaust camshaft pulley nuts (30 Nm + 86° ± 6°)**.
- ❑ Remove the following tools:
  - the **(Mot. 1496)**,
  - camshaft pulley locking tool **(Mot. 1509)**.
  - the TDC setting pin **(Mot. 1054)**.
- ❑ Rotate the crankshaft clockwise through two revolutions.

B84 or C84 or G84 or S84, and F4R, and 770 or 771 or 776

2 - Checking the timing

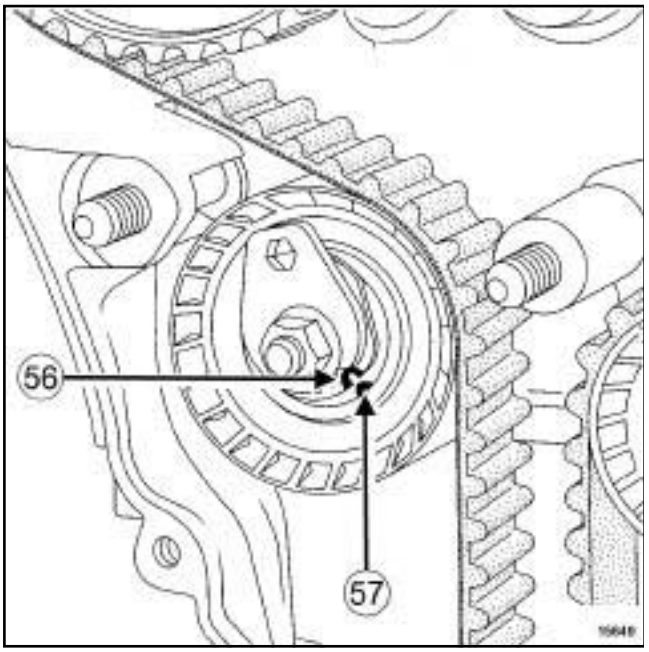

15649

❑ Before the end of the second revolution (i.e. half a tooth before alignment of the marks made previously by the operator), insert the crankshaft TDC setting pin (**(Mot. 1054)** so that it is between the balancing hole and the timing hole).

❑ Check that mark (**56**) is aligned with mark (**57**) on the tensioning roller before checking the timing adjustment.

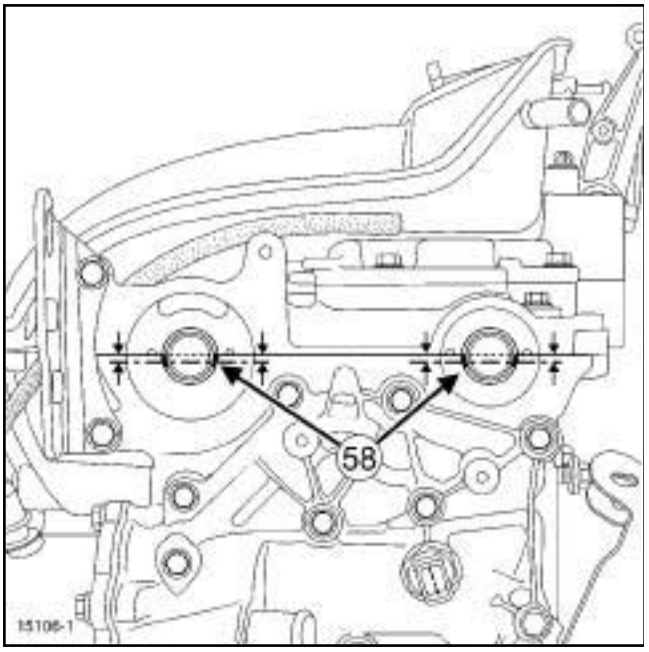

15106-1

❑ The offset grooves (**58**) must be aligned horizontally below the centreline.

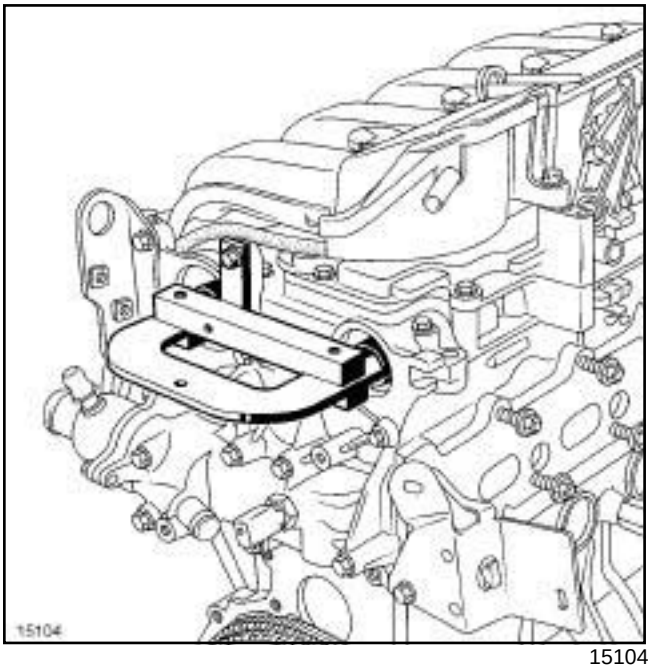

15104

❑ Position the camshaft setting tool **(Mot. 1496)** without forcing it. If the tool does not engage, repeat the timing and tension setting procedure.

REFITTING

❑ Refit:

- the lower timing cover,
- the upper timing cover.

WARNING
The crankshaft accessories pulley and bolt must be replaced.

B84 or C84 or G84 or S84, and F4R, and 770 or 771 or 776

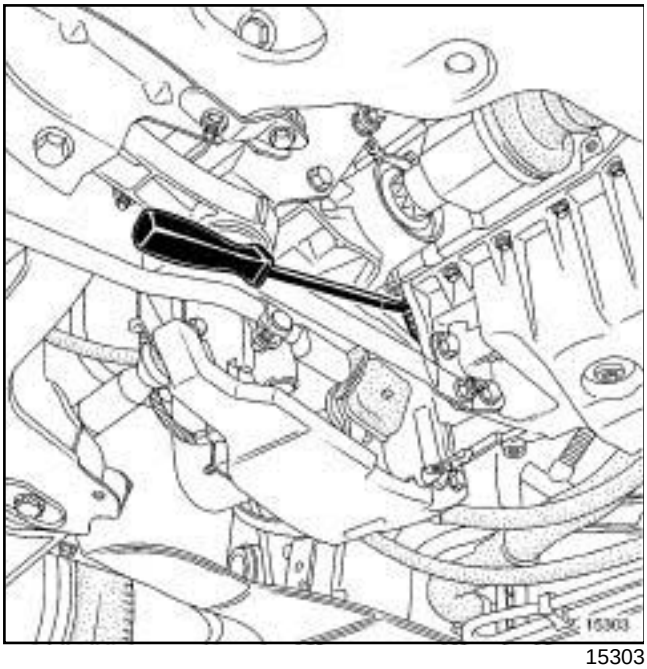

15303

❑ Lock the flywheel using a large screwdriver.

❑ Torque and angle tighten the **crankshaft accessories pulley bolt (40 Nm + 110° ± 10°)**.

> **WARNING**
> To avoid damaging the crankshaft accessories pulley, do not start the engine without the accessories belt.

❑ Refit:

- the crankshaft accessories belt (see **11A**, **Top and front of engine**, **Accessories belt: Removal - Refitting**, page **11A-4**) ,
- the TDC pin plug, applying a drop of **RHODORSEAL 5661** to the thread hole.

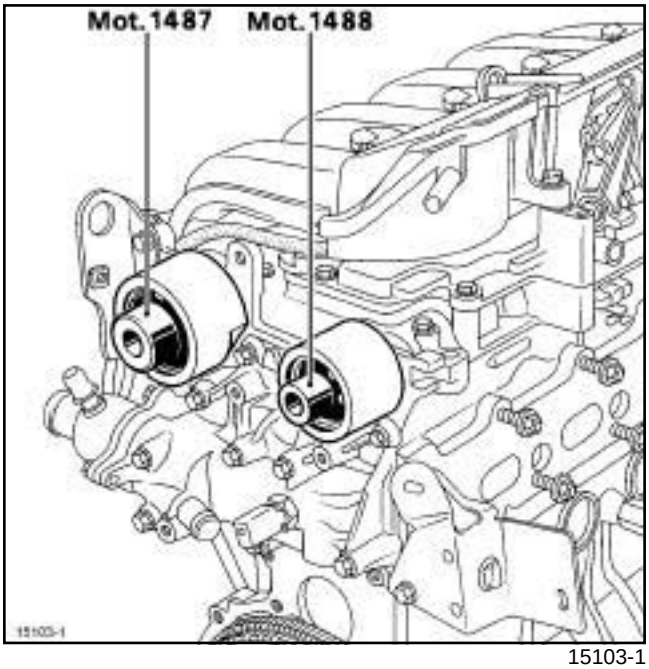

15103-1

❑ Refit:

- new sealing plugs:
  - to the inlet camshaft **(Mot. 1487)**,
  - on the exhaust camshaft **(Mot. 1448)**,
- the right-hand suspended engine mounting (see **19D**, **Engine mounting**, **Right-hand suspended engine mounting: Removal - Refitting**, page **19D-20**) , in accordance with the marks.

❑ Proceed in the reverse order to removal.

❑ Torque tighten:

- the **lower timing cover M6 bolts (80 Nm)**,
- the **lower timing cover M8 bolts (20 Nm)**,
- the **upper timing cover M8 bolts (18 Nm)**,
- the **upper timing cover M10 bolts (38 Nm)**,
- the **wheel bolts (110 Nm)**,
- the **battery cover bolts (4 Nm)**.

❑ Connect the battery (see **Battery : Removal - Refitting**) (MR 364, 80A, Battery).

B84 or C84 or G84 or S84, and K9K, and 732 or 734

Essential special tooling	
Mot. 1453	Multiple-adjusting engine mounting support with retaining straps.
Mot. 1489	TDC locating pin.
Mot. 1430	Set of 5 crankshaft and camshaft pulley timing pins.

Tightening torques ▽	
camshaft pulley wheel bolts	**14 Nm**
tensioning roller bolt	**27 Nm**
camshaft pulley wheel bolts	**14 Nm**
crankshaft pulley M14 bolt	**120 Nm + 95° ± 15°**
TDC pin plug	**20 Nm**
cylinder head suspended mounting bolts	**21 Nm**
ball joint bracket mounting bolts fitted with their springs	**21 Nm**

I - PRECAUTIONS FOR REPAIR

❑

IMPORTANT
Wear protective gloves during the operation.

WARNING
The belt must be replaced with a new one if it has been removed.

Never turn the engine in the opposite direction to its normal operating direction.

Do not run the engine without the accessories belt so as not to damage the crankshaft accessories pulley.

When replacing the belt, be sure to replace the tensioning rollers and fixed rollers.

II - PARTS AND CONSUMABLES FOR THE REPAIR

❑ Parts always to be replaced:

- timing belt,
- timing belt tensioning roller,
- crankshaft accessories pulley bolts.

❑ Consumables:

- silicone adhesive sealant (see **Vehicle: Parts and ingredients for the repairwork**) (MR 364, 04B, Products and Consumables).

III - EQUIPMENT REQUIRED

❑ Equipment:

- Protective gloves,
- large screwdriver,
- **14** female torx socket,
- **6 mm** Allen key,
- **18 mm** offset spanner,
- cylinder head bolt tightening gauge,
- torque wrench.

IV - REMOVAL

1 - REMOVAL PREPARATION OPERATION

❑ Position the vehicle on a two-post lift (see **Vehicle: Towing and lifting**) (MR 364, 02A, Lifting equipment).

❑ Disconnect the battery (see **Battery: Removal - Refitting**) (MR 364, 80A, Battery).

❑ Remove:

- the engine covers,
- the scuttle panel grille (see **Scuttle panel grille: Removal - Refitting**) (MR 365, 56A, Exterior equipment),
- the front right-hand wheel (see **Wheel: Removal - Refitting**) (MR 364, 35A, Wheels and tyres),
- the front section of the front right-hand wheel arch liner (see **Front wheel arch liner: Removal - Refitting**) (MR 365, 55A, Exterior protection),
- the engine undertray,
- the accessories belt (see **11A**, **Top and front of engine**, **Accessories belt: Removal - Refitting**, page **11A-4**) .

B84 or C84 or G84 or S84, and K9K, and 732 or 734

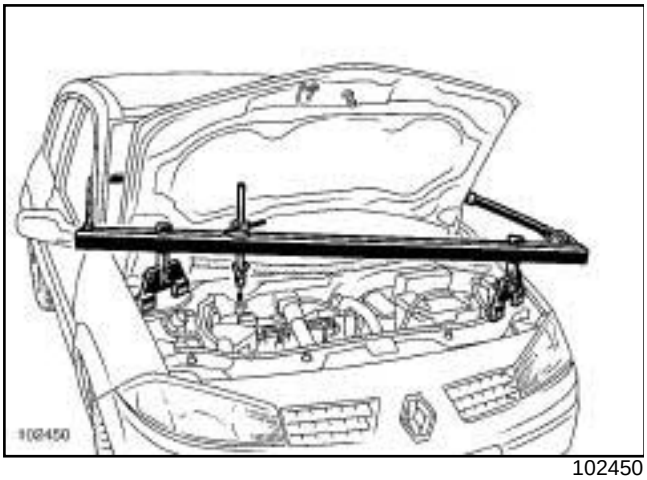

102450

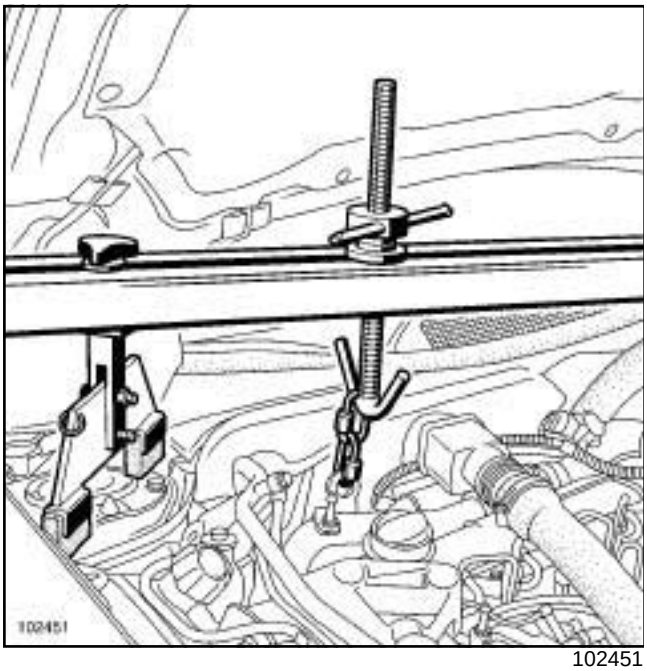

102451

❑ Fit the **(Mot. 1453)** with theand with retaining belts.

❑ Remove:

- the exhaust ball joint bracket mounting bolts,
- the rear suspended engine mounting (see **19D**, **Engine mounting**, **Lower engine tie-bar: Removal - Refitting**, page **19D-36**) .

❑ Unclip the manual priming pump.

WARNING
Be careful not to damage the air conditioning pipes.

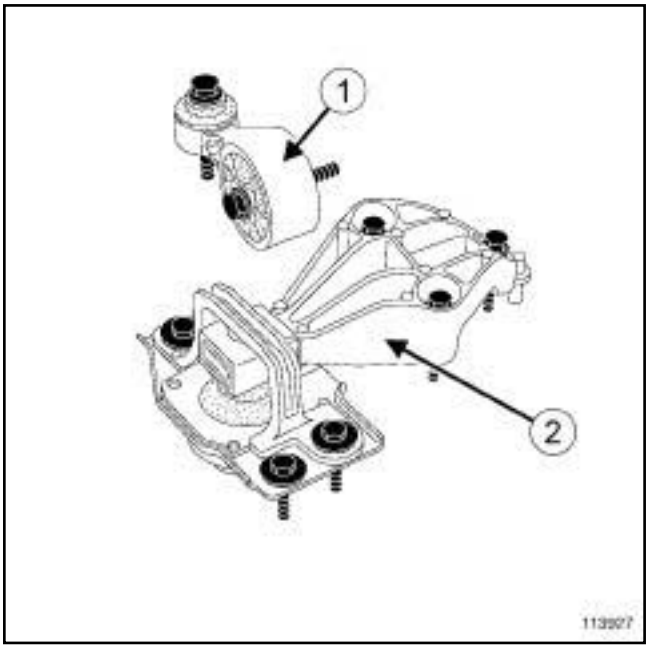

113927

❑ Remove the right-hand suspended engine mounting (**1**) and (**2**) (see **19D**, **Engine mounting**, **Right-hand suspended engine mounting: Removal - Refitting**, page **19D-20**) .

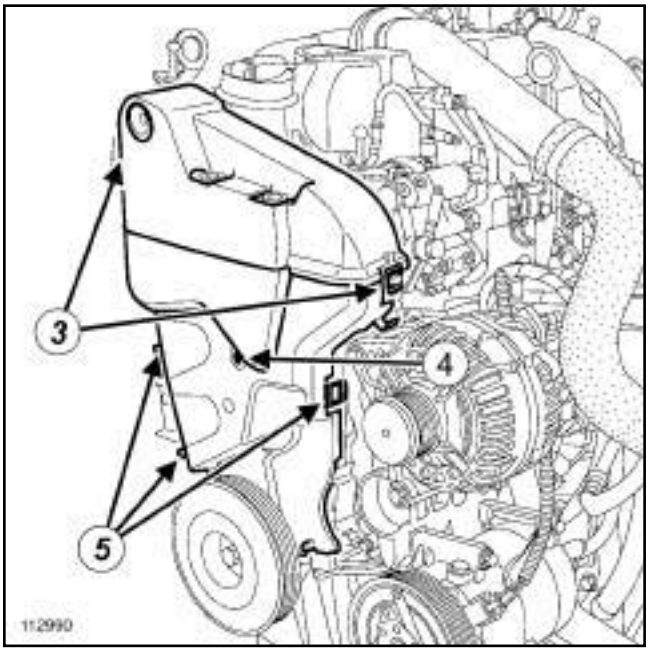

112990

❑ Unclip the tabs (**3**) .

❑ Remove:

- the upper timing cover,
- the plastic bolt (**4**) .

❑ Unclip the tabs (**5**) .

❑ Remove the lower timing cover.

B84 or C84 or G84 or S84, and K9K, and 732 or 734

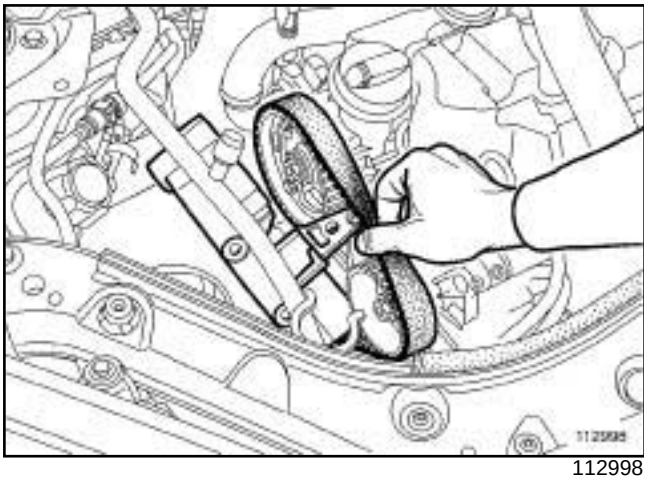

112998

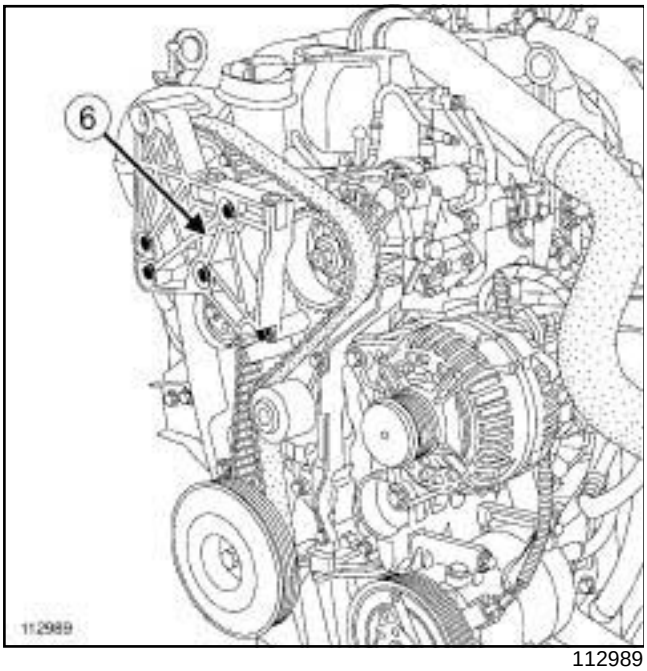

112989

- ❑ Undo the cylinder head suspended mounting bolts.
- ❑ Twist the timing belt slightly (to remove the cylinder head suspended mounting).
- ❑ Remove the cylinder head suspended mounting (**6**) .

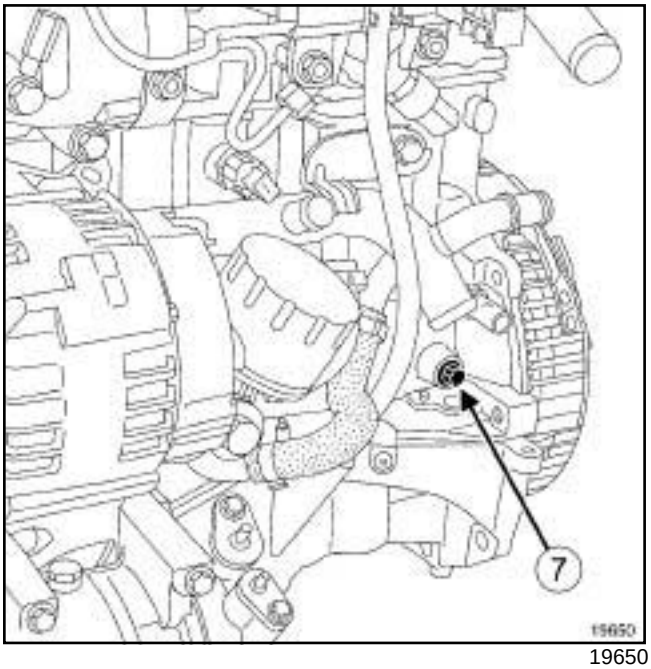

19650

- ❑ Remove the TDC pin plug (**7**) using a **14** torx socket.

2 - OPERATION FOR REMOVAL OF PART CONCERNED

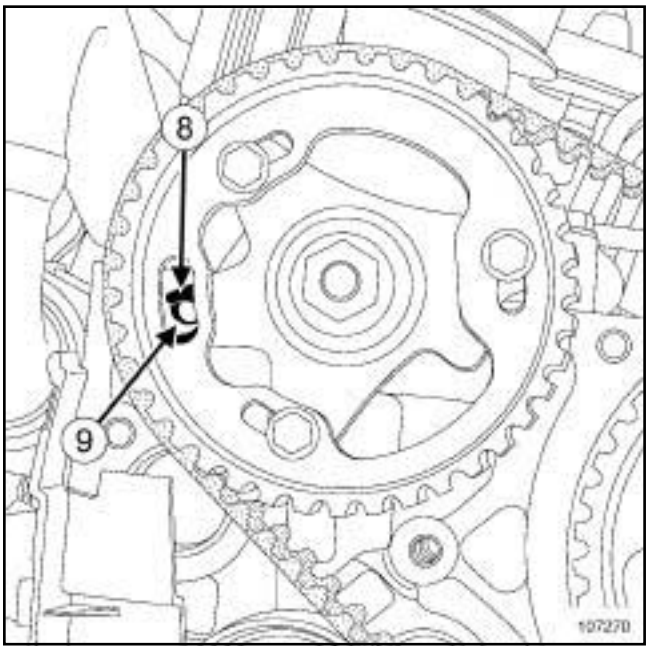

107270

- ❑ Turn the crankshaft to position the camshaft pulley hole (**8**) almost opposite the cylinder head hole (**9**) .

B84 or C84 or G84 or S84, and K9K, and 732 or 734

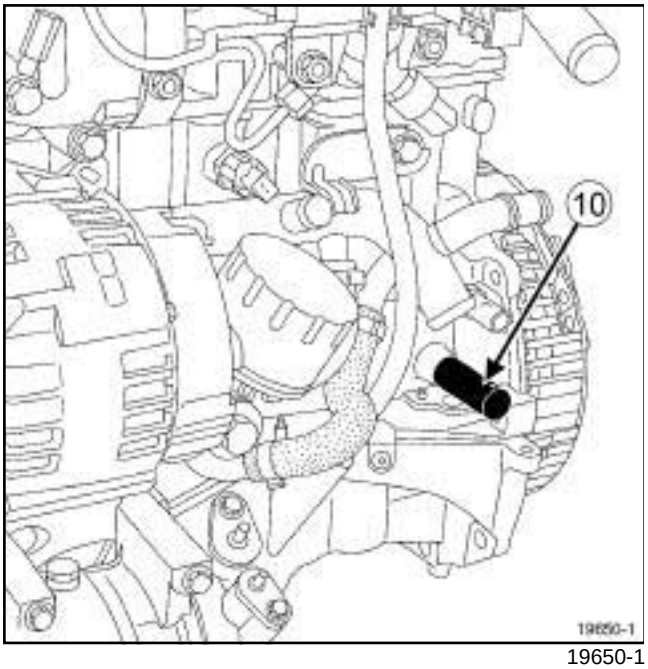

19650-1

❑ Screw in the TDC setting pin (**10**) **(Mot. 1489)**.

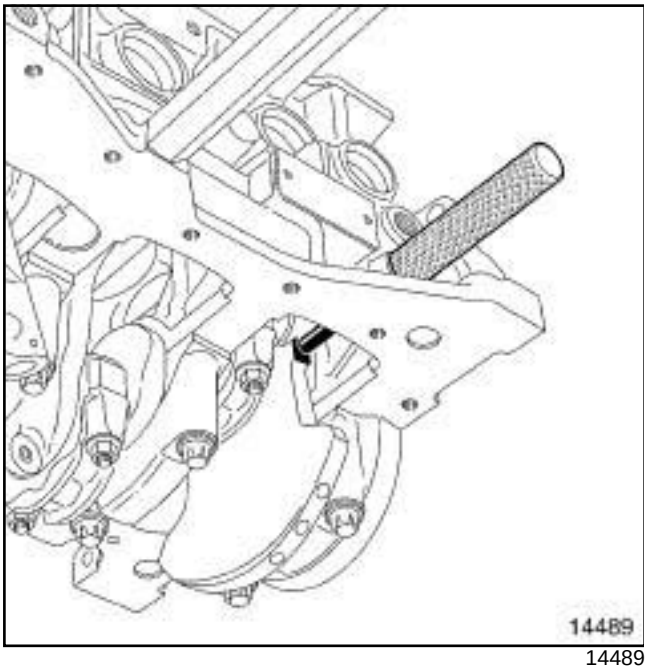

14489

❑ Turn the crankshaft clockwise (timing end) smoothly until the crankshaft is pressed against the TDC setting pin.

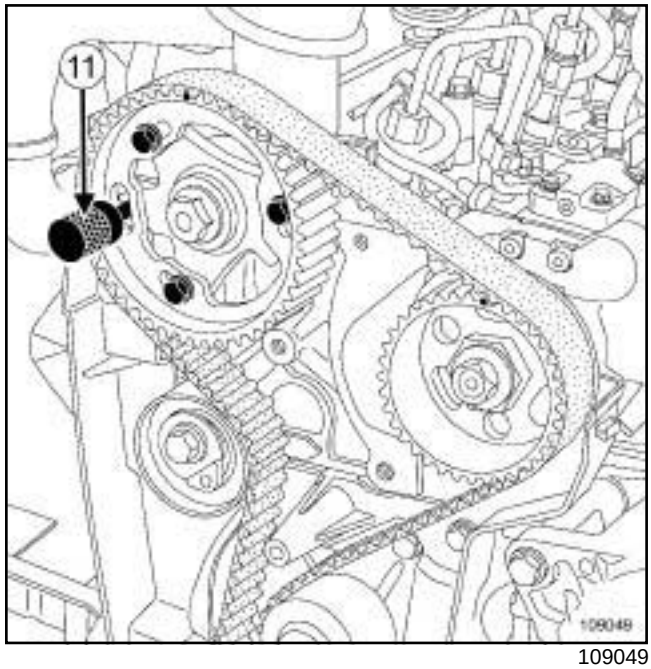

109049

❑ Insert the pin (**11**) **(Mot. 1430)** into the camshaft pulley and cylinder head hole.

❑ Remove:

- the camshaft pulley timing pin **(Mot. 1430)**,
- the TDC setting pin **(Mot. 1489)**.

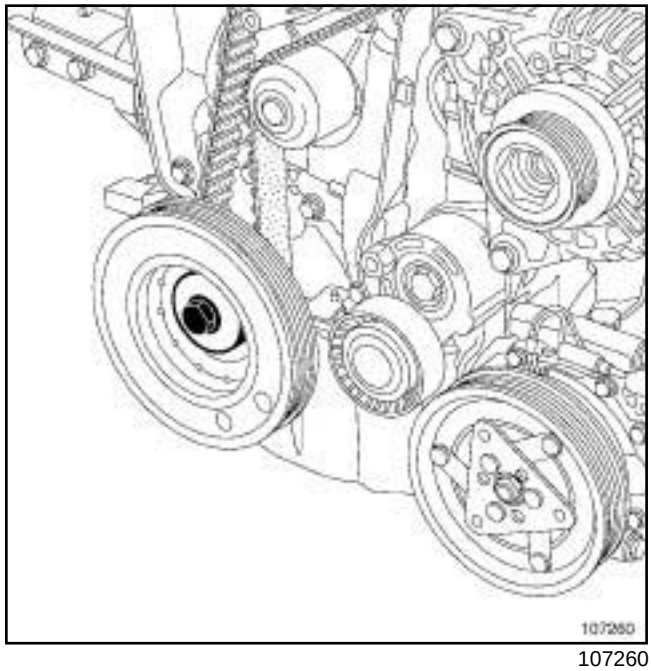

107260

❑ Remove the crankshaft accessories pulley, locking the engine flywheel using a screwdriver passing it through orifice under the starter motor.

B84 or C84 or G84 or S84, and K9K, and 732 or 734

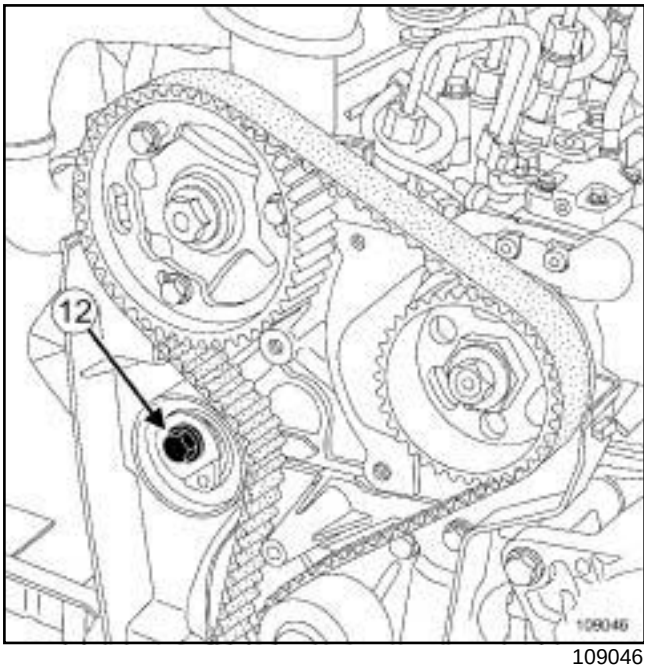

109046

- Loosen the tensioning roller bolt (**12**) to loosen the timing belt.
- Remove:
  - the timing belt,
  - the timing tensioning roller.

B84 or C84 or G84 or S84, and K9K, and 732 or 734

V - REFITTING

1 - REFITTING OPERATION FOR PART CONCERNED

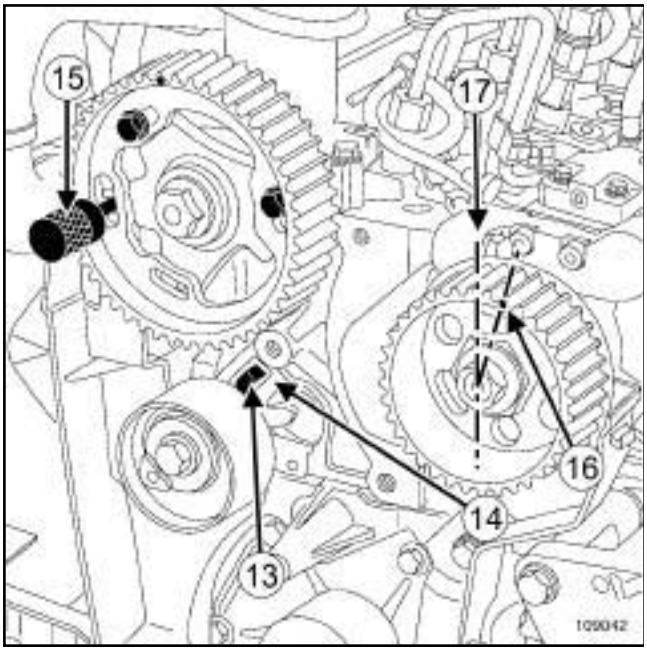

109042

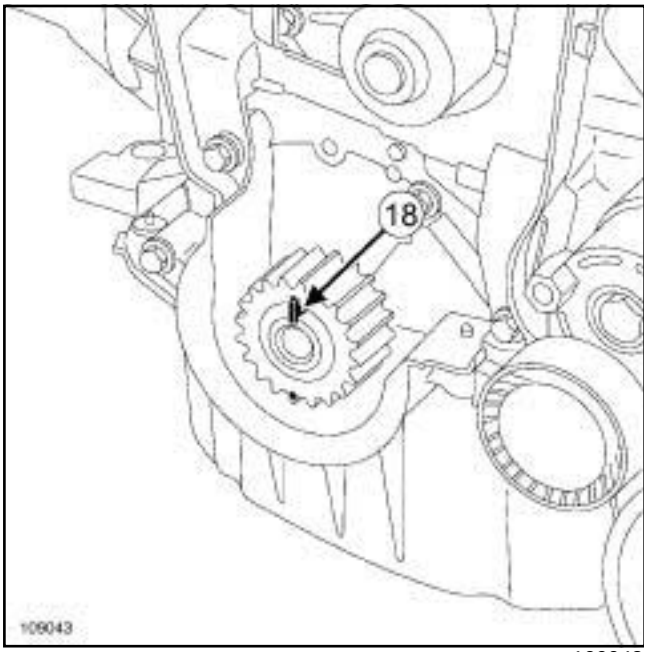

109043

❑ Refit the timing tension wheel.

❑ Put the tensioning roller lug (**13**) in the cylinder head groove (**14**) .

❑ Insert the pin (**15**) **(Mot. 1430)** into the camshaft pulley and cylinder head holes, turning the camshaft using an **18 mm** offset spanner if necessary.

❑ Check that:

- the high pressure pump mark (**16**) is one tooth to the right from the vertical axis (**17**) ,
- the crankshaft is properly resting against the TDC setting pin **(Mot. 1489)** (with the crankshaft timing sprocket collet (**18**) at the top).

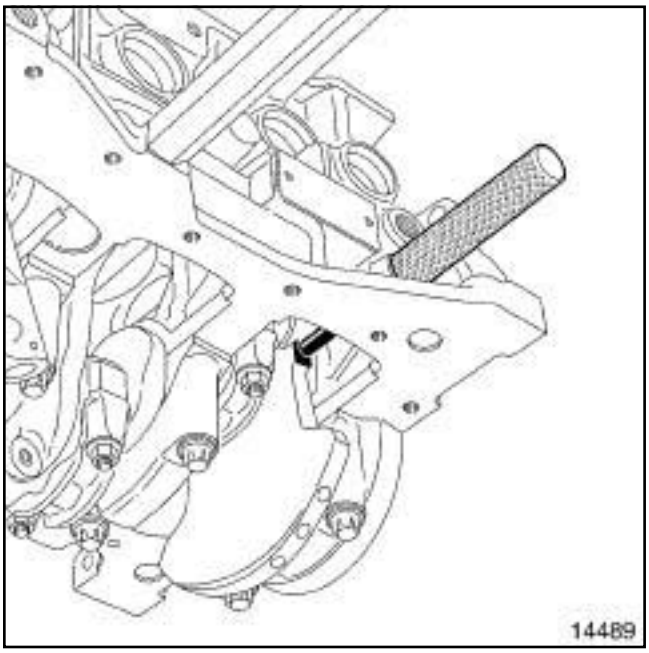

14489

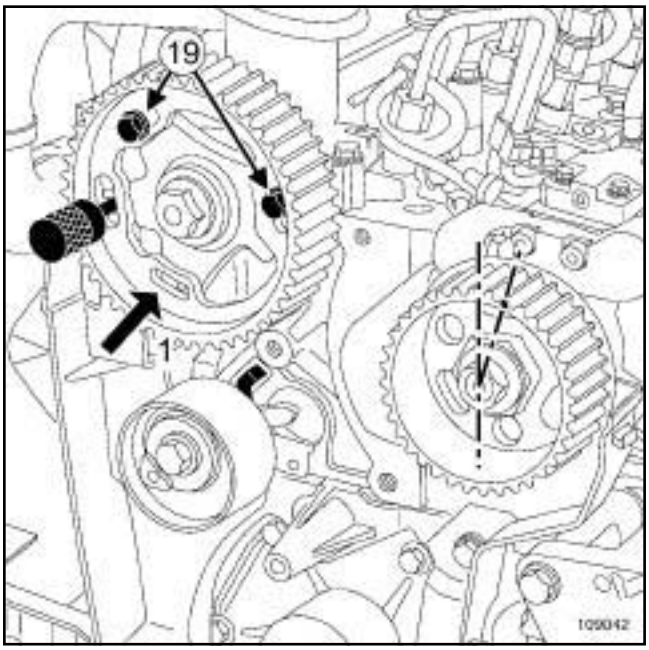

109042

❑ Remove one bolt from the camshaft pulley wheel.

❑ Loosen the two other camshaft pulley wheel bolts (**19**) by one turn.

B84 or C84 or G84 or S84, and K9K, and 732 or 734

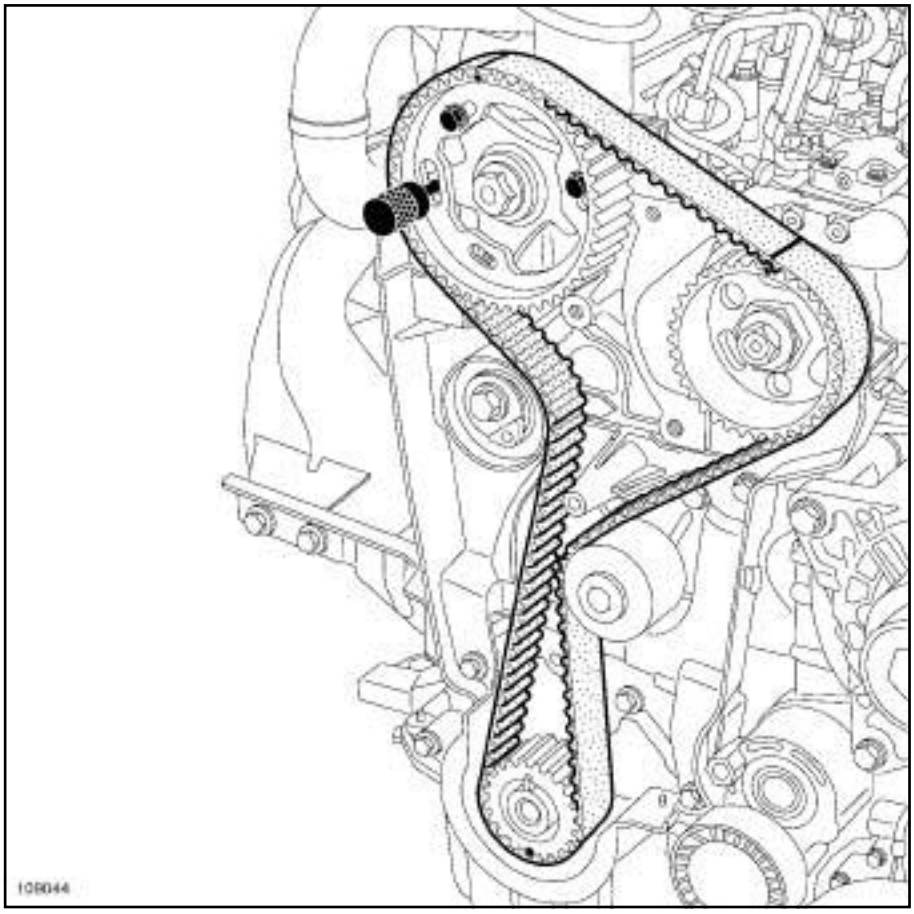

109044

- Fit the timing belt, starting with the crankshaft sprocket, aligning the marks on the belt with those on the crankshaft sprockets, the camshaft and the high pressure pump. There should be 19 tooth spaces between the sprocket marks and 51 tooth spaces between the crankshaft sprockets and the high pressure pump.

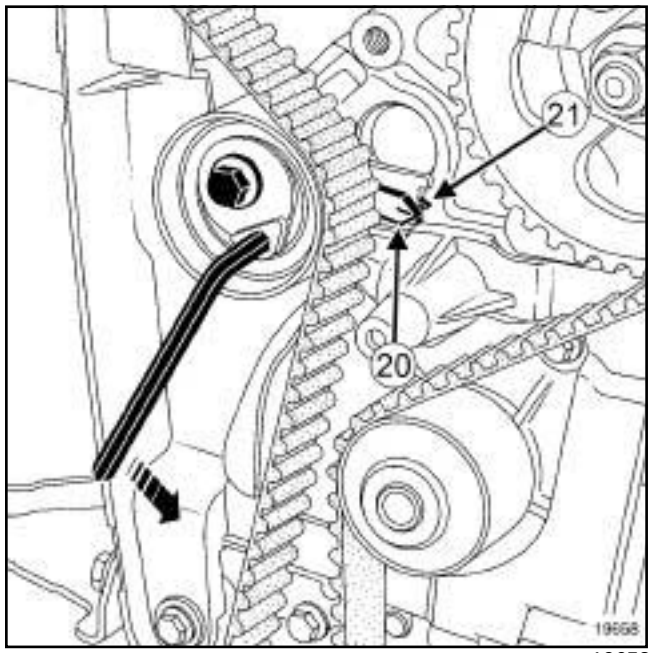

19658

- Bring the tensioning roller adjustable index (**20**) opposite the lug (**21**) using a **6 mm** Allen key, turning anti-clockwise.
- Torque tighten **the tensioning roller bolt (27 Nm)**.

B84 or C84 or G84 or S84, and K9K, and 732 or 734

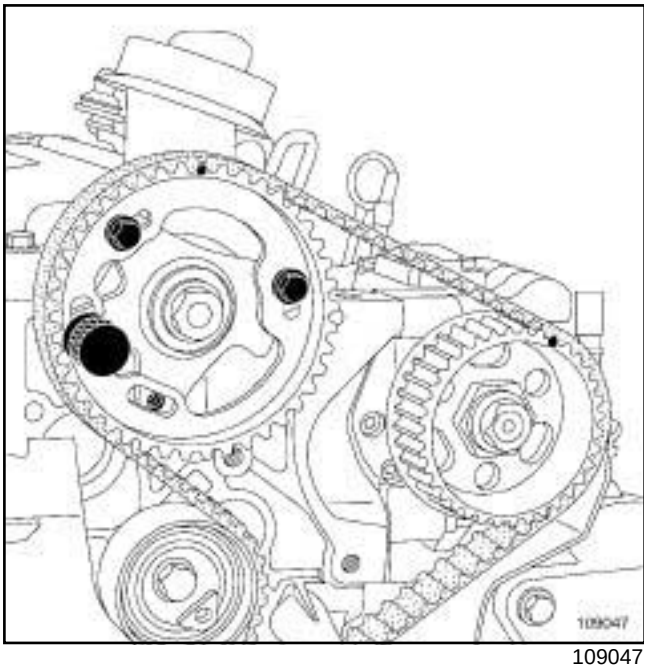

109047

❑ Check that the camshaft pulley hub bolts are not fully up against the camshaft pulley wheel.

B84 or C84 or G84 or S84, and K9K, and 732 or 734

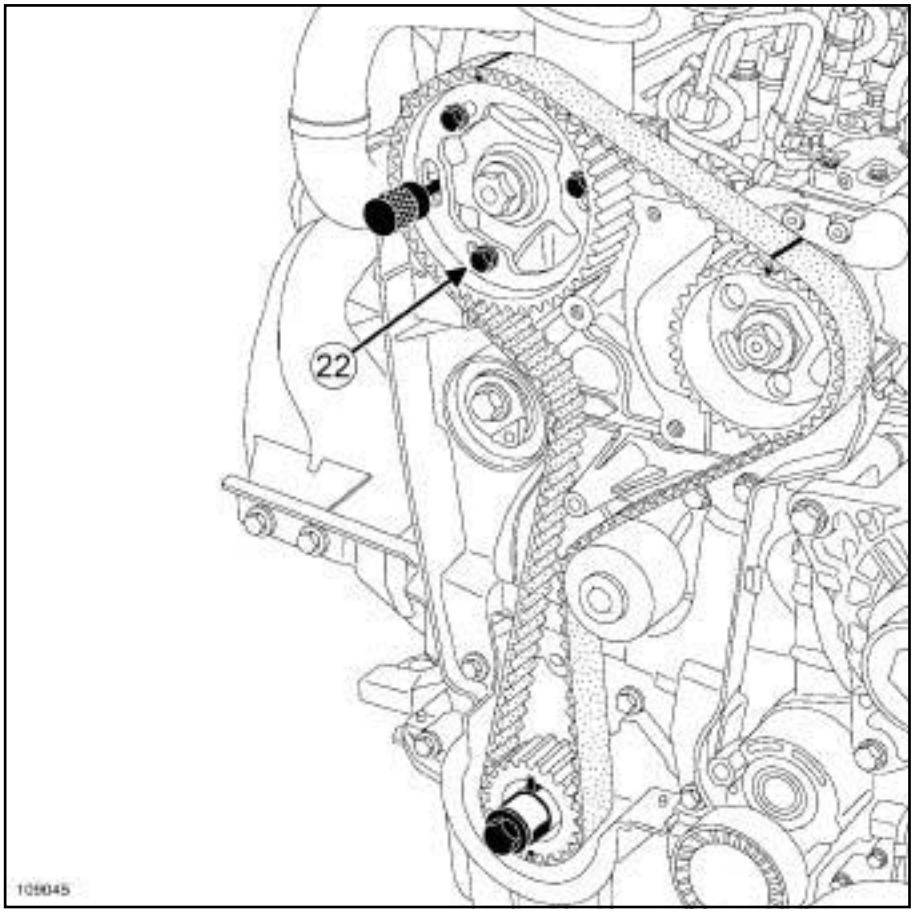

109045

- ❑ Refit the camshaft pulley wheel bolt (**22**) .
- ❑ Torque tighten the **camshaft pulley wheel bolts (14 Nm)**.
- ❑ Remove:
  - the TDC setting pin **(Mot. 1489)**,
  - the set of 5 timing pins for the camshaft and crankshaft pulleys **(Mot. 1430)**.

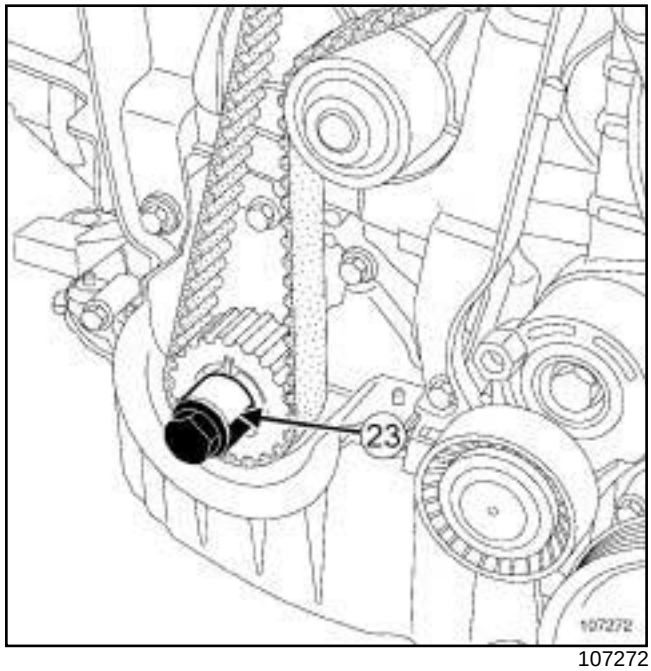

107272

- ❑ Tighten the old crankshaft accessories pulley bolt fitted with a spacer (**23**) (which does not cover the timing sprocket mark) onto the crankshaft.

B84 or C84 or G84 or S84, and K9K, and 732 or 734

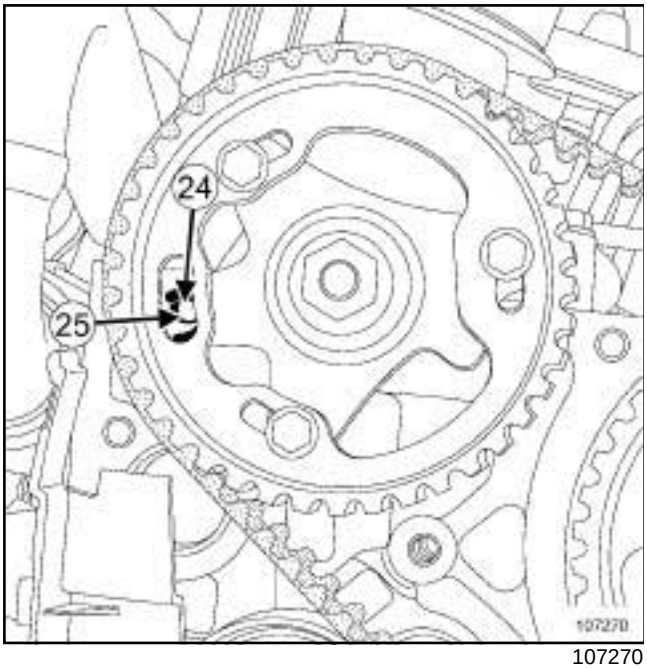

107270

- ❑ Rotate the crankshaft twice clockwise (timing end) before the camshaft pulley hole (**24**) is opposite the cylinder head hole (**25**) .
- ❑ Screw the TDC setting pin **(Mot. 1489)** into the cylinder block.
- ❑ Bring the crankshaft slowly and smoothly against the TDC setting pin.

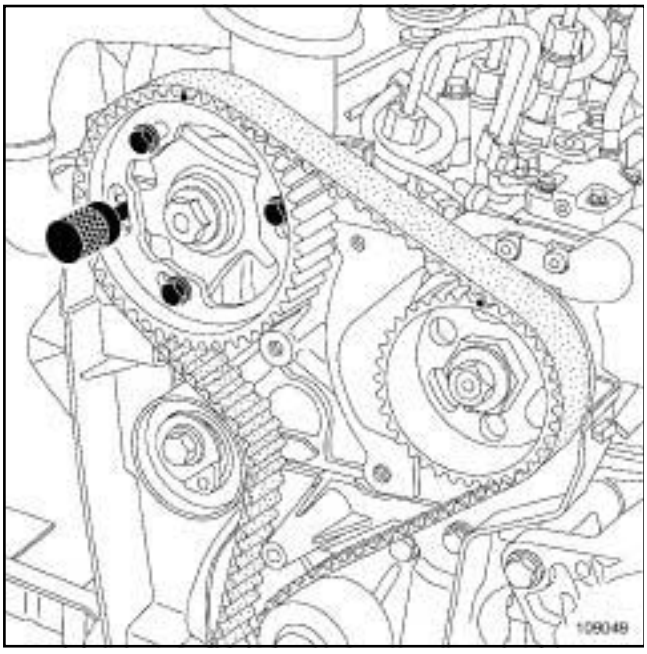

109049

- ❑ Set the camshaft pulley using the **(Mot. 1430)**.

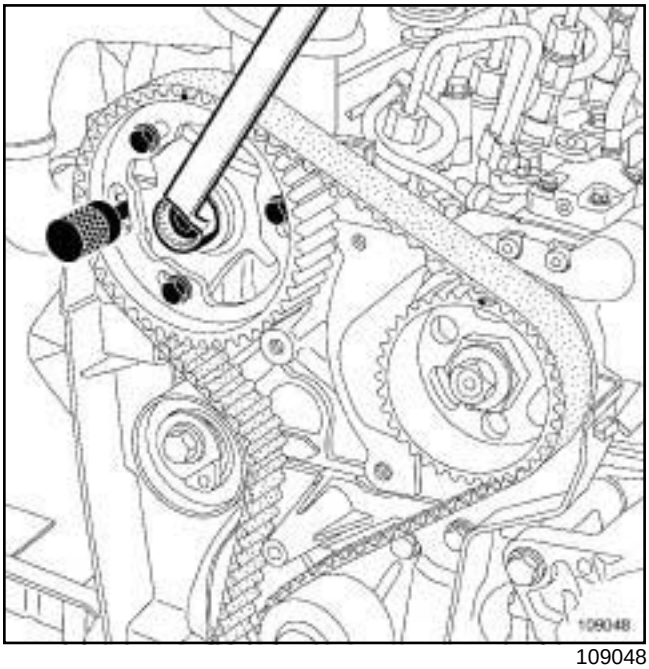

109048

- ❑ If the **(Mot. 1430)** does not engage:
- ❑ Loosen the camshaft pulley wheel bolts by one turn at most.
- ❑ Turn the camshaft pulley hub using an offset spanner to set the camshaft pulley hub,
- ❑ Do not retighten the camshaft pulley wheel bolts.

B84 or C84 or G84 or S84, and K9K, and 732 or 734

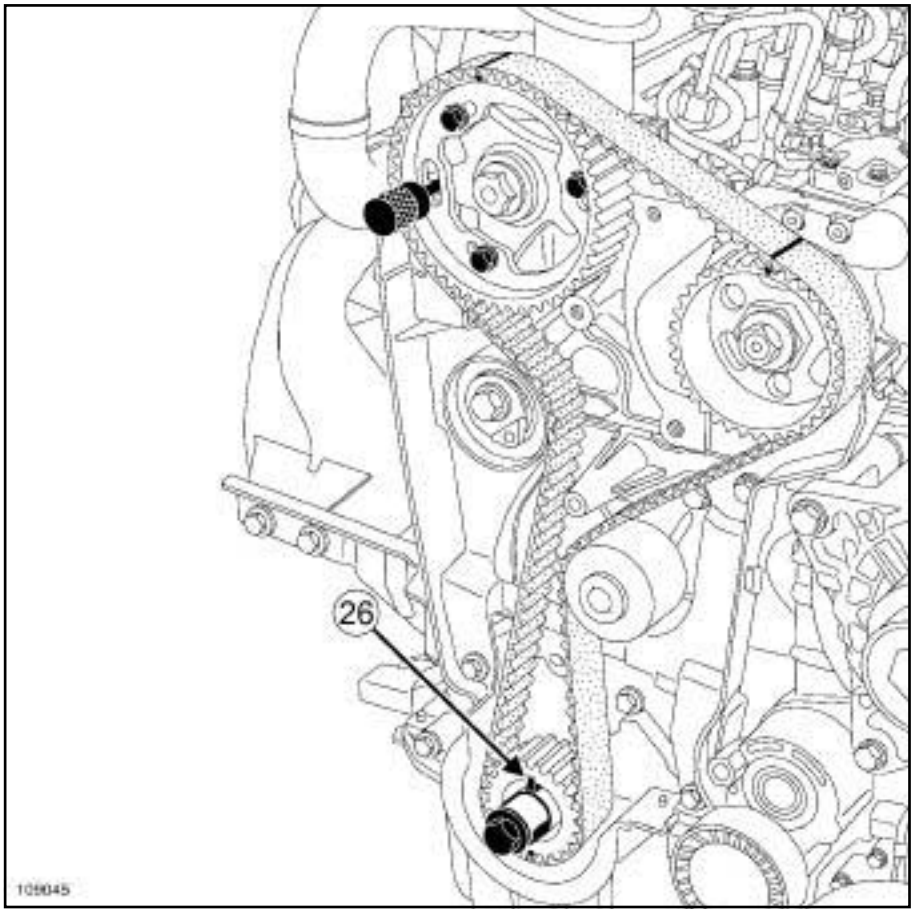

109045

❑ Check that the crankshaft timing sprocket collet (**26**) is positioned vertically at the top.

> Note:
>
> After two turns, the tensioning roller index markers may be in two different positions.
>
> The rotation of the tensioning roller eccentric depends on the position.

B84 or C84 or G84 or S84, and K9K, and 732 or 734

a - First position

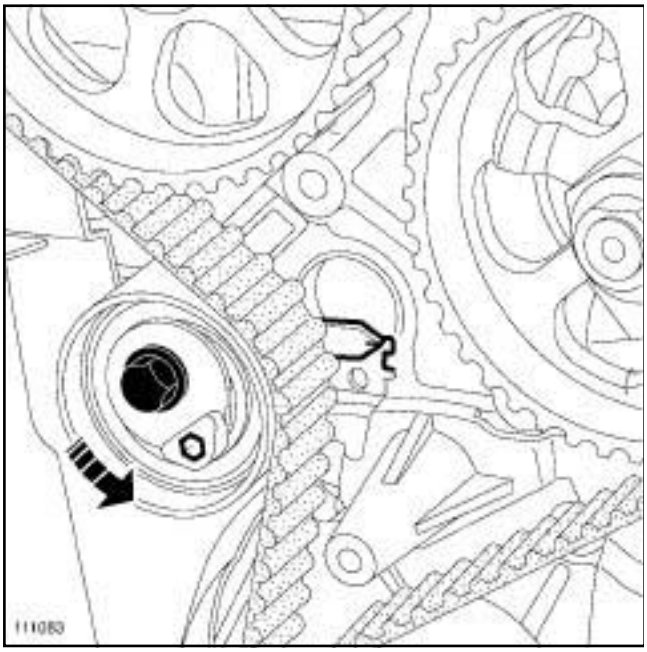

111083

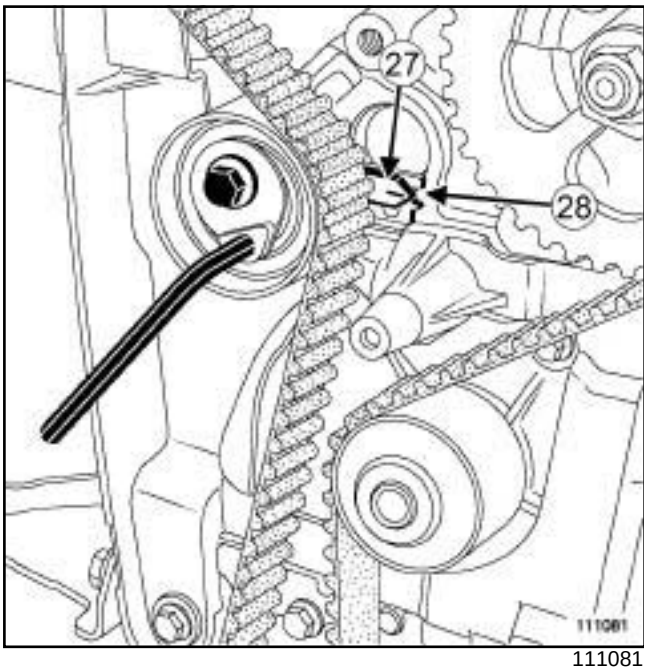

111081

- ❑ Loosen the tensioning roller bolt by up to one turn, holding it with a **6 MM** Allen key.
- ❑ Gradually align the adjustable index (**27**) in the middle of the timing window (**28**) , turning the key anticlockwise.

b - Second position

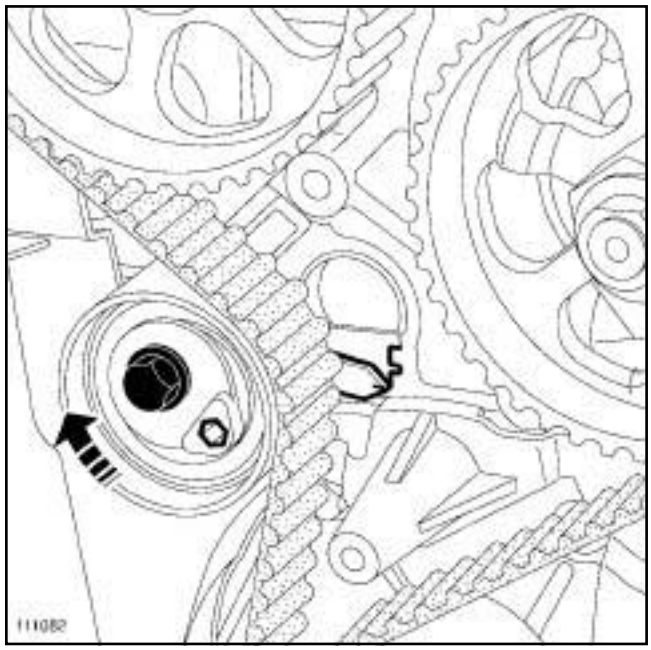

111082

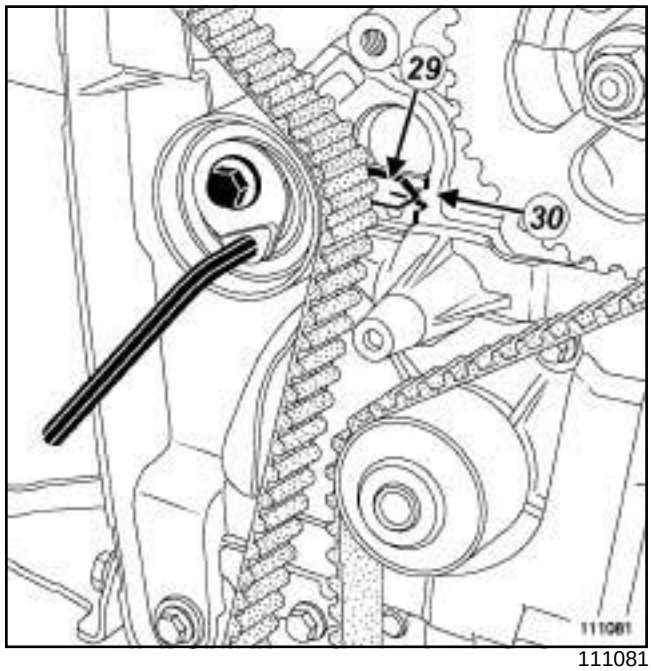

111081

- ❑ Loosen the tensioning roller bolt by up to one turn, holding it with a **6 MM** Allen key.
- ❑ Gradually align the adjustable index (**29**) in the middle of the timing window (**30**) , turning the key clockwise.
- ❑ Torque tighten:
  - the **tensioning roller bolt (27 Nm)**,
  - the **camshaft pulley wheel bolts (14 Nm)**.
- ❑ Remove:
  - the TDC setting pin **(Mot. 1489)**,

B84 or C84 or G84 or S84, and K9K, and 732 or 734

- the set of 5 timing pins for the camshaft and crankshaft pulleys **(Mot. 1430)**.

❑ Rotate the crankshaft twice in a clockwise direction (timing end) before the camshaft pulley hole is opposite the cylinder head hole.

❑ Screw the TDC setting pin **(Mot. 1489)** into the cylinder block.

❑ Bring the crankshaft slowly and smoothly against the TDC setting pin.

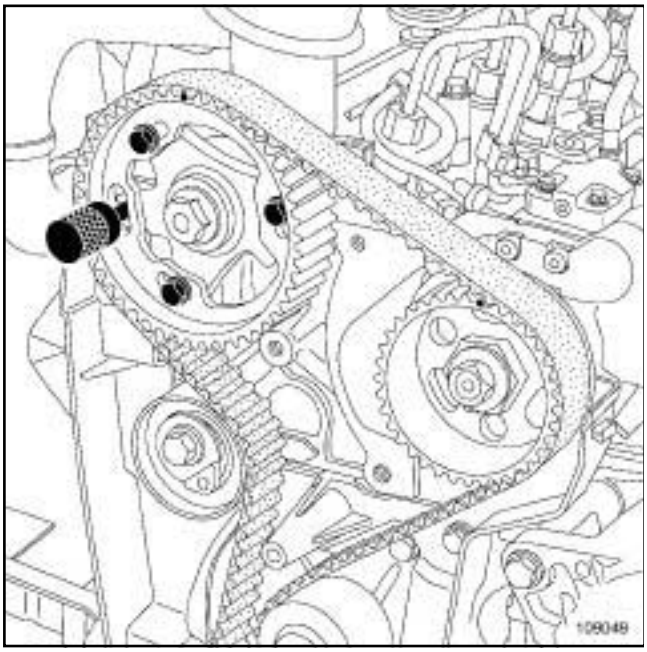

109049

❑ Set the camshaft pulley using the **(Mot. 1430)**.

❑ If this is not possible, repeat the operation for refitting the timing belt.

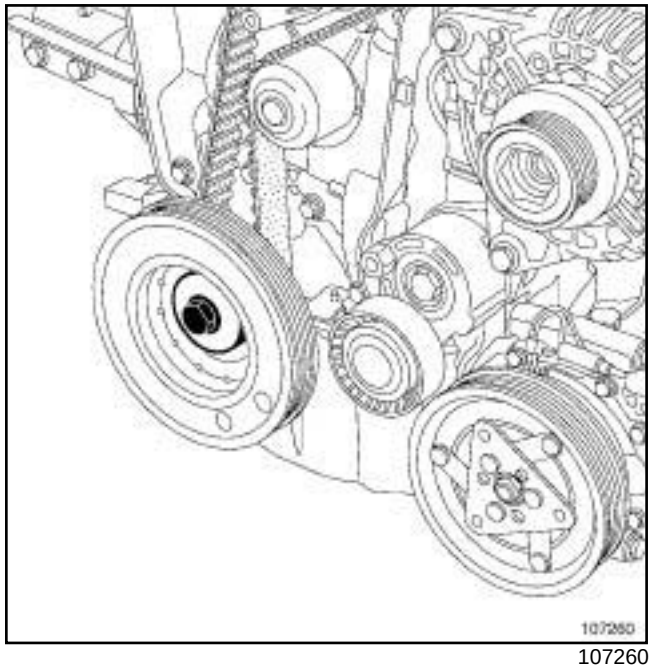

107260

❑ Refit the accessories crankshaft pulley with a new bolt.

❑ Torque and angle tighten (with the crankshaft resting against the TDC setting pin) the **crankshaft pulley M14 bolt (120 Nm + 95° ± 15°)**

❑ Remove the following tools:

- the TDC setting pin **(Mot. 1489)**,
- the set of 5 timing pins for the camshaft and crankshaft pulleys **(Mot. 1430)**.

2 - FINAL operation

❑ Refit the TDC pin plug, coating the thread hole with silicone adhesive sealant (see **Vehicle: Parts and ingredients for the repairwork**) (MR 364, 04B, Products and Consumables).

❑ Torque tighten the **TDC pin plug (20 Nm)**.

B84 or C84 or G84 or S84, and K9K, and 732 or 734

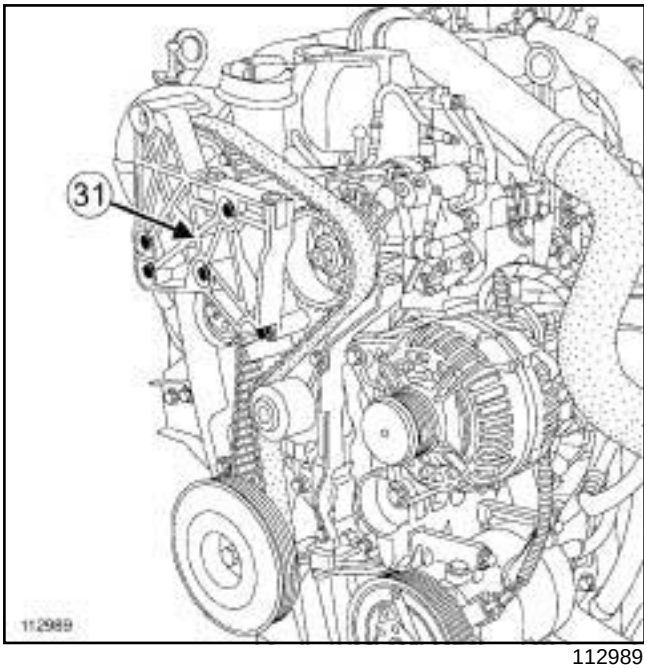

112989

- ❑ Refit the cylinder head suspended mounting (**31**) .
- ❑ Torque tighten the **cylinder head suspended mounting bolts (21 Nm)**

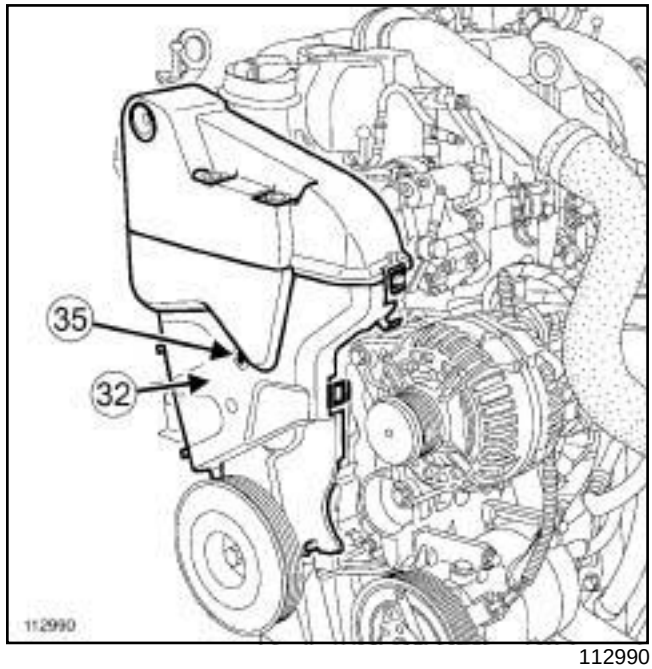

112990

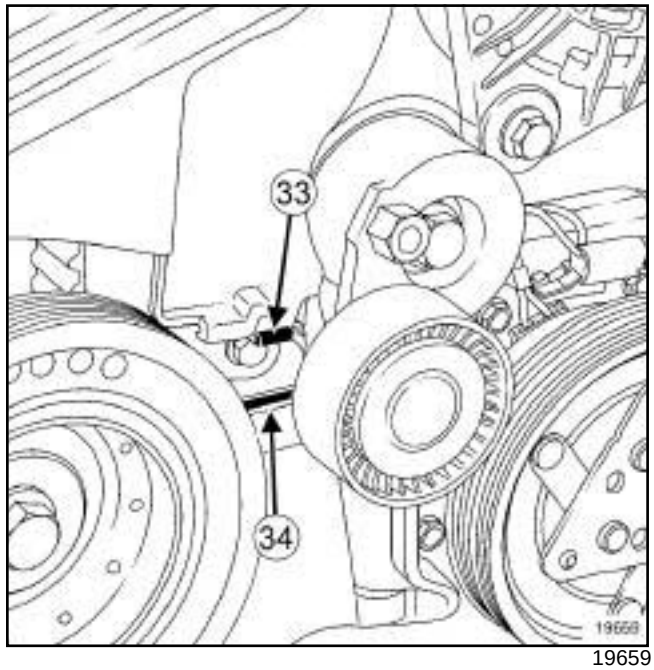

19659

- ❑ Refit:
  - the lower timing cover (**32**) , positioning the tab (**33**) in the inner timing cover hole (**34**) ,
  - the timing cover plastic bolt (**35**) .

B84 or C84 or G84 or S84, and K9K, and 732 or 734

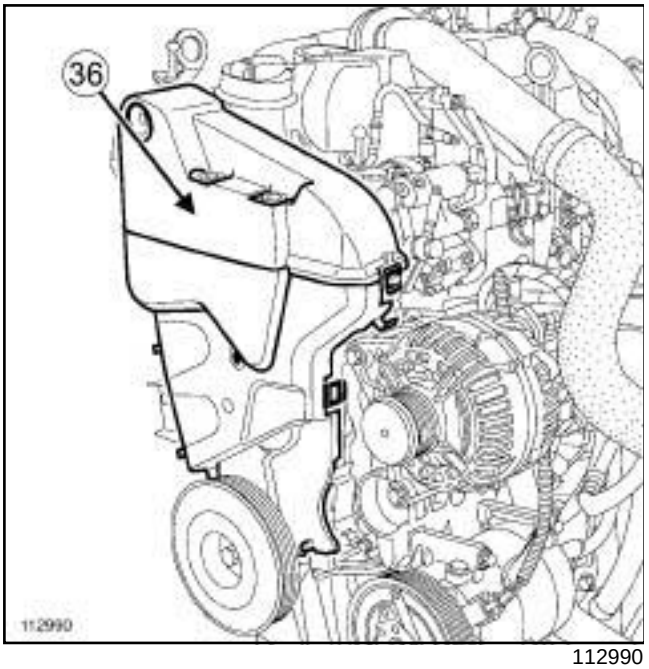

112990

❑ Refit the upper timing cover (**36**)

B84 or C84 or G84 or S84, and K9K, and 732 or 734

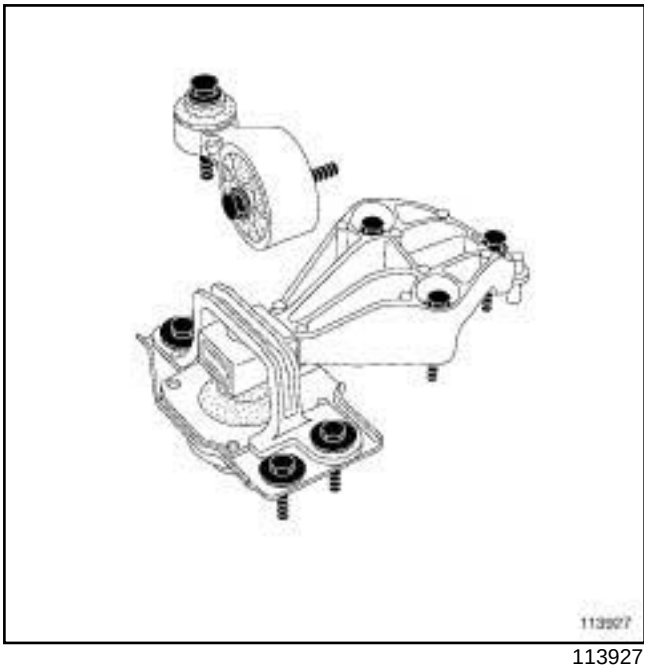

113927

- ❑ Refit the right-hand suspended engine mounting (see **19D**, **Engine mounting**, **Right-hand suspended engine mounting: Removal - Refitting**, page **19D-20**) .
- ❑ Remove the **(Mot. 1453)** then the.
- ❑ Clip on the manual priming pump.
- ❑ Refit:
  - the rear suspended engine mounting (see **19D**, **Engine mounting**, **Lower engine tie-bar: Removal - Refitting**, page **19D-36**) ,
  - the exhaust ball joint bracket mounting bolts
- ❑ Torque tighten the **ball joint bracket mounting bolts fitted with their springs (21 Nm)**
- ❑ Refit:
  - the accessories belt (see **11A**, **Top and front of engine**, **Accessories belt: Removal - Refitting**, page **11A-4**) ,
  - the front section of the front right-hand wheel arch liner (see **Front wheel arch liner: Removal - Refitting**) (MR 365, 55A, Exterior protection),
  - the front right-hand wheel (see **Wheel: Removal - Refitting**) (MR 364, 35A, Wheels and tyres),
  - the engine undertray,
  - the scuttle panel grille (see **Scuttle panel grille: Removal - Refitting**) (MR 365, 56A, Exterior equipment),
  - the engine covers.
- ❑ Connect the battery (see **Battery : Removal - Refitting**) (MR 364, 80A, Battery).

B84 or C84, and F4R, and 774

Essential special tooling	
Mot. 1672	Lower engine support.
Mot. 1487	Tool for removing the camshaft covers (57 mm diameter).
Mot. 1488	Tool for removing the camshaft covers (43 mm diameter).
Mot. 1054	TDC setting pin.
Mot. 1509	Camshaft sprocket locking tool.
Mot. 799-01	Timing gear wheel immobiliser.
Mot. 1496	Tool for setting camshaft.

Tightening torques ▽	
toothed sprocket nuts	**80 Nm**
camshaft pulley nuts	**15 Nm**
fixed roller bolts	**50 Nm**
old inlet camshaft pulley nut	**30 Nm**
old exhaust camshaft pulley nut	**30 Nm**
tensioning roller nut	**28 Nm**
toothed sprocket nuts of the tool (Mot. 1509)	**80 Nm**
inlet camshaft pulley nut	**86° ± 6**
exhaust camshaft pulley nut	**86° ± 6°**
crankshaft accessories pulley bolt	**40 Nm + 110° ± 10°**
suspended mounting linkage mounting bolts	**105 Nm**
bolts securing the suspended engine mounting cover on the engine	**62 Nm**
wheel bolts	**110 Nm**
battery cover bolts	**4 Nm**

WARNING
Never turn the engine in the opposite direction to its normal operating direction.

WARNING

Replace the following parts when they are removed:

- the belt (timing and accessories),
- the camshaft pulley nuts,
- the crankshaft accessories pulley bolt.

WARNING
When replacing the timing belt, the tensioning roller, the fixed roller and the crankshaft accessories pulley bolts must be replaced.

REMOVAL

❑ Position the vehicle on a two-post lift (see **Vehicle: Towing and lifting**) (MR 364, 02A, Lifting equipment).

❑ Disconnect the battery (see **Battery: Removal - Refitting**) (MR 364, 80A, Battery).

❑ Remove:

- the battery,
- the battery tray,
- the engine covers,
- the front right-hand wheel,
- the front right-hand wheel arch,

B84 or C84, and F4R, and 774

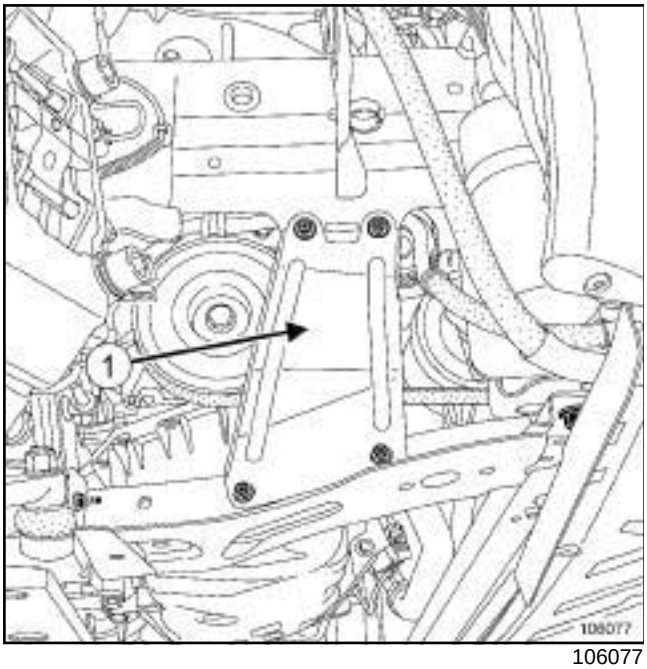

106077

❑ Remove:

- the radiator cross member right-hand side reinforcement (**1**) ,
- the bumper mountings,
- the bumper.

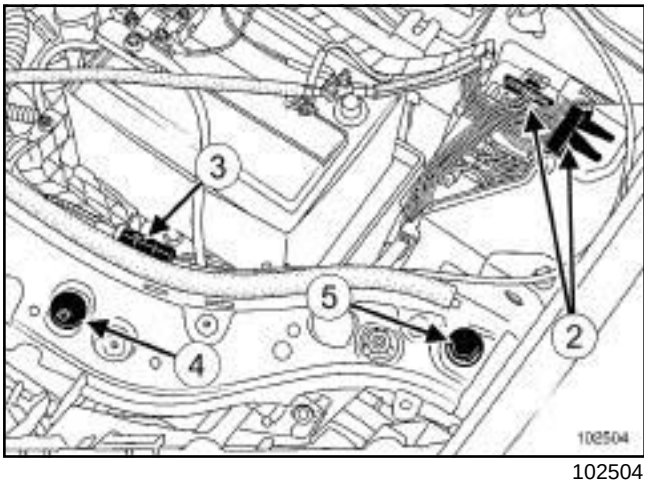

102504

❑ Disconnect the two connectors (**2**) .

❑ Unclip the bonnet opening cable (**3**) .

❑ Remove:

- the clip (**4**) ,
- the mounting (**5**) .

❑ Disconnect the screen washer pipes.

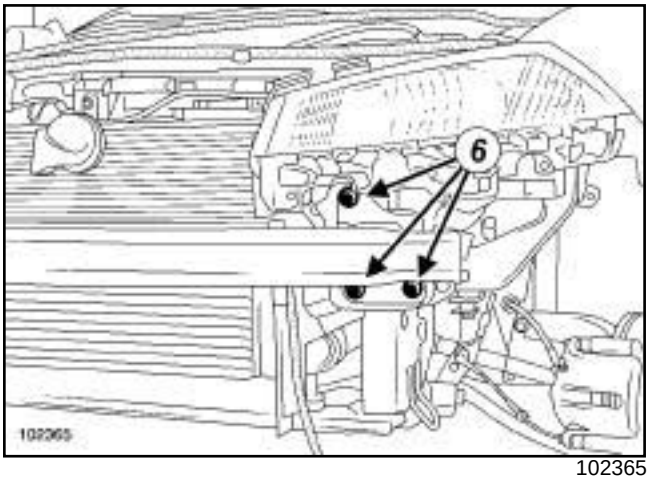

102365

❑ Remove:

- the front end panel mountings (**6**) ,
- the front end panel,
- the front right-hand wheel driveshaft (see **Front right-hand wheel driveshaft: Removal - Refitting**) (MR 364, 29A, Driveshafts).

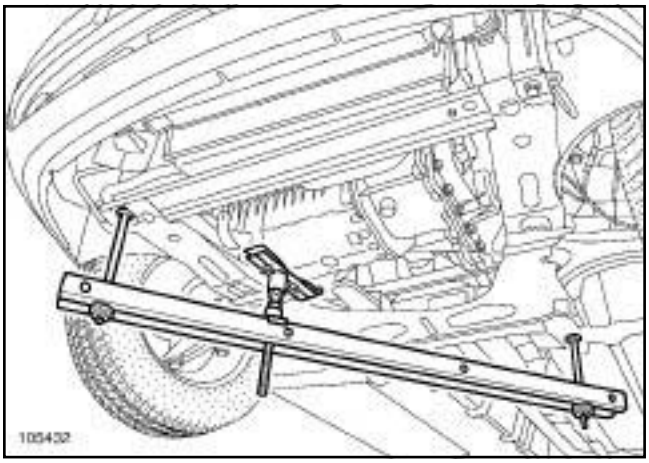

105432

❑ Position the **(Mot. 1672)**.

B84 or C84, and F4R, and 774

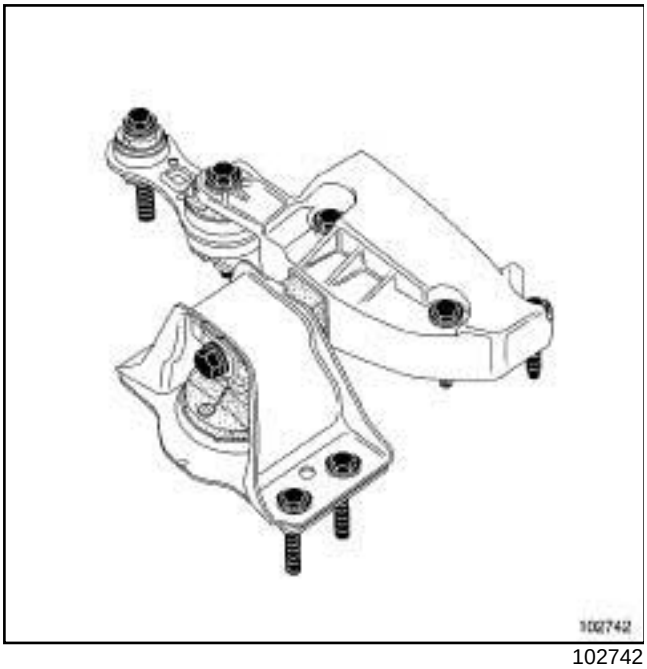

102742

- ❑ Remove the lower engine tie-bar.
- ❑ Mark the engine support mounting bolts.
- ❑ Make a mark on the suspended engine mounting in relation to the body.
- ❑ Remove the « suspended mounting - engine » assembly.

> Note:
>
> Be careful not to bend the air conditioning pipe.

- ❑ Remove the accessories belt (see **11A**, **Top and front of engine**, **Accessories belt: Removal - Refitting**, page **11A-4**) .

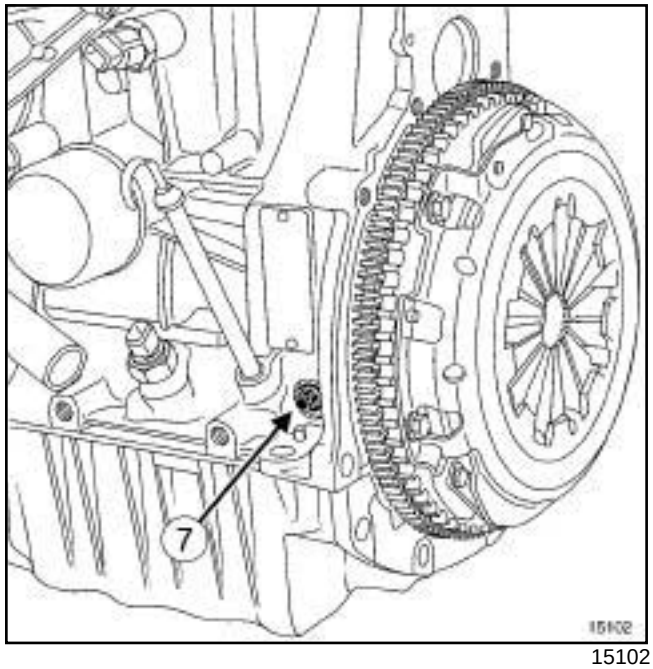

15102

- ❑ Remove the TDC pin plug (**7**) .

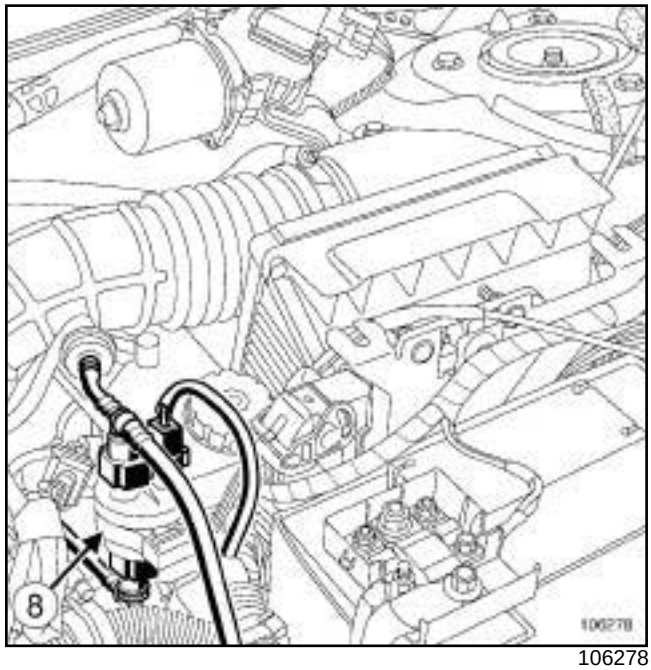

106278

- ❑ Remove fuel vapour recirculation solenoid valve (**8**) .

B84 or C84, and F4R, and 774

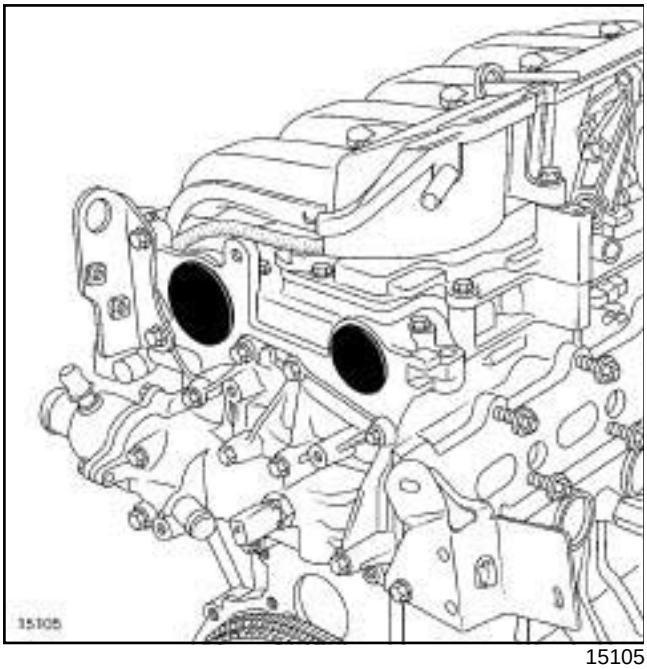

15105

❑ Remove the camshaft sealing plugs using the **(Mot. 1487)** and **(Mot. 1488)**.

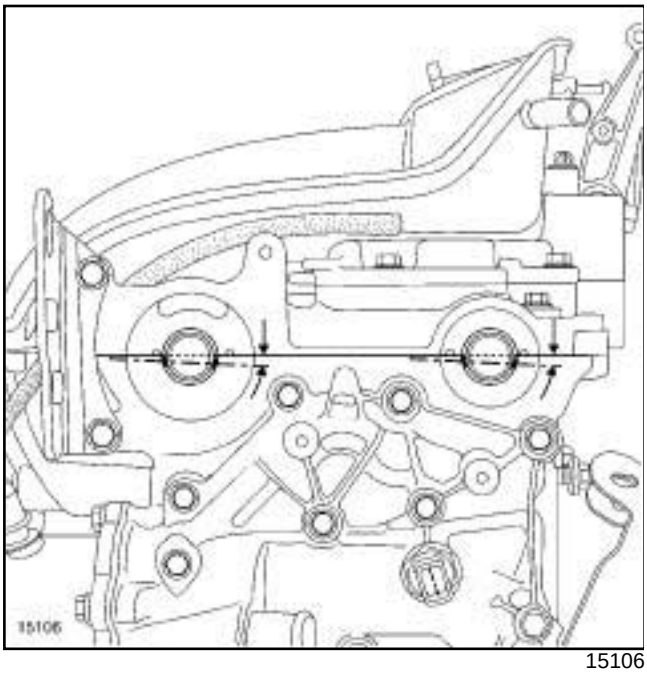

15106

❑ Rotate the engine clockwise (timing end) so that the camshaft grooves are offset below the centre line and almost horizontal.

❑ Insert the TDC setting pin **(Mot. 1054)** so that it is between the balancing hole and the crankshaft setting groove.

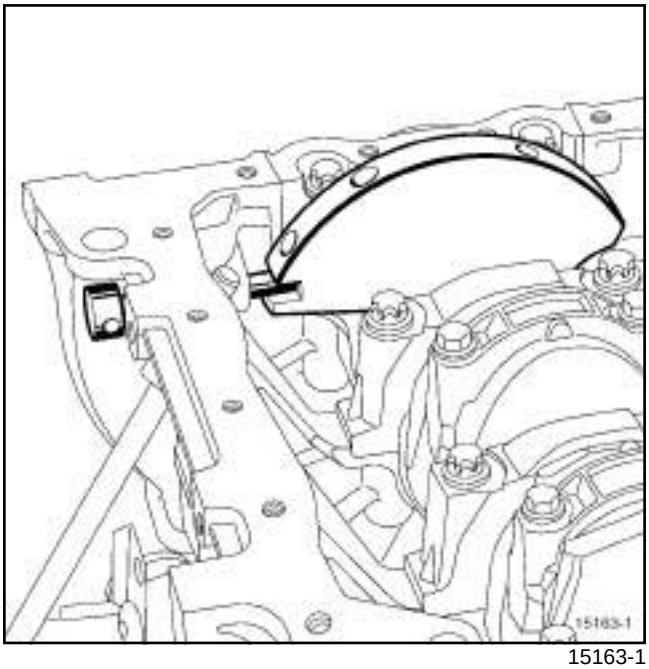

15163-1

❑ Gently turn the engine in the same direction, inserting the TDC setting pin **(Mot. 1054)** as far as the setting point.

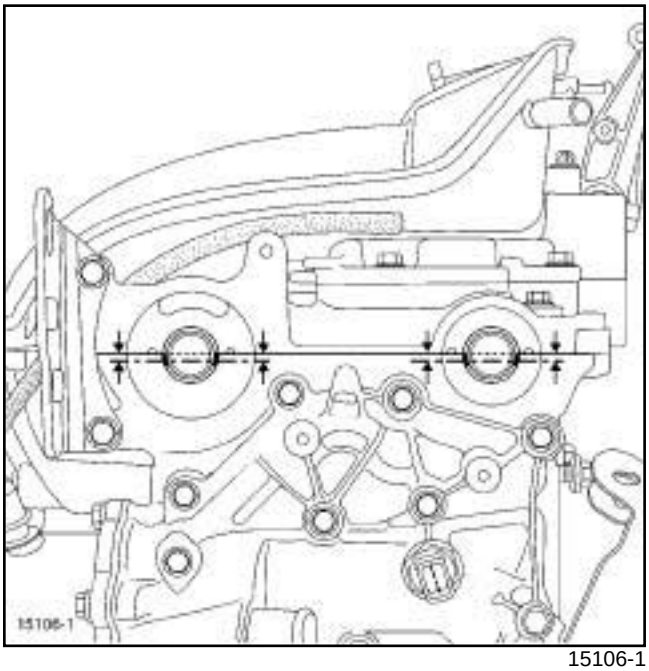

15106-1

❑ At the setting point the camshaft grooves must be horizontal and offset below the centre line.

B84 or C84, and F4R, and 774

Correct position

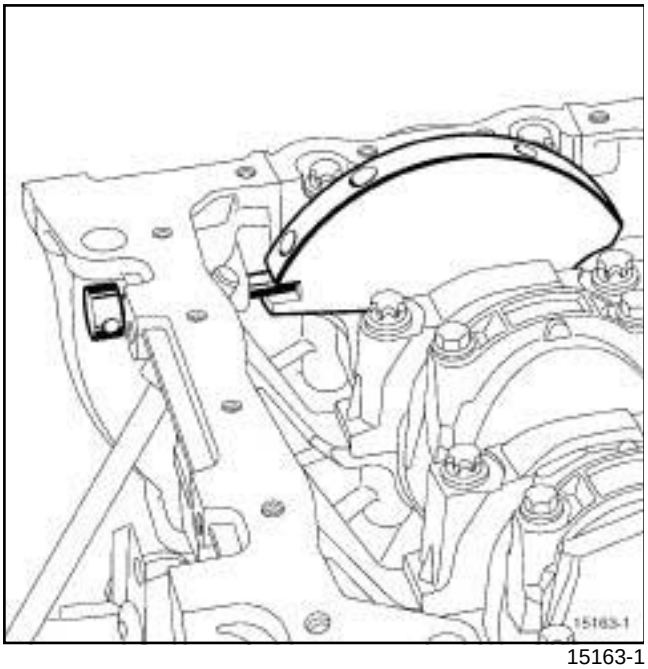

15163-1

Incorrect position

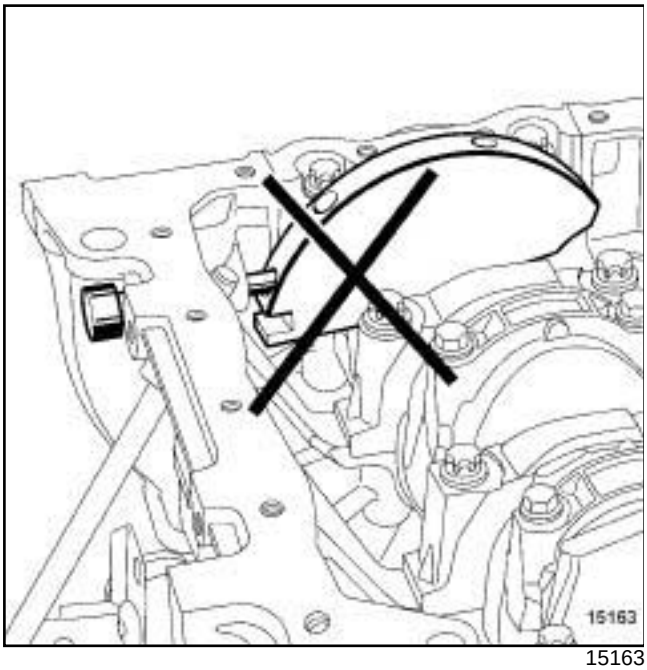

15163

❑ The pin is in the balancing hole.

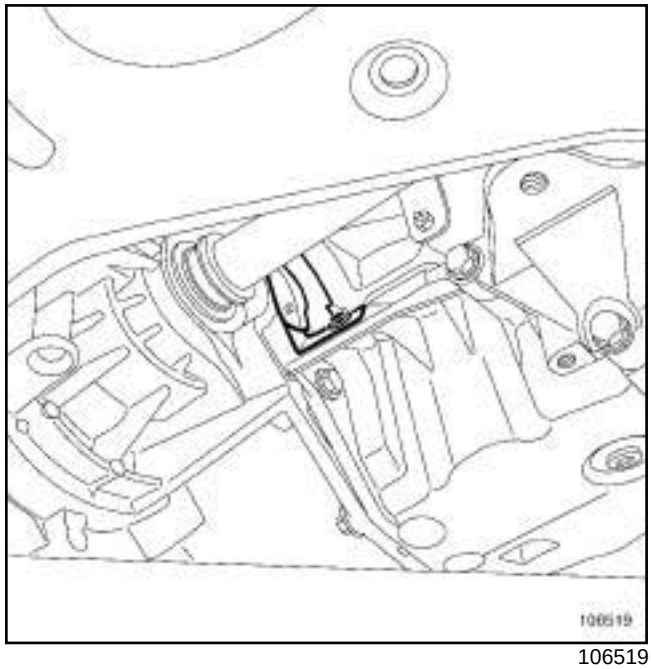

106519

❑ Remove:

- the flywheel protector,
- the crankshaft pulley, locking the flywheel with a screwdriver.

B84 or C84, and F4R, and 774

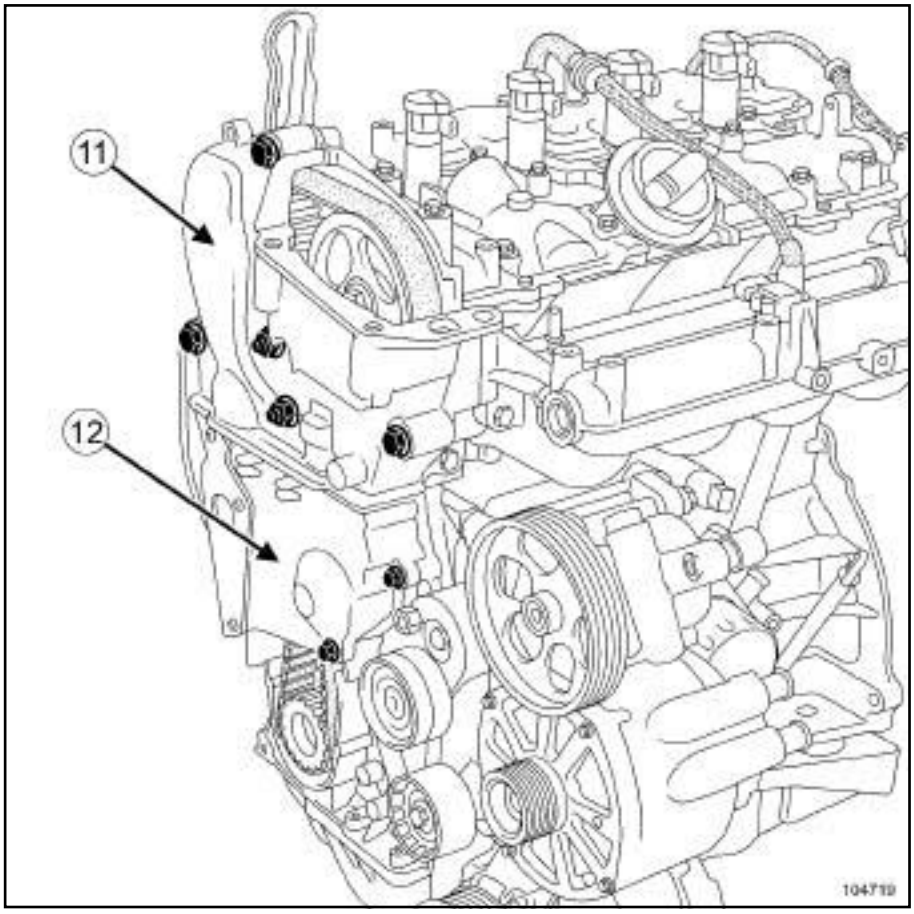

104719

❑ Remove:

- the upper timing cover (**11**) ,
- the timing intermediate housing (**12**) ,
- the lower timing cover.

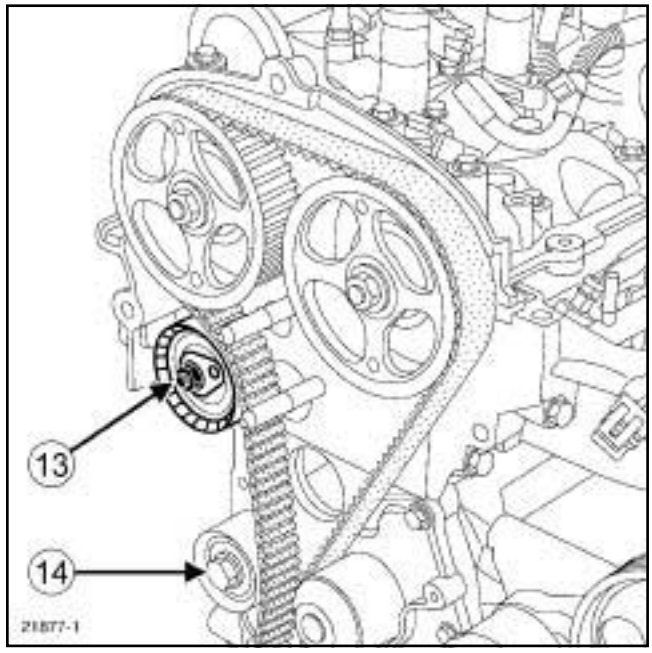

21877-1

❑ Slacken the timing belt by undoing the tensioning roller nut (**13**) .

❑ Remove:

- the tensioning roller,

B84 or C84, and F4R, and 774

- the fixed roller (**14**) ,
- the timing belt,
- the crankshaft timing sprocket.

REFITTING

❑

WARNING
Never turn the engine in the opposite direction to its normal operating direction.

WARNING
It is compulsory to remove the old camshaft pulley nuts to give the belt the correct tension.

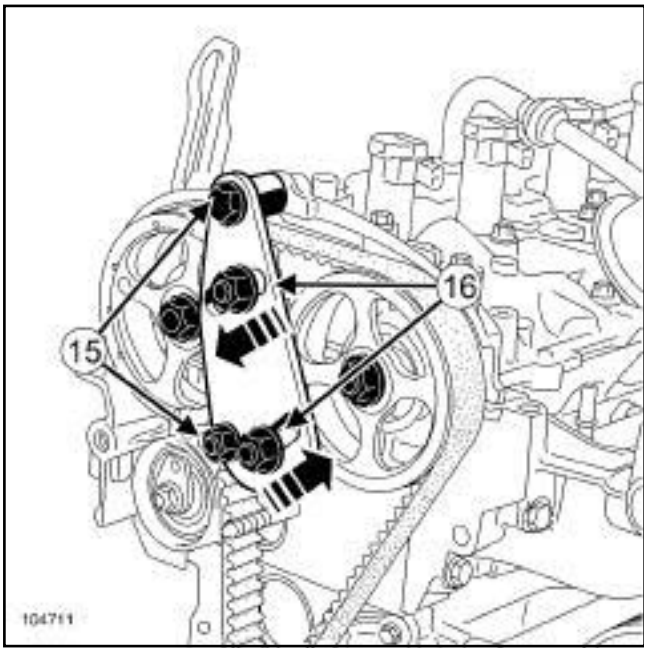

104711

❑ Fit the **(Mot. 1509)**.

❑ Tighten the bolt and the collar nut (**15**) .

❑ Offer up the sprocket nuts against the camshaft pulleys.

❑ Torque tighten the **toothed sprocket nuts (80 Nm)** at (**16**) .

❑ Remove:

- the camshaft pulley nuts,
- the camshaft pulleys.

❑ Refit the degreased camshaft pulleys with their old nuts.

❑ Torque tighten the **camshaft pulley nuts (15 Nm)** using the **(Mot. 799-01)**.

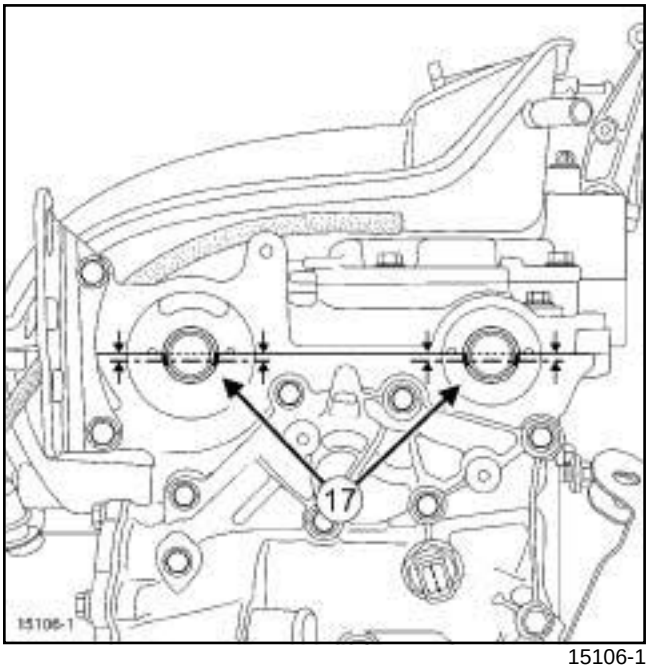

15106-1

❑ Position the offset grooves (**17**) horizontally below the centre line as shown by rotating the camshafts using the **(Mot. 799-01)**.

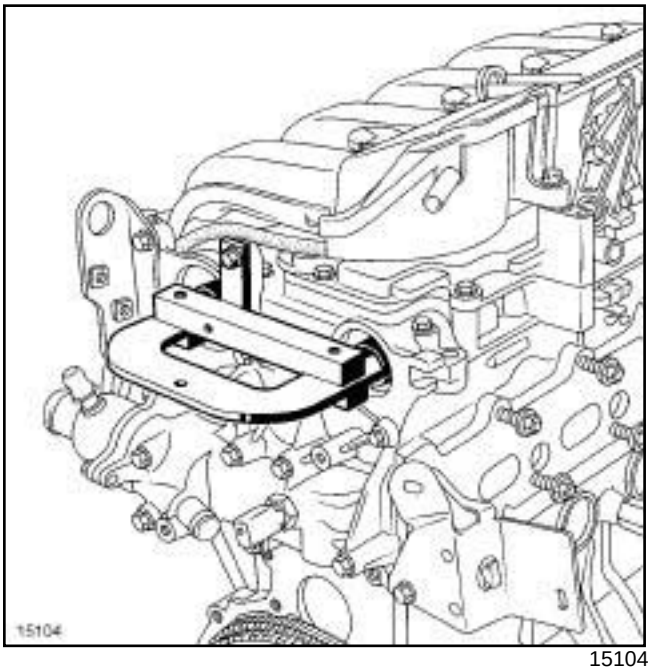

15104

❑ Fit the **(Mot. 1496)** on the ends of the camshafts.

❑ Loosen the camshaft pulley nuts.

B84 or C84, and F4R, and 774

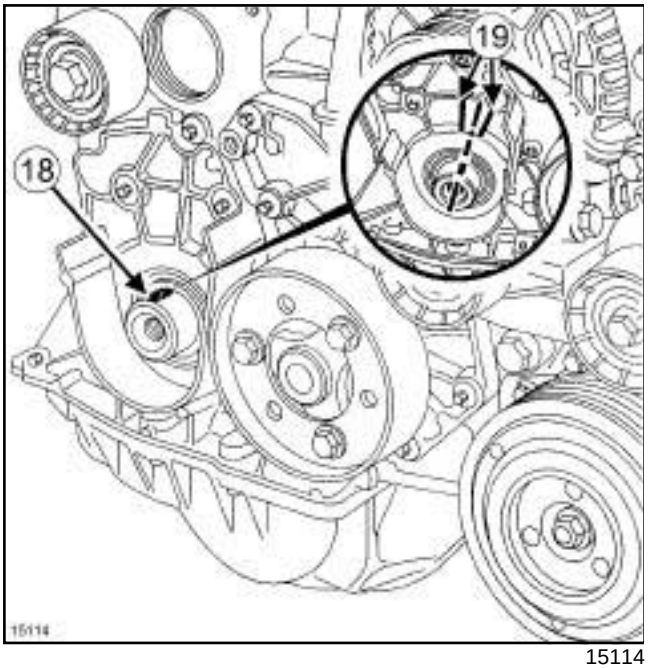

15114

Correct position

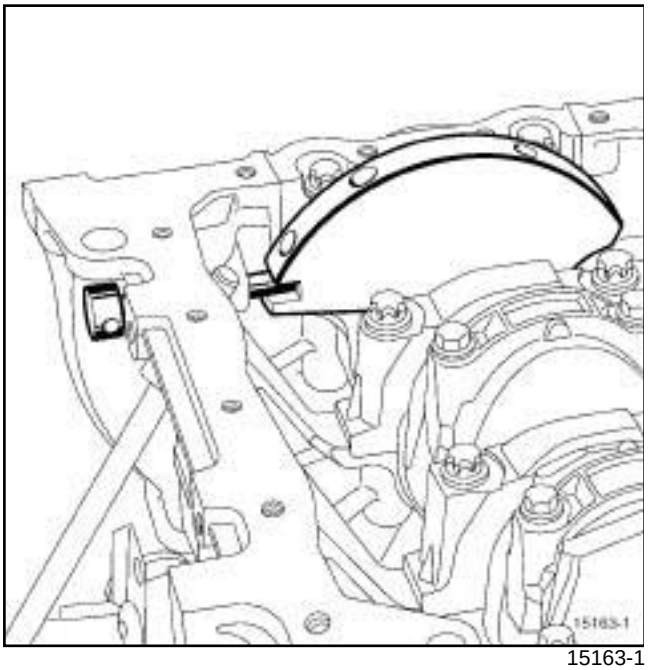

15163-1

❑ Check that the crankshaft is timed properly.

> **WARNING**
> The crankshaft groove (**18**) must be between the two ribs (**19**) .

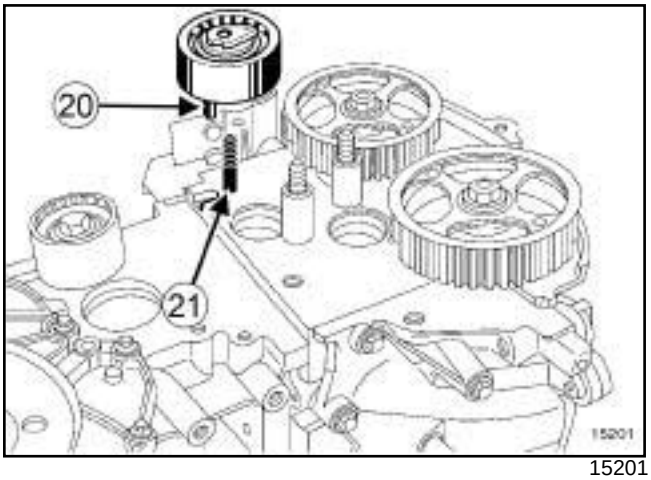

15201

❑ Refit:

- a new tensioning roller, positioning the tensioning roller lug (**20**) correctly in the groove (**21**) ,
- a crankshaft sprocket with integrated key.

B84 or C84, and F4R, and 774

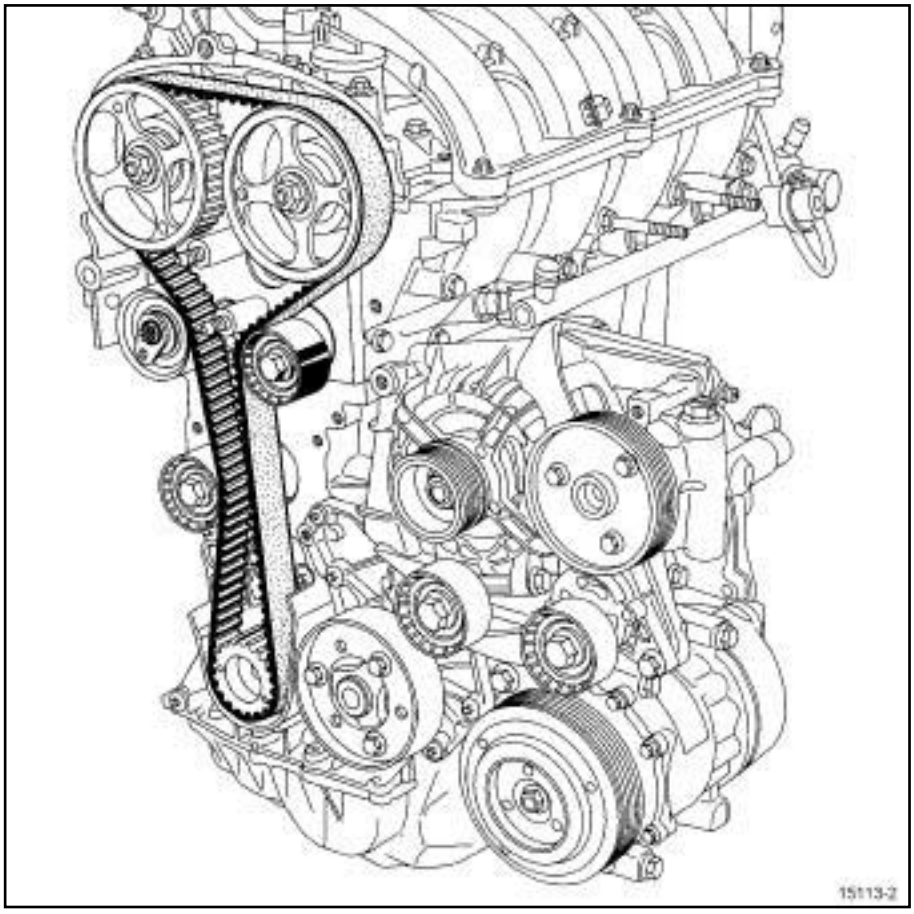

15113-2

- ❑ Refit:
  - the new belt,
  - the new fixed roller.
- ❑ Torque tighten the **fixed roller bolts (50 Nm)**.

B84 or C84, and F4R, and 774

I - BELT TENSION

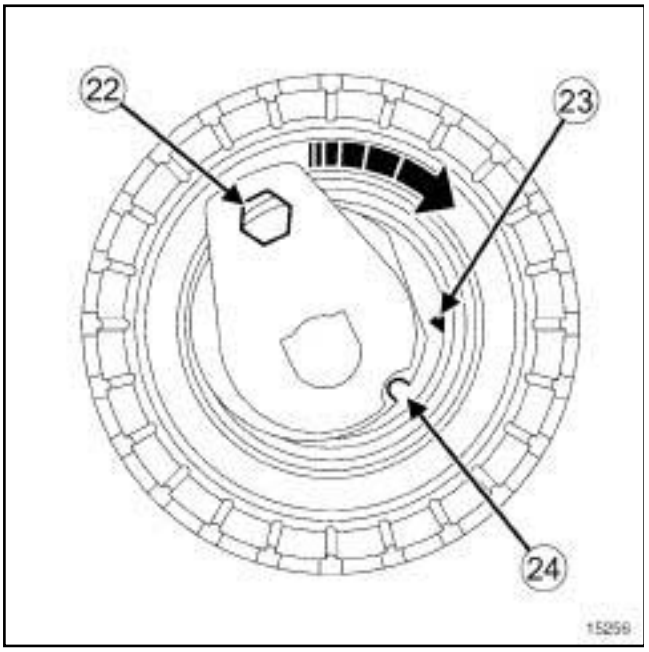

15256

❑

WARNING
Do not rotate the tensioning roller anti-clockwise.

❑ Align the marks (**24**) and (**23**) of the tensioning roller using a **6 mm** Allen key at (**22**) .

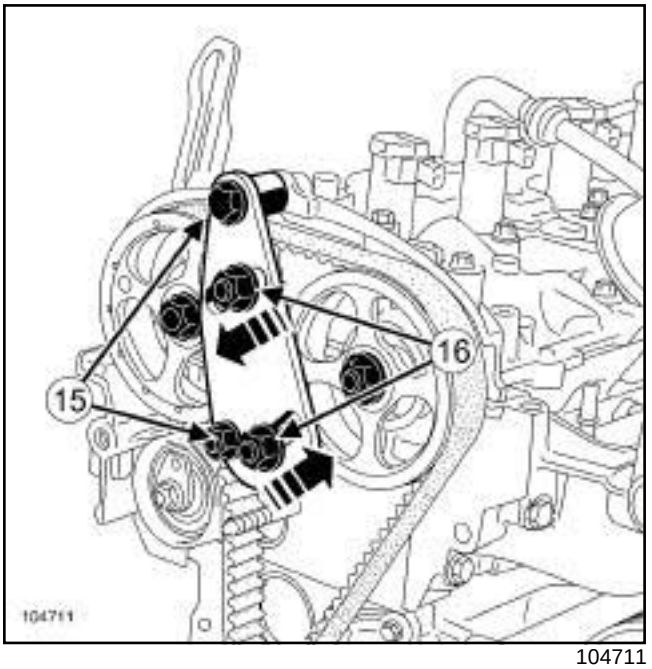

104711

❑ Fit the camshaft pulley locking tool **(Mot. 1509)**.

❑ Tighten the bolt and the collar nut (**15**) .

❑ Bring the cog nuts against the camshaft pulley using the **(Mot. 1509)**.

❑ Torque tighten:

- the **toothed sprocket nuts (80 Nm)** at (**16**) ,
- the **old inlet camshaft pulley nut (30 Nm)**,
- the **old exhaust camshaft pulley nut (30 Nm)**.

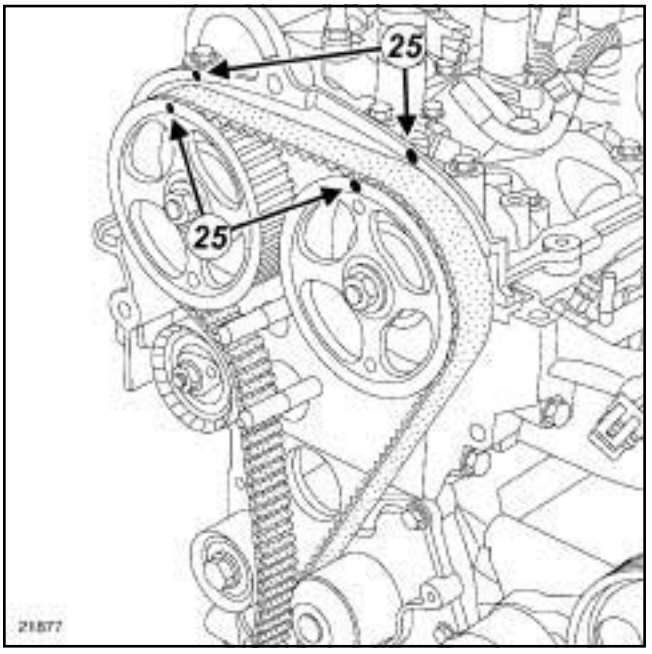

21877

❑ Use a pencil to make marks (**25**) between the camshaft pulleys and the rocker cover.

B84 or C84, and F4R, and 774

❏ Remove the following tools:

- TDC setting pin **(Mot. 1054)**,
- camshaft setting tool **(Mot. 1496)**,
- camshaft pulley setting tool **(Mot. 1509)**.

❏ Rotate the crankshaft clockwise through two revolutions (timing end).

II - CHECKING THE TIMING AND TENSION

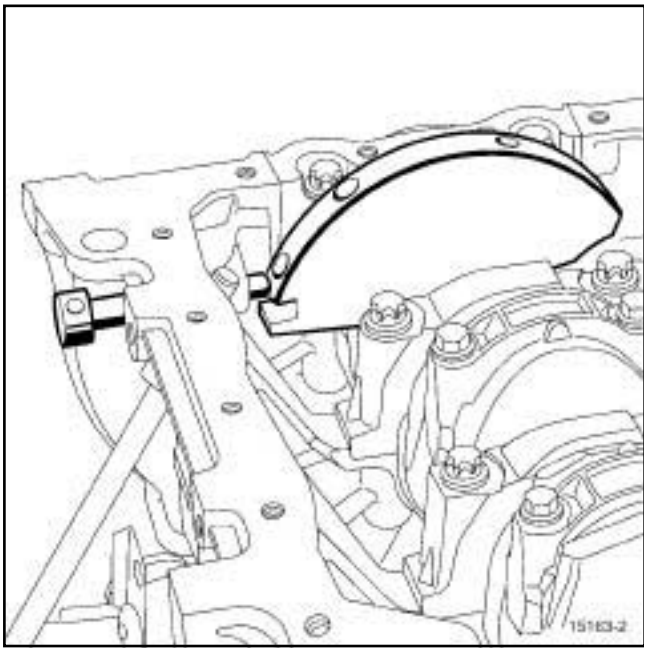

15163-2

❏ Before completing two turns (half a tooth before alignment of the marks made previously by the operator), insert the TDC setting pin **(Mot. 1054)** (so that it is between the balancing hole and the timing hole).

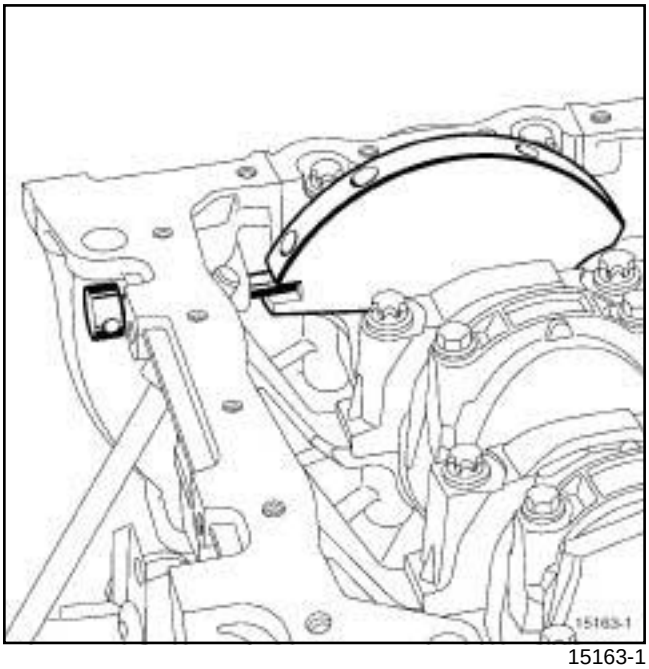

15163-1

❏ Move the timing to its setting point.

❏ Check that the tensioning roller marks are correctly aligned, otherwise repeat the tensioning procedure as follows:

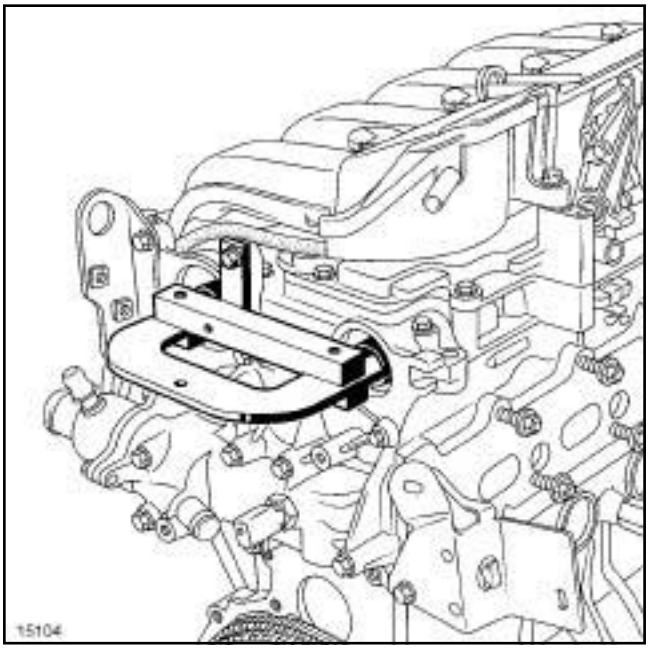

15104

❏ Position the camshaft setting tool **(Mot. 1496)**.

B84 or C84, and F4R, and 774

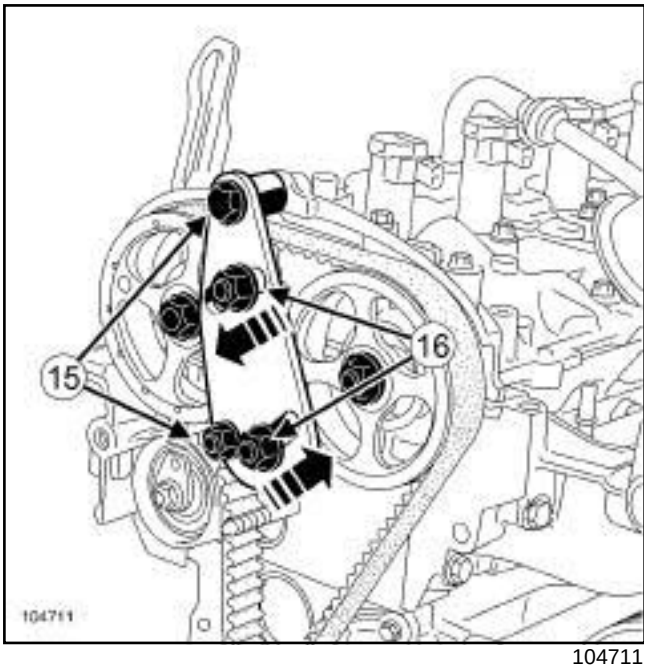

104711

- ❑ Fit the camshaft pulley setting tool **(Mot. 1509)**.
- ❑ Tighten the bolt and the collar nut (**15**) .
- ❑ Bring the cog nuts against the camshaft pulley using the **(Mot. 1509)**.
- ❑ Torque tighten the **toothed sprocket nuts (80 Nm)** at (**16**) .
- ❑ Undo:
  - the old inlet camshaft pulley nut,
  - the old exhaust camshaft pulley nut.
- ❑ Remove the camshaft pulley locking tool **(Mot. 1509)**.

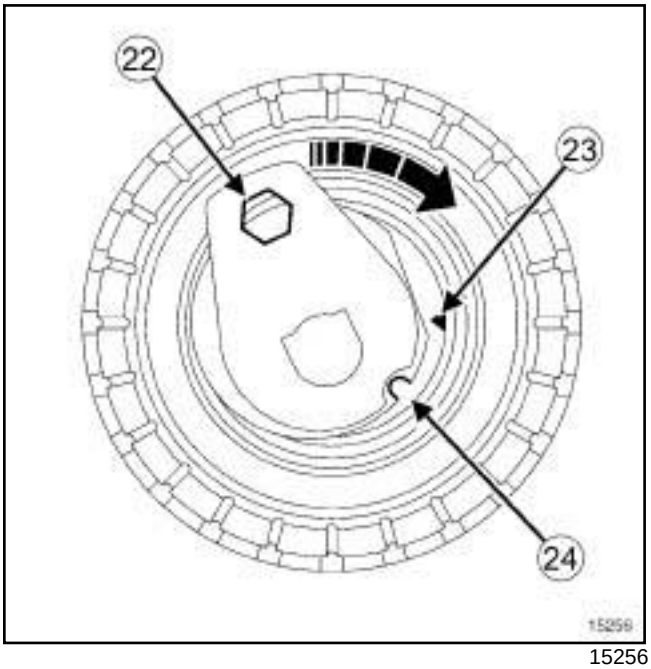

15256

- ❑ Align the marks (**24**) and (**23**) of the tensioning roller using a **6 mm** Allen key at (**22**) .
- ❑ Fully torque tighten the **tensioning roller nut (28 Nm)**.

B84 or C84, and F4R, and 774

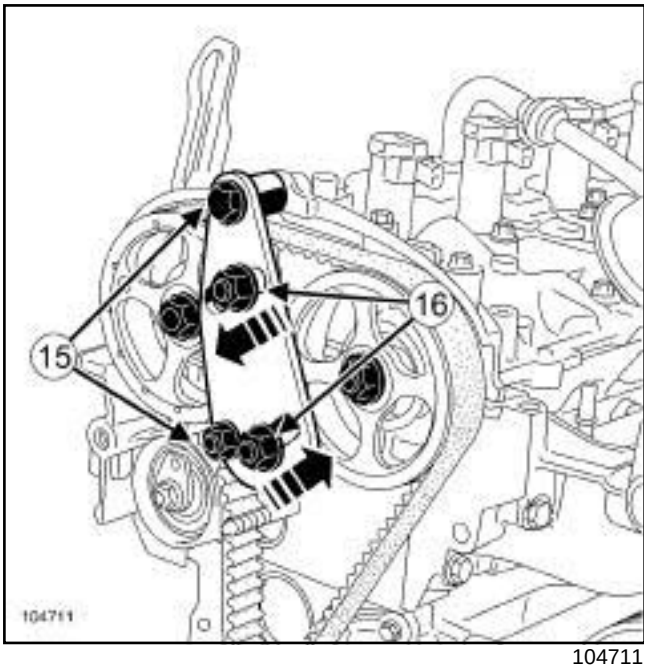

104711

- ❑ Fit the camshaft pulley locking tool **(Mot. 1509)**.
- ❑ Tighten the bolt and the collar nut (**15**) .
- ❑ Offer up the sprocket nuts against the camshaft pulleys.
- ❑ Torque tighten the **toothed sprocket nuts of the tool (Mot. 1509) (80 Nm)** at (**16**) .
- ❑ Remove:
  - the old inlet camshaft pulley nut,
  - the old exhaust camshaft pulley nut.
- ❑ Refit new nuts on the camshaft pulleys.
- ❑ Torque tighten:
  - the **inlet camshaft pulley nut (30 Nm)**,
  - the **exhaust camshaft pulley nut (30 Nm)**.
- ❑ Remove the camshaft setting tool **(Mot. 1496)**.
- ❑ Angle tighten:
  - the **inlet camshaft pulley nut (86° ± 6)**,
  - the **exhaust camshaft pulley nut (86° ± 6°)**.
- ❑ Remove the following tools:
  - TDC setting pin **(Mot. 1054)**,
  - camshaft pulley setting tool **(Mot. 1509)**.
- ❑ Rotate the crankshaft clockwise through two revolutions (timing end).

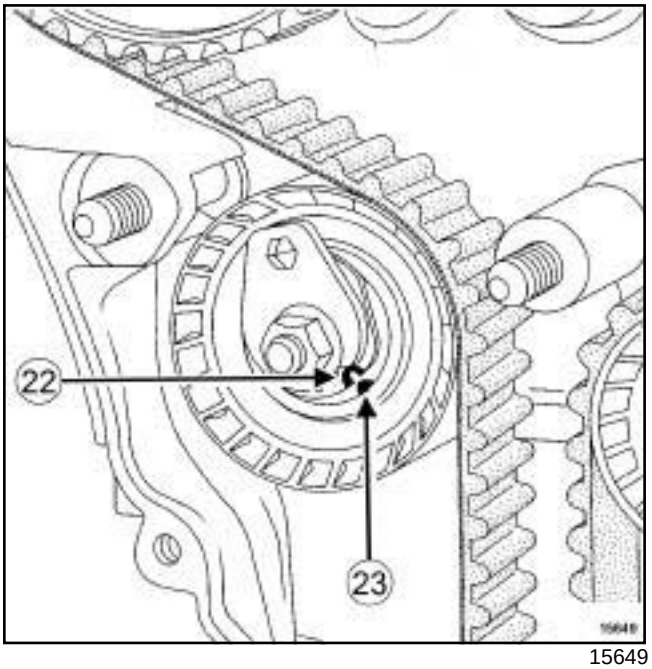

15649

- ❑ Before completing two turns (half a tooth before alignment of the marks made previously by the operator), insert the crankshaft TDC setting pin **(Mot. 1054)** so that it is between the balancing hole and the timing hole.
- ❑ Check that the tensioning roller marks (**22**) and (**23**) are in the correct position before checking the timing setting.

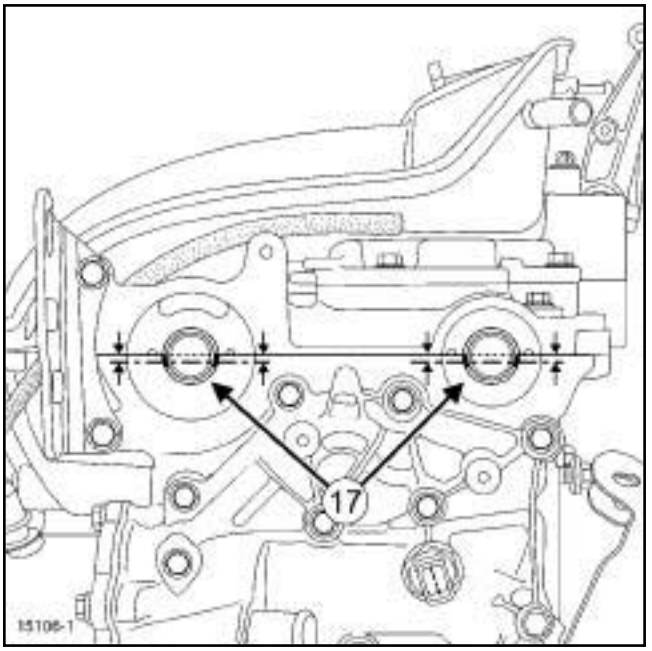

15106-1

- ❑ Check that the offset grooves (**17**) are aligned horizontally below the centre line.

B84 or C84, and F4R, and 774

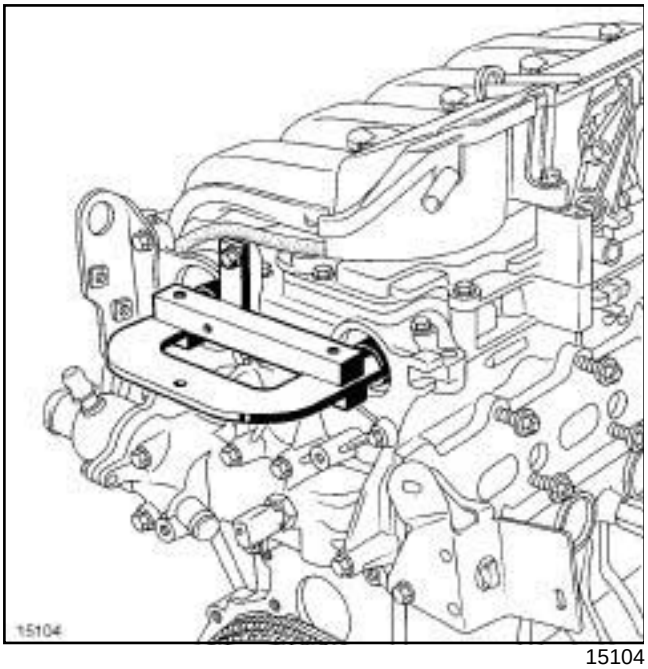

15104

❑ Fit the camshaft setting tool **(Mot. 1496)** (without forcing it).

❑ If the tool cannot be engaged, readjust the timing and the tension.

❑ Refit:

- the lower timing cover,
- the intermediate cover,
- the upper timing cover.

WARNING
The crankshaft accessories pulley and bolt must be replaced.

❑ Lock the flywheel using a screwdriver.

❑ Torque and angle tighten the **crankshaft accessories pulley bolt (40 Nm + 110° ± 10°)**.

WARNING
Do not run the engine without the accessories belt to avoid damaging the crankshaft accessories pulley.

❑ Refit:

- the crankshaft accessories belt (see **11A**, **Top and front of engine**, **Accessories belt: Removal - Refitting**, page **11A-4**) ,
- the TDC pin plug, placing a drop of **MASTIXO** on the thread hole.

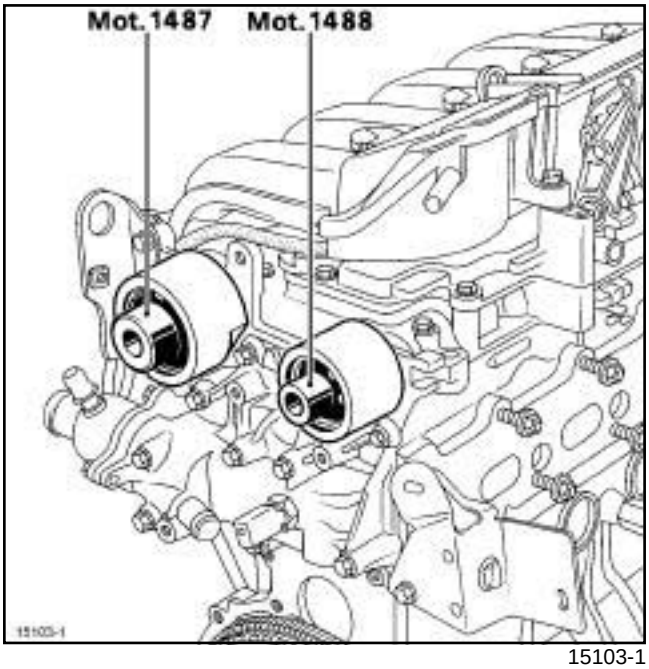

15103-1

❑ Refit:

- new sealing plugs:
  - to the inlet camshaft **(Mot. 1487)**,
  - to the exhaust camshaft **(Mot. 1488)**,
- the suspended engine mounting, observing the marks (see **19D**, **Engine mounting**, **Right-hand suspended engine mounting: Removal - Refitting**, page **19D-20**) ,
- the front right-hand driveshaft (see **Front right-hand wheel driveshaft: Removal - Refitting**) (MR 364, 29A, Driveshafts).

❑ Proceed in the reverse order to removal.

❑ Torque tighten:

- the **suspended mounting linkage mounting bolts (105 Nm)**,
- the **bolts securing the suspended engine mounting cover on the engine (62 Nm)**,
- the **wheel bolts (110 Nm)**,

❑ Connect the battery (see **Battery : Removal - Refitting**) (MR 364, 80A, Battery).

❑ Torque tighten the **battery cover bolts (4 Nm)**.

K4M, and 760 or 761 or 812 or 813

Essential special tooling	
Mot. 1489	TDC locating pin.
Mot. 1368	Tool for tightening tensioner bolt. 8 mm Torx wrench, 12.7 mm square
Mot. 799-01	Timing gear wheel immobiliser.
Mot. 1496	Tool for setting camshaft.
Mot. 1750	Addition to retaining camshaft setting tool Mot. 1496 .
Mot. 1490-01	Locking and adjusting camshaft pulleys.
Mot. 1487	Tool for removing the camshaft covers (57 mm diameter).
Mot. 1488	Tool for removing the camshaft covers (43 mm diameter).

Tightening torques ▽	
timing tension wheel nut	**27 N.m**
timing fixed roller bolt	**50 N.m**
lower timing cover bolts	**12 N.m**
new crankshaft accessories pulley bolt	**40 N.m + 145° ± 15°**
exhaust camshaft sprocket nut	**30 N.m + 84° ± 4**
camshaft dephaser bolt	**100 N.m**
TDC pin plug	**20 N.m**
upper timing cover bolts	**46 N.m**
upper timing cover nuts	**46 N.m**
flywheel end lifting eye bolts	**10 N.m**

IMPORTANT
Wear protective gloves during the operation.

REMOVAL

I - REMOVAL PREPARATION OPERATION

❑ Position the vehicle on a two-post lift (see **Vehicle: Towing and lifting**) (02A, Lifting equipment).

❑ Disconnect the battery (see **Battery: Removal - Refitting**) (80A, Battery).

❑ Remove:

- the windscreen wiper arms (see **Windscreen wiper arm: Removal - Refitting**) (85A, Wiping - Washing),
- the scuttle panel grille (see **Scuttle panel grille: Removal - Refitting**) (56A, Exterior equipment),
- the front right-hand wheel (see **Wheel: Removal - Refitting**) (35A, Wheels and tyres),
- the front section of the front right-hand wheel arch liner (see **Front wheel arch liner: Removal - Refitting**) (55A, Exterior protection),
- the engine undertray bolts,
- the engine undertray,
- the accessories belt (see **11A**, **Top and front of engine**, **Accessories belt: Removal - Refitting**, page **11A-4**) ,
- the right-hand suspended engine mounting (see **19D**, **Engine mounting**, **Right-hand suspended engine mounting: Removal - Refitting**, page **19D-20**) .

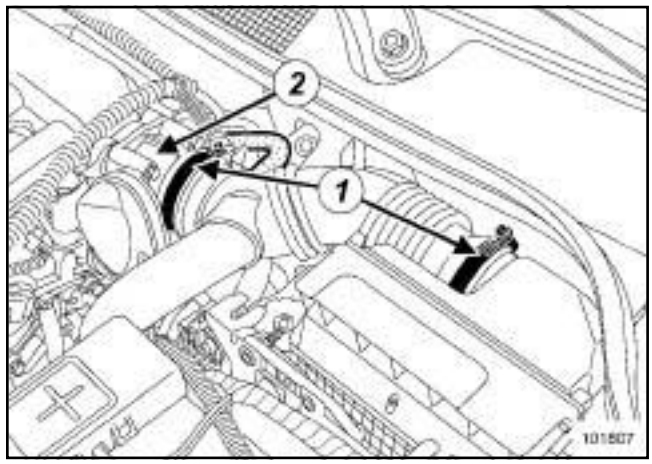

101807

❑ Remove:

- the air pipe at the outlet of the air filter unit (**1**) ,
- the throttle valve (**2**) ,
- the connector on the lifting bracket.

K4M, and 760 or 761 or 812 or 813

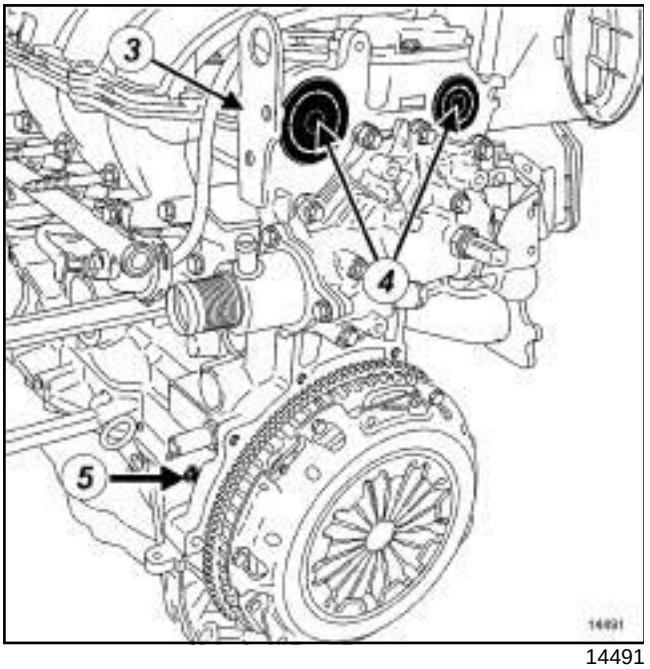

14491

- ❑ Remove the engine lifting eye (**3**) on the flywheel side.
- ❑ Pierce the middle of the plug (**4**) at the end of each camshaft with a screwdriver.
- ❑ Remove:
  - the camshaft plugs using a screwdriver,
  - the TDC pin plug (**5**) .

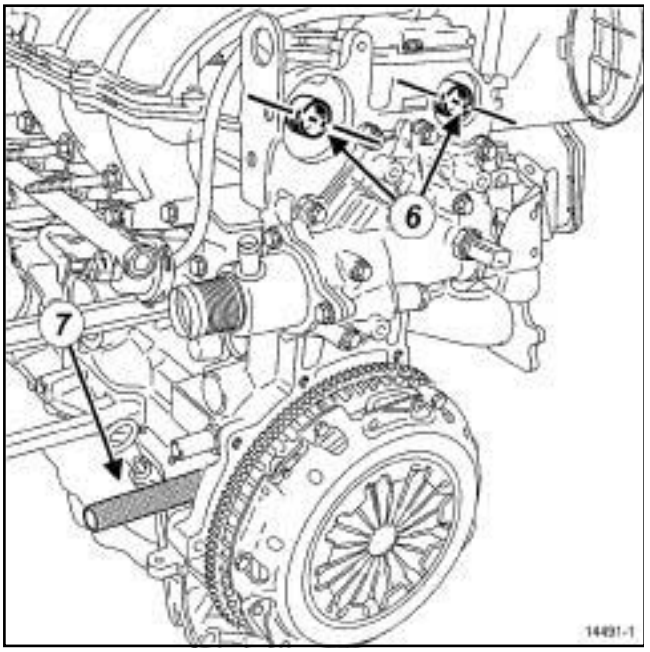

14491-1

- ❑ Position the camshaft grooves (**6**) almost horizontally and offset downwards, turning the crankshaft in its normal operating direction (clockwise, timing end).
- ❑ Screw tool **(Mot. 1489)** (**7**) into the cylinder block.

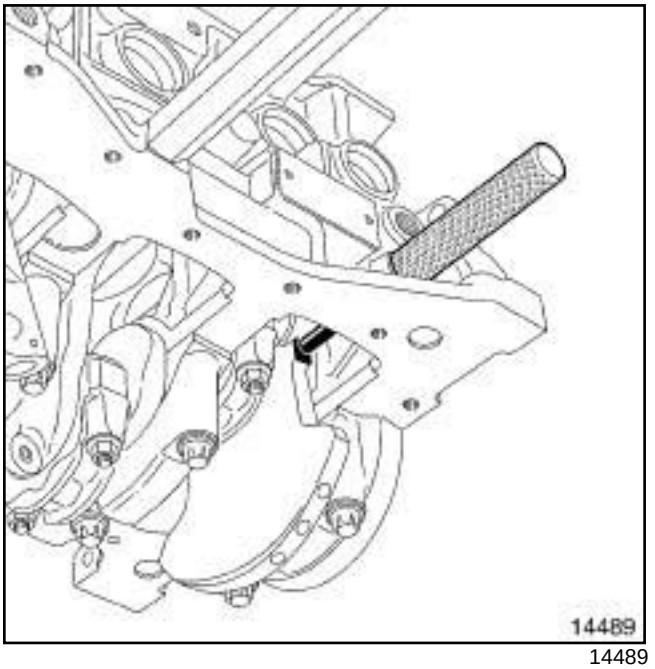

14489

- ❑ Turn the crankshaft in its operating direction (clockwise at timing end), until the crankshaft presses against the tool **(Mot. 1489)**.

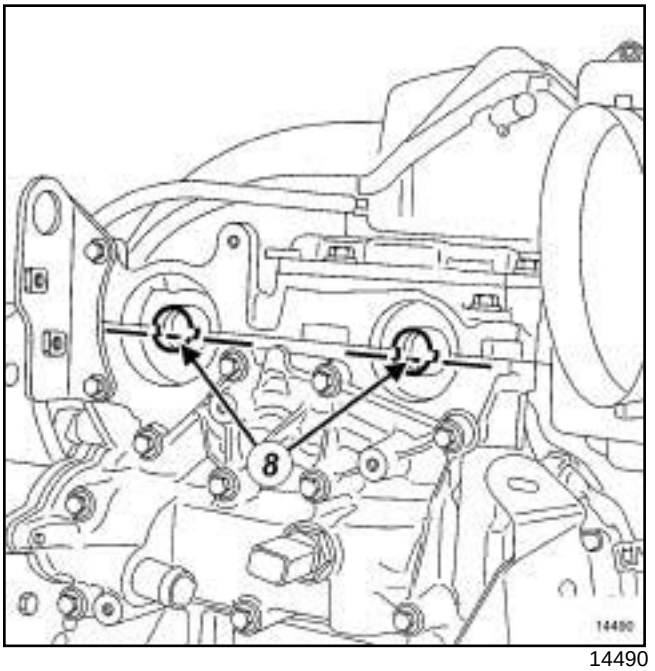

14490

- ❑ Check that the camshaft grooves are horizontal and offset downwards.
- ❑ Remove the tool **(Mot. 1489)** from the cylinder block.
- ❑ Lock the flywheel using a screwdriver.

K4M, and 760 or 761 or 812 or 813

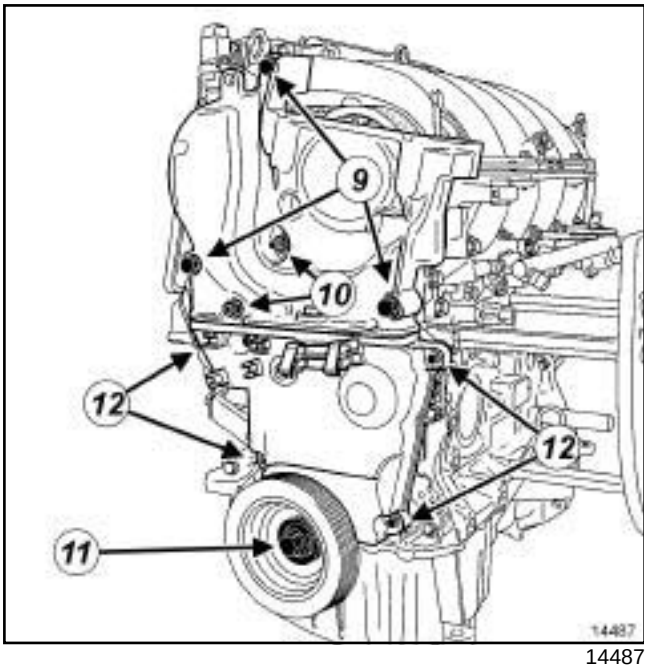

14487

❑ Remove:

- the bolts (**9**) from the upper timing cover,
- the upper timing cover nuts (**10**) ,
- the upper timing cover,
- the crankshaft accessories pulley bolt (**11**) ,
- the crankshaft accessories pulley,
- the bolts (**12**) on the lower timing cover,
- the lower timing cover.

II - OPERATION FOR REMOVAL OF PART CONCERNED

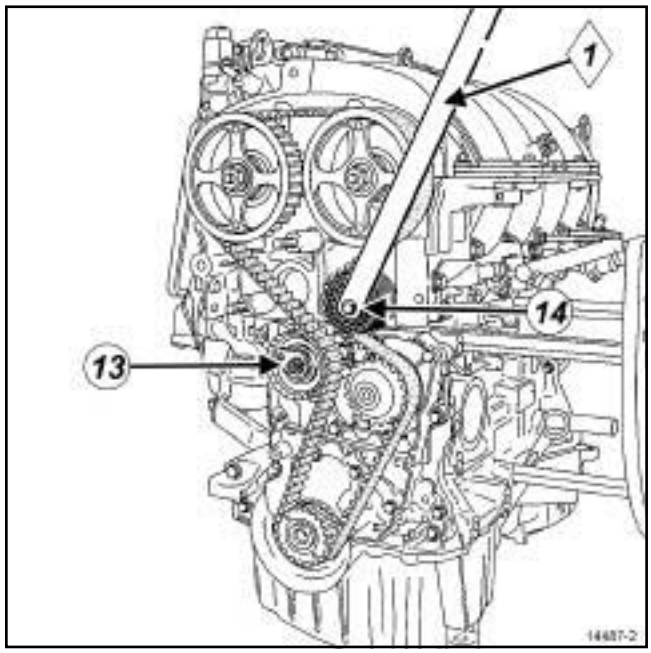

14487-2

❑ Undo the timing tension wheel nut (**13**) .

> Note:
>
> Do not drop the crankshaft timing sprocket when removing the timing belt.

❑ Remove:

- the timing fixed roller bolt (**14**) using the tool **(Mot. 1368)** (**1**) ,
- the timing pulley,
- the timing belt,
- the timing tensioning roller,
- the crankshaft timing sprocket.

K4M, and 760 or 761 or 812 or 813

REFITTING - PROCEDURE 1

I - REFITTING PREPARATION OPERATION

❑ **parts always to be replaced: Timing belt (10,02, 04,02)**,

parts always to be replaced: Timing belt tensioning roller (10,02,04,04),

parts always to be replaced: Timing fixed roller (10,02,04,05),

parts always to be replaced: Crankshaft accessories pulley bolts (10,03,03,10),

parts always to be replaced: Inlet camshaft cap (10,02,02,11),

parts always to be replaced: Exhaust camshaft cap (10,02,02,12),

parts always to be replaced: Throttle valve seal (11,04,06,25).

II - REFITTING OPERATION FOR PART CONCERNED

❑ The first procedure applies to replacing any timing face component which has a crankshaft timing sprocket without a collet and which does not require the exhaust camshaft sprocket or camshaft dephaser to be loosened.

1 - Adjusting the timing

❑

WARNING

Be sure to degrease:

- the end of the crankshaft (timing end),
- the timing sprocket pressure faces and bore of the crankshaft,
- the crankshaft accessories pulley bearing faces,
- the camshaft ends (timing end),
- the camshaft sprocket bores and bearing faces.

This is to avoid timing slippage.

This slippage leads to engine damage.

❑ Set the camshaft grooves horizontally and below the centre line by turning the camshafts with the **(Mot. 799-01)** if necessary.

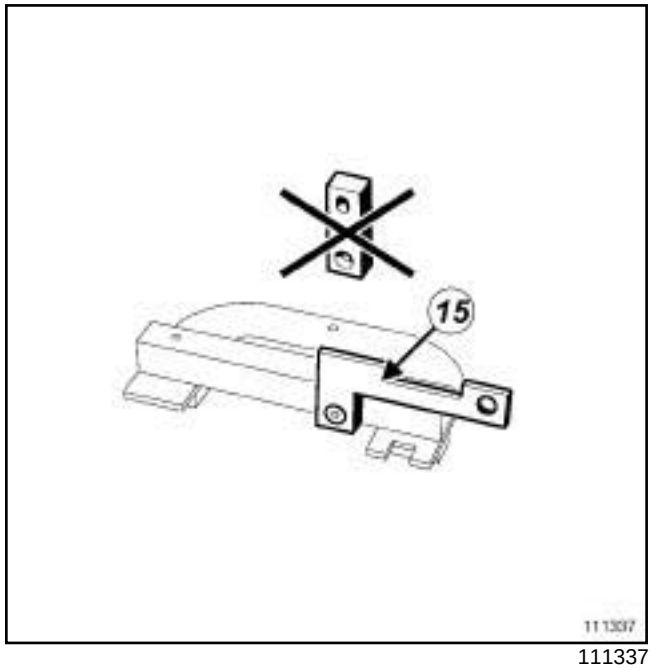

111337

❑ Fit the **(Mot. 1496)** with the **(Mot. 1750)** (**15**) .

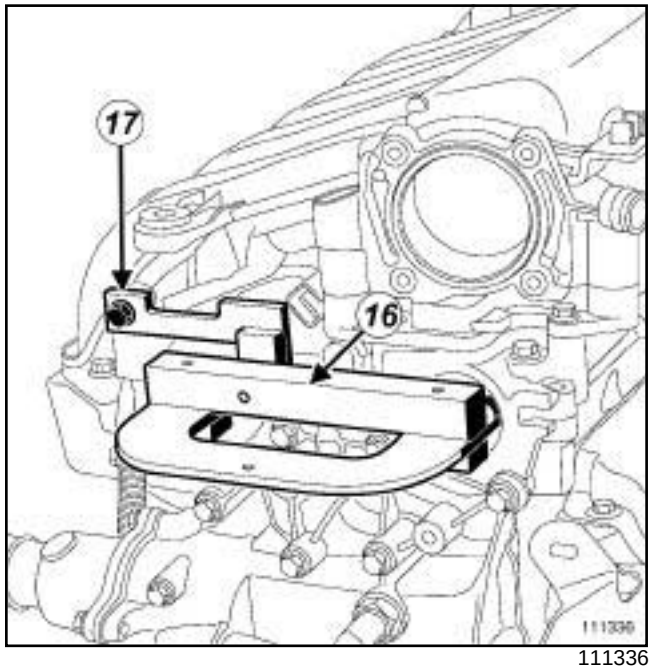

111336

❑ Fit:

- the **(Mot. 1496)** (**16**) fitted with the **(Mot. 1750)** on the end of the camshaft,
- a lifting eye bolt (**17**) to secure the tool **(Mot. 1496)** equipped with the tool **(Mot. 1750)**.

K4M, and 760 or 761 or 812 or 813

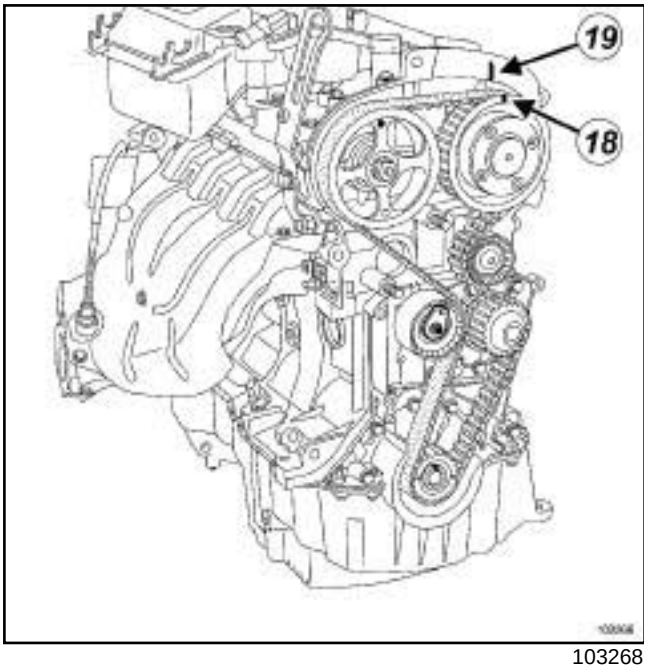

103268

❑ Check that the mark (**18**) on the camshaft dephaser is vertical and pointing upwards.

❑ Make a mark (**19**) with a pencil between the camshaft dephaser gear and the rocker cover.

2 - Refitting

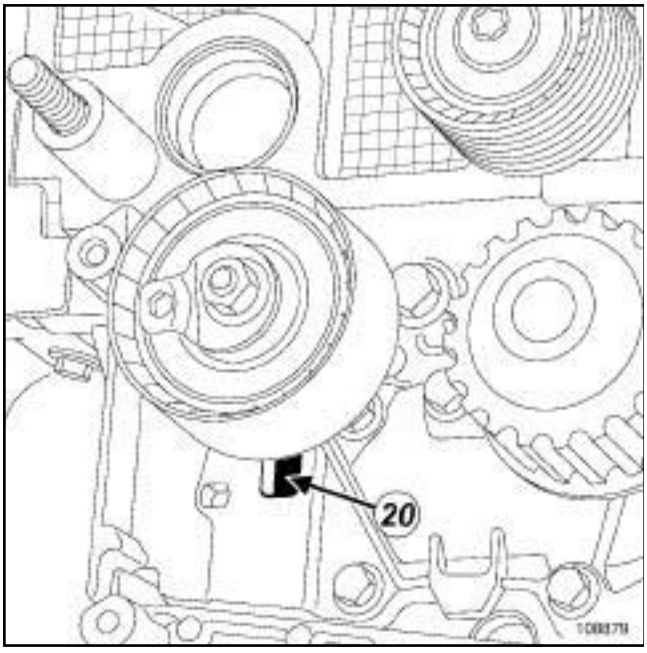

108879

❑ Refit a new timing tensioning roller by positioning the lug of the timing tensioning roller in the groove (**20**) .

❑ Fit the timing tensioning roller nut without tightening it.

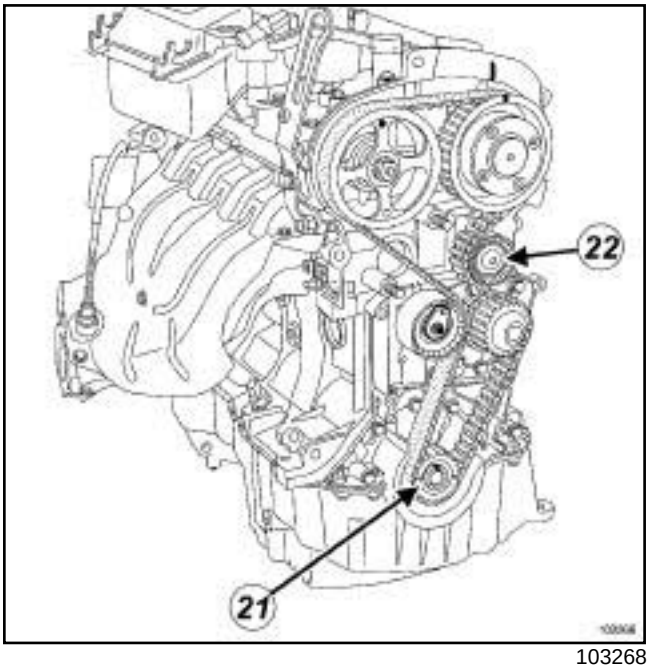

103268

❑ Refit:

- the crankshaft timing sprocket (**21**) ,
- a new timing belt,
- a new timing fixed roller (**22**) .

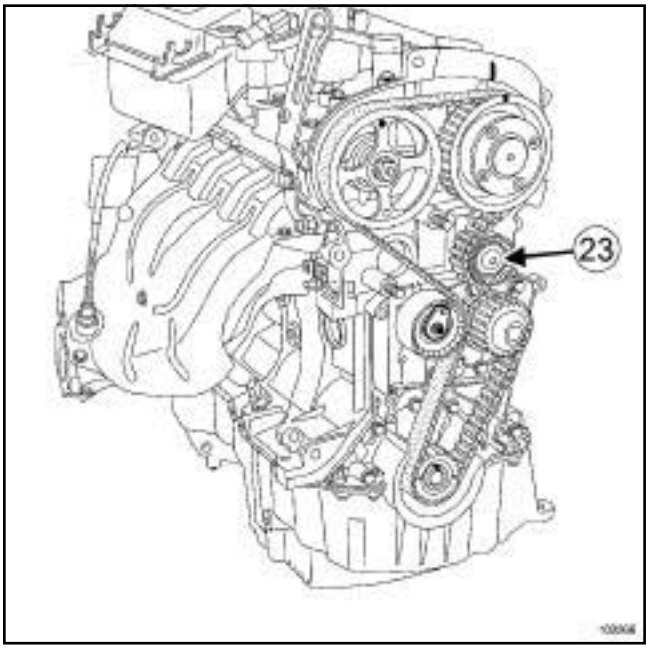

103268

❑ Torque tighten the **timing fixed roller bolt (50 N.m)** (**23**) .

K4M, and 760 or 761 or 812 or 813

3 - Timing belt tension

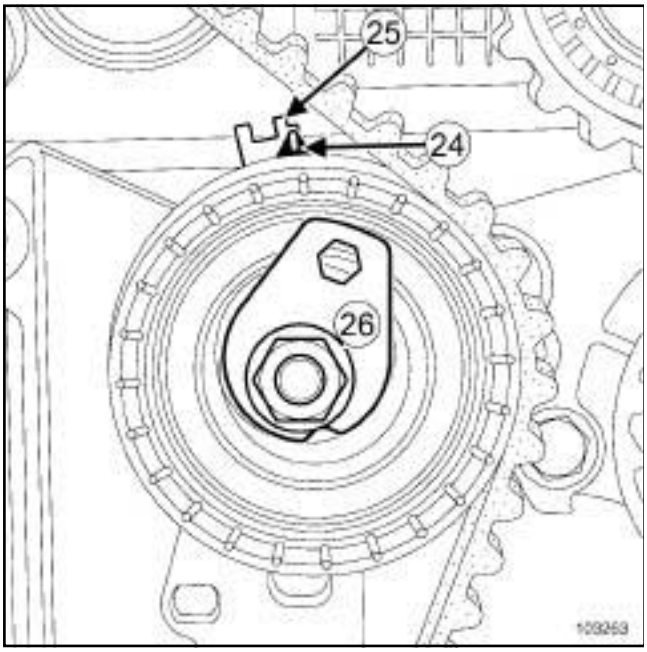

103263

- ❑ Position the adjustable index (**24**) opposite the mark (**25**) , by turning the eccentric (**26**) clockwise using a **6 mm** Allen key.
- ❑ Torque tighten the **timing tensioning roller nut (7 N.m)**.
- ❑ Refit the tool **(Mot. 1489)** on the cylinder block.

Note:

There are two types of lower timing cover:

- without a timing flap,
- with a timing flap.

a - Lower timing cover with a timing flap

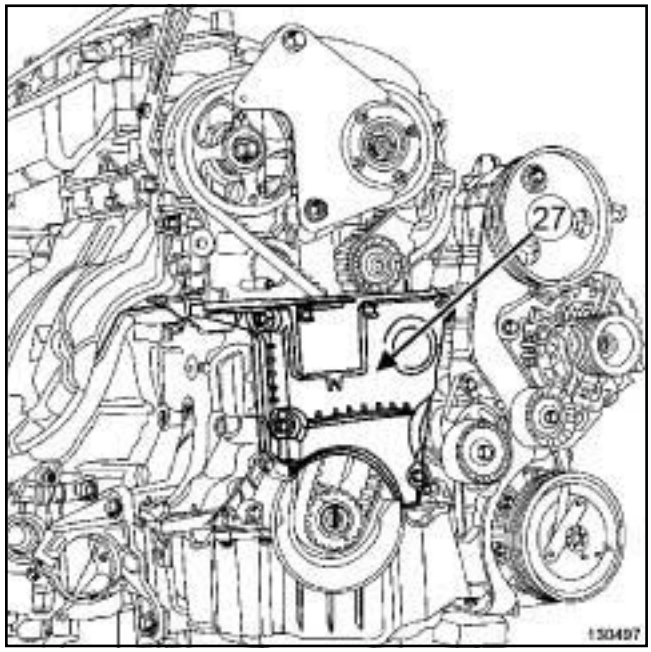

130497

- ❑ Refit the lower timing cover (**27**) .
- ❑ Tighten to torque the **lower timing cover bolts (12 N.m)**.

b - continuation of the refitting procedure regardless of the type of lower timing cover

- ❑ Refit a new crankshaft accessories pulley.

K4M, and 760 or 761 or 812 or 813

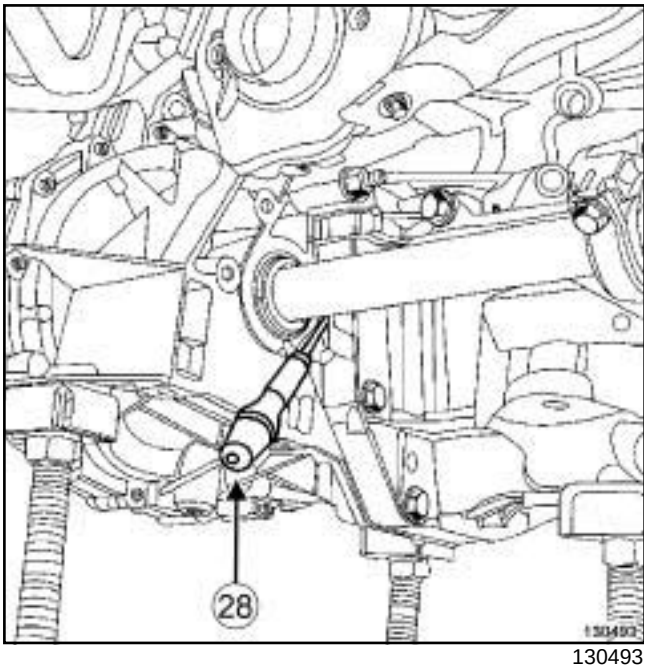

130493

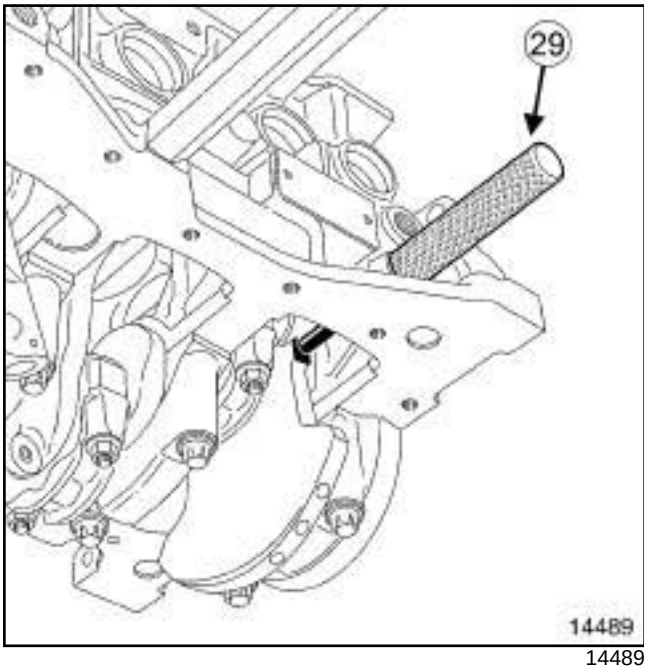

14489

❑ Use a screwdriver (**28**) to check that the flywheel does not turn (clockwise at the timing end), otherwise bring the crankshaft back into contact with the tool **(Mot. 1489)** (**29**) using the screwdriver; the crankshaft groove should be at the top.

❑ Torque and angle tighten a **new crankshaft accessories pulley bolt (40 N.m + 145° ± 15°)** (crankshaft in contact with the tool **(Mot. 1489)**).

c - Lower timing cover with a timing flap

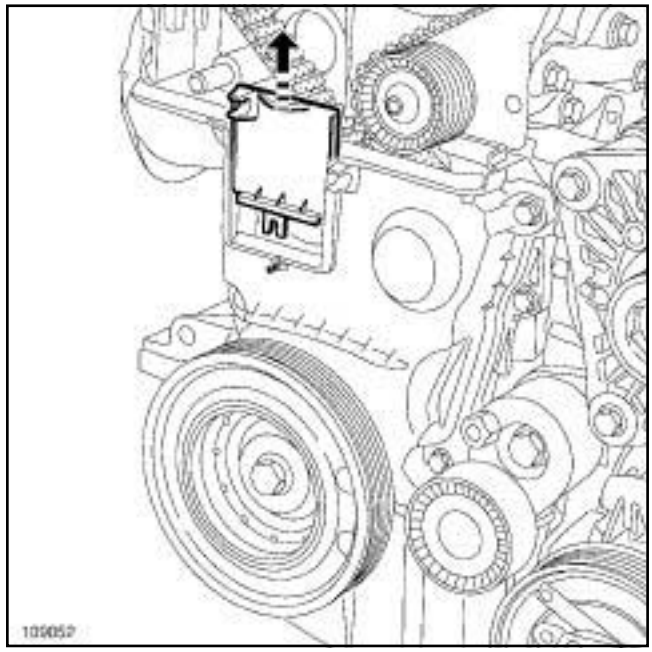

109052

❑ Remove the timing flap from the lower timing cover.

d - continuation of the refitting procedure regardless of the type of lower timing cover

❑ Remove:

- the lifting eye bolt from the **(Mot. 1496)**,
- the timing tool **(Mot. 1496)** fitted with the **(Mot. 1750)**,
- the tool **(Mot. 1489)** from the cylinder block.

4 - Checking the tension

❑ Rotate the crankshaft twice clockwise at the timing end and before aligning the marks made previously by the operator (on the camshaft dephaser), screw the tool **(Mot. 1489)** into the cylinder block.

❑ Move the crankshaft slowly and smoothly until it comes into contact with the tool **(Mot. 1489)**.

❑ Remove the tool **(Mot. 1489)** from the cylinder block.

K4M, and 760 or 761 or 812 or 813

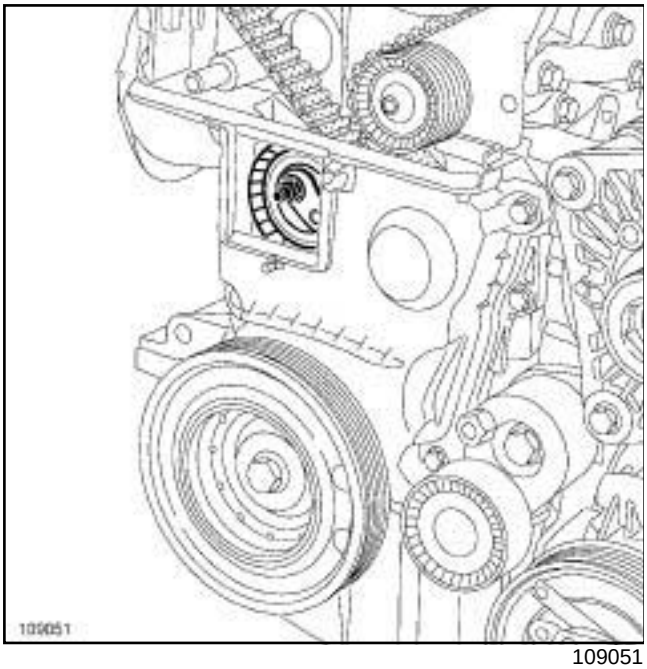

109051

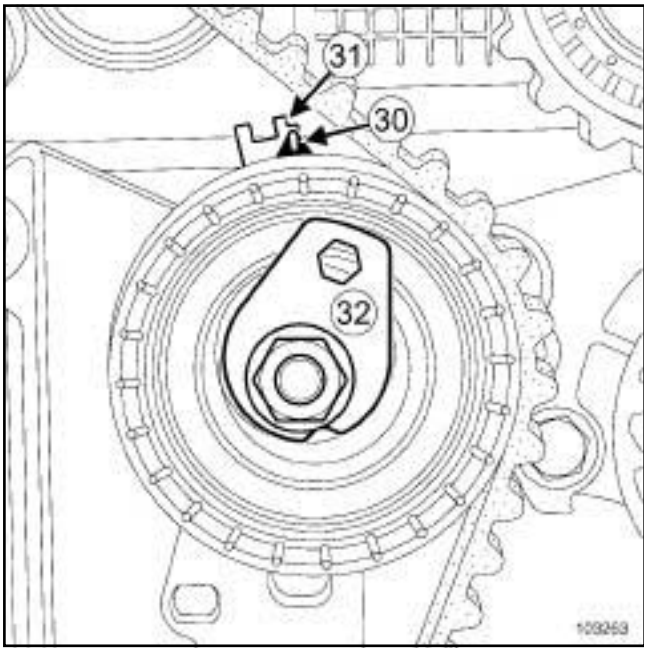

103263

❑ Check through the lower timing cover window that the adjustable index (**30**) is opposite the notch (**31**) , if this is not the case:

- loosen the timing tensioning roller nut by up to one turn while holding the eccentric with a **6 mm** Allen key,
- gradually move the adjustable index marker (**30**) opposite the mark (**31**) turning the eccentric cam (**32**) clockwise.

❑ Torque tighten the **timing tension wheel nut (27 N.m)**.

5 - Checking the timing

❑ Ensure that the index and the notch on the timing tensioning roller are in the correct position before checking the timing.

❑ Screw tool **(Mot. 1489)** into the cylinder block.

❑ Move the crankshaft slowly and smoothly until it comes into contact with the tool **(Mot. 1489)**.

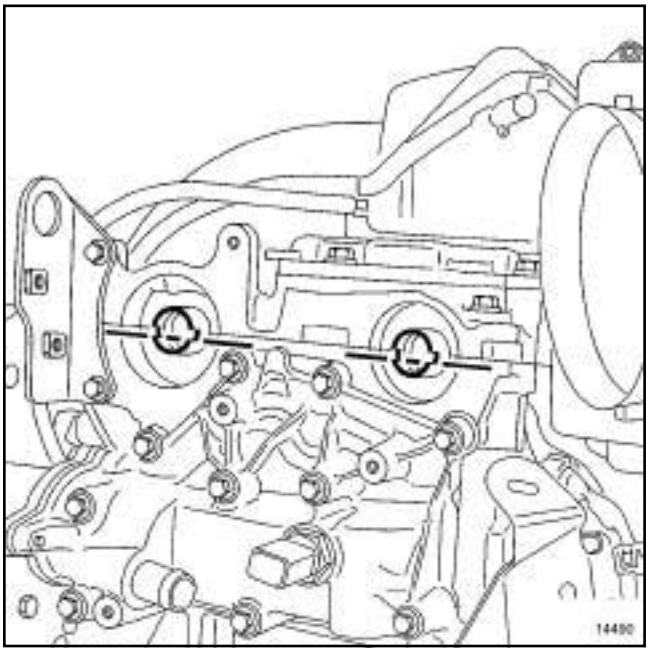

14490

❑ Position (without forcing) the camshaft setting tool **(Mot. 1496)** fitted with the **(Mot. 1750)** (the camshaft end grooves must be horizontal and offset towards the bottom).

> Note:
>
> The timing adjustment and tensioning operation must be repeated if the camshaft setting tool does not engage.

❑ Remove:

- the timing tool **(Mot. 1496)** fitted with the **(Mot. 1750)**,
- the tool **(Mot. 1489)** from the cylinder block.

K4M, and 760 or 761 or 812 or 813

a - Lower timing cover with a timing flap

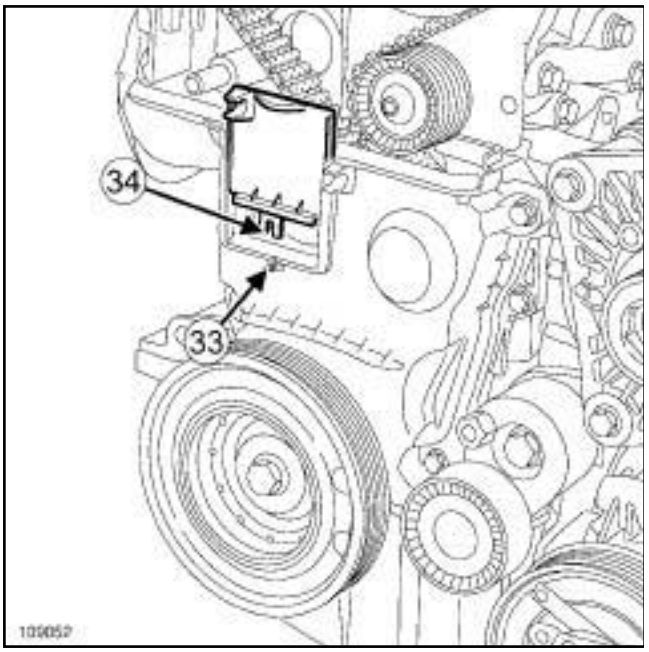

109052

❑ Refit the lower timing cover flap, checking that the locating pin (**33**) fits properly in the notch (**34**) .

b - Lower timing cover without a timing flap

❑ Refit the lower timing cover.

❑ Tighten to torque the **lower timing cover bolts (12 N.m)**.

REFITTING -PROCEDURE 2

I - REFITTING PREPARATION OPERATION

❑ **parts always to be replaced: Timing belt (10,02, 04,02)**,

parts always to be replaced: Timing belt tensioning roller (10,02,04,04),

parts always to be replaced: Timing fixed roller (10,02,04,05),

parts always to be replaced: Crankshaft accessories pulley (10,03,03,07),

parts always to be replaced: Crankshaft accessories pulley bolts (10,03,03,10),

parts always to be replaced: Inlet camshaft cap (10,02,02,11),

parts always to be replaced: Exhaust camshaft cap (10,02,02,12),

parts always to be replaced: Throttle valve seal (11,04,06,25).

II - REFITTING OPERATION FOR PART CONCERNED

❑ The second procedure is used when replacing any timing face component which has a crankshaft timing sprocket with or without a collet, that requires the exhaust camshaft sprocket or camshaft dephaser to be loosened.

❑ Remove the camshaft dephaser (see **11A**, **Top and front of engine**, **Camshaft dephaser: Removal - Refitting**, page **11A-298**) .

1 - Adjusting the timing

❑

Note:

If the stud loosens with the nut (see **11A**, **Top and front of engine**, **Camshaft: Removal - Refitting**, page **11A-172**) (Technical Note 3887A,11A, Top and front of engine).

WARNING

Always degrease:

- the end of the crankshaft (timing end),
- the timing sprocket pressure faces and bore of the crankshaft,
- the crankshaft accessories pulley bearing faces,
- the camshaft ends (timing end),
- the camshaft sprocket bores and bearing faces.

This is to avoid timing slippage.

This slippage leads to engine damage.

K4M, and 760 or 761 or 812 or 813

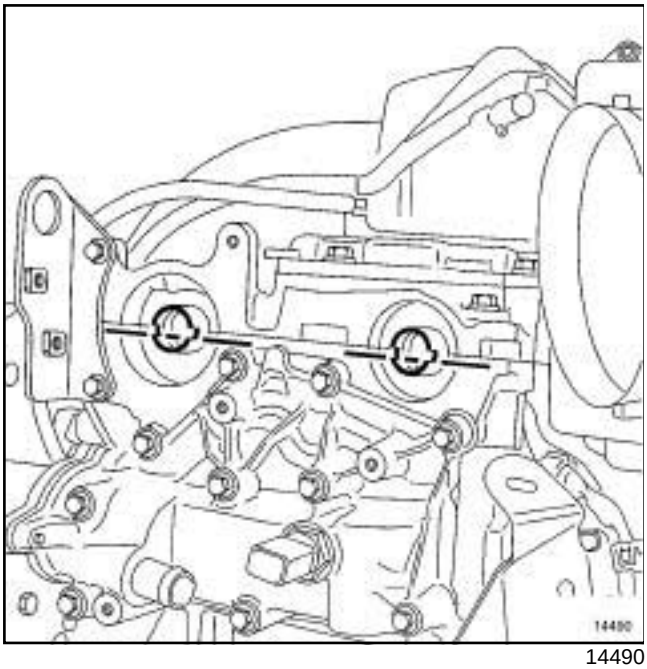

14490

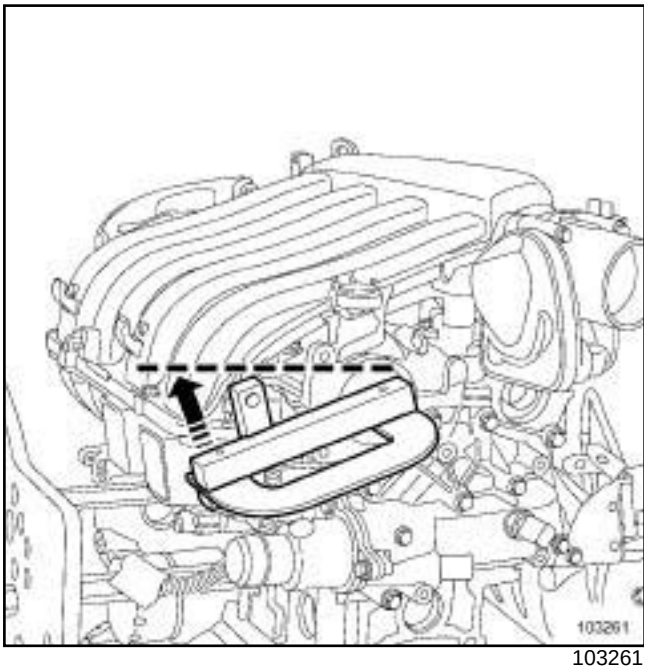

103261

❑ Position the camshaft grooves horizontally and below the centre line, by turning the camshafts with the **(Mot. 1496)** if necessary.

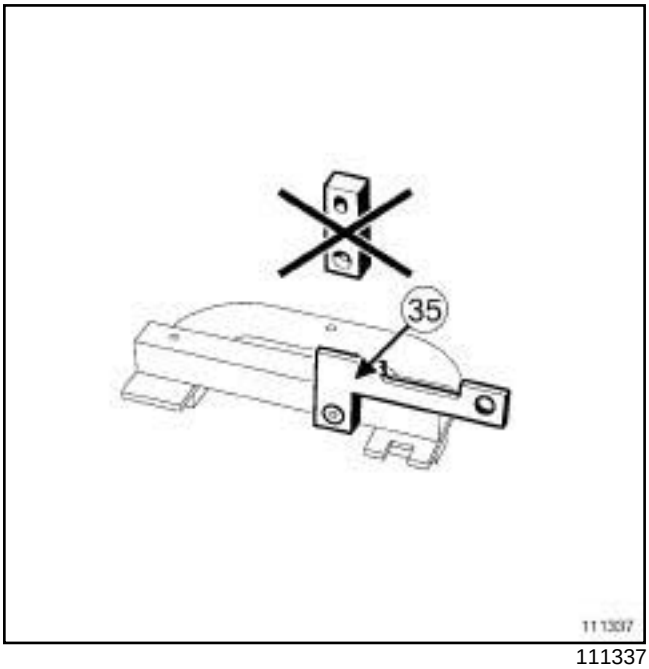

111337

❑ Fit the **(Mot. 1496)** with the **(Mot. 1750)** (**35**) .

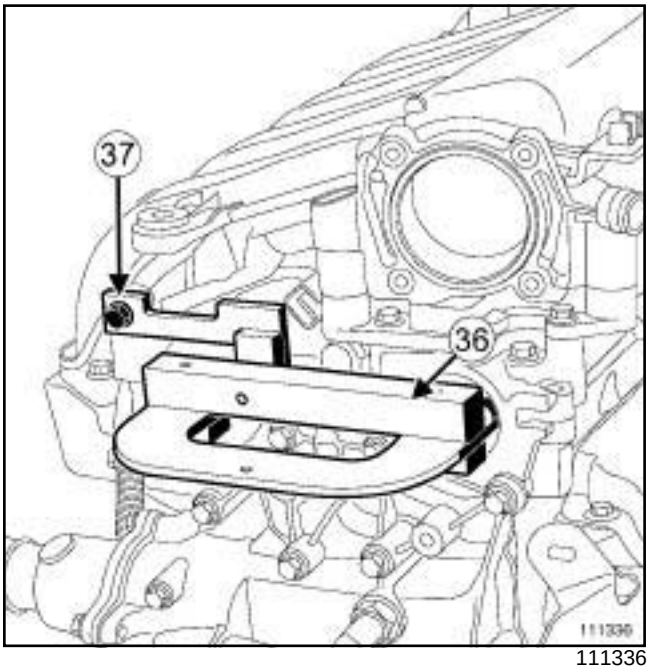

111336

❑ Fit:

- the **(Mot. 1496)** (**36**) fitted with the **(Mot. 1750)** on the end of the camshaft,
- a lifting eye bolt (**37**) to secure the tool **(Mot. 1496)** equipped with the tool **(Mot. 1750)**.

❑ Refit:

- the camshaft dephaser (see **11A**, **Top and front of engine**, **Camshaft dephaser: Removal - Refitting**, page **11A-298**) ,
- the crankshaft timing sprocket.

K4M, and 760 or 761 or 812 or 813

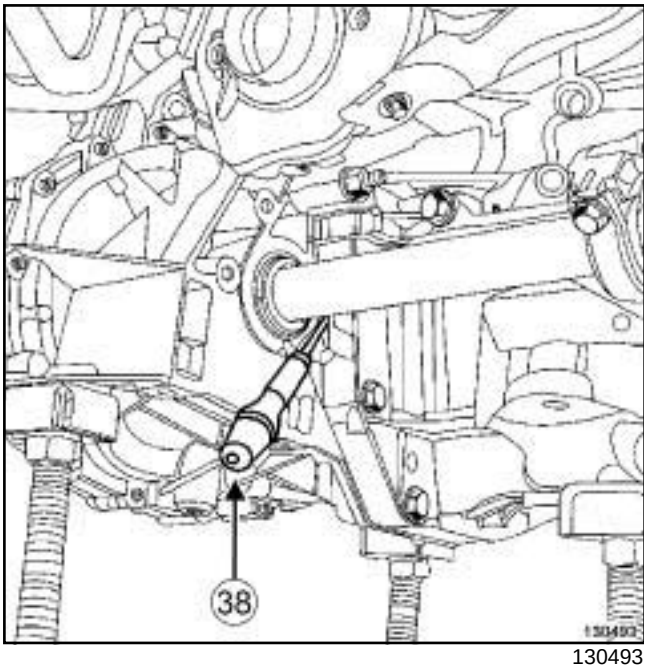

130493

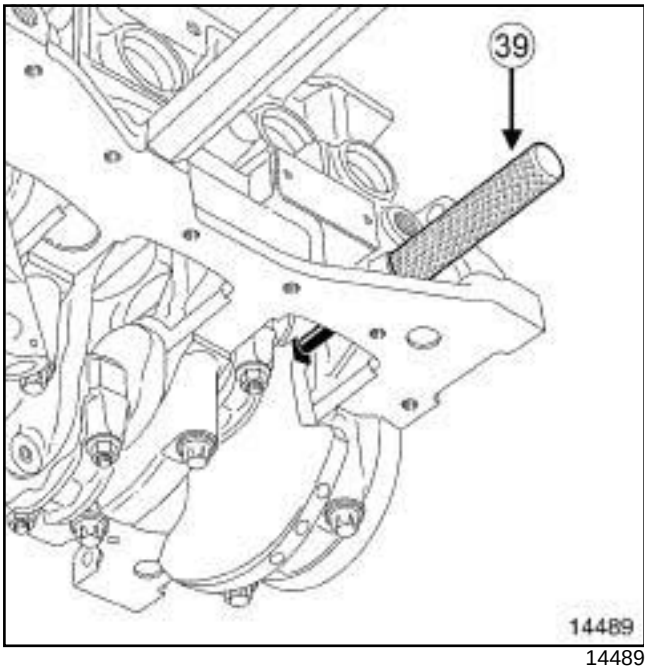

14489

❑ Refit the tool **(Mot. 1489)** on the cylinder block.

❑ Use a screwdriver (**38**) to check that the flywheel does not turn (clockwise at the timing end), otherwise bring the crankshaft back into contact with the tool **(Mot. 1489)** (**39**) using the screwdriver; the crankshaft groove should be at the top.

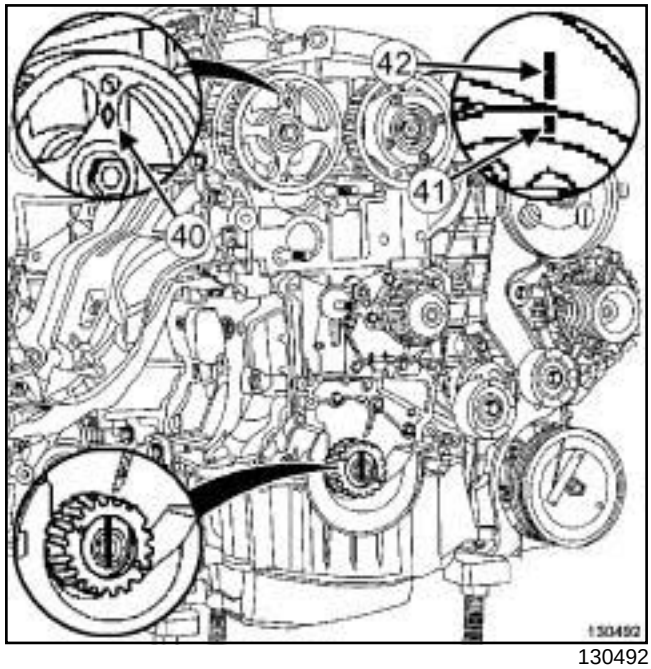

130492

❑ Position:

- the RENAULT badge (**40**) etched on the stem of the exhaust camshaft sprocket vertically and pointing upwards,
- the camshaft dephaser mark (**41**) vertically and pointing upwards.

❑ Make a mark (**42**) with a pencil between the camshaft dephaser gear and the rocker cover.

K4M, and 760 or 761 or 812 or 813

2 - Refitting

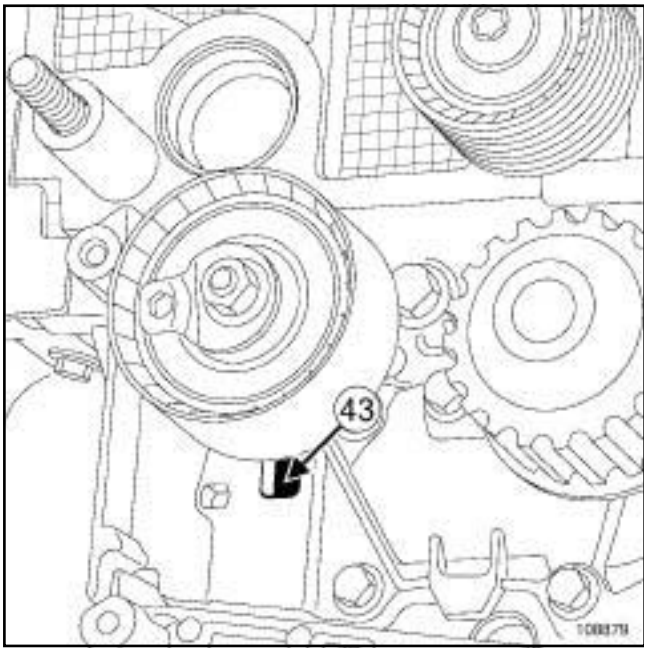

108879

- ❑ Refit a new timing tensioning roller by positioning the lug of the timing tensioning roller in the groove (**43**) .
- ❑ Fit the timing tensioning roller nut without tightening it.

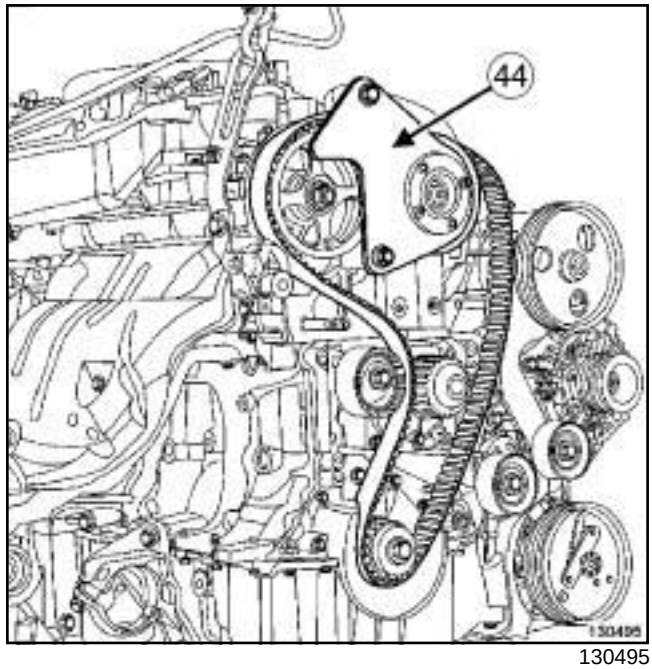

130495

- ❑ Refit a new timing belt starting with the sprocket of each camshaft (without moving the sprocket of each camshaft).
- ❑ Fit the tool **(Mot. 1490-01)** (**44**) on the camshaft sprockets (use the bolt and nut of the upper timing cover to fit the tool **(Mot. 1490-01)**).

Note:

Take care to properly tighten the timing belt between the two camshaft sprockets.

Note:

If the engine is equipped with a crankshaft timing sprocket with a collet, take care to properly tighten the timing belt between the exhaust camshaft sprocket and the crankshaft timing sprocket.

K4M, and 760 or 761 or 812 or 813

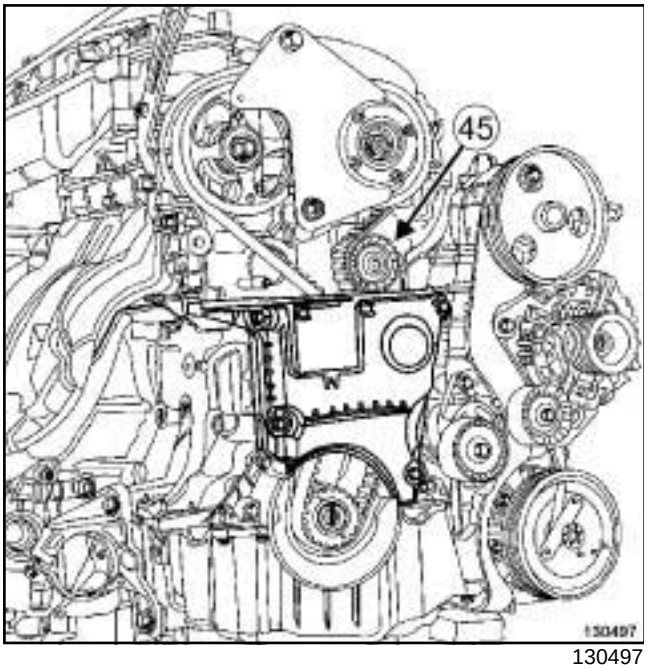

130497

❑ Refit a new timing fixed roller (**45**) .

❑ Torque tighten the **timing fixed roller bolt (50 N.m)**.

3 - Timing belt tension

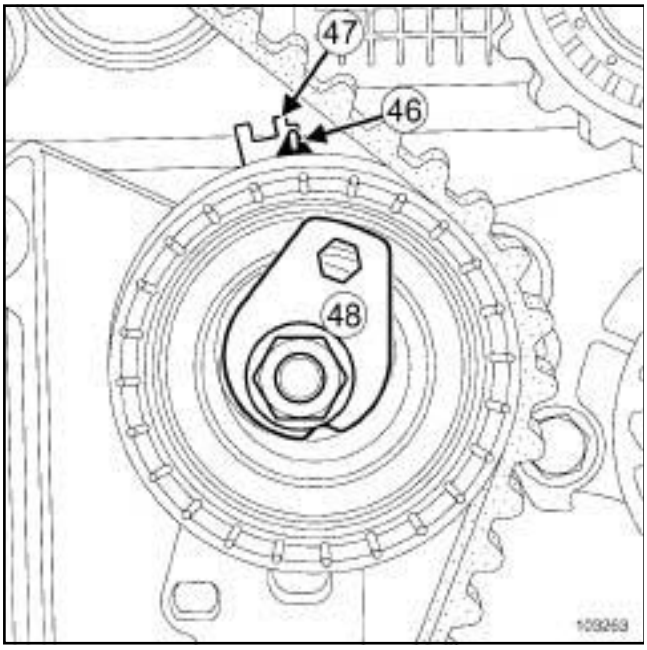

103263

❑ Position the adjustable index (**46**) opposite the mark (**47**) , by turning the eccentric (**48**) clockwise using an Allen key.

❑ Torque tighten the **timing tensioning roller nut (7 N.m)**.

Note:

There are two types of lower timing cover:

- without a timing flap,

- with a timing flap.

a - Lower timing cover with a timing flap

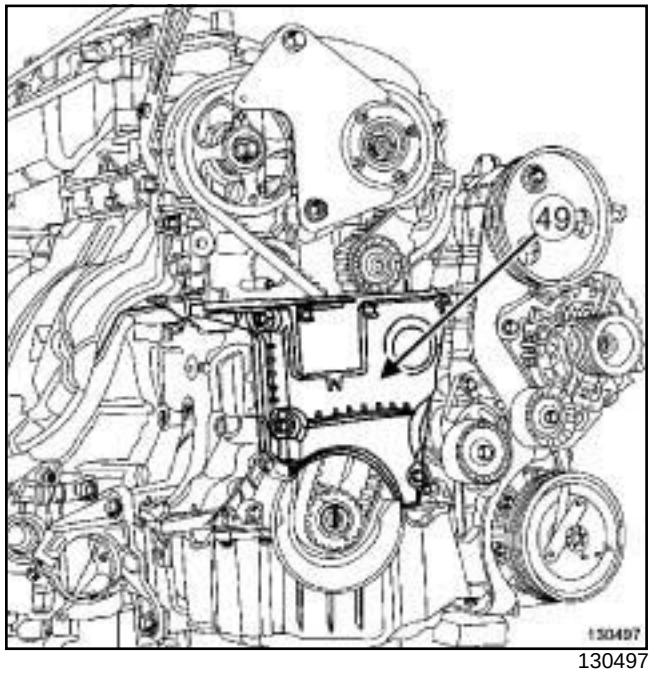

130497

❑ Refit the lower timing cover (**49**) .

❑ Tighten to torque the **lower timing cover bolts (12 N.m)**.

b - continuation of the refitting procedure regardless of the type of lower timing cover

❑ Refit a new crankshaft accessories pulley.

❑ Torque tighten:

- and angle tighten a **new crankshaft accessories pulley bolt (40 N.m + 145° ± 15°)**,

- and angle tighten the **exhaust camshaft sprocket nut (30 N.m + 84° ± 4)**,

- the **camshaft dephaser bolt (100 N.m)**.

❑ Refit the camshaft dephaser plug.

K4M, and 760 or 761 or 812 or 813

c - Lower timing cover with a timing flap

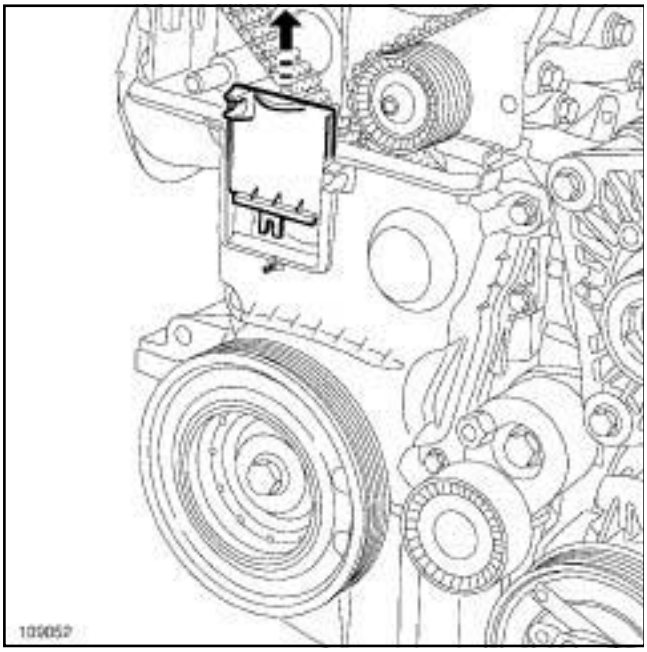

109052

❑ Refit the timing flap on the lower timing cover.

d - continuation of the refitting procedure regardless of the type of lower timing cover

❑ Remove:

- the lifting eye bolt from the **(Mot. 1496)**,
- the **(Mot. 1496)** fitted with the **(Mot. 1750)**,
- the tool **(Mot. 1489)** from the cylinder block,
- the **(Mot. 1490-01)**.

4 - Checking the tension

❑ Rotate the crankshaft twice clockwise at the timing end and before aligning the marks made previously by the operator (on the camshaft dephaser), screw the tool **(Mot. 1489)** into the cylinder block.

❑ Move the crankshaft slowly and smoothly until it comes into contact with the tool **(Mot. 1489)**.

❑ Remove the tool **(Mot. 1489)**.

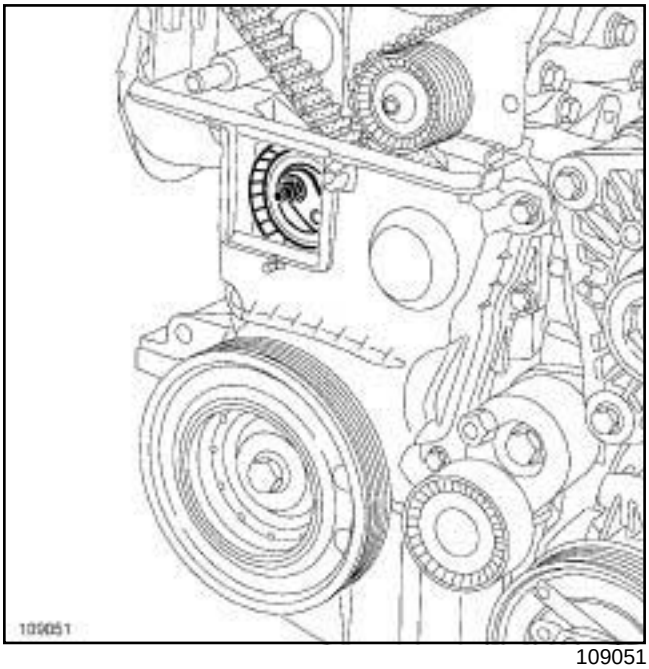

109051

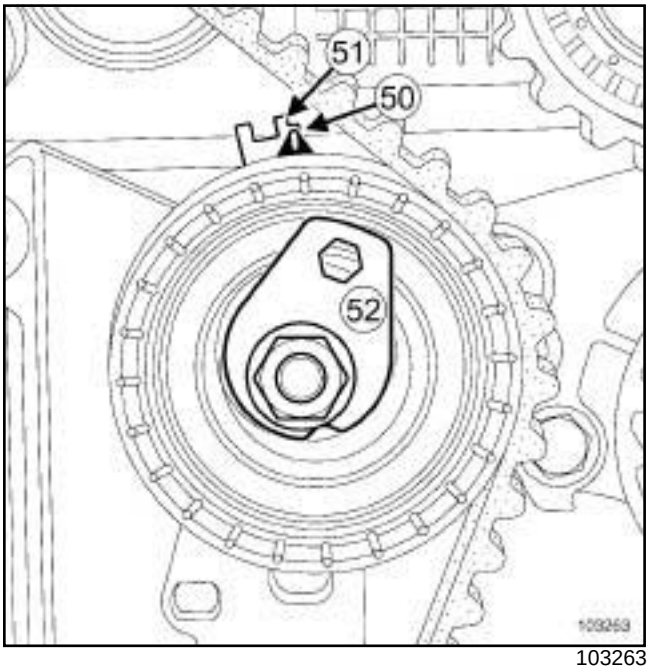

103263

❑ Check through the lower timing cover window that the adjustable index (**50**) is opposite the notch (**51**) , if this is not the case:

- loosen the timing tensioning roller nut by up to one turn while holding the eccentric with an Allen key,
- gradually move the adjustable index marker (**50**) opposite the mark (**51**) turning the eccentric cam (**52**) clockwise.

❑ Torque tighten the **timing tensioning roller nut (27 N.m)**.

K4M, and 760 or 761 or 812 or 813

5 - Checking the timing

❑ Ensure that the index and the notch on the timing tensioning roller are in the correct position before checking the timing.

❑ Screw tool **(Mot. 1489)** into the cylinder block.

❑ Move the crankshaft slowly and smoothly until it comes into contact with the tool **(Mot. 1489)**.

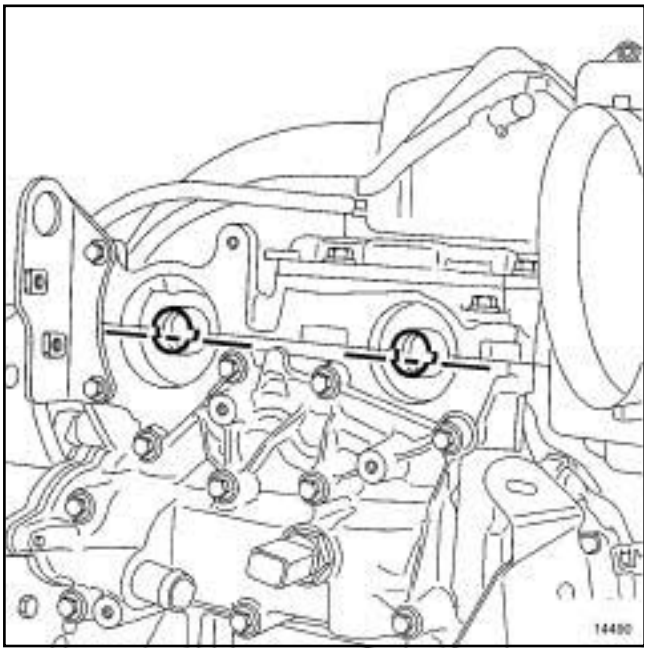

14490

❑ Position (without forcing) the tool **(Mot. 1496)** equipped with the tool **(Mot. 1750)** (the camshaft end grooves must be horizontal and offset downwards).

> Note:
>
> If the tool **(Mot. 1496)** equipped with the tool **(Mot. 1750)** cannot be engaged, readjust the timing and the tension.

❑ Remove:

- the timing tool **(Mot. 1496)** fitted with the **(Mot. 1750)**,
- the tool **(Mot. 1489)** from the cylinder block.

a - Lower timing cover with a timing flap

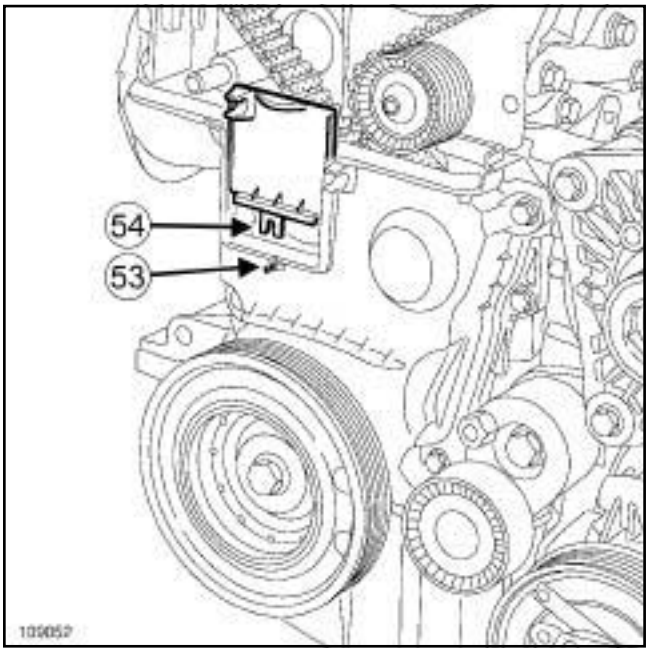

109052

❑ Refit the lower timing cover flap, checking that the locating pin (**53**) fits properly in the notch (**54**) .

b - Lower timing cover without a timing flap

❑ Refit the lower timing cover.

❑ Tighten to torque the **lower timing cover bolts (12 N.m)**.

III - FINAL OPERATION

❑ Apply a drop of **SILICONE ADHESIVE SEALANT** (see **Vehicle: Parts and ingredients for the repairwork**) (04B, Consumables - Products) to the thread of the TDC setting pin plug.

❑ Tighten to torque the **TDC pin plug (20 N.m)**.

❑ Refit the upper timing cover.

❑ Torque tighten:

- the **upper timing cover bolts (46 N.m)**,
- the **upper timing cover nuts (46 N.m)**.

❑ Refit:

- a new inlet camshaft plug using the **(Mot. 1487)**,
- a new exhaust camshaft plug using the **(Mot. 1488)**,
- the eye for lifting the engine at the flywheel end.

❑ Torque tighten the **flywheel end lifting eye bolts (10 N.m)**.

K4M, and 760 or 761 or 812 or 813

❏ Refit:

- the connector from the lifting bracket,
- the throttle valve,
- the air pipe at the outlet of the air filter unit,
- the right-hand suspended engine mounting (see **19D**, **Engine mounting**, **Right-hand suspended engine mounting: Removal - Refitting**, page **19D-20**) ,
- the accessories belt (see **11A**, **Top and front of engine**, **Accessories belt: Removal - Refitting**, page **11A-4**) ,
- the engine undertray,
- the front section of the front right-hand wheel arch liner (see **Front wheel arch liner: Removal - Refitting**) (55A, Exterior protection),
- the front right-hand wheel (see **Wheel: Removal - Refitting**) (35A, Wheels and tyres),
- the scuttle panel grille (see **Scuttle panel grille: Removal - Refitting**) (56A, Exterior equipment),
- the windscreen wiper arms (see **Windscreen wiper arm: Removal - Refitting**) (85A, Wiping - Washing).

❏ Connect the battery (see **Battery : Removal - Refitting**) (80A, Battery).

B84 or C84 or G84 or S84, and K4M, and 680 or 762 or 764 or 768 or 788 or 856 – B84 or C84 or G84 or K84 or L84 or S84, and K4J

Essential special tooling	
Mot. 1489	TDC locating pin.
Mot. 1368	Tool for tightening tensioner bolt. 8 mm Torx wrench, 12.7 mm square
Mot. 799-01	Timing gear wheel immobiliser.
Mot. 1496	Tool for setting camshaft.
Mot. 1750	Addition to retaining camshaft setting tool Mot. 1496 .
Mot. 1490-01	Locking and adjusting camshaft pulleys.
Mot. 1487	Tool for removing the camshaft covers (57 mm diameter).
Mot. 1488	Tool for removing the camshaft covers (43 mm diameter).

Tightening torques ▽	
new crankshaft accessories pulley bolt	**40 N.m + 145° ± 15°**
timing tension wheel nut	**27 N.m**
timing fixed roller bolt	**50 N.m**
lower timing cover bolts	**12 N.m**
nut of each camshaft sprocket	**30 N.m + 84° ± 4°**
TDC pin plug	**20 N.m**
upper timing cover bolts	**46 N.m**
upper timing cover nuts	**46 N.m**
flywheel end lifting eye bolts	**10 N.m**

IMPORTANT
Wear protective gloves during the operation.

REMOVAL

I - REMOVAL PREPARATION OPERATION

❑ Position the vehicle on a two-post lift (see **Vehicle: Towing and lifting**) (02A, Lifting equipment).

❑ Disconnect the battery (see **Battery : Removal - Refitting**) (80A, Battery).

❑ Remove:

- the windscreen wiper arms (see **Windscreen wiper arm: Removal - Refitting**) (85A, Wiping - Washing),
- the scuttle panel grille (56A, Exterior equipment), (see **19D**, **Engine mounting**, **Right-hand suspended engine mounting: Removal - Refitting**, page **19D-20**)
- the front right-hand wheel (see **Wheel: Removal - Refitting**) (35A, Wheels and tyres),
- the front section of the front right-hand wheel arch liner (see **Front wheel arch liner: Removal - Refitting**) (55A, Exterior protection),
- the engine undertray bolts,
- the engine undertray,
- the accessories belt (see **11A**, **Top and front of engine**, **Accessories belt: Removal - Refitting**, page **11A-4**) .
- (see **19D**, **Engine mounting**, **Right-hand suspended engine mounting: Removal - Refitting**, page **19D-20**)

B84 or C84 or G84 or S84, and K4M, and 680 or 762 or 764 or 768 or 788 or 856 – B84 or C84 or G84 or K84 or L84 or S84, and K4J

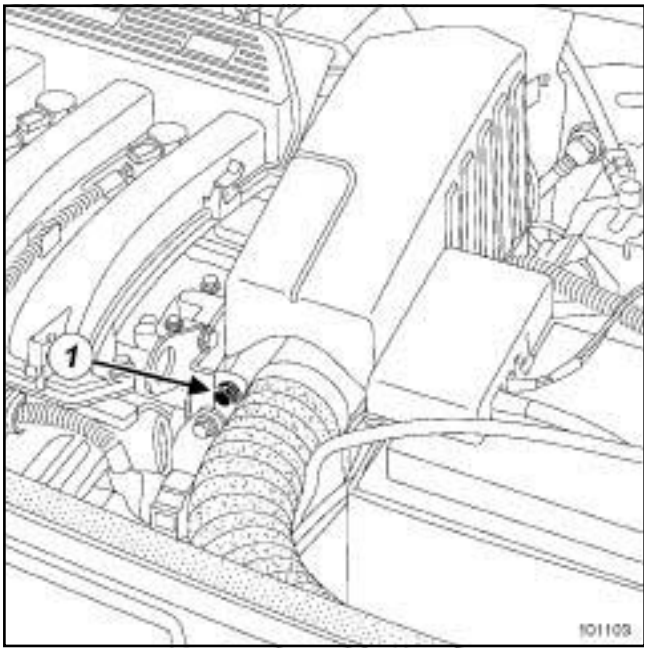

101103

❑ Remove:

- the bolt (**1**) from the air resonator,
- the air resonator.

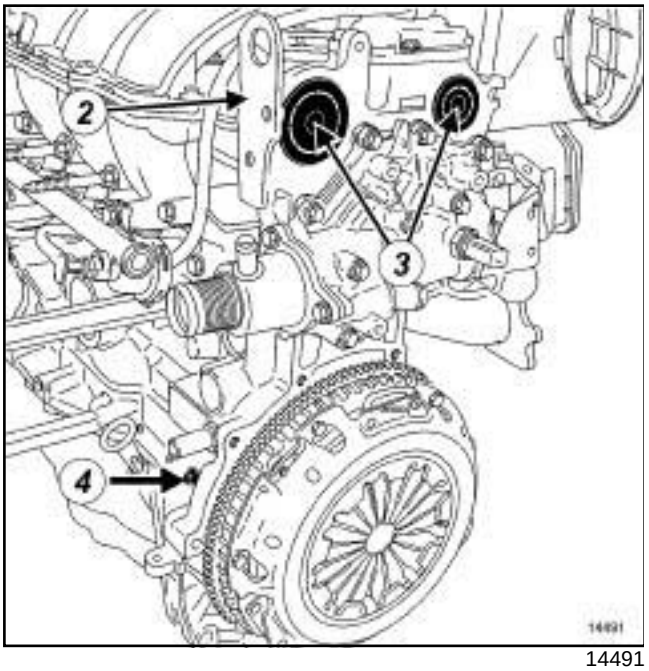

14491

❑ Remove the engine lifting eye (**2**) on the flywheel side.

❑ Pierce the middle of the plug (**3**) at the end of each camshaft with a screwdriver.

❑ Remove:

- the plug at the end of each camshaft with a screwdriver,
- the TDC pin plug (**4**) .

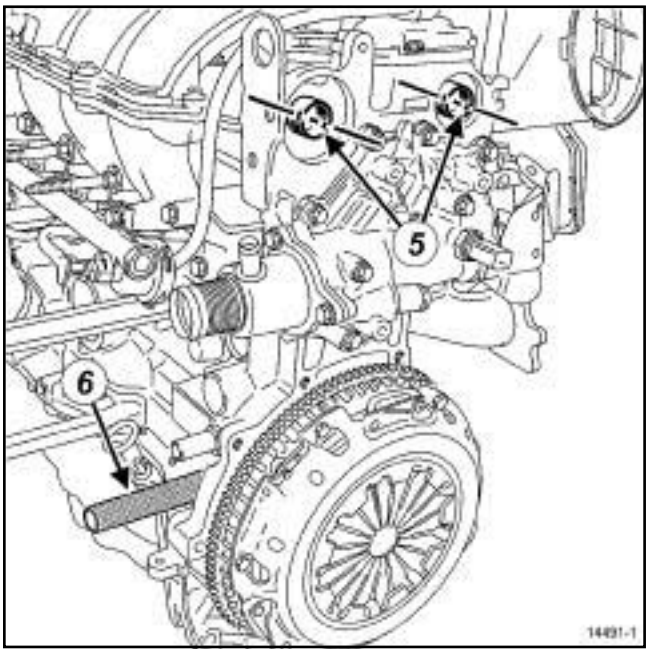

14491-1

❑ Position the camshaft grooves (**5**) almost horizontally and offset towards the bottom turning the crankshaft in the operating direction (clockwise at timing end).

❑ Screw tool (**6**) **(Mot. 1489)** into the cylinder block.

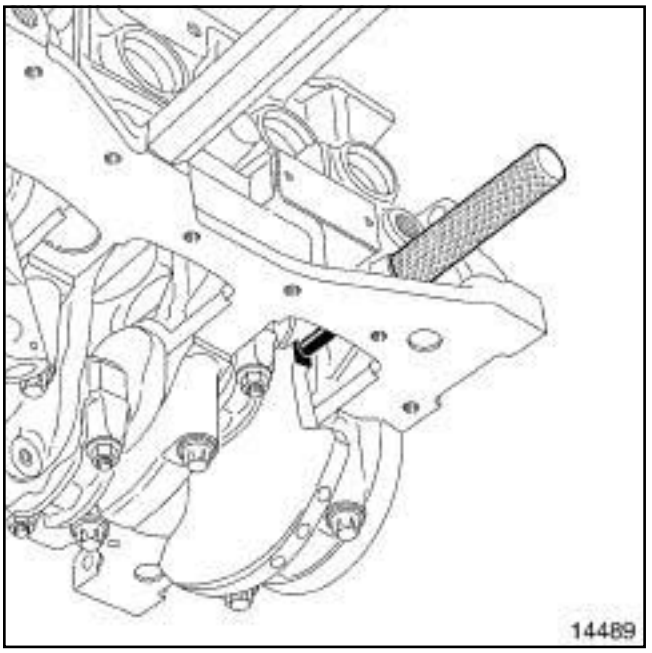

14489

❑ Turn the crankshaft in its operating direction (clockwise at timing end), until the crankshaft comes into contact with the tool **(Mot. 1489)**.

B84 or C84 or G84 or S84, and K4M, and 680 or 762 or 764 or 768 or 788 or 856 – B84 or C84 or G84 or K84 or L84 or S84, and K4J

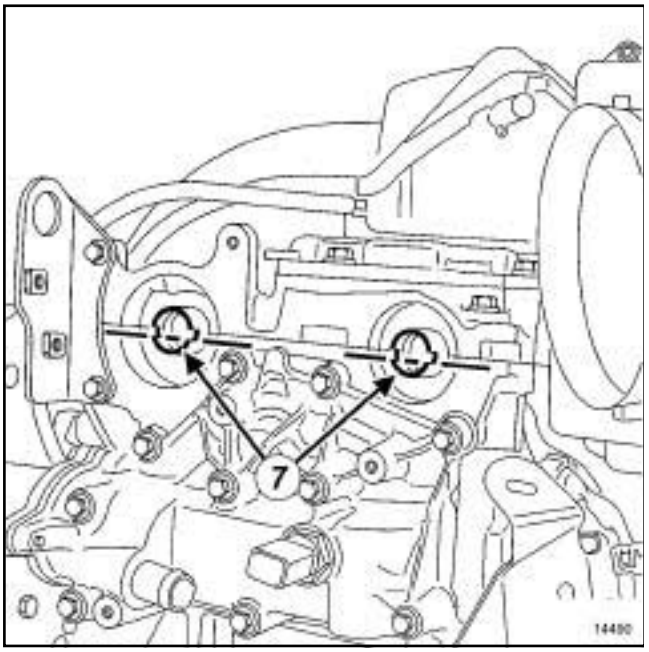

14490

❑ The camshaft grooves (**7**) must be horizontal and offset downwards.

❑ Remove the tool **(Mot. 1489)** from the cylinder block.

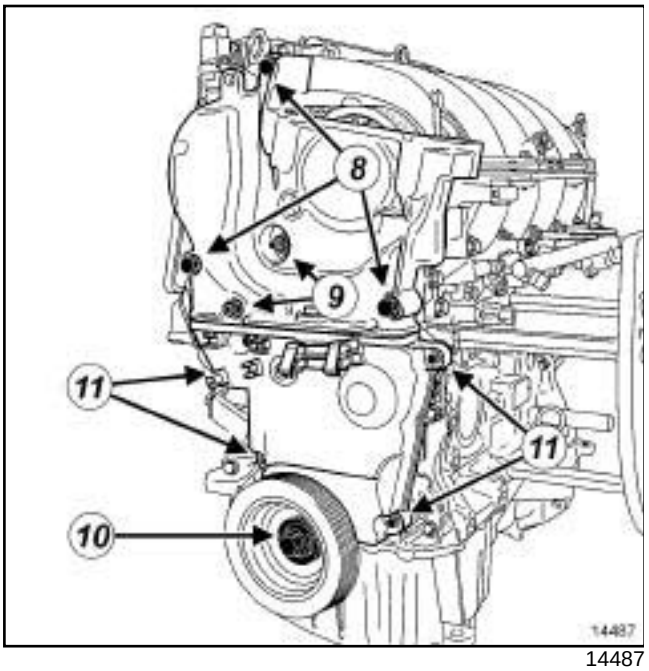

14487

❑ Remove:

- the bolts (**8**) from the upper timing cover,
- the upper timing cover nuts (**9**) ,
- the upper timing cover,
- the crankshaft accessories pulley bolt (**10**) ,
- the crankshaft accessories pulley,
- the bolts (**11**) on the lower timing cover,
- the lower timing cover.

II - OPERATION FOR REMOVAL OF PART CONCERNED

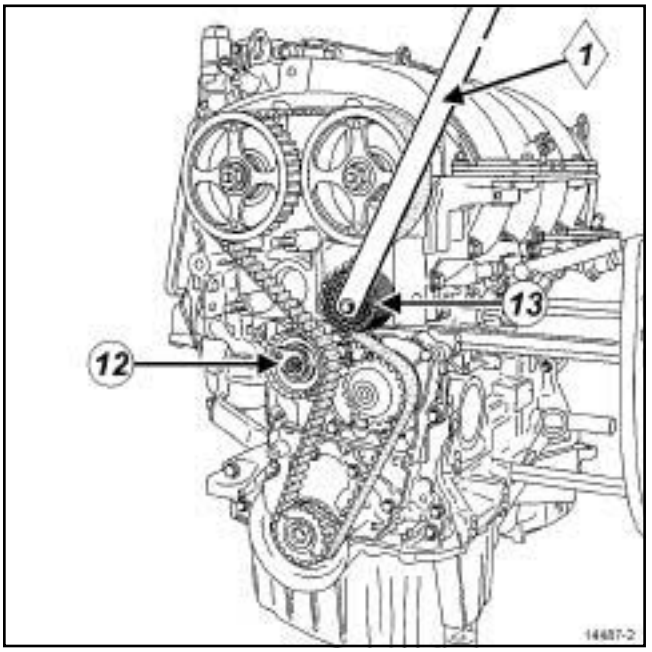

14487-2

❑ Undo the timing tension wheel nut (**12**) .

> Note:
>
> Do not drop the crankshaft timing sprocket when removing the timing belt.

❑ Remove:

- the bolt of the timing fixed roller (**13**) using the tool **(Mot. 1368)** (**1**) ,
- the timing fixed roller,
- the timing belt,
- the timing tensioning roller nut,
- the timing tensioning roller,
- the crankshaft timing sprocket.

B84 or C84 or G84 or S84, and K4M, and 680 or 762 or 764 or 768 or 788 or 856 – B84 or C84 or G84 or K84 or L84 or S84, and K4J

REFITTING - PROCEDURE 1

I - REFITTING PREPARATION OPERATION

❑ **parts always to be replaced: Timing belt (10,02, 04,02)**,

parts always to be replaced: Timing belt tensioning roller (10,02,04,04),

parts always to be replaced: Timing fixed roller (10,02,04,05),

parts always to be replaced: Crankshaft accessories pulley bolts (10,03,03,10),

parts always to be replaced: Inlet camshaft cap (10,02,02,11),

parts always to be replaced: Exhaust camshaft cap (10,02,02,12).

II - REFITTING OPERATION FOR PART CONCERNED

❑ The first procedure is used when replacing any timing component which has a crankshaft timing sprocket without a collet and which does not require one or more camshaft sprockets to be loosened.

1 - Adjusting the timing

❑

WARNING

Be sure to degrease:

- the end of the crankshaft (timing end),
- the timing sprocket pressure faces and bore of the crankshaft,
- the crankshaft accessories pulley bearing faces,
- the camshaft ends (timing end),
- the camshaft sprocket bores and bearing faces.

This is to avoid timing slippage.

This slippage leads to engine damage.

❑ Set the camshaft grooves horizontally and below the centre line by turning the camshafts with the **(Mot. 799-01)** if necessary.

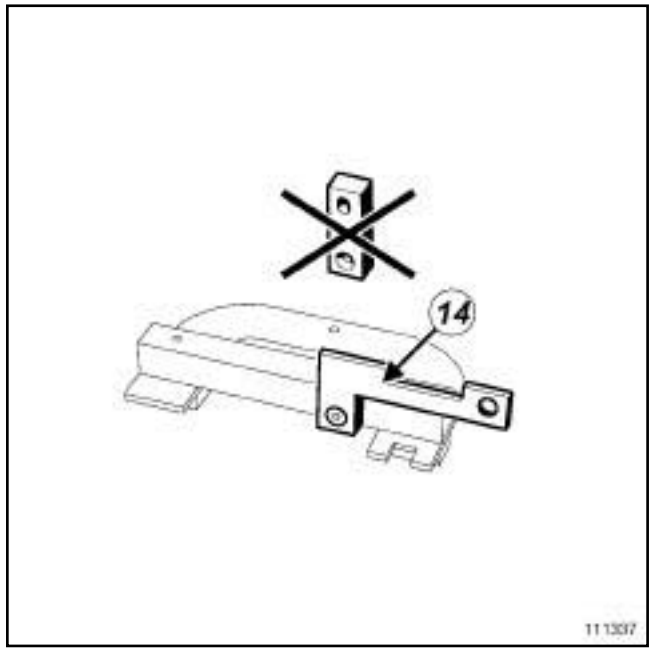

111337

❑ Fit the **(Mot. 1496)** with the **(Mot. 1750)** (**14**) .

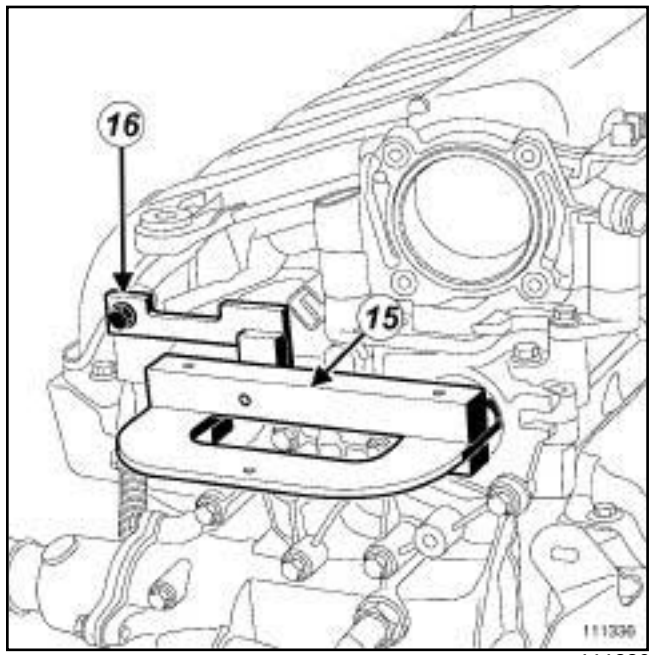

111336

❑ Fit:

- the **(Mot. 1496)** (**15**) fitted with the **(Mot. 1750)** on the end of the camshaft,
- a lifting eye bolt (**16**) to secure the tool **(Mot. 1496)** equipped with the tool **(Mot. 1750)**.

B84 or C84 or G84 or S84, and K4M, and 680 or 762 or 764 or 768 or 788 or 856 – B84 or C84 or G84 or K84 or L84 or S84, and K4J

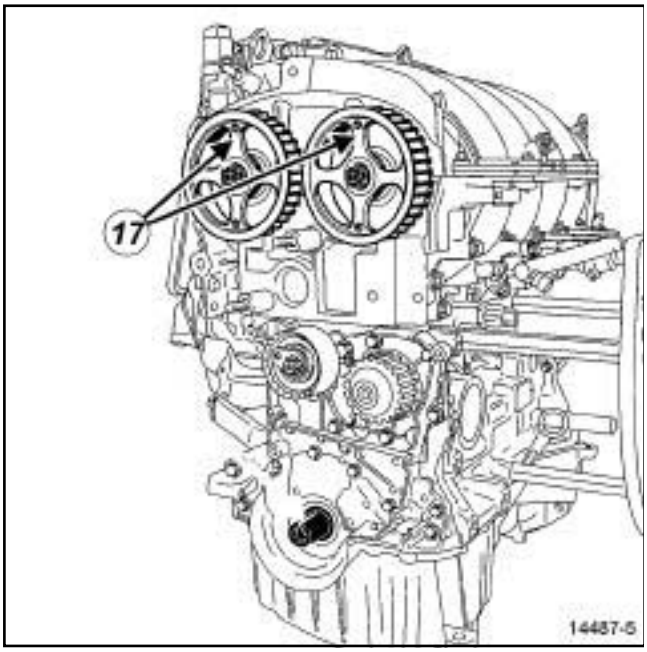

14487-5

❑ Position the RENAULT badge (**17**) etched on the stem of each camshaft sprocket vertically and pointing upwards.

2 - Refitting

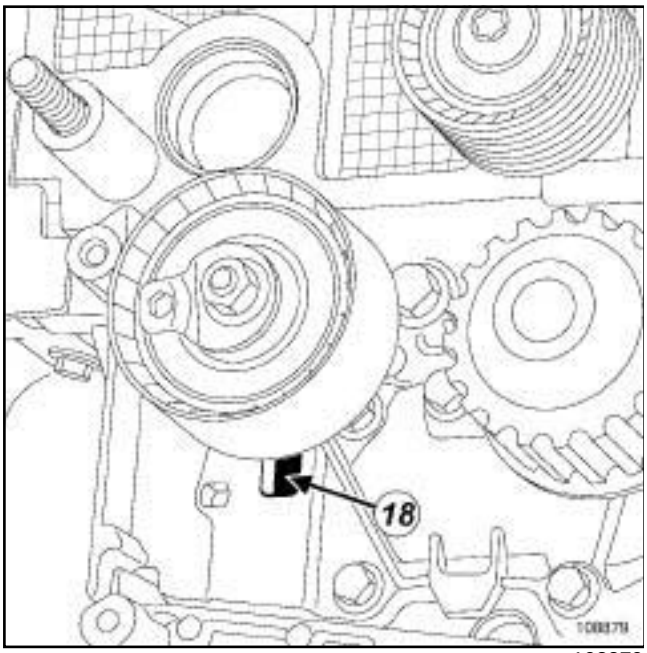

108879

❑ Refit a new timing tensioning roller by positioning the lug of the timing tensioning roller in the groove (**18**) .

❑ Fit the timing tensioning roller nut without tightening it.

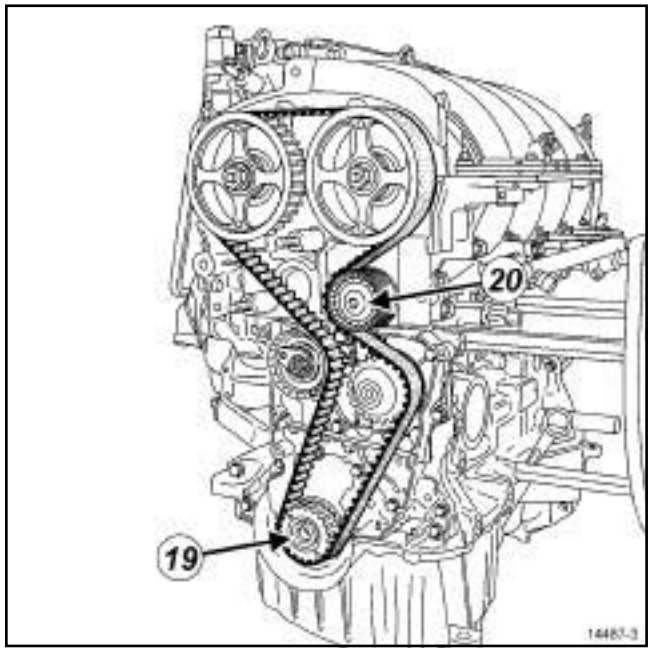

14487-3

❑ Refit:

- the crankshaft timing sprocket (**19**) ,
- a new timing belt,
- a new timing fixed roller (**20**) .

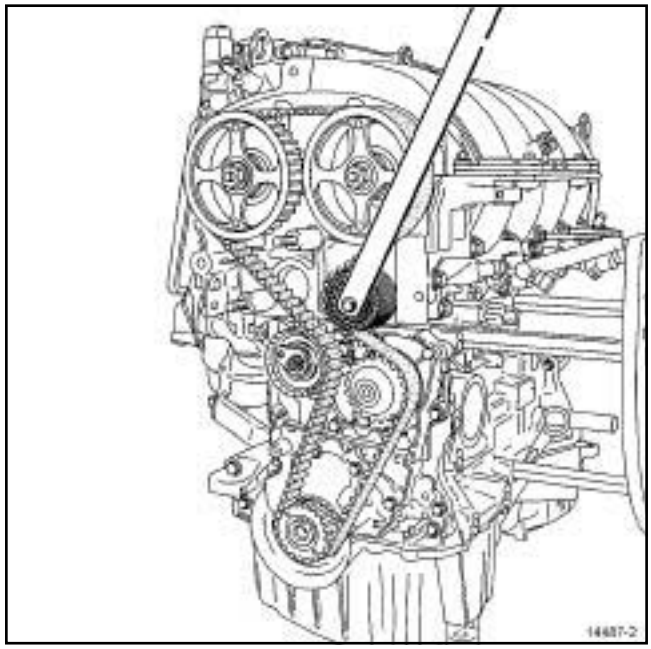
14487-2

❑ Torque tighten the **timing fixed roller bolt (50 N.m)** using the tool **(Mot. 1368)**.

B84 or C84 or G84 or S84, and K4M, and 680 or 762 or 764 or 768 or 788 or 856 – B84 or C84 or G84 or K84 or L84 or S84, and K4J

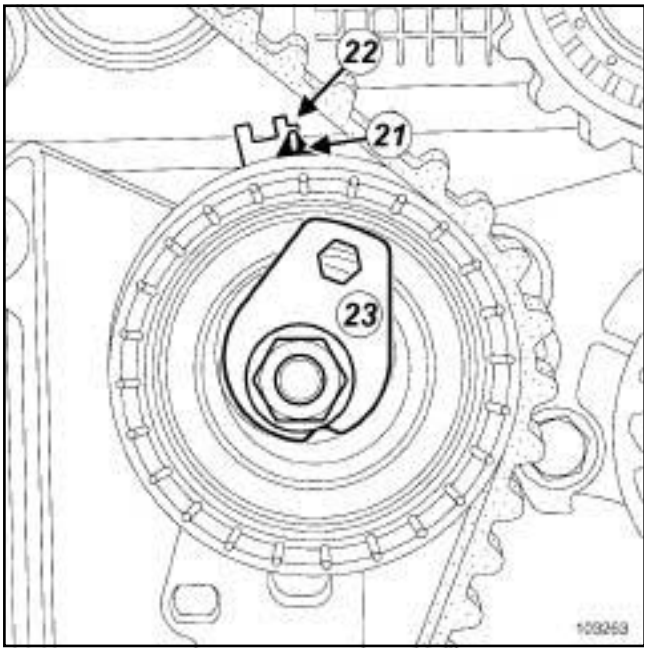

103263

- ❑ Position the adjustable index (**21**) opposite the mark (**22**) , by turning the eccentric (**23**) clockwise using a **6 mm** Allen key.
- ❑ Torque tighten the **timing tensioning roller nut (7 N.m)**.
- ❑ Refit the tool **(Mot. 1489)** on the cylinder block.

Note:

There are two types of lower timing cover:

- without a timing flap,
- with a timing flap.

a - Lower timing cover with a timing flap

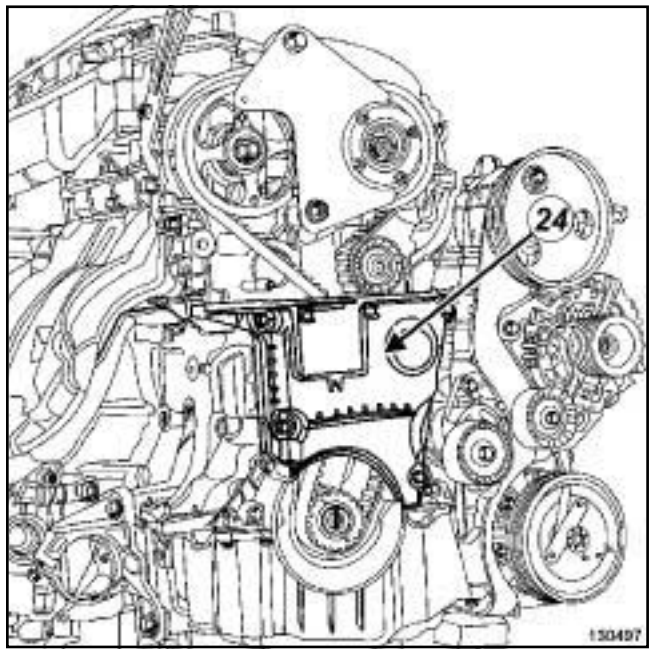

130497

- ❑ Refit the lower timing cover (**24**) .
- ❑ Tighten to torque the **lower timing cover bolts (12 N.m)**.

b - continuation of the refitting procedure regardless of the type of lower timing cover

- ❑ Refit a new crankshaft accessories pulley.

B84 or C84 or G84 or S84, and K4M, and 680 or 762 or 764 or 768 or 788 or 856 – B84 or C84 or G84 or K84 or L84 or S84, and K4J

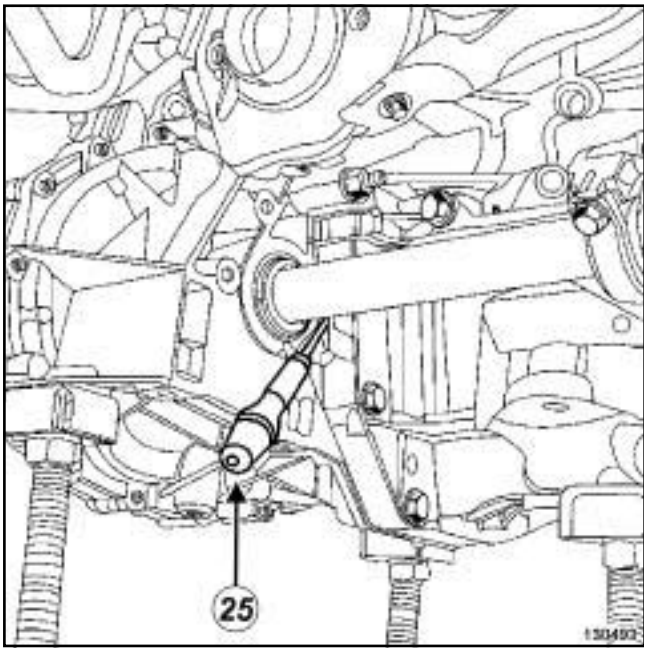

130493

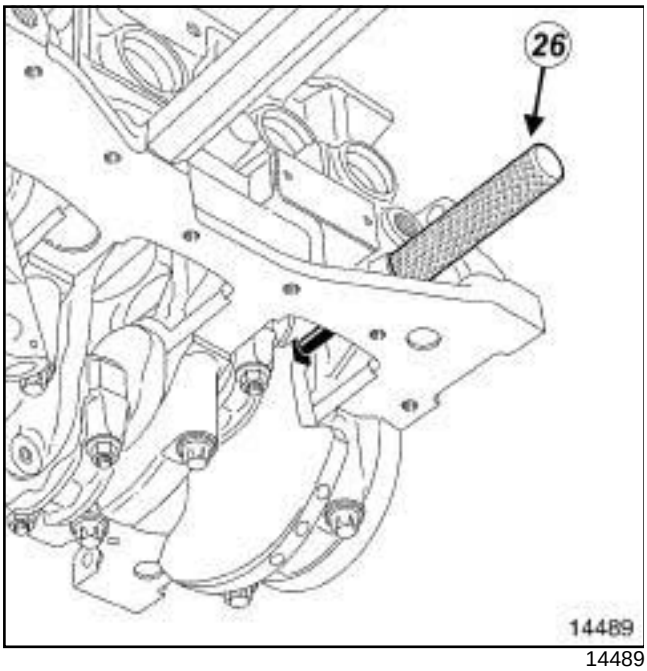

14489

❑ Use a screwdriver (**25**) to check that the flywheel does not turn (clockwise at the timing end), otherwise bring the crankshaft back into contact with the tool **(Mot. 1489)** (**26**) using the screwdriver; the crankshaft groove should be at the top.

❑ Torque and angle tighten a **new crankshaft accessories pulley bolt (40 N.m + 145° ± 15°)** (crankshaft in contact with the tool **(Mot. 1489)**).

c - Lower timing cover with a timing flap

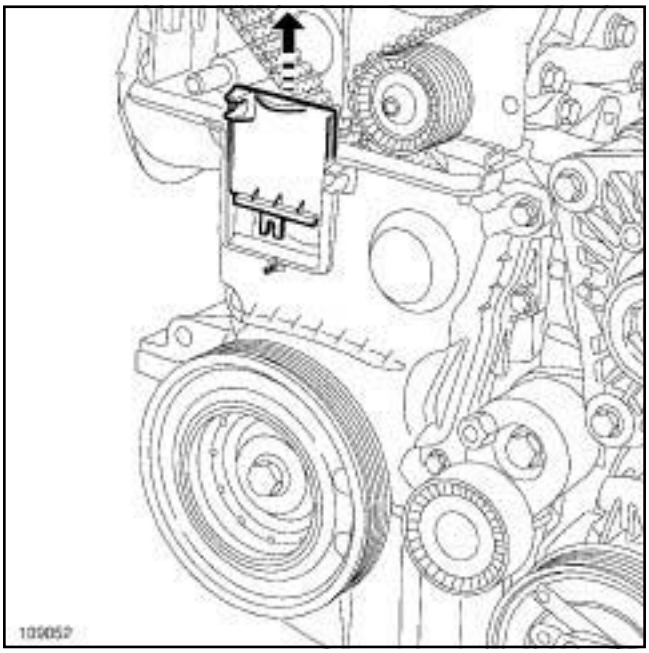
109052

❑ Remove the timing flap from the lower timing cover.

d - continuation of the refitting procedure regardless of the type of lower timing cover

❑ Remove:

- the lifting eye bolt from the **(Mot. 1496)**,
- the timing tool **(Mot. 1496)** fitted with the **(Mot. 1750)**,
- the tool **(Mot. 1489)** from the cylinder block.

3 - Checking the tension

❑ Rotate the crankshaft twice clockwise at the timing end and before aligning the marks made previously by the operator (on the camshaft dephaser), screw the tool **(Mot. 1489)** into the cylinder block.

❑ Move the crankshaft slowly and smoothly until it comes into contact with the tool **(Mot. 1489)**.

❑ Remove the tool **(Mot. 1489)** from the cylinder block.

B84 or C84 or G84 or S84, and K4M, and 680 or 762 or 764 or 768 or 788 or 856 – B84 or C84 or G84 or K84 or L84 or S84, and K4J

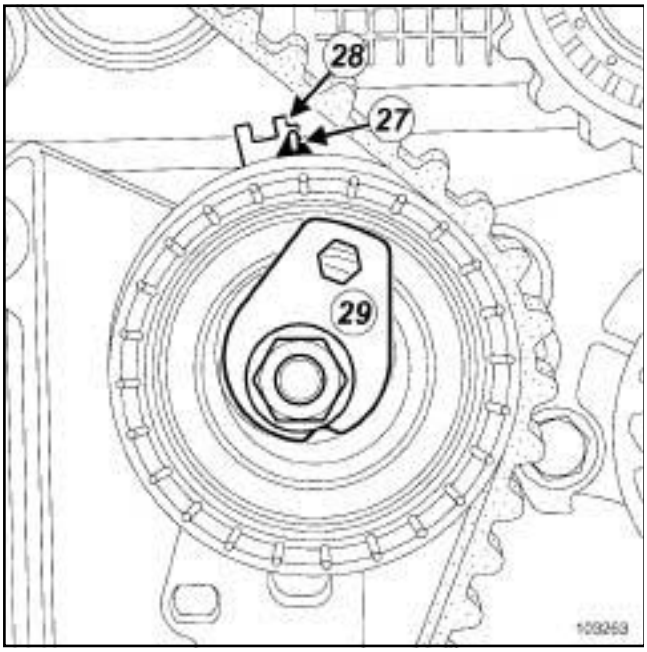

103263

- ❑ Check that the adjustable index (**27**) is opposite the notch (**28**) , if this is not the case:
  - loosen the timing tensioning roller nut by up to one turn while holding the eccentric with a **6 mm** Allen key,
  - gradually move the adjustable index marker (**27**) opposite the mark (**28**) turning the eccentric cam (**29**) clockwise.
- ❑ Torque tighten the **timing tension wheel nut (27 N.m)**.

4 - Checking the timing

- ❑ Ensure that the index and the notch on the timing tensioning roller are in the correct position before checking the timing.
- ❑ Screw tool **(Mot. 1489)** into the cylinder block.
- ❑ Move the crankshaft slowly and smoothly until it comes into contact with the tool **(Mot. 1489)**.

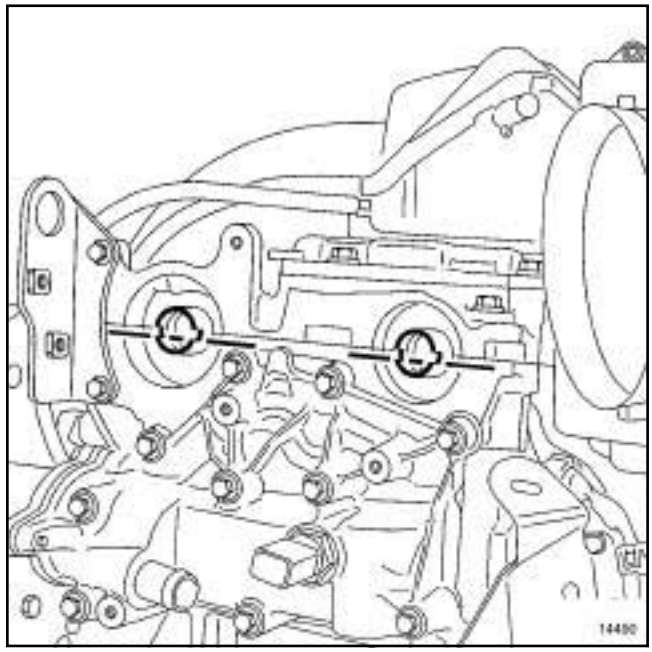

14490

- ❑ Position (without forcing) the camshaft setting tool **(Mot. 1496)** fitted with the **(Mot. 1750)** (the camshaft end grooves must be horizontal and offset towards the bottom).

> Note:
>
> The timing adjustment and tensioning operation must be repeated if the camshaft setting tool does not engage.

- ❑ Remove:
  - the timing tool **(Mot. 1496)** fitted with the **(Mot. 1750)**,
  - the tool **(Mot. 1489)** from the cylinder block.

B84 or C84 or G84 or S84, and K4M, and 680 or 762 or 764 or 768 or 788 or 856 – B84 or C84 or G84 or K84 or L84 or S84, and K4J

a - Lower timing cover with a timing flap

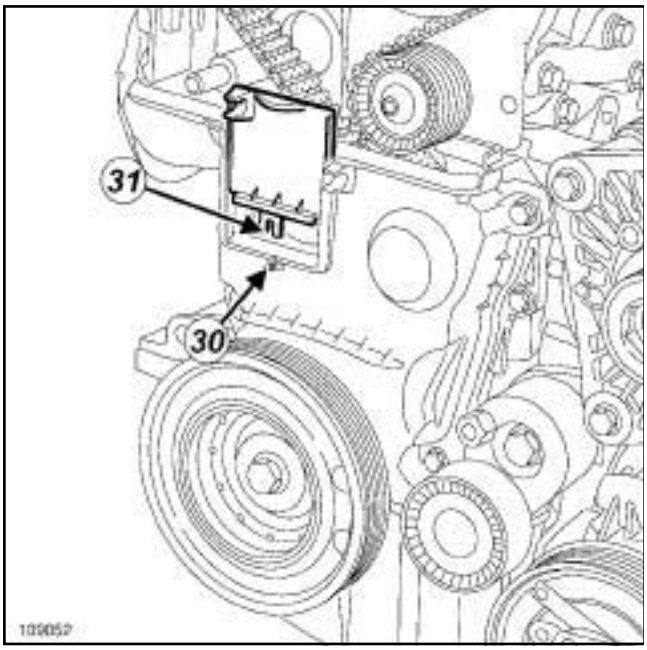

109052

❑ Refit the lower timing cover flap, checking that the locating pin (**30**) fits properly in the notch (**31**) .

b - Lower timing cover without a timing flap

❑ Refit the lower timing cover.

❑ Tighten to torque the **lower timing cover bolts (12 N.m)**.

REFITTING -PROCEDURE 2

I - REFITTING PREPARATION OPERATION

❑ **parts always to be replaced: Timing belt (10,02, 04,02)**,

parts always to be replaced: Timing belt tensioning roller (10,02,04,04),

parts always to be replaced: Timing fixed roller (10,02,04,05),

parts always to be replaced: Crankshaft accessories pulley (10,03,03,07),

parts always to be replaced: Crankshaft accessories pulley bolts (10,03,03,10),

parts always to be replaced: camshaft timing sprocket nut (10,02,02,18),

parts always to be replaced: Inlet camshaft cap (10,02,02,11),

parts always to be replaced: Exhaust camshaft cap (10,02,02,12).

II - REFITTING OPERATION FOR PART CONCERNED

❑ The second procedure is used when replacing any timing face component which has a crankshaft timing sprocket with or without a collet, that requires one or more camshaft sprockets to be loosened.

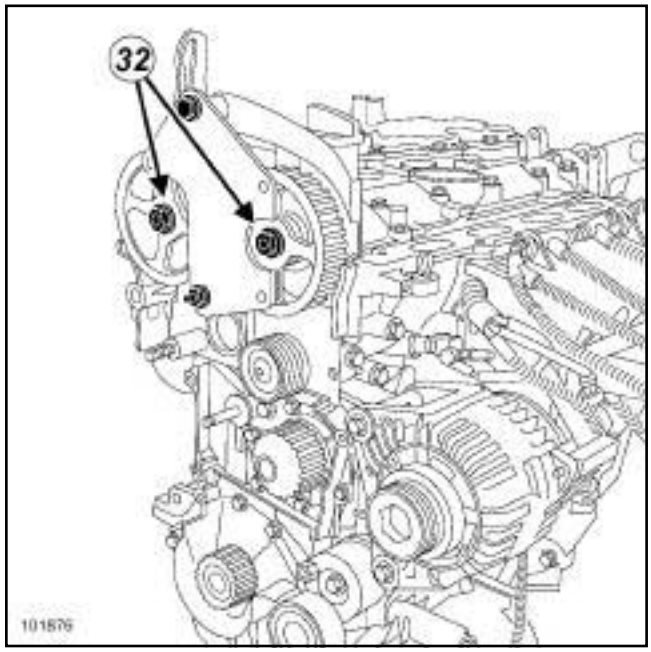

101876

❑ Fit the tool **(Mot. 1490-01)** on the camshaft sprockets using the tool **(Mot. 799-01)**.

❑ Loosen the nuts (**32**) of each camshaft sprocket.

❑ Remove:

- the tool **(Mot. 1490-01)** from the cylinder block,
- every camshaft sprocket nut,
- the camshaft sprockets.

B84 or C84 or G84 or S84, and K4M, and 680 or 762 or 764 or 768 or 788 or 856 – B84 or C84 or G84 or K84 or L84 or S84, and K4J

1 - Adjusting the timing

❑

Note:

If the stud loosens with the nut (see **11A**, **Top and front of engine**, **Camshaft: Removal - Refitting**, page **11A-172**) (Technical Note 3887A,11A, Top and front of engine).

WARNING

Always degrease:

- the end of the crankshaft (timing end),
- the timing sprocket pressure faces and bore of the crankshaft,
- the crankshaft accessories pulley bearing faces,
- the camshaft ends (timing end),
- the camshaft sprocket bores and bearing faces.

This is to avoid timing slippage.

This slippage leads to engine damage.

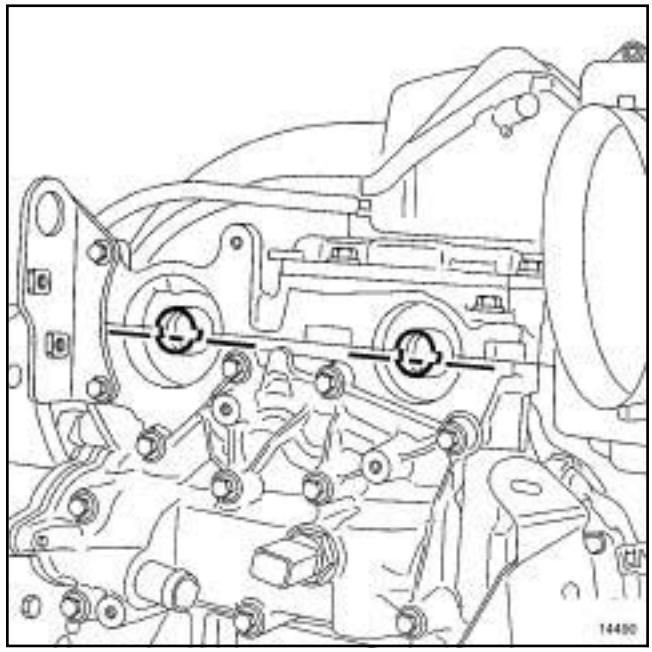

14490

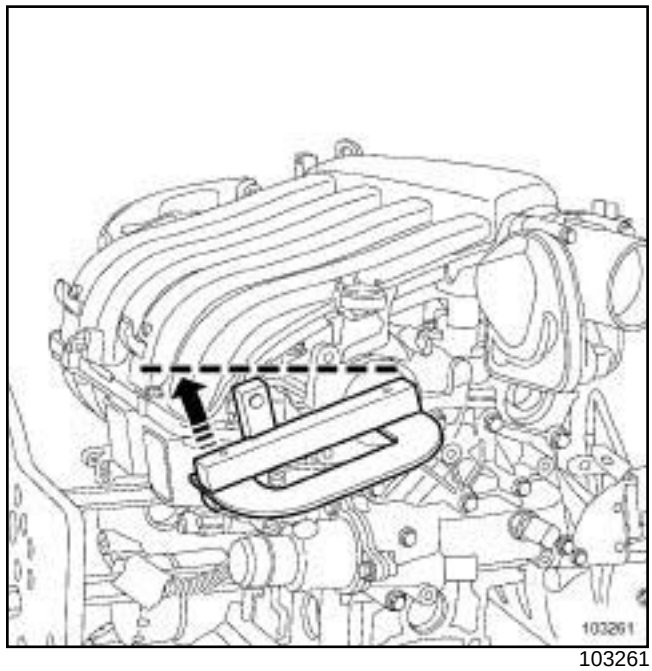

103261

❑ Position the camshaft grooves horizontally and below the centre line, by turning the camshafts with the **(Mot. 1496)** if necessary.

B84 or C84 or G84 or S84, and K4M, and 680 or 762 or 764 or 768 or 788 or 856 – B84 or C84 or G84 or K84 or L84 or S84, and K4J

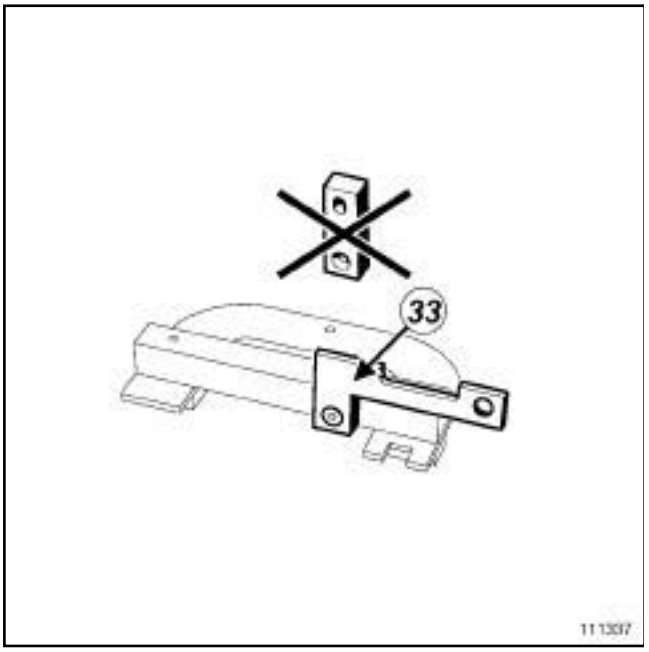

111337

❑ Fit the **(Mot. 1496)** with the **(Mot. 1750)** (**33**) .

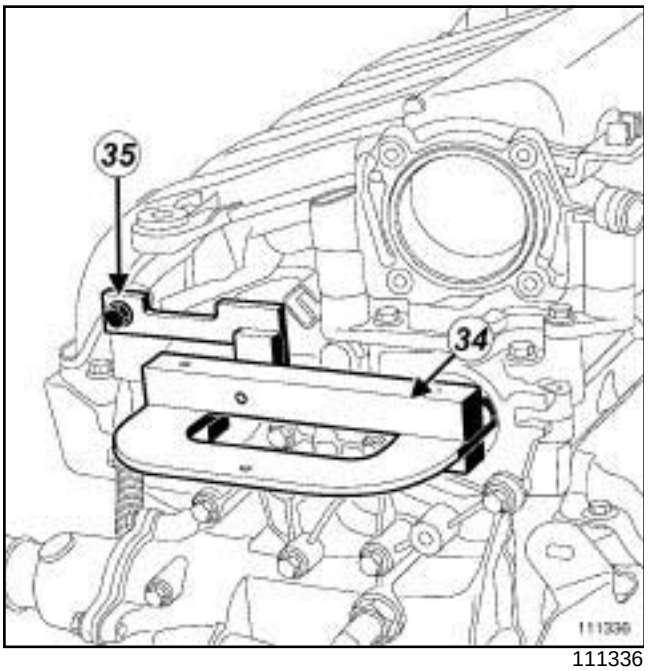

111336

❑ Fit:

- the **(Mot. 1496)** (**34**) fitted with the **(Mot. 1750)** on the end of the camshaft,
- a lifting eye bolt (**35**) to secure the tool **(Mot. 1496)** equipped with the tool **(Mot. 1750)**.

❑ Refit:

- the crankshaft timing sprocket,
- the camshaft sprockets,
- every camshaft sprocket nut.

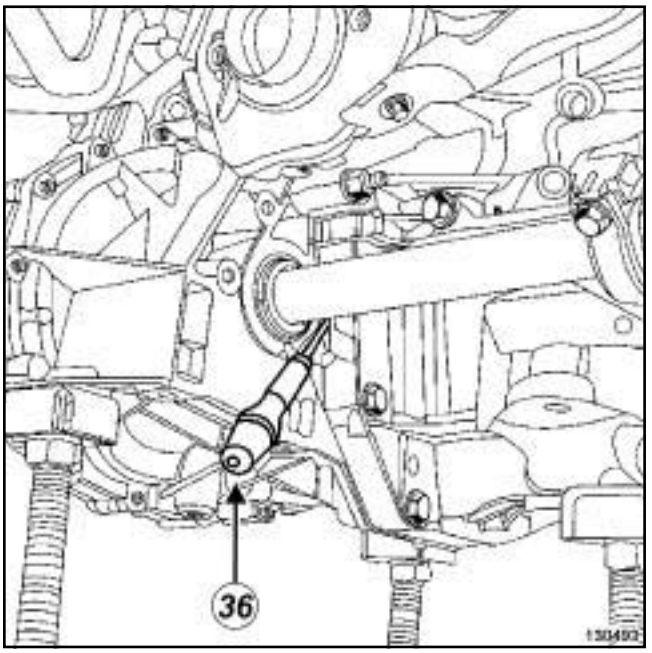

130493

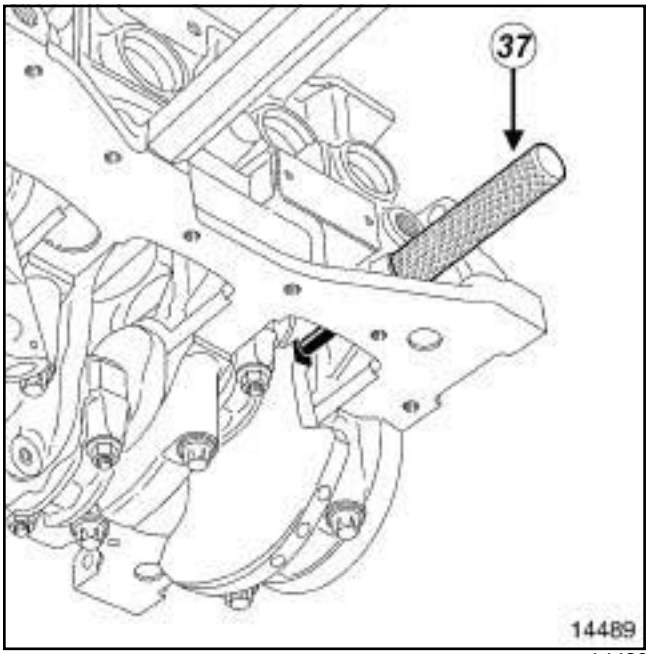

14489

❑ Refit the tool **(Mot. 1489)** on the cylinder block.

❑ Use a screwdriver (**36**) to check that the flywheel does not turn (clockwise at the timing end), otherwise bring the crankshaft back into contact with the tool **(Mot. 1489)** (**37**) using the screwdriver; the crankshaft groove should be at the top.

B84 or C84 or G84 or S84, and K4M, and 680 or 762 or 764 or 768 or 788 or 856 – B84 or C84 or G84 or K84 or L84 or S84, and K4J

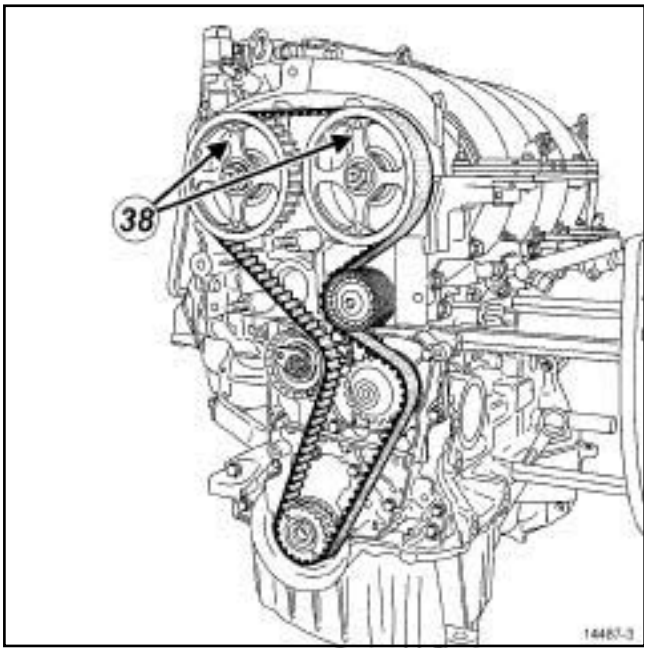

14487-3

- Position the RENAULT badge (**38**) etched on the stem of each camshaft sprocket vertically and pointing upwards.

2 - Refitting

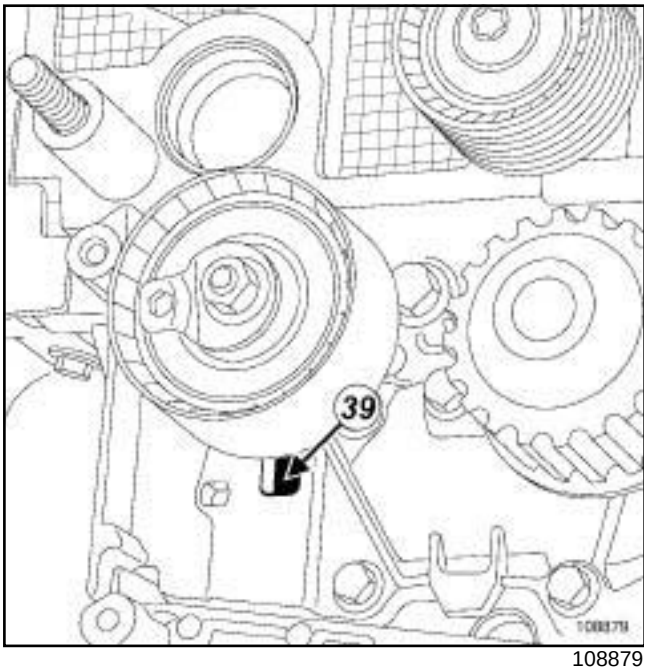

108879

- Refit a new timing tensioning roller by positioning the lug of the timing tensioning roller in the groove (**39**) .
- Fit the timing tensioning roller nut without tightening it.

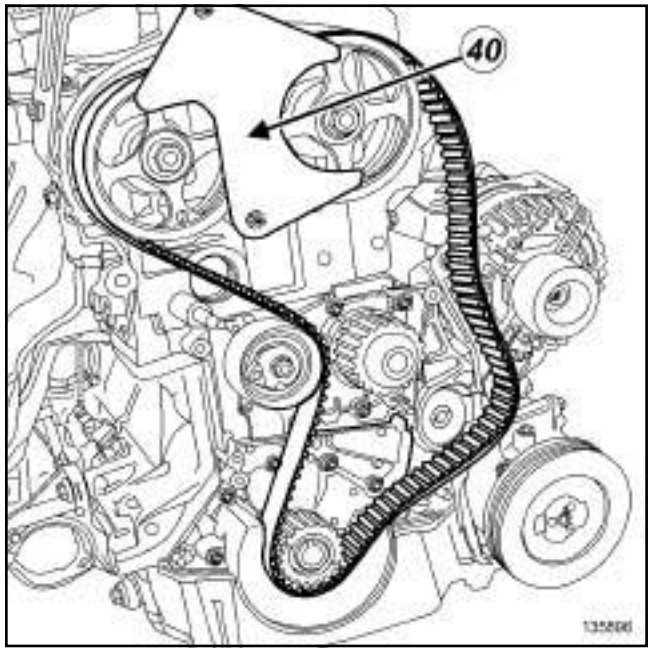

135896

- Refit a new timing belt starting with the sprocket of each camshaft (without moving the sprocket of each camshaft).
- Fit the tool **(Mot. 1490-01)** (**40**) on the camshaft sprockets (use the bolt and nut of the upper timing cover to fit the tool **(Mot. 1490-01)**).

Note:

Take care to properly tighten the timing belt between the two camshaft sprockets.

Note:

If the engine is equipped with a crankshaft timing sprocket with a collet, take care to properly tighten the timing belt between the exhaust camshaft sprocket and the crankshaft timing sprocket.

B84 or C84 or G84 or S84, and K4M, and 680 or 762 or 764 or 768 or 788 or 856 – B84 or C84 or G84 or K84 or L84 or S84, and K4J

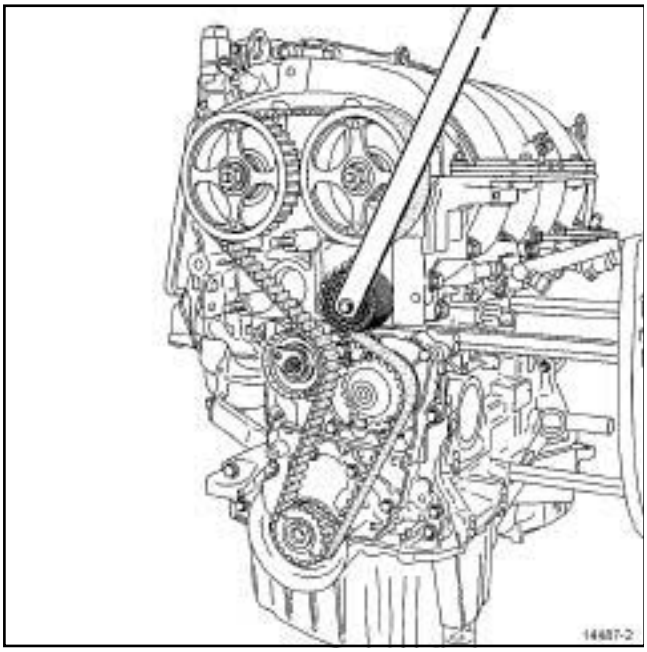

14487-2

❑ Refit a new timing fixed roller.

❑ Torque tighten the **timing fixed roller bolt (50 N.m)** using the tool **(Mot. 1368)**.

3 - Timing belt tension

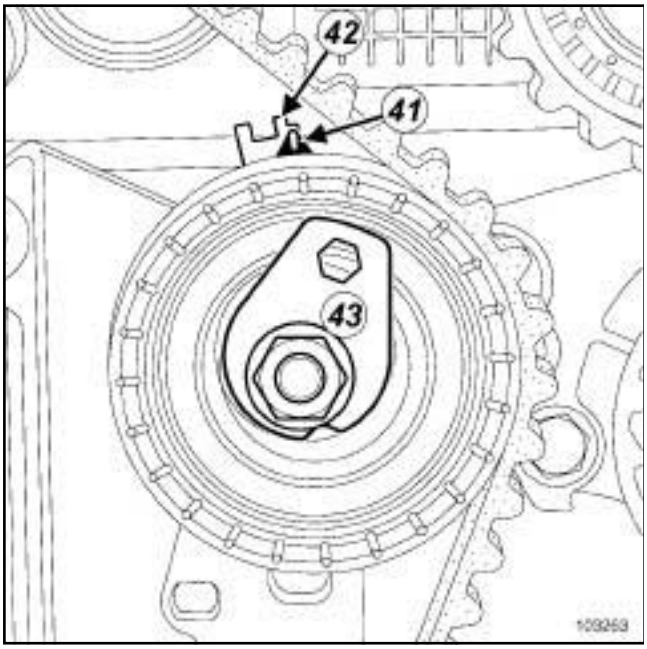

103263

❑ Position the adjustable index (**41**) opposite the mark (**42**) , by turning the eccentric (**43**) clockwise using an Allen key.

❑ Torque tighten the **timing tensioning roller nut (7 N.m)**.

> Note:
>
> There are two types of lower timing cover:
>
> - without a timing flap,
>
> - with a timing flap.

a - Lower timing cover with a timing flap

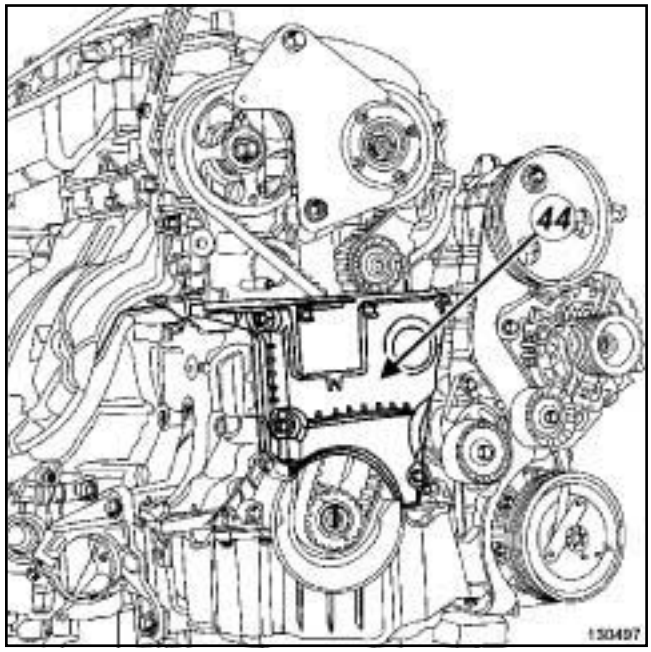

130497

❑ Refit the lower timing cover (**44**) .

❑ Tighten to torque the **lower timing cover bolts (12 N.m)**.

b - continuation of the refitting procedure regardless of the type of lower timing cover

❑ Refit a new crankshaft accessories pulley.

❑ Torque and angle tighten:

- a **crankshaft accessories pulley bolt (40 N.m + 145° ± 15°)**,
- the **nut of each camshaft sprocket (30 N.m + 84° ± 4°)**.

B84 or C84 or G84 or S84, and K4M, and 680 or 762 or 764 or 768 or 788 or 856 – B84 or C84 or G84 or K84 or L84 or S84, and K4J

c - Lower timing cover with a timing flap

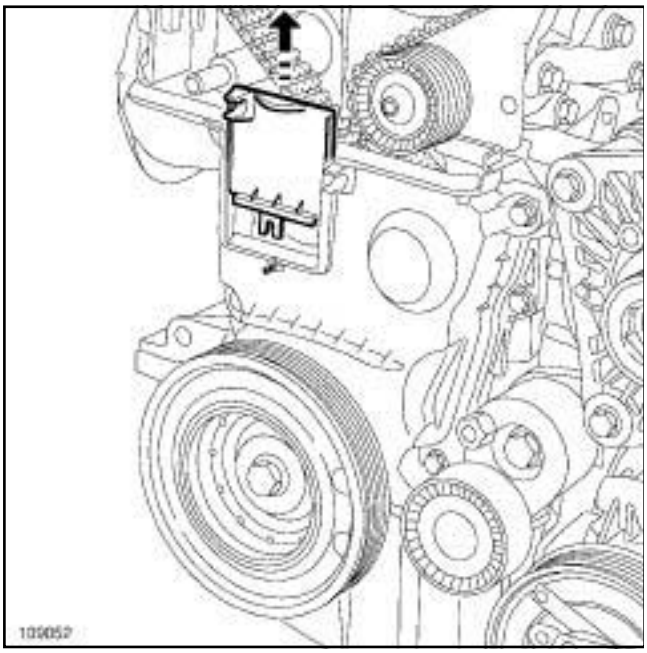

109052

❑ Remove the timing flap from the lower timing cover.

d - continuation of the refitting procedure regardless of the type of lower timing cover

❑ Remove:

- the lifting eye bolt from the **(Mot. 1496)**,
- the **(Mot. 1496)** fitted with the **(Mot. 1750)**,
- the tool **(Mot. 1489)** from the cylinder block,
- the **(Mot. 1490-01)**.

4 - Checking the tension

❑ Rotate the crankshaft twice clockwise at the timing end and before aligning the marks made previously by the operator (on the camshaft dephaser), screw the tool **(Mot. 1489)** into the cylinder block.

❑ Move the crankshaft slowly and smoothly until it comes into contact with the tool **(Mot. 1489)**.

❑ Remove the tool **(Mot. 1489)** from the cylinder block.

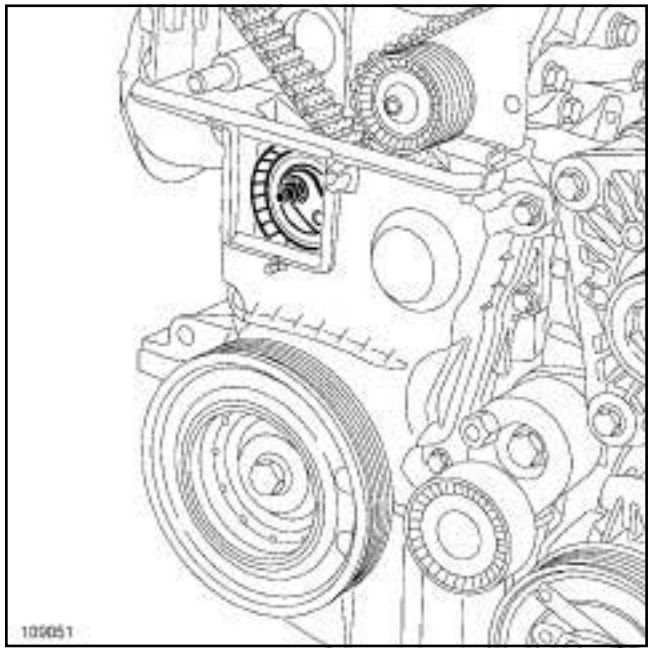

109051

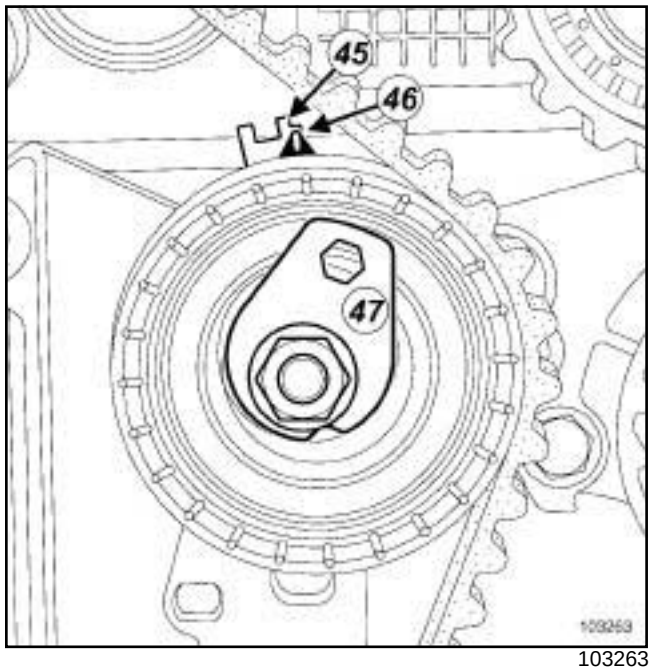

103263

❑ Check that the adjustable index (**46**) is opposite the notch (**45**) , if this is not the case:

- loosen the timing tensioning roller nut by up to one turn while holding the eccentric with an Allen key,
- gradually move the adjustable index marker (**46**) opposite the mark (**45**) turning the eccentric cam (**47**) clockwise.

❑ Torque tighten the **timing tensioning roller nut (27 N.m)**.

B84 or C84 or G84 or S84, and K4M, and 680 or 762 or 764 or 768 or 788 or 856 – B84 or C84 or G84 or K84 or L84 or S84, and K4J

5 - Checking the timing

❑ Ensure that the index and the notch on the timing tensioning roller are in the correct position before checking the timing.

❑ Screw tool **(Mot. 1489)** into the cylinder block.

❑ Move the crankshaft slowly and smoothly until it comes into contact with the tool **(Mot. 1489)**.

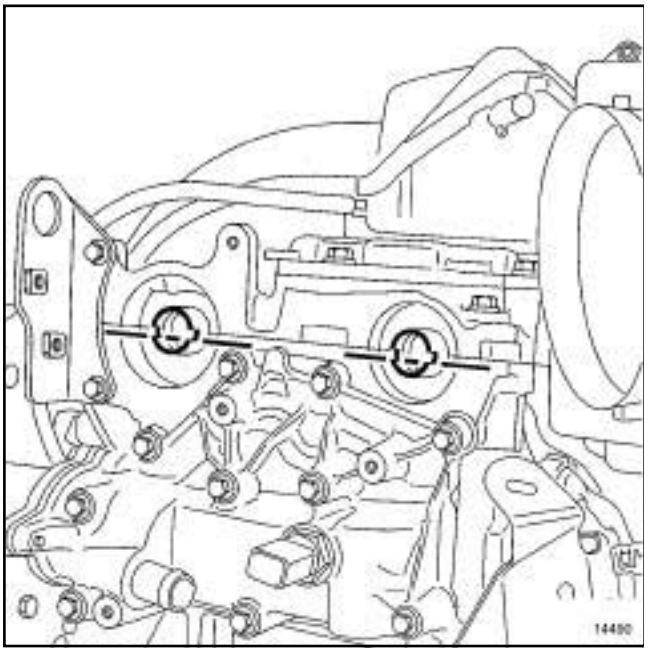

14490

❑ Position (without forcing) the tool **(Mot. 1496)** equipped with the tool **(Mot. 1750)** (the camshaft end grooves must be horizontal and offset downwards).

> Note:
>
> If the tool **(Mot. 1496)** equipped with the tool **(Mot. 1750)** cannot be engaged, readjust the timing and the tension.

❑ Remove:

- the timing tool **(Mot. 1496)** fitted with the **(Mot. 1750)**,
- the tool **(Mot. 1489)** from the cylinder block.

a - Lower timing cover with a timing flap

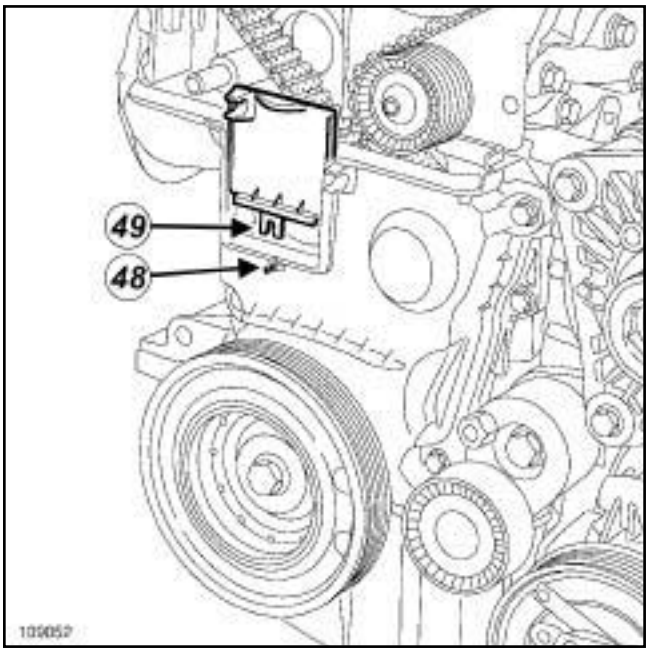

109052

❑ Refit the lower timing cover flap, checking that the locating pin (**48**) fits properly in the notch (**49**) .

b - Lower timing cover without a timing flap

❑ Refit the lower timing cover.

❑ Tighten to torque the **lower timing cover bolts (12 N.m)**.

III - FINAL OPERATION

❑ Apply a drop of **SILICONE ADHESIVE SEALANT** (see **Vehicle: Parts and ingredients for the repairwork**) (04B, Consumables - Products) to the thread of the TDC setting pin plug.

❑ Tighten to torque the **TDC pin plug (20 N.m)**.

❑ Refit the upper timing cover.

❑ Torque tighten:

- the **upper timing cover bolts (46 N.m)**,
- the **upper timing cover nuts (46 N.m)**.

❑ Refit:

- a new inlet camshaft plug using the **(Mot. 1487)**,
- a new exhaust camshaft plug using the **(Mot. 1488)**,
- the eye for lifting the engine at the flywheel end.

❑ Torque tighten the **flywheel end lifting eye bolts (10 N.m)**.

B84 or C84 or G84 or S84, and K4M, and 680 or 762 or 764 or 768 or 788 or 856 – B84 or C84 or G84 or K84 or L84 or S84, and K4J

❑ Refit:

- the air resonator,
- the accessories belt (see **11A**, **Top and front of engine**, **Accessories belt: Removal - Refitting**, page **11A-4**) ,
- the engine undertray,
- the front section of the front right-hand wheel arch liner (see **Front wheel arch liner: Removal - Refitting**) (55A, Exterior protection),
- the front right-hand wheel (see **Wheel: Removal - Refitting**) (35A, Wheels and tyres),
- the scuttle panel grille (see **Scuttle panel grille: Removal - Refitting**) (56A, Exterior equipment),
- the windscreen wiper arms (see **Windscreen wiper arm: Removal - Refitting**) (85A, Wiping - Washing).

❑ Connect the battery (see **Battery : Removal - Refitting**) (80A, Battery).

M9R

Essential special tooling	
Mot. 1431	Flywheel locking tool.
Mot. 1716	Removes housing with silicone seals.
Mot. 1766	TDC locating pin.
Mot. 1769	Camshaft timing tool

Tightening torques ▽	
timing chain guide bolts (initial torque)	**5 N.m**
timing chain guide bolts	**25 N.m**
bolt of the timing chain tensioner guide	**25 N.m**
timing hydraulic tensioner bolts	**10 N.m**
timing sprocket bolts on the exhaust side of the camshaft	**10 N.m + 40° ± 6°**
TDC setting pin hole plug	**25 N.m**
timing cover bolts (initial torque)	**5 N.m**
M6 bolts on the timing cover	**16 N.m**
M8 bolt on the timing cover	**18 N.m**
side bolts of the engine mounting on the cylinder head	**30 N.m + 54° ± 6°**
upper bolt of the engine mounting on the cylinder head	**25 N.m**
engine mounting reinforcement bolts	**25 N.m**

REMOVAL

I - REMOVAL PREPARATION OPERATION

❑

WARNING
Applying pressure to the engine oil sump is strictly forbidden. Any damage to the sump may also damage the engine.

Note:

Consult the safety and cleanliness advice and operation recommendations before carrying out any repair (see **Engine: Precautions for repair**) .

❑ Remove the engine - gearbox assembly (see **10A**, **Engine and cylinder block assembly**, **Engine/ gearbox assembly: Removal - Refitting**, page **10A-97**) .

❑ Place the engine on the component support (see **Engine support equipment: Use**) .

❑ Drain the engine (see **10A**, **Engine and cylinder block assembly**, **Engine oil: Draining - Refilling**, page **10A-43**) .

❑ Remove:

- the accessories belt (see **11A**, **Top and front of engine**, **Accessories belt: Removal - Refitting**, page **11A-4**) ,
- the coolant pump (see **19A**, **Cooling**, **Water pump: Removal - Refitting**, page **19A-29**) .

M9R

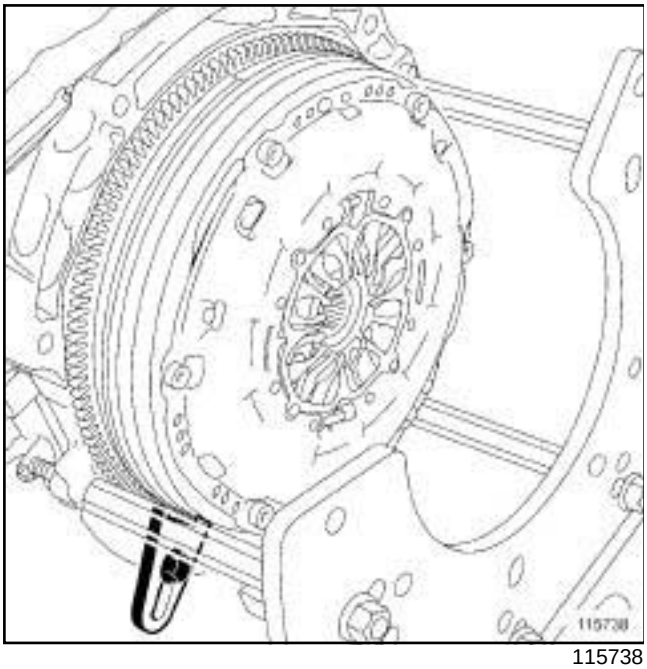

115738

❑ Fit the flywheel locking tool **(Mot. 1431)** onto the cylinder block.

❑ Remove:

- the crankshaft accessories pulley (see **11A**, **Top and front of engine**, **Crankshaft accessories pulley: Removal - Refitting**, page **11A-11**) ,
- the crankshaft seal on the timing side (see **10A**, **Engine and cylinder block assembly**, **Crankshaft seal at timing end Removal - Refitting**, page **10A-1**) .

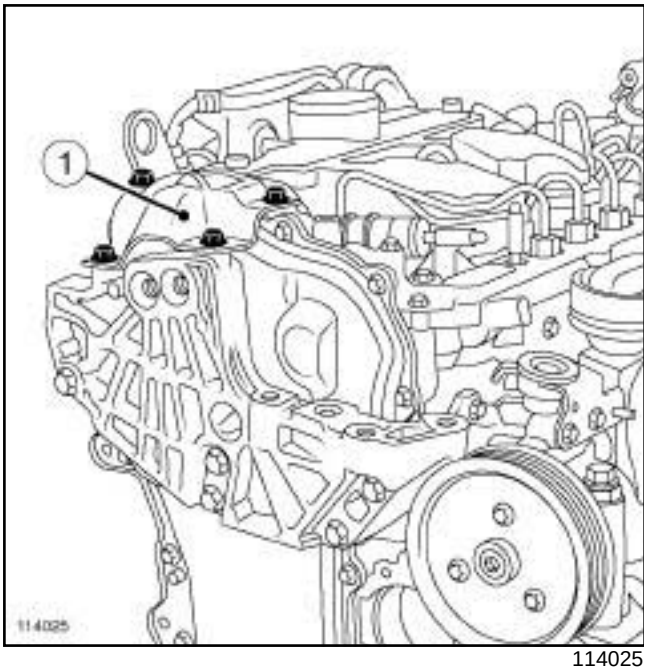

114025

❑ Remove the engine mounting reinforcement (**1**) .

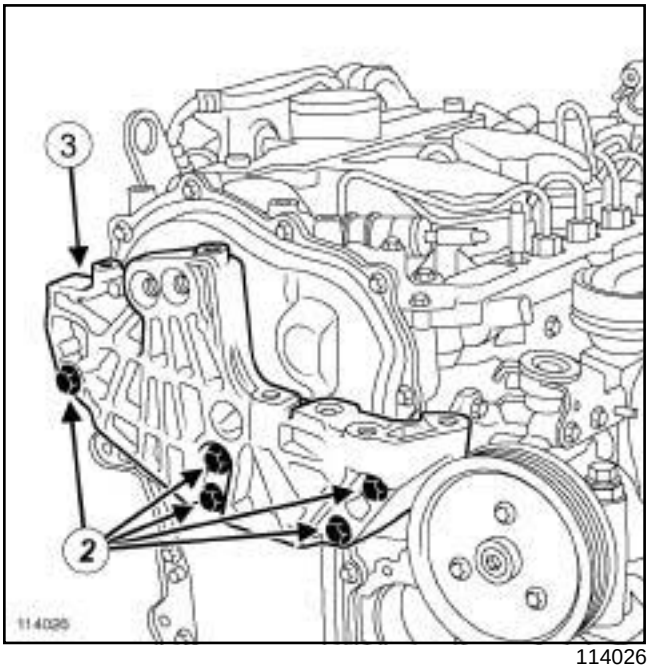

114026

❑ Remove:

- the engine mounting bolts (**2**) and (**3**) ,
- the engine mounting.

M9R

II - REMOVING THE TIMING BELT

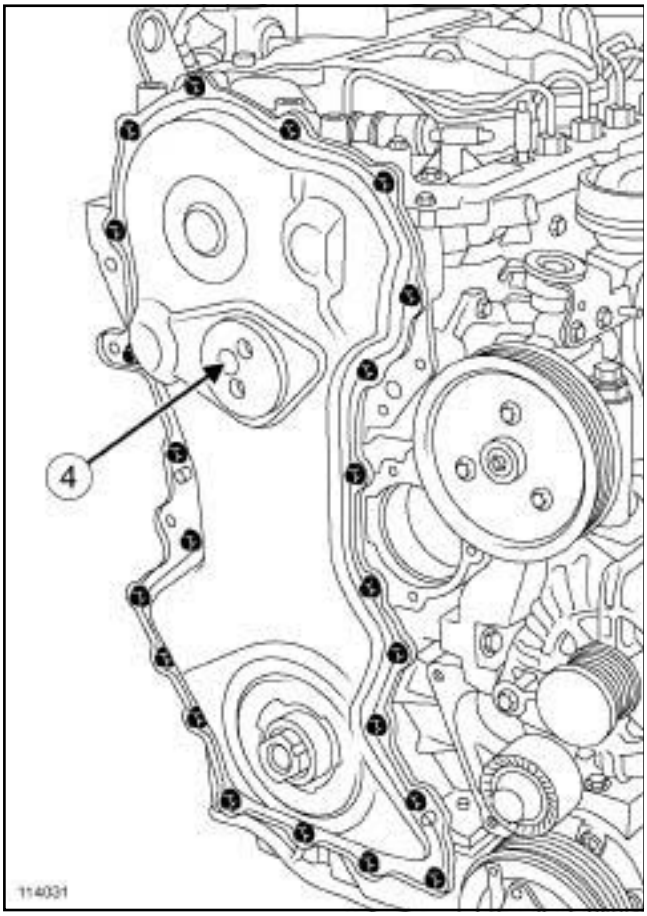

114031

- ❑ Remove the bolts from the timing cover, around the rim and in the hole (**4**) .
- ❑ Cut the silicone seal from the rim of the timing cover using the **(Mot. 1716)**.
- ❑ Remove the timing cover.

> Note:
>
> Remove the timing cover carefully by hand, with small movements, to prevent damaging it.

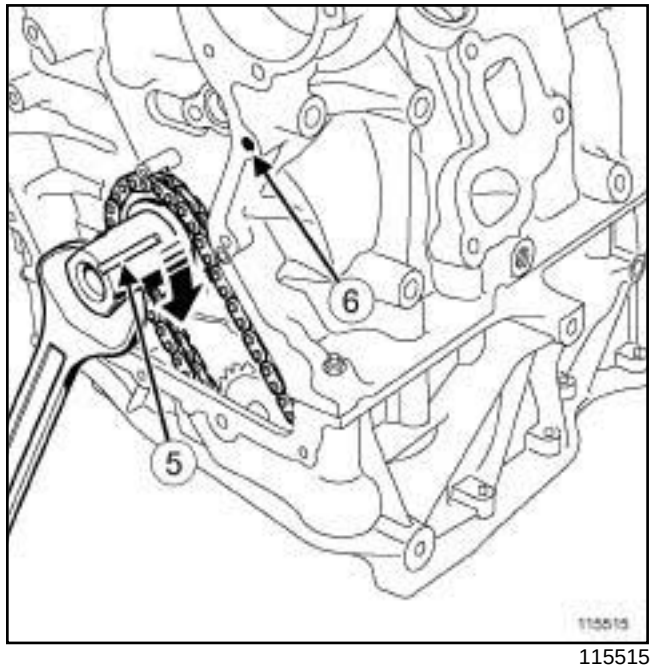

115515

- ❑ Remove the tool **(Mot. 1431)**.
- ❑ Align the groove (**5**) on the crankshaft with the hole (**6**) on the cylinder block (pistons at mid-stroke).

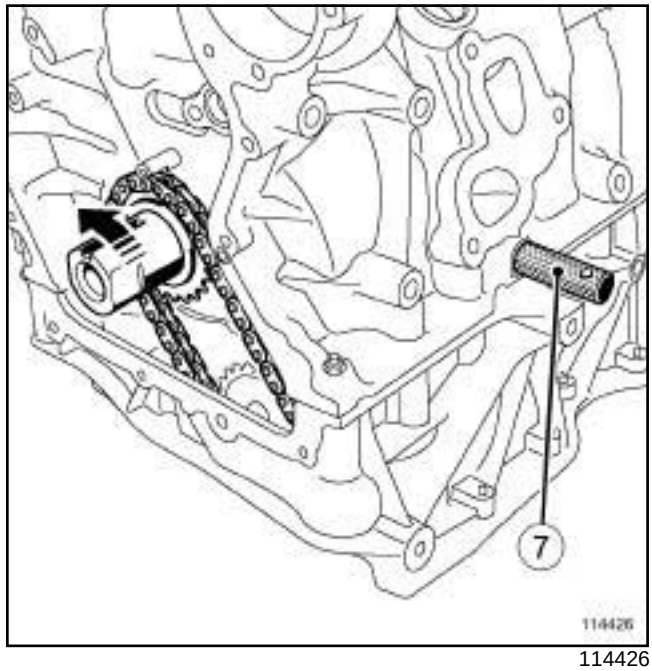

114426

- ❑ Remove the top dead centre setting plug.
- ❑ In place of the plug, manually tighten the top dead centre pin **(Mot. 1766)** (**7**) .
- ❑ Turn the crankshaft anti-clockwise until it makes contact with the pin.

M9R

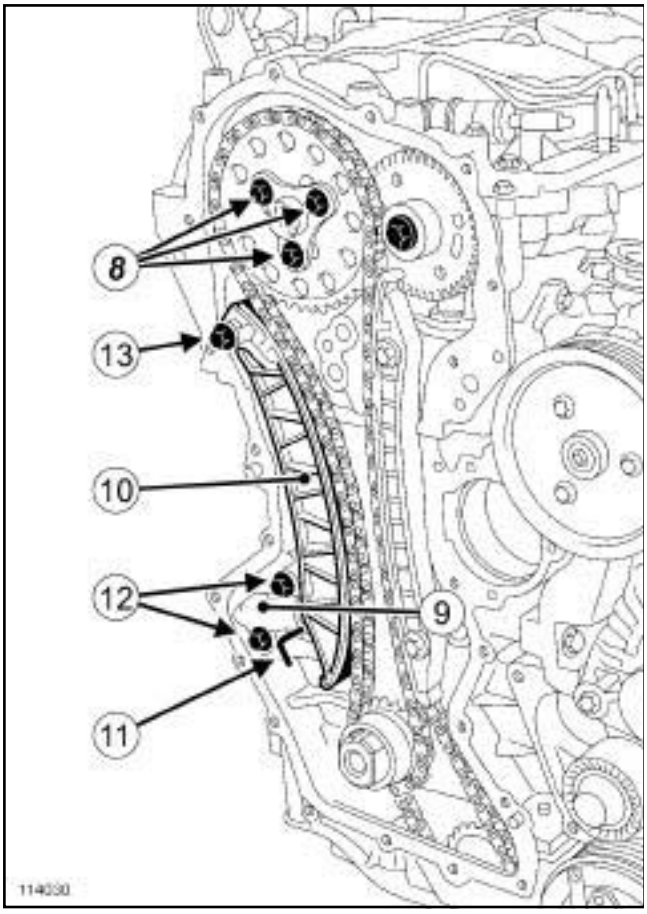

114030

- ❑ Loosen the bolts (**8**) of the timing sprocket (exhaust side).
- ❑ Compress the hydraulic tensioner piston (**9**) with the timing chain tensioner guide (**10**) .
- ❑ Lock the hydraulic tensioner piston (**9**) in the "compressed" position using a **3 mm** Allen key (**11**) .
- ❑ Remove:
  - the hydraulic tensioner bolts (**12**) ,
  - the timing hydraulic tensioner (**9**) ,
  - the chain tensioner guide bolt (**13**) ,
  - the timing chain tensioner guide (**10**) .

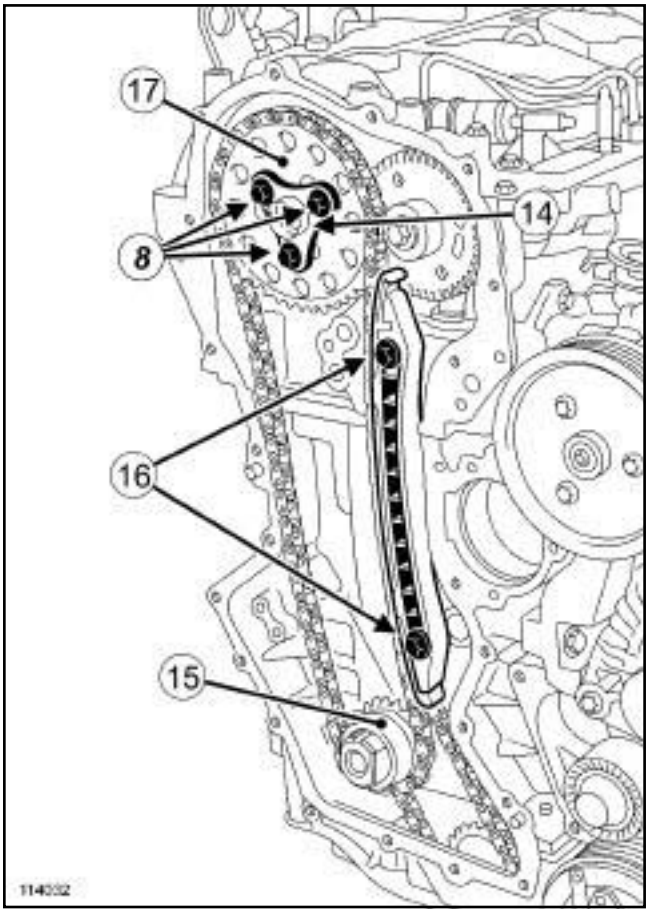

114032

- ❑ Remove:
  - the bolts (**8**) from the timing sprocket,
  - the timing sprocket washer (**14**) ,
  - the "sprocket (**17**) - timing chain - sprocket (**15**) " assembly,
  - the timing chain guide bolts (**16**) ,
  - the timing chain guide,
  - the top dead centre pin **(Mot. 1766)** (**7**) .

M9R

REFITTING

I - REFITTING PREPARATION

❑ Clean the joint faces of the timing cover using **SUPER CLEANING AGENT FOR JOINT FACES** (see **Vehicle: Parts and ingredients for the repairwork**) .

> **WARNING**
> Do not scrape the joint faces of the aluminium, any damage caused to the joint face will result in a risk of leaks.

❑ Remove the residue using a plastic spatula.

❑ Finish cleaning the joint faces using a **GREY ABRASIVE PAD**.

❑ Use **SURFACE CLEANER** (see **Vehicle: Parts and ingredients for the repairwork**) to clean:

- the joint face of the timing cover on the cylinder block and on the cylinder head,
- the timing cover.

> **WARNING**
> To ensure proper sealing, the gasket surfaces must be clean, dry and not greasy (avoid any finger marks).

> **WARNING**
> Applying excess sealant could cause it to be squeezed out when parts are tightened. A mixture of sealant and fluid could damage certain components (engine, radiator, etc.).

❑ Parts always to be replaced:

- Timing chain.
- Timing hydraulic tensioner.
- Crankshaft timing sprocket.
- Timing sprocket (driven by the chain) on the camshaft (exhaust side).
- Timing sprocket washer on the camshaft, exhaust side.
- Timing sprocket bolt on the camshaft, exhaust side.
- Timing chain guide
- Timing chain guide bolt.
- Timing chain tensioner guide.
- Timing chain tensioner guide bolt.

II - REFITTING THE TIMING CHAIN

❑ Set the engine at top dead centre.

❑ Fit the top dead centre setting pin **(Mot. 1766)**.

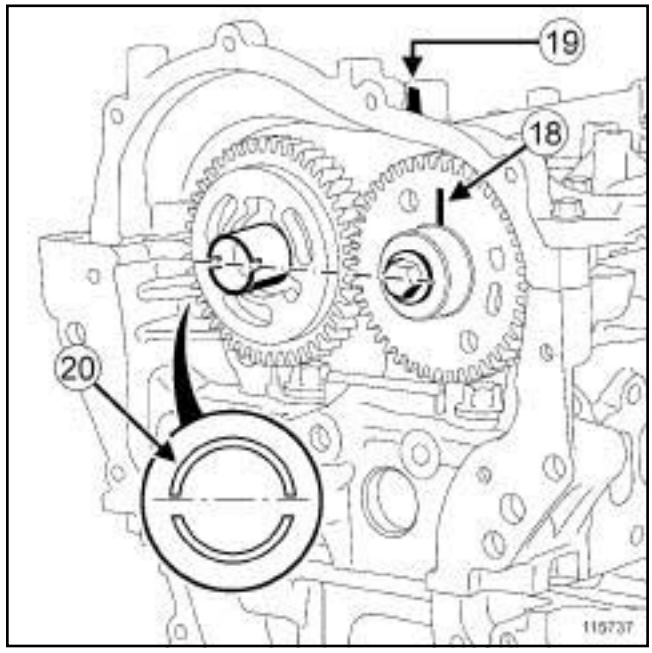

115737

❑ Check that:

- the mark (**18**) on the wear compensation pinion is opposite the boss (**19**) on the rocker cover,
- the groove on the camshaft (exhaust side) is horizontal (large offset (**20**) facing upwards).

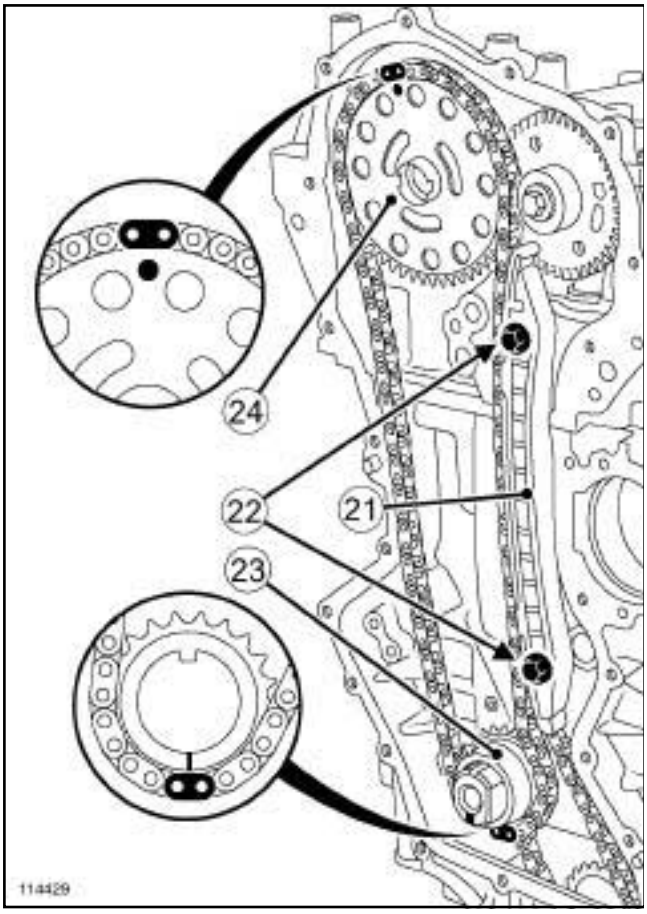

114429

❑ Fit the new timing chain guide (**21**) .

❑ Torque tighten:

- the **timing chain guide bolts (initial torque) (5 N.m)** (**22**) .
- the **timing chain guide bolts (25 N.m)** (**22**) .

❑ Fit the new timing sprocket (**23**) onto the crankshaft.

> Note:
>
> The timing chain does not have a direction of fitting.

❑ Position:

- the new timing chain on the sprocket (**23**) (align the mark on the sprocket with the copper chain links),
- the new timing sprocket (**24**) on the chain (align the mark on the sprocket with the copper chain links).

❑ Refit the timing sprocket (**24**) onto the camshaft on the exhaust side.

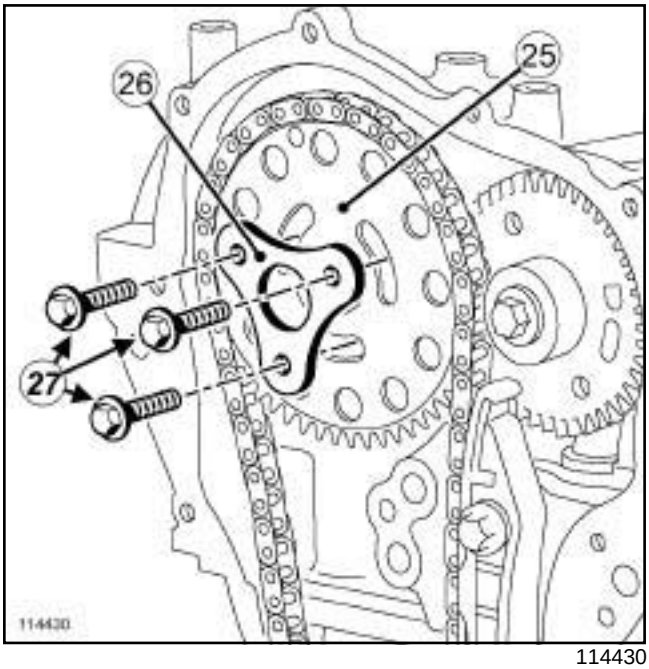

114430

❑ Place the new washer (**26**) of the timing sprocket (**25**) .

❑ Finger tighten the new bolts (**27**) of the sprocket.

> Note:
>
> Allow the timing sprocket (**25**) to rotate freely.

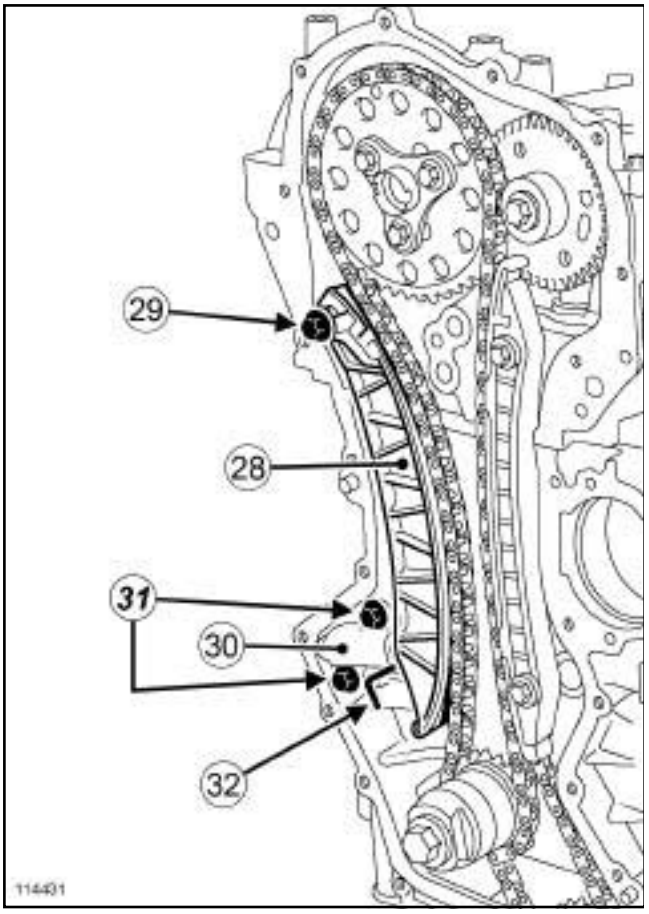

114431

- Fit the new timing chain tensioner guide (**28**) .
- Torque tighten the **bolt of the timing chain tensioner guide (25 N.m)** (**29**) .
- Fit the new timing hydraulic tensioner (**30**) with its locking pin (**32**) .

> Note:
>
> Check that the hydraulic tensioner (**30**) is in contact with the cylinder block before tightening the bolts.

- Torque tighten the **timing hydraulic tensioner bolts (10 N.m)** (**31**) .
- Remove the locking pin (**32**) .

M9R

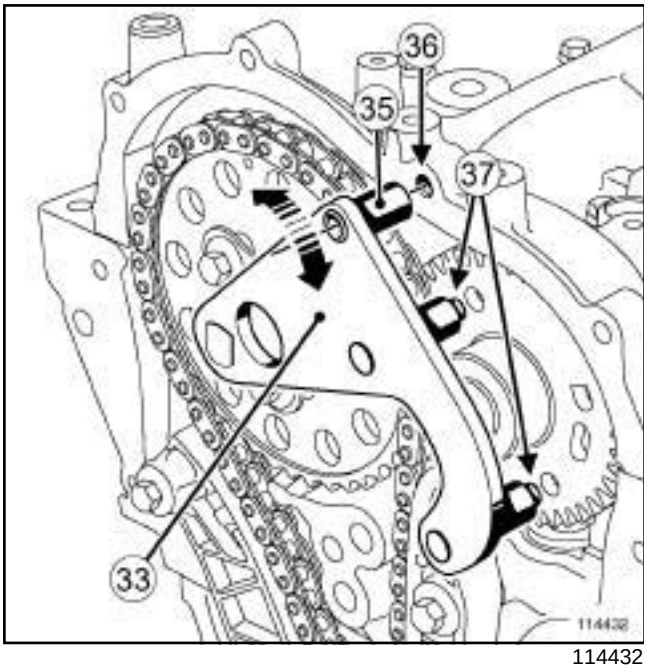

114432

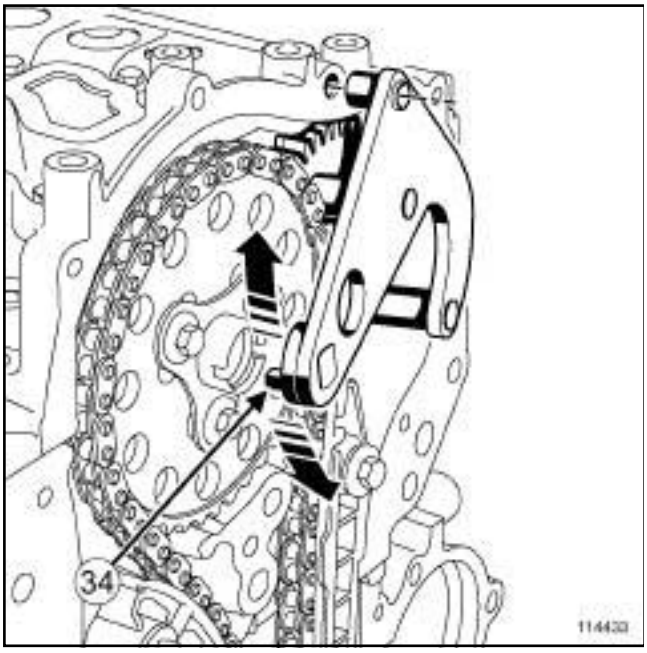

114433

❑ Engage the collet (**34**) of the tool **(Mot. 1769)** (**33**) into the camshaft groove.

> Note:
>
> Do not fit the pins (**37**) of the tool into the holes on the wear compensation pinion.

❑ Turn the tool to align the shafts on the spacer (**35**) and the hole (**36**) .

❑ Detach the collet (**34**) of the tool from the camshaft groove.

❑ Fit the pins (**37**) of the tool into the wear compensation pinion holes.

> Note:
>
> Do not fit the collet (**34**) of the tool into the groove on the exhaust side of the camshaft.

❑ Turn the tool to align the shafts on the spacer (**35**) and the hole (**36**) .

❑ Fit the collet (**34**) of the tool into the groove on the camshaft, without forcing it (if necessary, start the previous operations again).

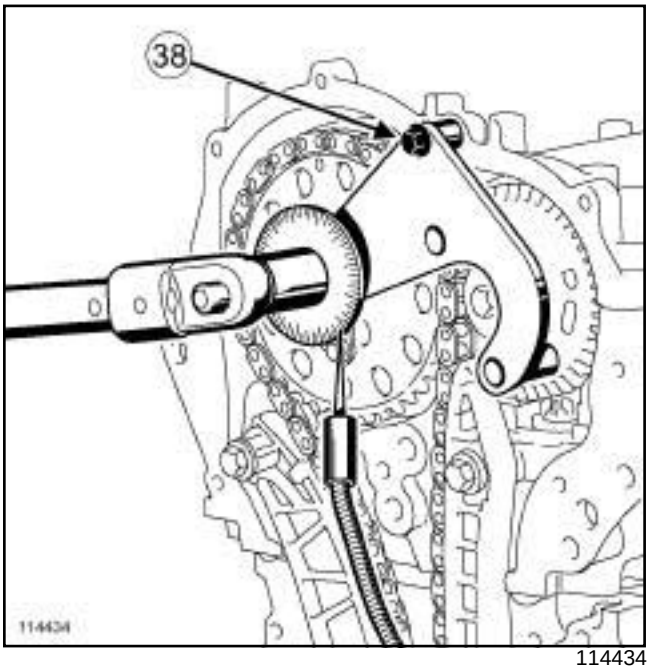

114434

❑ Fit the bolt (**38**) (M6 - 50 mm long) onto the tool.

❑ Torque tighten the **timing sprocket bolts on the exhaust side of the camshaft (10 N.m + 40° ± 6°)**.

❑ Remove:

- the bolt (**38**) ,

- the **(Mot. 1769)**,

- the tool **(Mot. 1766)** (TDC locating pin).

❑ Put two drops of **FRENETANCHE** (see **Vehicle: Parts and ingredients for the repairwork**) on the threading of the TDC setting pin hole plug.

❑ Torque tighten the **TDC setting pin hole plug (25 N.m)**.

M9R

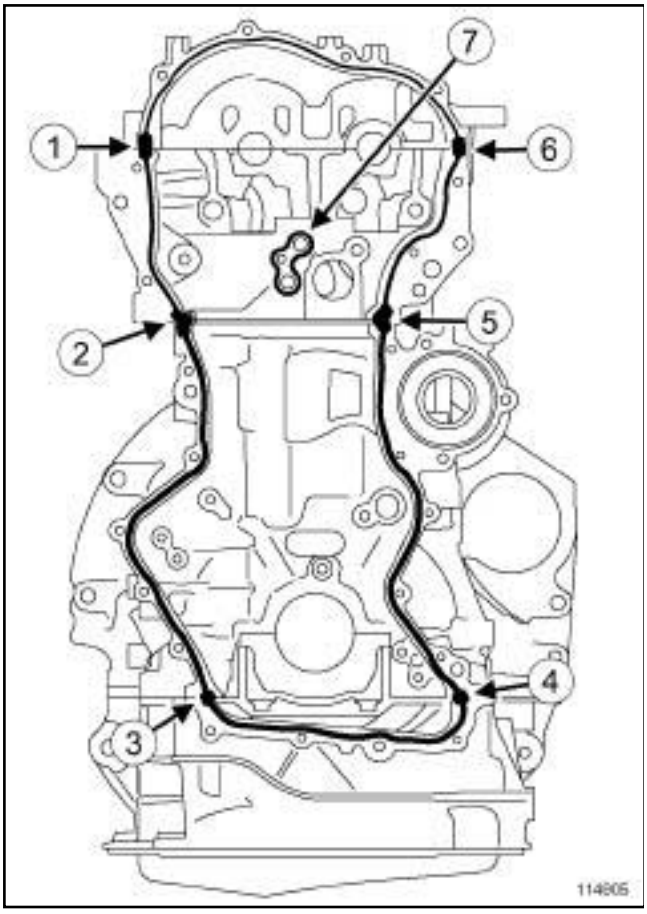

114905

❑ Apply a bead of **SILICONE ADHESIVE SEALANT** (see **Vehicle: Parts and ingredients for the repairwork**) to the timing face:

- 1 bead of∅ **5 ± 2 mm**.:
  - on the outline of the rocker cover, from (**1**) to (**6**) passing by the points (**2**) , (**3**) , (**4**) and (**5**) .
- 1 bead of∅ **11 ± 2 mm** for a length of **10 to 15 mm**.
  - on the points (**1**) , (**2**) , (**3**) , (**4**) , (**5**) , (**6**) .
- 1 bead of∅ **3.5 ± 1 mm**.
  - on the outline of the cylinder head and of the cylinder block, from (**6**) to (**1**) ,
  - on the edge (**7**) .

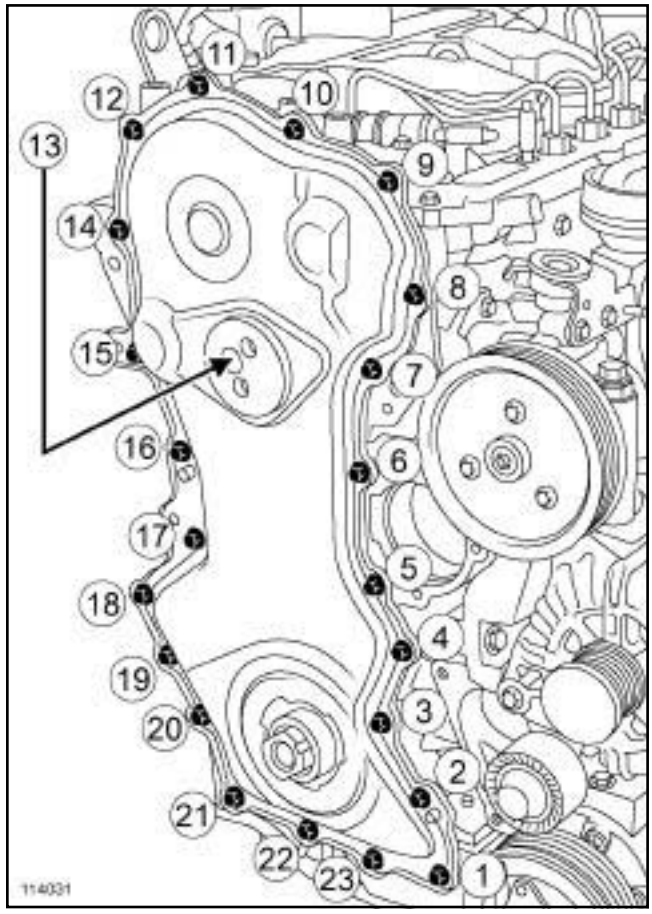

114031

❑ Refit the timing cover.

❑ Finger tighten the timing cover bolts in order from (**1**) to (**23**) until they make contact.

❑ Tighten to torque and in order:

- the **timing cover bolts (initial torque) (5 N.m)** from (**1**) to (**23**) ,
- the **M6 bolts on the timing cover (16 N.m)** from (**1**) to (**22**) ,
- the **M8 bolt on the timing cover (18 N.m)** (**23**) .

M9R

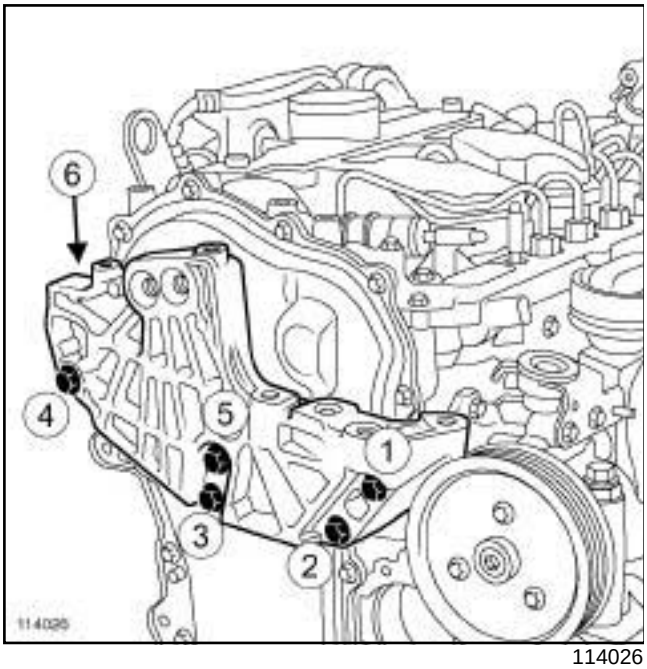

114026

- ❑ Refit the engine mounting.
- ❑ Finger tighten the engine mounting bolts in order (**1**) to (**6**) until they make contact.
- ❑ Tighten to torque and in order:
  - the **side bolts of the engine mounting on the cylinder head (30 N.m + 54° ± 6°)** from (**1**) to (**5**) .
  - the **upper bolt of the engine mounting on the cylinder head (25 N.m)** (**6**) .

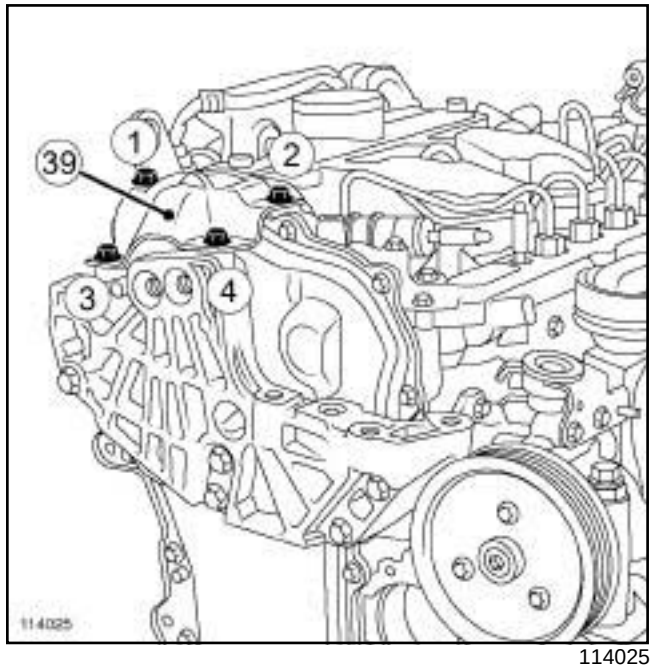

114025

- ❑ Refit the engine mounting reinforcement (**39**) .
- ❑ Finger tighten the reinforcement bolts in order (**1**) to (**4**) until they make contact.
- ❑ Torque tighten the **engine mounting reinforcement bolts (25 N.m)** from (**1**) to (**4**) .

III - FINAL OPERATION

- ❑ Fit the flywheel locking tool **(Mot. 1431)** onto the cylinder block.
- ❑ Refit:
  - the new crankshaft seal on the timing end (see **10A**, **Engine and cylinder block assembly**, **Crankshaft seal at timing end Removal - Refitting**, page **10A-1**) ,
  - the crankshaft accessories pulley (see **11A**, **Top and front of engine**, **Crankshaft accessories pulley: Removal - Refitting**, page **11A-11**) .
- ❑ Remove the tool **(Mot. 1431)**.

M9R

- Refit:
  - the coolant pump (see **19A**, **Cooling**, **Water pump: Removal - Refitting**, page **19A-29**) ,
  - the new accessories belt (see **11A**, **Top and front of engine**, **Accessories belt: Removal - Refitting**, page **11A-4**) .
- Remove the engine from the component support (see **Engine support equipment: Use**) .
- Refit the engine - gearbox assembly (see **10A**, **Engine and cylinder block assembly**, **Engine/gearbox assembly: Removal - Refitting**, page **10A-97**) .
- Fill up the engine oil (see **10A**, **Engine and cylinder block assembly**, **Engine oil: Draining - Refilling**, page **10A-43**) .

F4R

Essential equipment
diagnostic tool

I - REMOVAL PREPARATION OPERATION

❑ Position the vehicle on a two-post lift (see **Vehicle: Towing and lifting**) (MR 364, 02A, Lifting equipment).

❑ Disconnect the battery (see **Battery: Removal - Refitting**) (MR 364, 80A, Battery).

❑ Remove:

- the throttle valve (see **12A**, **Fuel mixture**, **Throttle valve: Removal - Refitting**, page **12A-40**) ,
- the intake distributor (see **12A**, **Fuel mixture**, **Inlet manifold: Removal - Refitting**, page **12A-49**) ,
- the ignition coils (see **17A**, **Ignition**, **Coils Removal - Refitting**, page **17A-1**) ,
- the oil decanter (see **11A**, **Top and front of engine**, **Oil decanter: Removal - Refitting**, page **11A-301**) ,
- the battery (see **Battery: Removal - Refitting**) (MR 364, 80A, Battery),
- the air filter box (see **12A**, **Fuel mixture**, **Air filter unit: Removal - Refitting**, page **12A-11**) ,
- the front right-hand wheel (see **Wheel: Removal - Refitting**) (MR 364, 35A, Wheels and tyres),
- the accessories belt (see **11A**, **Top and front of engine**, **Accessories belt: Removal - Refitting**, page **11A-4**) ,
- the timing belt (see **11A**, **Top and front of engine**, **Timing belt: Removal - Refitting**, page **11A-18**) .

II - OPERATION FOR REMOVAL OF PART CONCERNED

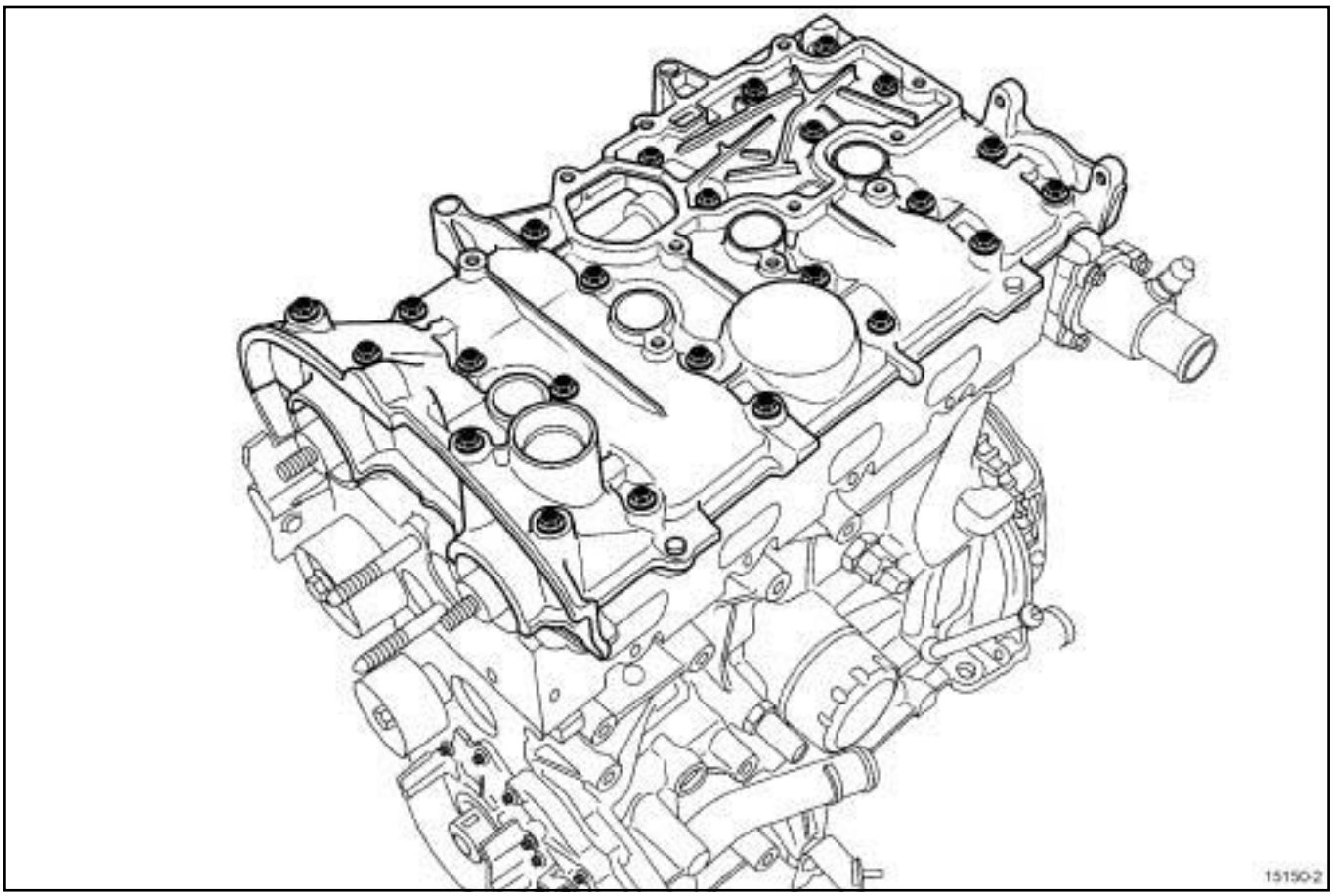

15150-2

❑ Undo all of the rocker cover bolts.

❑ Remove the rocker cover bolts.

F4R

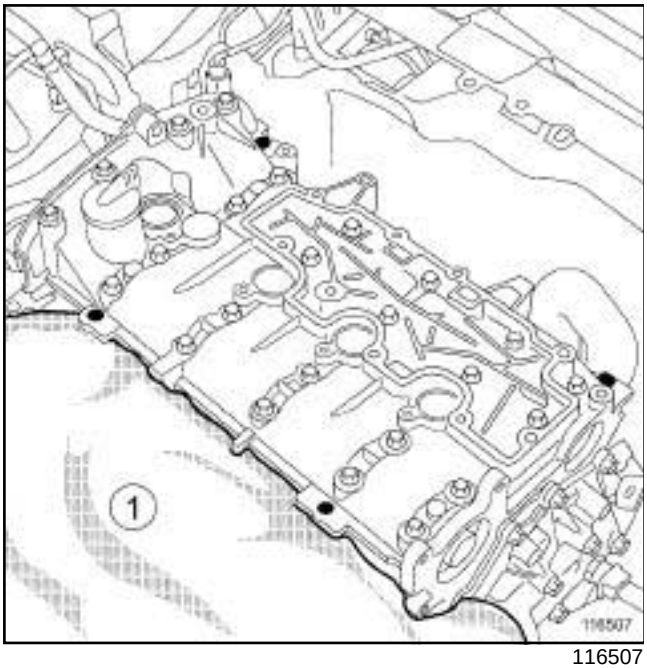

116507

❑ Using a clean cloth (**1**) , protect:

- the injector holder plate pipe openings to prevent any impurities from entering,
- the injector rail,
- the camshaft position sensor location.

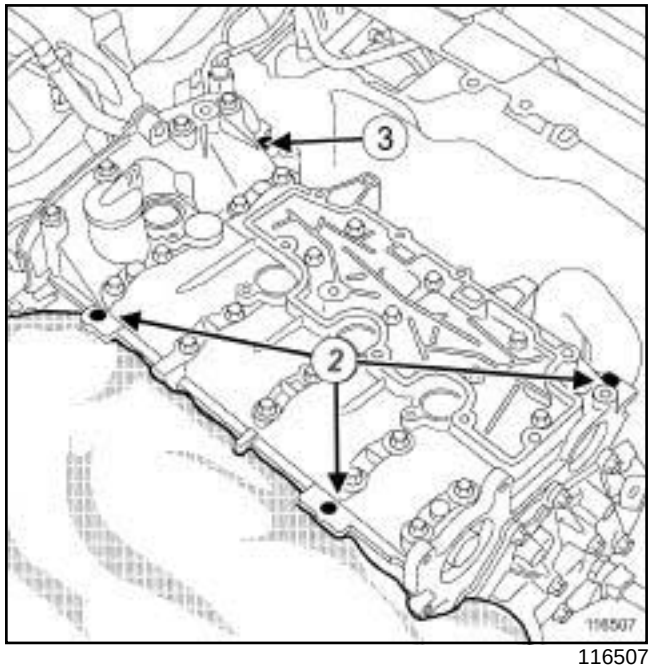

116507

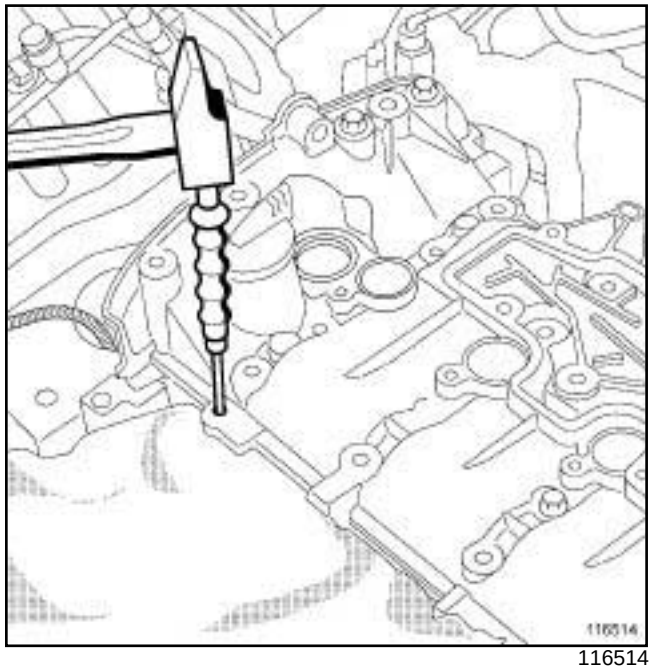

116514

❑ Remove the rocker cover centring devices (**2**) using a hammer and a drift to knock them downwards.

Note:

The centring device (**3**) must not be removed under any circumstances. Not following these instructions could damage the cylinder head.

F4R

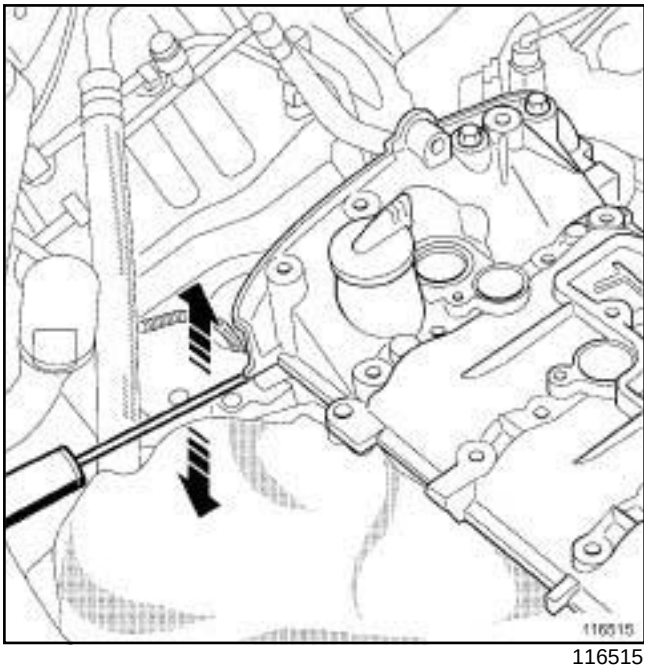

116515

❑ Press a flat-blade screwdriver onto the injector holder plate and use it to gently remove the adhesive from the rocker cover.

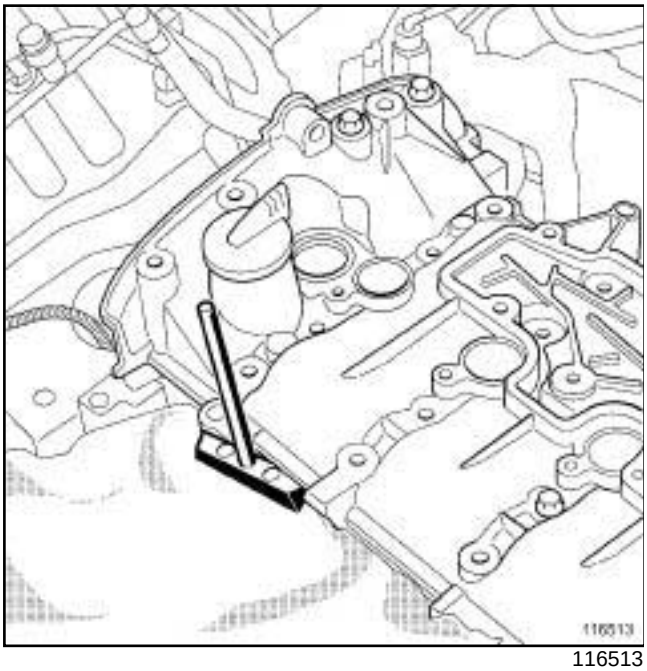

116513

❑ Remove the rocker cover using the.

❑ Remove the rocker cover.

I - REFITTING PREPARATIONS OPERATION

❑ Refit the centring devices on the cylinder head using a hammer and drift.

> **WARNING**
>
> The joint faces must be clean, dry and free from grease (avoid finger marks).
>
> Applying excess sealant could cause it to be squeezed out when parts are tightened. A mixture of sealant and fluid could damage certain components (engine, radiator, etc.).

II - OPERATION FOR REFITTING PART CONCERNED

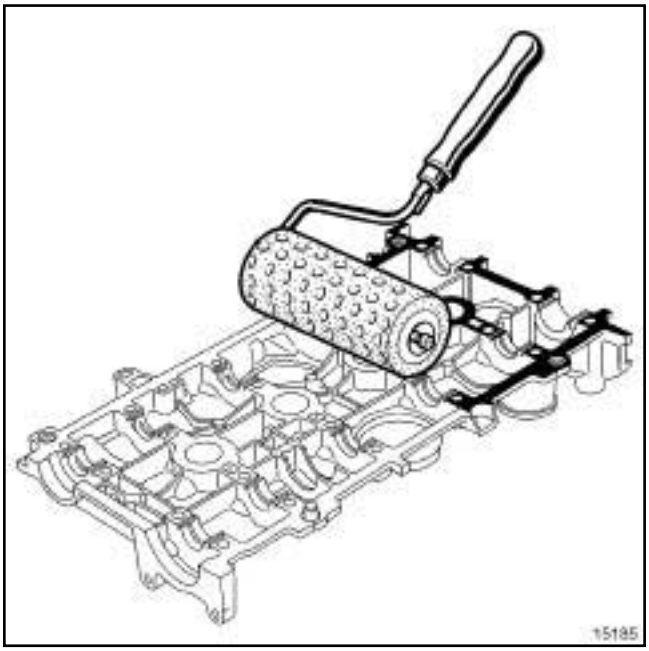

15185

❑ Remove any **« RESIN ADHESIVE »** (see **Packaging**) (MR 364, 04B, Products-consumables) on the rocker cover bearings using a cloth.

❑ Apply some **« RESIN ADHESIVE »** to the rocker cover gasket face using a stipple roller.

❑ Fit the rocker cover.

F4R

Position of the bolts

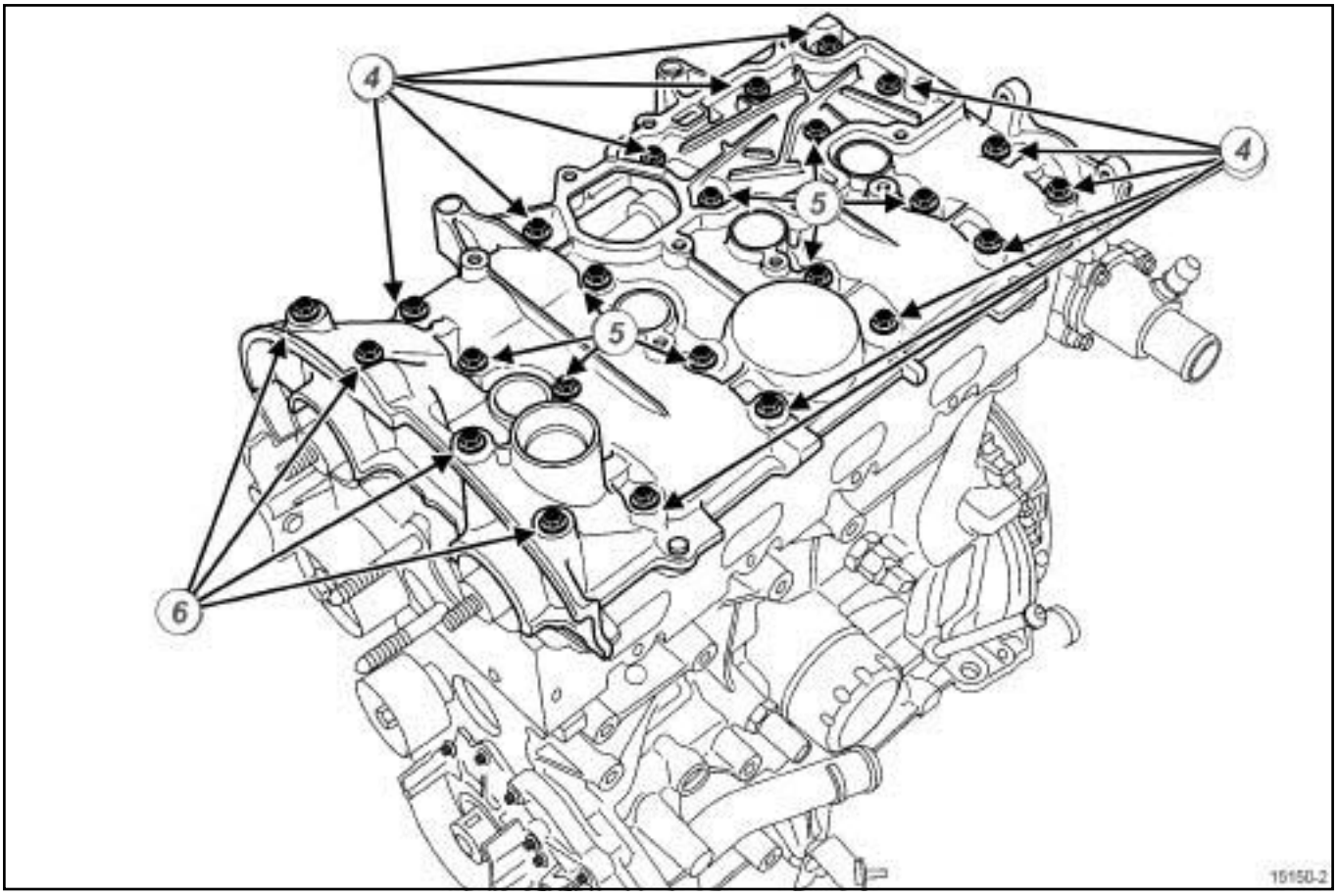

15150-2

(**4**) « short » bolts

(**5**) « medium » bolts

(**6**) « long » bolts

❑ Position the rocker cover bolts.

F4R

Rocker cover bolt tightening order

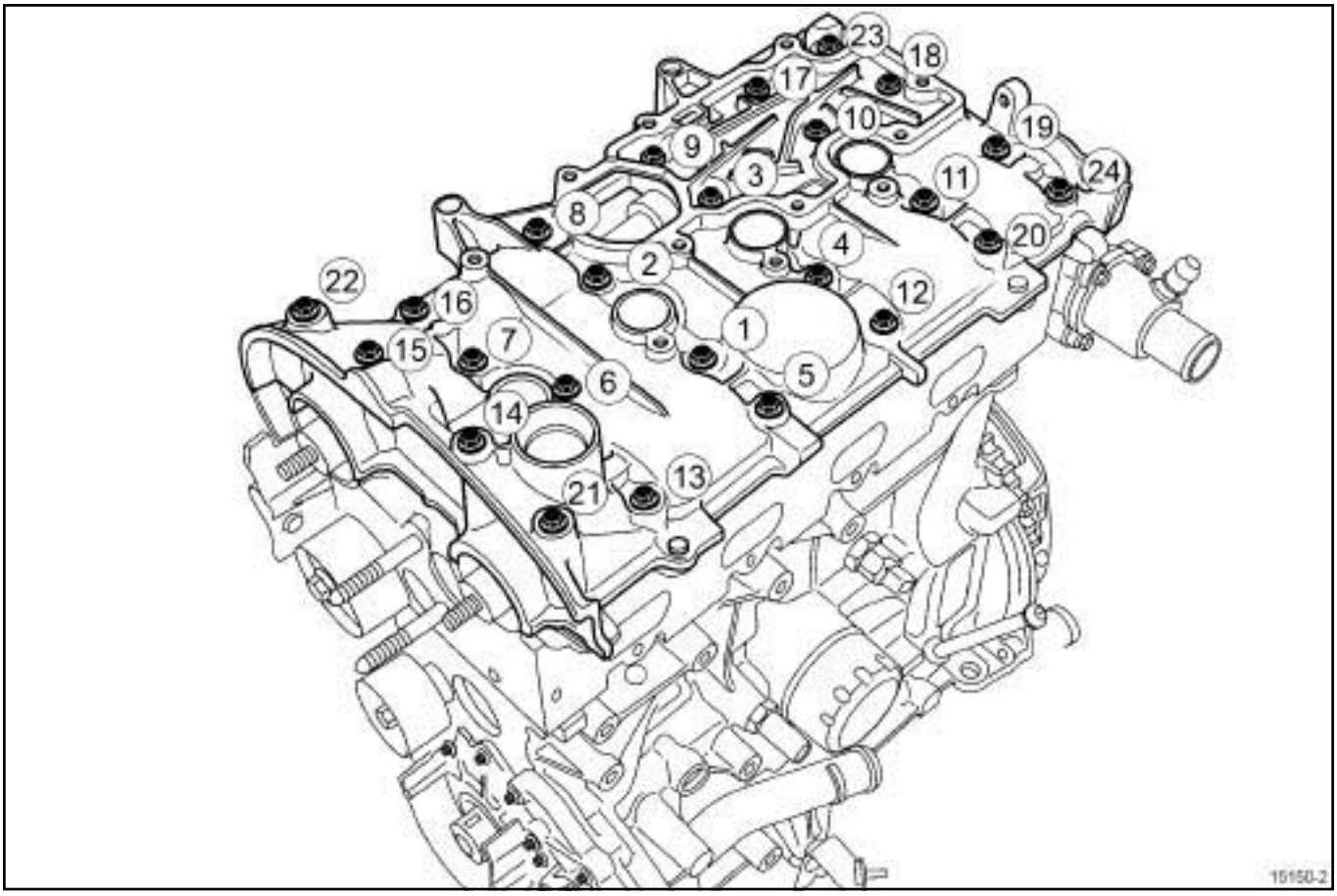

15150-2

- ❑ Tighten to torque and in order the **rocker cover bolts** (**22**) , (**23**) , (**20**) , (**13**) **(8 Nm)** to correctly position the rocker cover.
- ❑ Tighten to torque and in order the **rocker cover bolts** (**1**) to (**12**) , (**14**) to (**19**) , (**21**) and (**24**) **(12 Nm)**.
- ❑ Tighten to torque and in order the rocker cover bolts (**22**) , (**23**) , (**20**) , (**13**) **(12 Nm)**.

III - FINAL OPERATION.

- ❑ Refit:
  - the timing belt (see **11A**, **Top and front of engine**, **Timing belt: Removal - Refitting**, page **11A-18**) .
  - the accessories belt (see **11A**, **Top and front of engine**, **Accessories belt: Removal - Refitting**, page **11A-4**) .
  - the front right-hand wheel (see **Wheel: Removal - Refitting**) (MR 364, 35A, Wheels and tyres),
  - the air filter box (see **12A**, **Fuel mixture**, **Air filter unit: Removal - Refitting**, page **12A-11**) ,
  - the oil decanter (see **11A**, **Top and front of engine**, **Oil decanter: Removal - Refitting**, page **11A-301**) ,
  - the ignition coils (see **17A**, **Ignition**, **Coils Removal - Refitting**, page **17A-1**) ,
  - the intake distributor (see **12A**, **Fuel mixture**, **Inlet manifold: Removal - Refitting**, page **12A-49**) ,
  - the throttle valve (see **12A**, **Fuel mixture**, **Throttle valve: Removal - Refitting**, page **12A-40**) .
- ❑ Connect the battery (see **Battery: Removal - Refitting**) (MR 364, 80A, Battery).
- ❑ Using the **diagnostic tool**, check that there are no faults stored by the injection computer and clear them if necessary.

K9K, and 732 or 734

Tightening torques ▽	
camshaft position sensor bolt	**8 Nm**
rocker cover bolts	**11 Nm**

IMPORTANT
Wear heat protective gloves during the operation.

IMPORTANT
Wear latex gloves during the operation.

REMOVAL

I - REMOVAL PREPARATION OPERATION

❑ Remove the front engine cover.

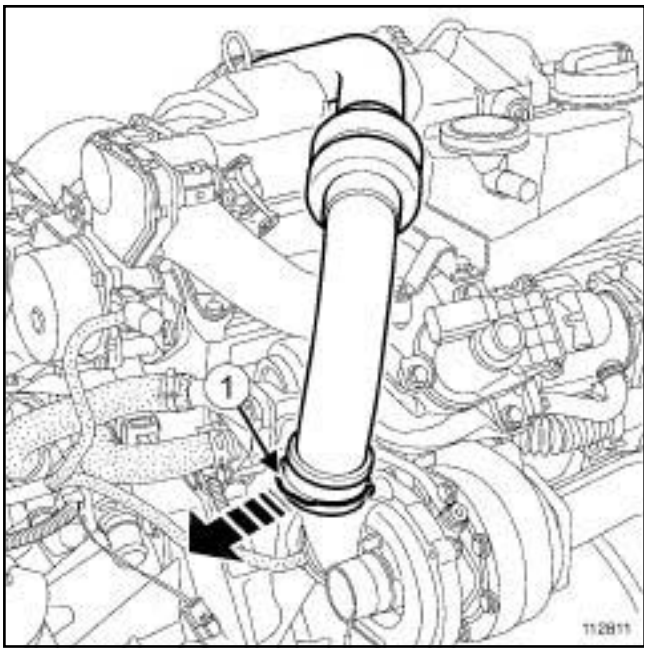

112811

❑ Pull the turbocharger air outlet pipe clip (**1**) .

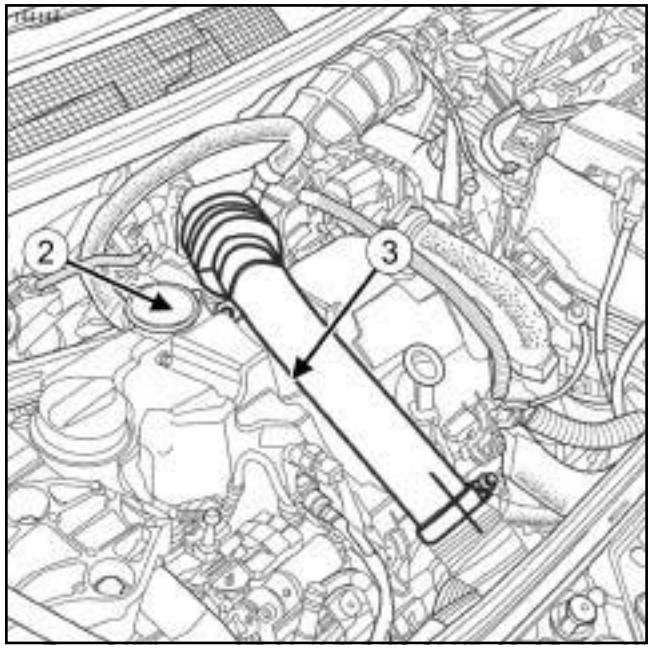

122144

❑ Remove the turbocharger air outlet pipe bolt (**2**) .

❑ Move aside the turbocharger air outlet pipe (**3**) .

❑ Disconnect the camshaft position sensor connector.

❑ Unpick the camshaft position sensor wiring harness on the injector rail protector.

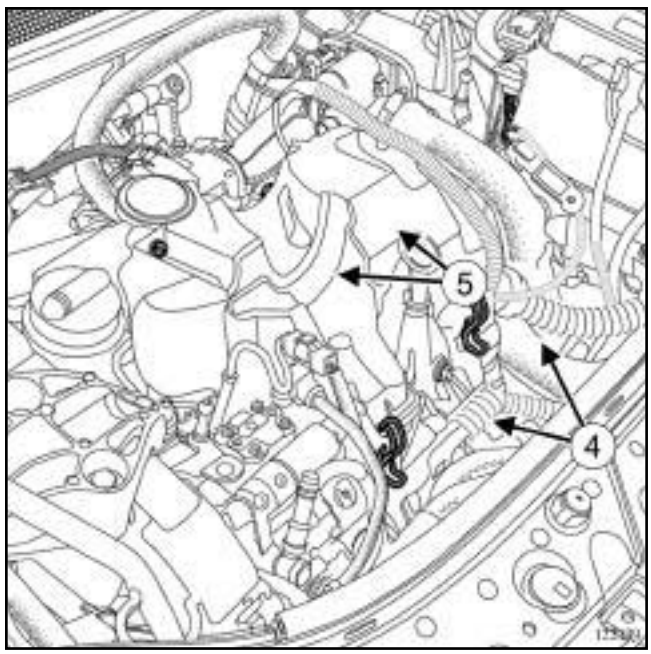

122139

❑ Unclip the injector rail protector cover (**4**) .

❑ Remove:

- the injector rail protector cover bolt and nut (**5**) ,
- the injector rail protector cover,

K9K, and 732 or 734

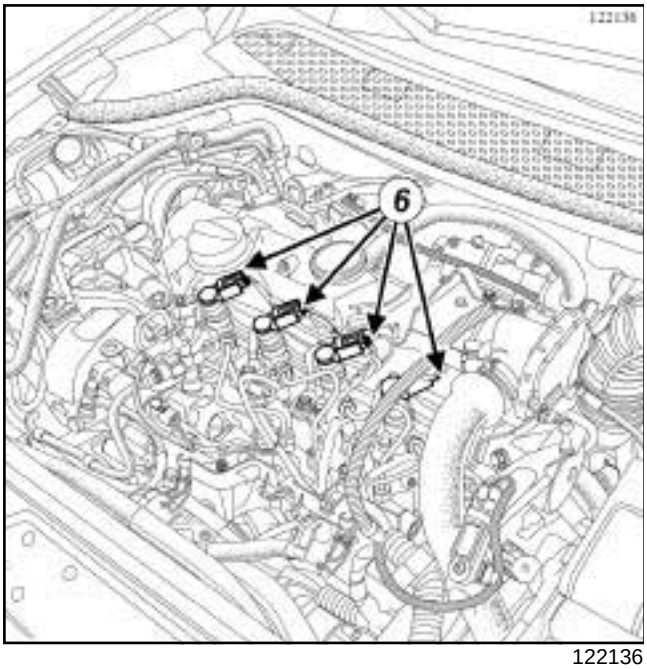

122136

❑ Disconnect the injector connector (**6**) .

❑ Unclip:

- the injector wiring harness from the rocker cover,
- the diesel return pipe from the rocker cover.

❑ Unpick the exhaust gas temperature sensor wiring harness from the injector rail protector cover bracket.

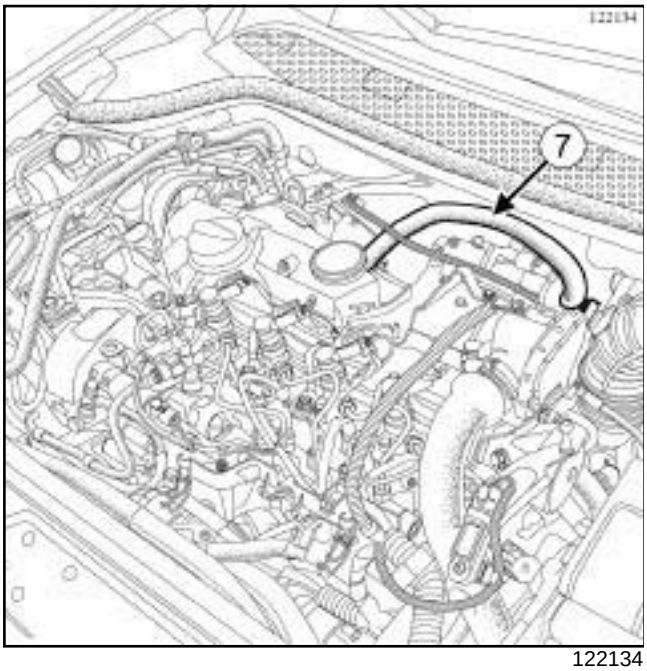

122134

❑ Disconnect the oil vapour rebreathing pipe (**7**) on the rocker cover side.

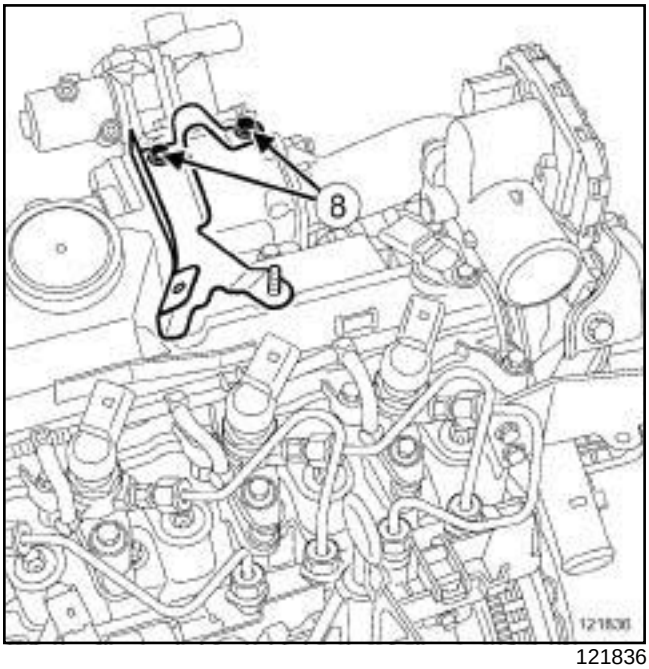

121836

❑ Remove:

- the injector rail protector cover bracket bolts (**8**) ,
- the injector rail protector cover bracket,
- the damper valve (see **12A**, **Fuel mixture**, **Air inlet flap: Removal - Refitting**, page **12A-33**) ,
- the right-hand suspended engine mounting (see **19D**, **Engine mounting**, **Right-hand suspended engine mounting: Removal - Refitting**, page **19D-20**) .

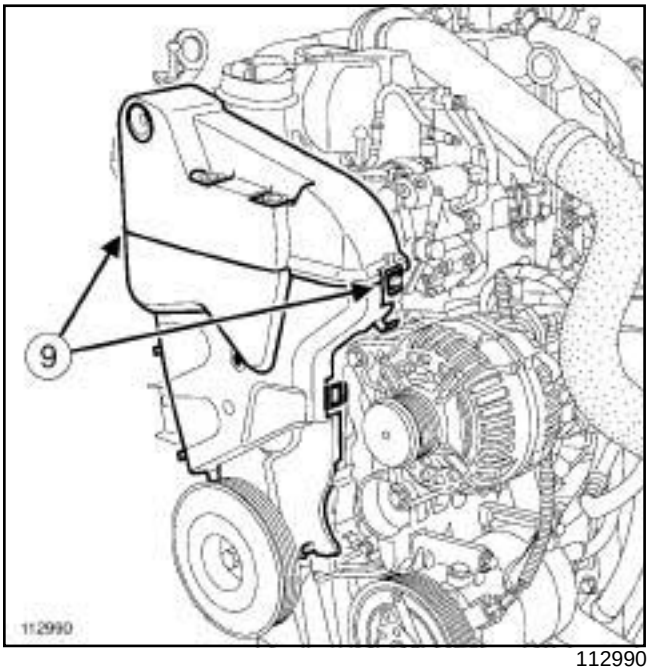

112990

❑ Unfasten the tabs at (**9**) .

❑ Remove the upper timing cover.

K9K, and 732 or 734

II - OPERATION FOR REMOVAL OF PART CONCERNED

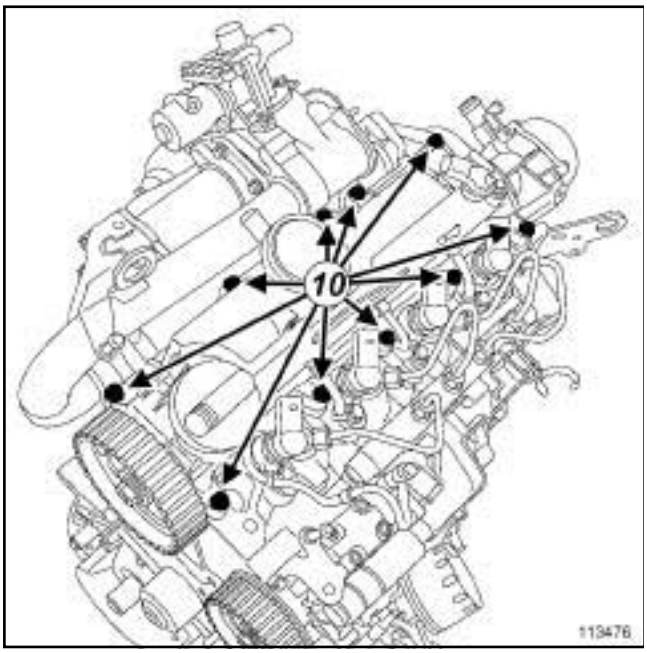

113476

❑ Remove:

- the rocker cover bolts (**10**) ,
- the rocker cover.

REFITTING

I - REFITTING PREPARATION OPERATION

❑ Clean the rocker cover joint face.

> **WARNING**
> The joint faces must be clean, dry and free from grease (avoid finger marks).

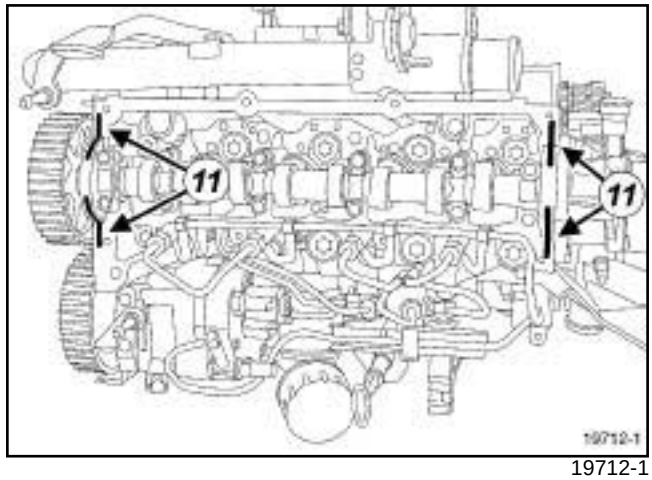

19712-1

❑ Apply beads (**11**) of **SILICONE ADHESIVE SEALANT** (see **Vehicle: Parts and ingredients for the repairwork**) (04B, Consumables - Products) with a diameter of **2 mm**.

> **WARNING**
> Applying excess sealant could cause it to be squeezed out when parts are tightened. A mixture of sealant and fluid could damage certain components (engine, radiator, etc.).

If replacing the rocker cover

❑ Remove:

- the bolt from the camshaft position sensor,
- the camshaft position sensor,
- the camshaft position sensor seal.

❑ Refit:

- the new camshaft position sensor seal,
- the camshaft position sensor onto the new rocker cover,
- the camshaft position sensor bolt.

❑ Torque tighten the **camshaft position sensor bolt (8 Nm)**.

II - REFITTING OPERATION FOR PART CONCERNED

❑ Clean the following bearing faces with buffing pads:

- of the cylinder head,
- of the rocker cover.

K9K, and 732 or 734

❏ Next, degrease these bearing faces using **SURFACE CLEANER** (see **Vehicle: Parts and ingredients for the repairwork**) (04B, Consumables - Products) and clean cloths.

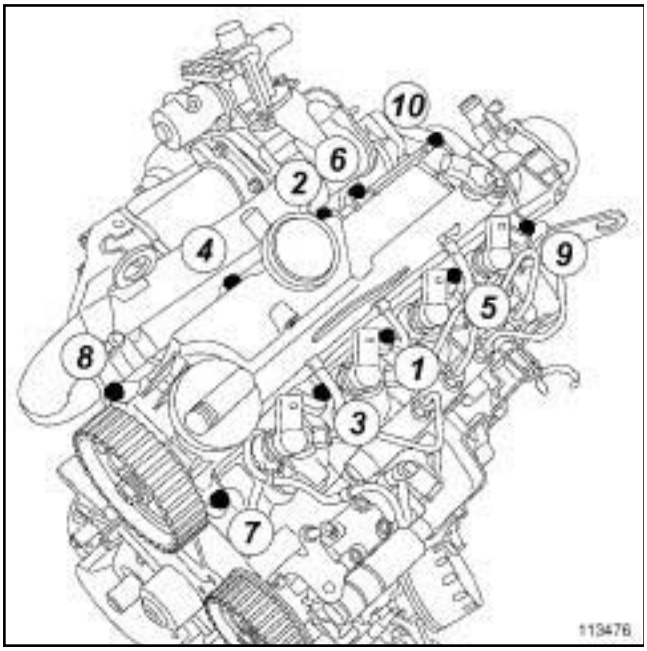

113476

❏ Refit the rocker cover.

❏ Fit without tightening the rocker cover bolts.

❏ Tighten to torque and in order the **rocker cover bolts (11 Nm)**.

III - FINAL OPERATION.

❏ Refit the upper timing cover.

❏ Clip the tabs into place.

❏ Refit:

- the right-hand suspended engine mounting (see **19D**, **Engine mounting**, **Right-hand suspended engine mounting: Removal - Refitting**, page **19D-20**) ,
- the damper valve (see **12A**, **Fuel mixture**, **Air inlet flap: Removal - Refitting**, page **12A-33**) ,
- the injector rail protector cover bracket,
- the injector rail protector cover bracket bolts.

❏ Connect the oil vapour rebreathing pipe on the rocker cover side.

❏ Attach the exhaust gas temperature sensor wiring harness onto the injector rail protector cover bracket.

❏ Clip:

- the diesel return pipe to the rocker cover,
- the injector wiring harness to the rocker cover.

❏ Connect the injector connector.

❏ Refit:

- the injector rail protector cover,
- the injector rail protector cover bolt and nut.

❏ Clip the injector rail protector cover into place.

❏ Connect the camshaft position sensor connector.

❏ Attach the camshaft position sensor wiring harness to the injector rail protector.

❏ Push the turbocharger air outlet pipe clip.

❏ Connect the turbocharger air outlet pipe by aligning the marks.

❏ Refit:

- the turbocharger air outlet pipe bolt,
- the engine cover.

M9R

Essential special tooling	
Mot. 1431	Flywheel locking tool.
Mot. 1766	TDC locating pin.

REMOVAL

I - REMOVAL PREPARATION OPERATION

❑

WARNING

It is strictly forbidden to apply any pressure to the engine oil sump. Damage to the sump may also damage the engine by:

- blocking the strainer,
- raising the oil level above maximum, with a risk of engine racing.

Note:

Consult the safety and cleanliness advice and operation recommendations before carrying out any operation (see **Engine: Precautions for repair**) .

❑ Remove the engine - gearbox assembly (see **10A**, **Engine and cylinder block assembly**, **Engine/ gearbox assembly: Removal - Refitting**, page **10A-97**) .

❑ Place the engine on the component support (see **Engine support equipment: Use**) .

❑ Drain the engine (see **10A**, **Engine and cylinder block assembly**, **Engine oil: Draining - Refilling**, page **10A-43**) .

❑ Remove:

- the accessories belt (see **11A**, **Top and front of engine**, **Accessories belt: Removal - Refitting**, page **11A-4**) ,
- the coolant pump (see **19A**, **Cooling**, **Water pump: Removal - Refitting**, page **19A-29**) .

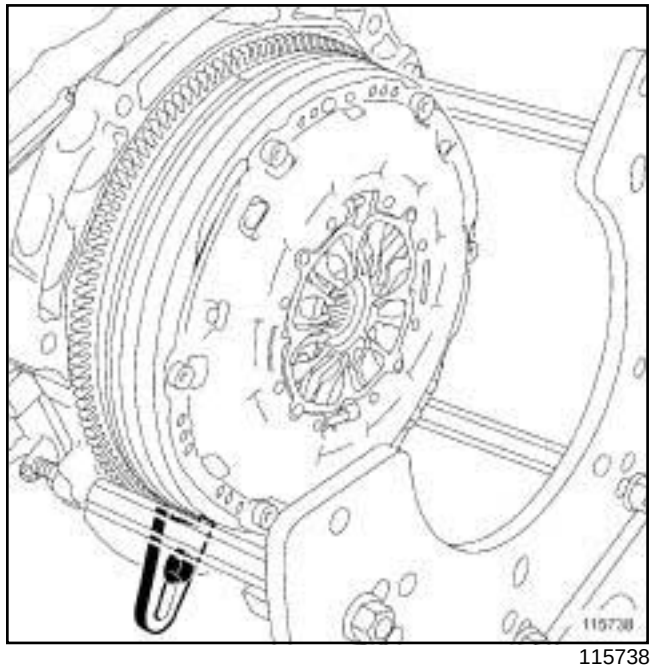

115738

❑ Fit the flywheel locking tool **(Mot. 1431)** onto the cylinder block.

❑ Remove:

- the crankshaft accessories pulley (see **11A**, **Top and front of engine**, **Crankshaft accessories pulley: Removal - Refitting**, page **11A-11**) ,
- the flywheel locking tool **(Mot. 1431)**,
- the crankshaft seal on the timing side (see **10A**, **Engine and cylinder block assembly**, **Crankshaft seal at timing end Removal - Refitting**, page **10A-1**) ,
- the timing chain (see **11A**, **Top and front of engine**, **Timing chain: Removal - Refitting**, page **11A-147**) ,

M9R, and 721 or 722 or 724

❑ Remove the exhaust gas pressure sensor (see **19B**, **Exhaust**, **Exhaust gas pressure sensor: Removal - Refitting**, page **19B-112**) .

❑ Remove:

- the vacuum pump (see **Vacuum pump: Removal - Refitting**) ,
- the high pressure pipe between the pump and the rail (see **13B**, **Diesel injection**, **High-pressure pipe between the pump and rail: Removal - Refitting**, page **13B-160**) ,

M9R

- the oil separator (see **11A**, **Top and front of engine**, **Oil decanter: Removal - Refitting**, page **11A-301**) ,
- the diesel return rail (see **13B**, **Diesel injection**, **Diesel injector fuel return rail: Removal - Refitting**, page **13B-148**) ,
- the high pressure pipes between the rail and the injectors (see **13B**, **Diesel injection**, **High-pressure pipe between the rail and injector: Removal - Refitting**, page **13B-181**) ,
- the diesel injectors (see **13B**, **Diesel injection**, **Diesel injector: Removal - Refitting**, page **13B-258**) .

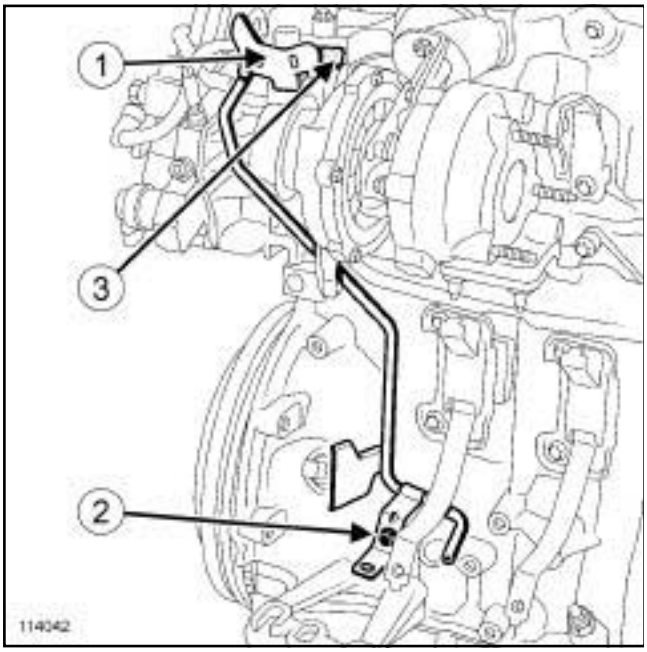

114042

❑ Remove the bolts (**1**) and (**2**) of the fuel collector outlet pipe of the cylinder head.

❑ Disconnect the fuel collector outlet pipe from the cylinder head at (**3**) .

❑ Move aside the fuel collector outlet pipe from the cylinder head.

II - REMOVAL OF THE ROCKER COVER

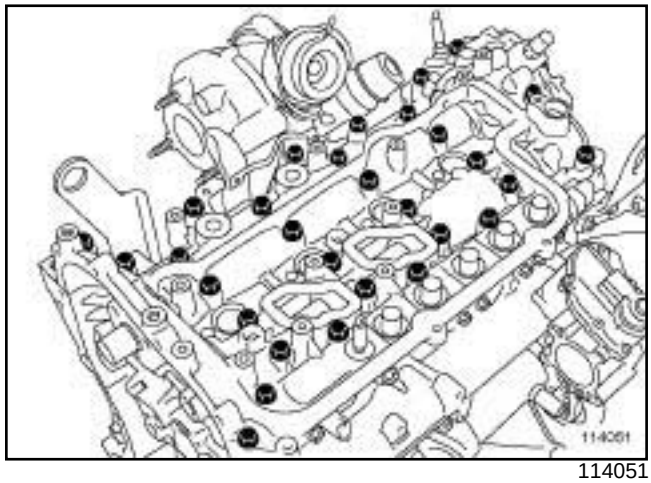

114051

❑ Remove the rocker cover bolts.

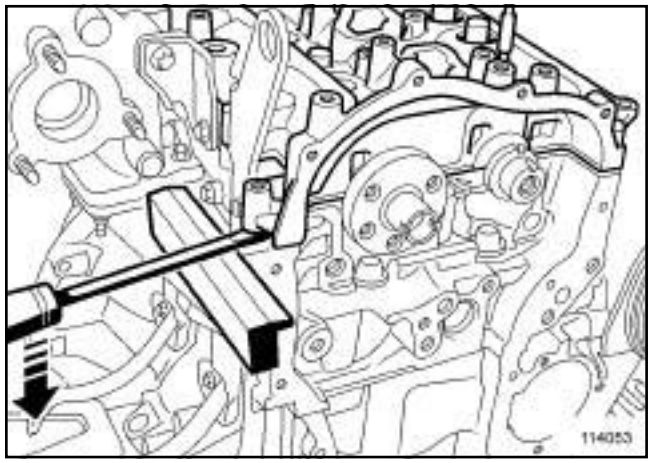

114053

❑ Position a protective shim on the cylinder head.

❑ Detach the rocker cover using a flat-blade screwdriver, using the shim for leverage

❑ Remove the rocker cover - camshafts assembly

M9R

REFITTING

I - REFITTING PREPARATION OPERATION

❑ Clean using **SUPER CLEANING AGENT FOR JOINT FACES** (see **Vehicle: Parts and ingredients for the repairwork**) :

- the joint face on the rocker cover,
- the joint face on the cylinder head.

> **WARNING**
> Do not scrape the joint faces of the aluminium, any damage caused to the joint face will result in a risk of leaks.

> **WARNING**
> Clean the cylinder head carefully to avoid any foreign bodies entering the oil return and supply pipes.
>
> Failure to follow this advice could lead to the blocking of the various oil inlet galleries, which would quickly result in engine damage.

❑ Remove the residue using a plastic spatula.

❑ Finish cleaning the joint faces using a **GREY ABRASIVE PAD**.

❑ Use **SURFACE CLEANER** (see **Vehicle: Parts and ingredients for the repairwork**) to clean:

- the joint face on the rocker cover,
- the joint face on the cylinder head.

> **WARNING**
> To ensure proper sealing, the gasket surfaces must be clean, dry and not greasy (avoid any finger marks).

> **WARNING**
> Applying excess sealant could cause it to be squeezed out when parts are tightened. A mixture of sealant and fluid could damage certain components (engine, radiator, etc.).

II - REFITTING THE ROCKER COVER

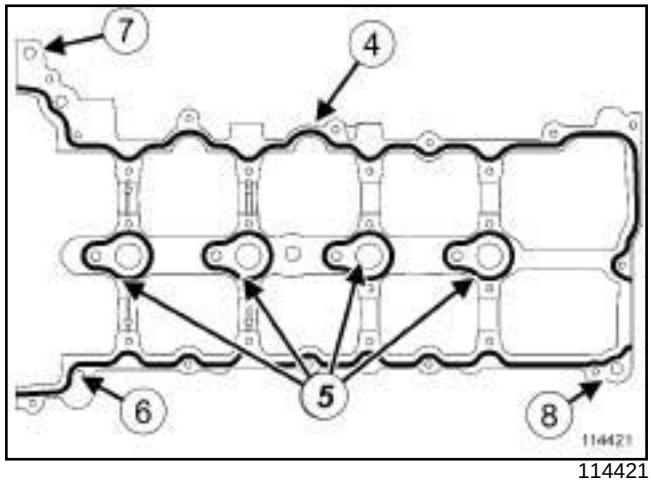

114421

❑ Apply a bead of **SILICONE ADHESIVE SEALANT** (see **Vehicle: Parts and consumables for repair**) with a diameter of **1.5 ± 1 mm** to the cylinder head at (**4**) , (**5**) and (**6**) .

❑ Fit two studs (M6 - length 60 mm) into the holes (**7**) and (**8**) on the cylinder head to guide the rocker cover.

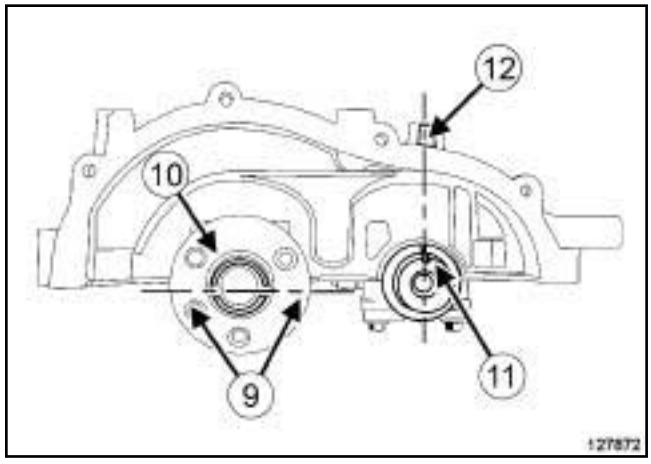

127872

❑ Position:

- the groove on the exhaust side of the camshaft (**9**) horizontally (large clearance (**10**) facing upwards),
- the groove on the inlet side of the camshaft (**11**) facing towards the rocker cover boss (**12**) .

❑ Check that cylinders 1 and 4 are at Top Dead Centre using the **(Mot. 1766)** (see **11A**, **Top and front of engine**, **Timing chain: Removal - Refitting**, page **11A-147**) .

❑ Refit the rocker cover - camshafts assembly.

M9R

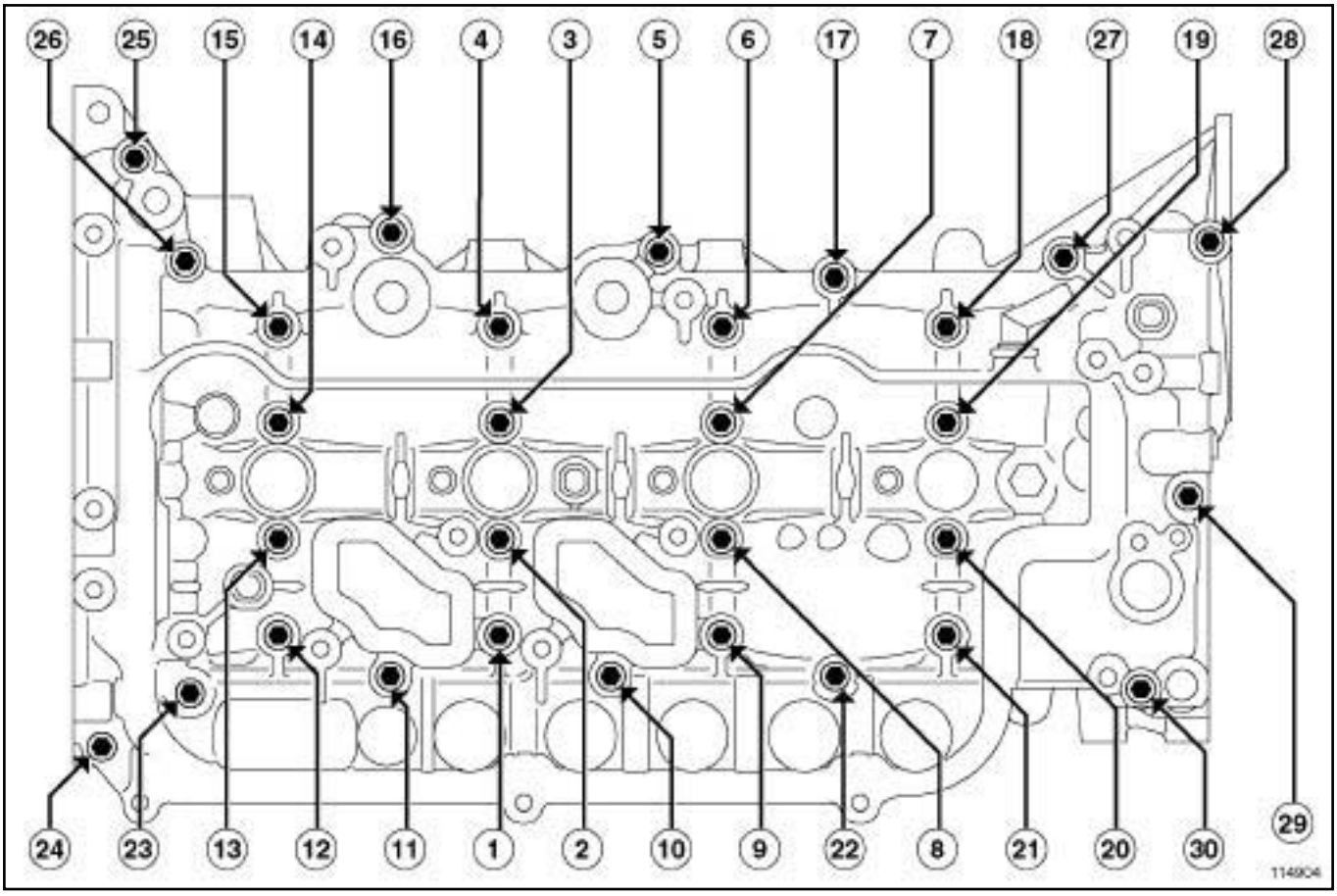

114904

- ❑ Tighten in order and successively, the rocker cover bolts **(12), (15),(18)** and **(21)** to gradually fit the rocker cover on the cylinder head.
- ❑ Remove the two rocker cover guide studs.
- ❑ Fit without tightening the remaining rocker cover bolts.
- ❑ Loosen bolts **(12), (15), (18)** and **(21)**.
- ❑ Fit without tightening bolts **(12), (15), (18)** and **(21)**.
- ❑ Tighten the rocker cover bolts in order.
- ❑ Clean the excess silicone adhesive sealant on the timing and coupling faces using a plastic spatula.

III - FINAL OPERATION

- ❑ Connect the fuel collector outlet pipe of the cylinder head.
- ❑ Tighten the bolts of the fuel collector outlet pipe of the cylinder head.
- ❑ Refit:
  - the diesel injectors (see **13B**, **Diesel injection**, **Diesel injector: Removal - Refitting**, page **13B-258**) ,
  - the high pressure pipes between the rail and the injectors (see **13B**, **Diesel injection**, **High-pressure pipe between the rail and injector: Removal - Refitting**, page **13B-181**) ,
  - the diesel return rail (see **13B**, **Diesel injection**, **Diesel injector fuel return rail: Removal - Refitting**, page **13B-148**) ,
  - the oil separator (see **11A**, **Top and front of engine**, **Oil decanter: Removal - Refitting**, page **11A-301**) ,
  - the high pressure pipe between the pump and the rail (see **13B**, **Diesel injection**, **High-pressure pipe between the pump and rail: Removal - Refitting**, page **13B-160**) ,
  - the vacuum pump (see **Vacuum pump: Removal - Refitting**) .

M9R, and 721 or 722 or 724

- ❑ Refit the exhaust gas pressure sensor (see **19B**, **Exhaust**, **Exhaust gas pressure sensor: Removal - Refitting**, page **19B-112**) .

M9R

- Refit:
  - the timing chain (see **11A**, **Top and front of engine**, **Timing chain: Removal - Refitting**, page **11A-147**) ,
  - the new crankshaft seal on the timing end (see **10A**, **Engine and cylinder block assembly**, **Crankshaft seal at timing end Removal - Refitting**, page **10A-1**) .
- Fit the flywheel locking tool **(Mot. 1431)** onto the cylinder block.
- Refit the crankshaft accessories pulley (see **11A**, **Top and front of engine**, **Crankshaft accessories pulley: Removal - Refitting**, page **11A-11**) .
- Remove the flywheel locking tool **(Mot. 1431)**.
- Refit:
  - the coolant pump (see **19A**, **Cooling**, **Water pump: Removal - Refitting**, page **19A-29**) ,
  - the new accessories belt (see **11A**, **Top and front of engine**, **Accessories belt: Removal - Refitting**, page **11A-4**) .
- Remove the engine from the component support (see **Engine support equipment: Use**) .
- Refit the engine - gearbox assembly (see **10A**, **Engine and cylinder block assembly**, **Engine/gearbox assembly: Removal - Refitting**, page **10A-97**) .
- Top up the engine oil (see **10A**, **Engine and cylinder block assembly**, **Engine oil: Draining - Refilling**, page **10A-43**) .

K9K

IMPORTANT
Wear protective gloves during the operation.

IMPORTANT
Wear latex gloves during the operation.

WARNING
Prepare for the flow of fluid, and protect the surrounding components.

REMOVAL

I - REMOVAL PREPARATION OPERATION

❑ Position the vehicle on a two-post lift (see **Vehicle: Towing and lifting**) (MR 364, 02A, Lifting equipment).

❑ Disconnect the battery (see **Battery: Removal - Refitting**) (MR 364, 80A, Battery).

❑ Remove:

- the scuttle panel grille (see **Scuttle panel grille: Removal - Refitting**) (MR 365, 56A, Exterior equipment),
- the front right-hand wheel (see **Wheel: Removal - Refitting**) (MR 364, 35A, Wheels and tyres),
- the front section of the front right-hand wheel arch liner (see **Front wheel arch liner: Removal - Refitting**) (MR 365, 55A, Exterior protection),
- the engine undertray bolts,
- the engine undertray,
- the accessories belt (see **11A**, **Top and front of engine**, **Accessories belt: Removal - Refitting**, page **11A-4**) ,
- the right-hand suspended engine mounting (see **19D**, **Engine mounting**, **Right-hand suspended engine mounting: Removal - Refitting**, page **19D-20**) ,
- the timing belt (see **11A**, **Top and front of engine**, **Timing belt: Removal - Refitting**, page **11A-18**) ,
- the damper valve (see **12A**, **Fuel mixture**, **Air inlet flap: Removal - Refitting**, page **12A-33**) ,
- the vacuum pump (see **Vacuum pump: Removal - Refitting**) (MR 364, 37A, Mechanical component controls),
- the rocker cover (see **11A**, **Top and front of engine**, **Rocker cover: Removal - Refitting**, page **11A-158**) .

II - OPERATION FOR REMOVAL OF PART CONCERNED

❑ Remove the camshaft (see **Cylinder head: Dismantling**) (Technical Note 6006A, 10A, Engine and peripherals).

REFITTING

I - REFITTING OPERATION FOR PART CONCERNED

❑ Refit the camshaft (see **Cylinder head: Refitting**) (Technical Note 6006A, 10A, Engine and peripherals).

II - FINAL OPERATION.

❑ Refit:

- the rocker cover (see **11A**, **Top and front of engine**, **Rocker cover: Removal - Refitting**, page **11A-158**) ,
- the vacuum pump (see **Vacuum pump: Removal - Refitting**) (MR 364, 37A, Mechanical component controls),
- the damper valve (see **12A**, **Fuel mixture**, **Air inlet flap: Removal - Refitting**, page **12A-33**) ,
- the timing belt (see **11A**, **Top and front of engine**, **Timing belt: Removal - Refitting**, page **11A-18**) ,
- the right-hand suspended engine mounting (see **19D**, **Engine mounting**, **Right-hand suspended engine mounting: Removal - Refitting**, page **19D-20**) ,
- the accessories belt (see **11A**, **Top and front of engine**, **Accessories belt: Removal - Refitting**, page **11A-4**) ,
- the engine undertray,
- the engine undertray bolts,
- the front section of the front right-hand wheel arch liner (see **Front wheel arch liner: Removal - Refitting**) (MR 365, 55A, Exterior protection),
- the front right-hand wheel (see **Wheel: Removal - Refitting**) (MR 364, 35A, Wheels and tyres),
- the scuttle panel grille (see **Scuttle panel grille: Removal - Refitting**) (MR 365, 56A, Exterior equipment).

K9K

- Connect the battery (see **Battery : Removal - Refitting**) (MR 364, 80A, Battery).

M9R

Essential special tooling	
Mot. 1431	Flywheel locking tool.
Mot. 1573	Cylinder head support

Tightening torques ▽	
high pressure pump drive pinion bolt	**40 N.m + 34° ± 6°**
camshaft bearing cap bolts	**10 N.m**

REMOVAL

I - REMOVAL PREPARATION OPERATION

❑

WARNING

It is strictly forbidden to apply any pressure to the engine oil sump. Damage to the sump will irreparably damage the engine by:

- blocking the strainer,
- raising the oil level above maximum, with a risk of engine racing.

Note:

Consult the safety and cleanliness advice and operation recommendations before carrying out any operation (see **Engine: Precautions for repair**) .

❑ Remove the engine - gearbox assembly (see **10A**, **Engine and cylinder block assembly**, **Engine/ gearbox assembly: Removal - Refitting**, page **10A-97**) .

❑ Place the engine on the component support (see **Engine support equipment: Use**) .

❑ Drain the engine (see **10A**, **Engine and cylinder block assembly**, **Engine oil: Draining - Refilling**, page **10A-43**) .

❑ Remove:

- the accessories belt (see **11A**, **Top and front of engine**, **Accessories belt: Removal - Refitting**, page **11A-4**) ,
- the coolant pump (see **19A**, **Cooling**, **Water pump: Removal - Refitting**, page **19A-29**) .

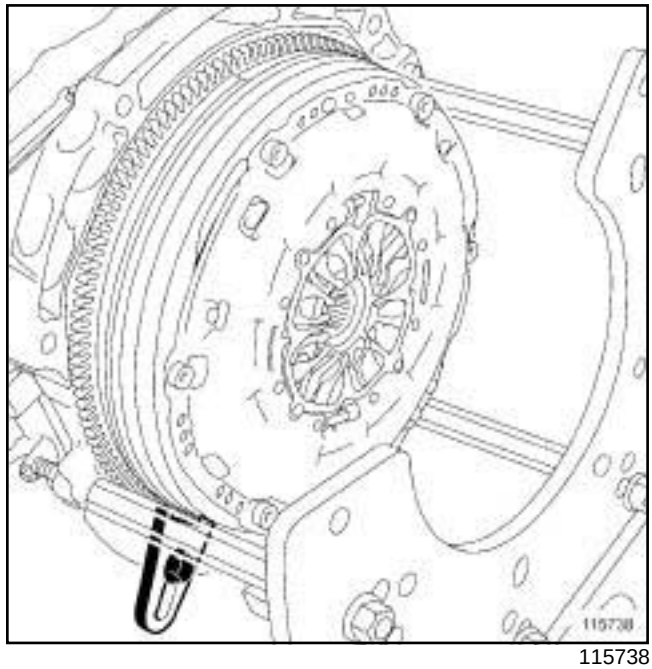

115738

❑ Fit the flywheel locking tool **(Mot. 1431)** onto the cylinder block.

❑ Remove:

- the crankshaft accessories pulley (see **11A**, **Top and front of engine**, **Crankshaft accessories pulley: Removal - Refitting**, page **11A-11**) ,
- the flywheel locking tool **(Mot. 1431)**.
- the crankshaft seal on the timing side (see **10A**, **Engine and cylinder block assembly**, **Crankshaft seal at timing end Removal - Refitting**, page **10A-1**) ,
- the timing chain (see **11A**, **Top and front of engine**, **Timing chain: Removal - Refitting**, page **11A-147**) ,
- the timing sprockets (see **Timing sprocket: Removal - Refitting**) .

M9R, and 721 or 722 or 724

❑ Remove the exhaust gas pressure sensor (see **19B**, **Exhaust**, **Exhaust gas pressure sensor: Removal - Refitting**, page **19B-112**) .

❑ Remove:

- the vacuum pump (see **Vacuum pump: Removal - Refitting**) ,

- the high pressure pipe between the pump and the rail (see **13B**, **Diesel injection**, **High-pressure pipe between the pump and rail: Removal - Refitting**, page **13B-160**) ,
- the oil separator (see **11A**, **Top and front of engine**, **Oil decanter: Removal - Refitting**, page **11A-301**) ,
- the diesel return rail (see **13B**, **Diesel injection**, **Diesel injector fuel return rail: Removal - Refitting**, page **13B-148**) ,
- the high pressure pipes between the rail and the injectors (see **13B**, **Diesel injection**, **High-pressure pipe between the rail and injector: Removal - Refitting**, page **13B-181**) ,
- the diesel injectors (see **13B**, **Diesel injection**, **Diesel injector: Removal - Refitting**, page **13B-258**) ,
- the rocker cover (see **11A**, **Top and front of engine**, **Rocker cover: Removal - Refitting**, page **11A-158**) .

II - CAMSHAFT REMOVAL OPERATION

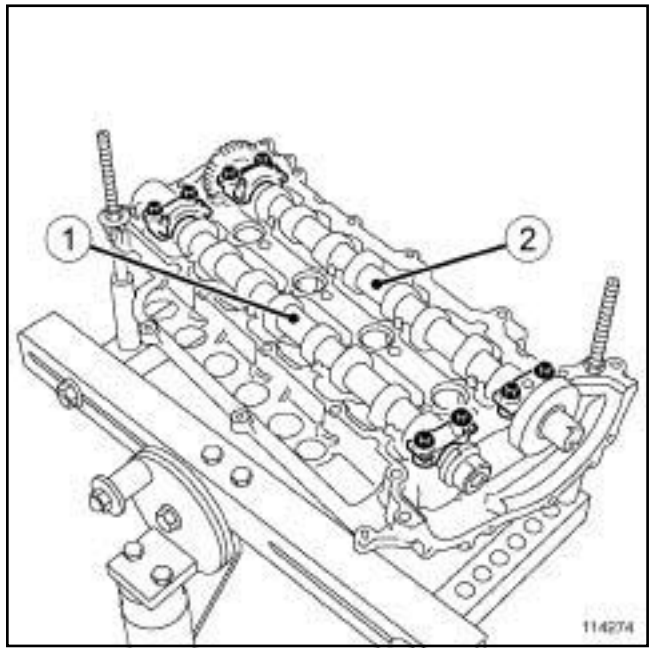

114274

❑ Fit the rocker cover on the **(Mot. 1573)**.

❑ Remove:

- the camshaft bearing cap bolts,
- the camshaft bearing caps,
- the camshaft (**1**) on the inlet side,
- the camshaft (**2**) on the exhaust side.

> Note:
>
> The bearing caps are marked at the factory.

Removal of the high pressure pump drive pinion

❑ Carry out this operation only when replacing the exhaust side camshaft or the high pressure pump drive pinion.

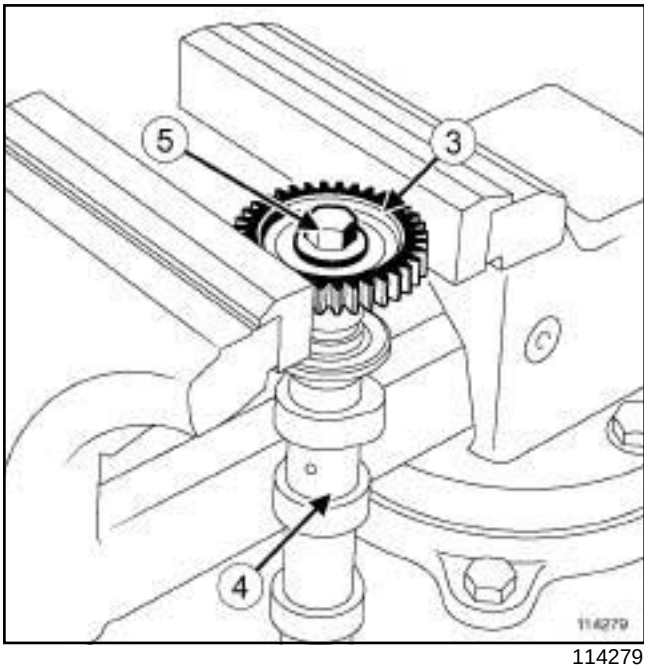

114279

- Immobilise the high pressure pump drive pinion (**3**) using a vice with jaws.
- Remove the bolt (**5**) from the pinion, holding the camshaft (**4**) steady by hand.

REFITTING

I - REFITTING PREPARATION OPERATION

- Clean with **SURFACE CLEANER** (see **Vehicle: Parts and ingredients for the repairwork**) :
  - the camshafts,
  - the camshaft bearing caps,
  - the bearings on the rocker cover.
- Check that the teeth of the high pressure pump drive pinion are not chipped, flaked, or scratched.
- **parts always to be replaced: camshaft timing sprocket bolt (10,02,02,16)**

Refitting the high pressure pump pinion

- Carry out this operation only when replacing the exhaust side camshaft or the high pressure pump drive pinion.
- Immobilise the high pressure pump drive pinion in a vice with jaws.
- Without tightening, fit the new bolt of the pinion whilst holding the camshaft (exhaust side).
- Torque and angle tighten the **high pressure pump drive pinion bolt (40 N.m + 34° ± 6°)**.

M9R

II - CAMSHAFT REFITTING OPERATION

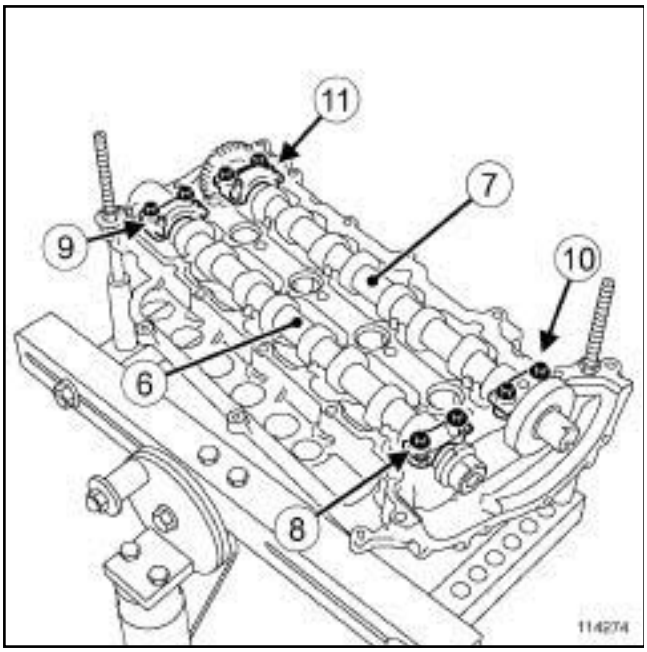

114274

❑ Fit the rocker cover on the **(Mot. 1573)**.

❑ Lubricate the camshaft bearings on the rocker cover with engine oil.

❑ Refit:

- the camshaft, inlet side (**6**) ,
- the camshaft, exhaust side (**7**) .

❑ Lubricate the camshafts around the bearing caps with engine oil.

❑ Refit:

- the camshaft bearing cap (**8**) (part marking: ADM1),
- the camshaft bearing cap (**9**) (part marking: ADM2),
- the camshaft bearing cap (**10**) (part marking: ECH1),
- the camshaft bearing cap (**11**) (part marking: ECH2).

> Note:
>
> Check that the camshaft bearing caps are in contact with the rocker cover before refitting the bolts.

❑ Fit the camshaft bearing cap bolts, without tightening them.

❑ Torque tighten the **camshaft bearing cap bolts (10 N.m)**.

❑ Remove the rocker cover from the **(Mot. 1573)**.

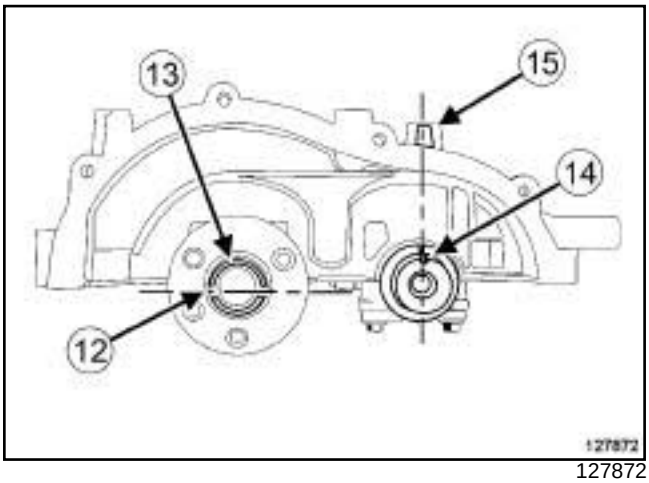

127872

❑ Position:

- the groove (**12**) on the exhaust side camshaft horizontally (large segment (**13**) facing upwards),
- the groove on the inlet side of the camshaft (**14**) facing towards the rocker cover boss (**15**) .

III - FINAL OPERATION

❑ Refit:

- the rocker cover (see **11A**, **Top and front of engine**, **Rocker cover: Removal - Refitting**, page **11A-158**) ,
- the diesel injectors (see **13B**, **Diesel injection**, **Diesel injector: Removal - Refitting**, page **13B-258**) ,
- the high pressure pipes between the rail and the injectors (see **13B**, **Diesel injection**, **High-pressure pipe between the rail and injector: Removal - Refitting**, page **13B-181**) ,
- the diesel return rail (see **13B**, **Diesel injection**, **Diesel injector fuel return rail: Removal - Refitting**, page **13B-148**) ,
- the oil separator (see **11A**, **Top and front of engine**, **Oil decanter: Removal - Refitting**, page **11A-301**) ,
- the high pressure pipe between the pump and the rail (see **13B**, **Diesel injection**, **High-pressure pipe between the pump and rail: Removal - Refitting**, page **13B-160**) ,
- the vacuum pump (see **Vacuum pump: Removal - Refitting**) .

M9R

M9R, and 721 or 722 or 724

- Refit the exhaust gas pressure sensor (see **19B**, **Exhaust**, **Exhaust gas pressure sensor: Removal - Refitting**, page **19B-112**) .

- Refit:
  - the timing sprockets (see **Timing sprocket: Removal - Refitting**) ,
  - the timing chain (see **11A**, **Top and front of engine**, **Timing chain: Removal - Refitting**, page **11A-147**) ,
  - the new crankshaft seal on the timing end (see **10A**, **Engine and cylinder block assembly**, **Crankshaft seal at timing end Removal - Refitting**, page **10A-1**) .
- Fit the flywheel locking tool **(Mot. 1431)** onto the cylinder block.
- Refit the crankshaft accessories pulley (see **11A**, **Top and front of engine**, **Crankshaft accessories pulley: Removal - Refitting**, page **11A-11**) .
- Remove the flywheel locking tool **(Mot. 1431)**.
- Refit:
  - the coolant pump (see **19A**, **Cooling**, **Water pump: Removal - Refitting**, page **19A-29**) ,
  - the new accessories belt (see **11A**, **Top and front of engine**, **Accessories belt: Removal - Refitting**, page **11A-4**) .
- Remove the engine from the component support (see **Engine support equipment: Use**) .
- Refit the engine - gearbox assembly (see **10A**, **Engine and cylinder block assembly**, **Engine/gearbox assembly: Removal - Refitting**, page **10A-97**) .
- Top up the engine oil (see **10A**, **Engine and cylinder block assembly**, **Engine oil: Draining - Refilling**, page **10A-43**) .

F9Q

Tightening torques ▽	
bolts of the camshaft bearing cap cover	**30 N.m**

IMPORTANT
To avoid all risk of damage to the systems, apply the safety and cleanliness instructions and operation recommendations before carrying out any repair (see **Engine: Precautions for repair**) .

REMOVAL

I - REMOVAL PREPARATION OPERATION

❑ Position the vehicle on a two-post lift (see **Vehicle: Towing and lifting**) (02A, Lifting equipment).

❑ Remove:

- the engine cover,
- the vacuum pump (see **Vacuum pump: Removal - Refitting**) (37A, Mechanical component controls),
- the engine undertray bolts,
- the engine undertray,
- the front right-hand wheel (see **Wheel: Removal - Refitting**) (35A, Wheels and tyres),
- the front right-hand wheel arch liner (see **Front wheel arch liner: Removal - Refitting**) (55A, Exterior protection),
- the accessories belt (see **11A**, **Top and front of engine**, **Accessories belt: Removal - Refitting**, page **11A-4**) ,
- the crankshaft accessories pulley (see **11A**, **Top and front of engine**, **Crankshaft accessories pulley: Removal - Refitting**, page **11A-11**) ,
- the lower engine tie-bar (see **19D**, **Engine mounting**, **Lower engine tie-bar: Removal - Refitting**, page **19D-36**) ,
- the camshaft position sensor (see **13B**, **Diesel injection**, **Camshaft position sensor: Removal - Refitting**, page **13B-68**) ,
- the right-hand suspended engine mounting (see **19D**, **Engine mounting**, **Right-hand suspended engine mounting: Removal - Refitting**, page **19D-20**) ,
- the timing belt (see **11A**, **Top and front of engine**, **Timing belt: Removal - Refitting**, page **11A-18**) ,
- the camshaft seal (see **Camshaft seal at timing end: Removal - Refitting**) .

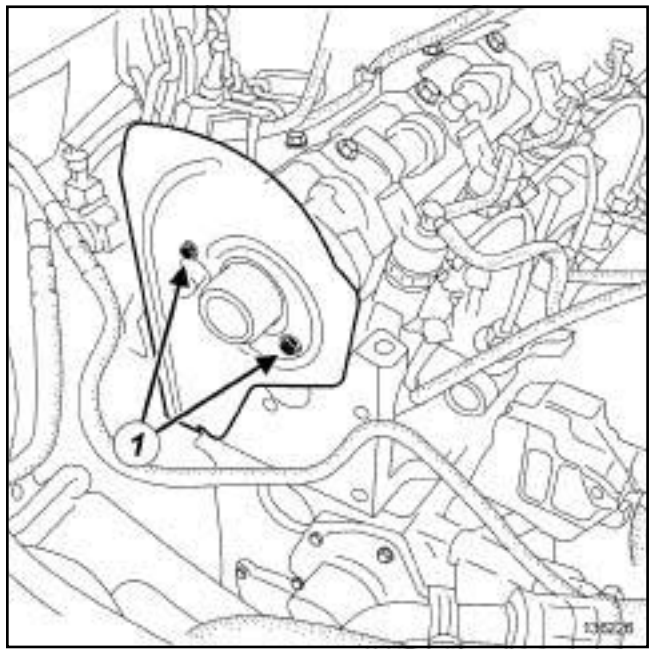

136226

❑ Remove:

- the inner timing cover bolts (**1**) ,
- the inner timing cover,
- the rocker cover (see **11A**, **Top and front of engine**, **Rocker cover: Removal - Refitting**, page **11A-158**) .

F9Q

II - OPERATION FOR REMOVAL OF PART CONCERNED

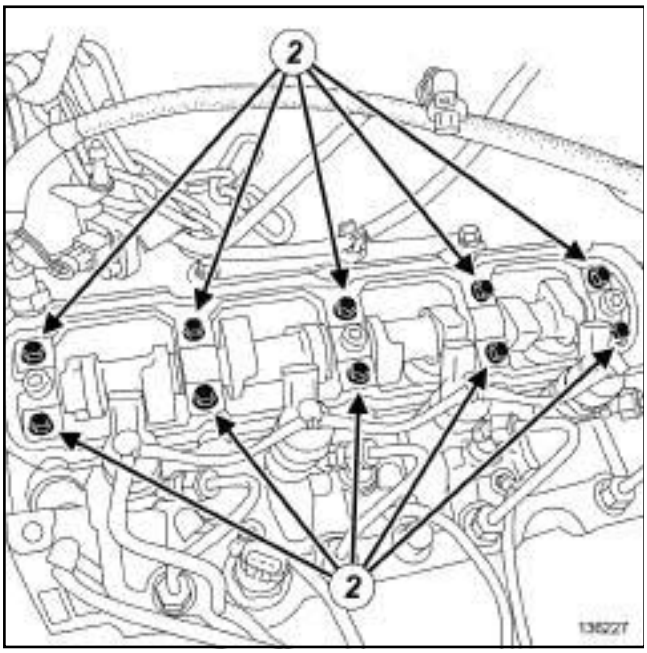

136227

❑ Remove:

- the bolts (**2**) of the camshaft bearing cap cover,
- the camshaft bearing cap cover.

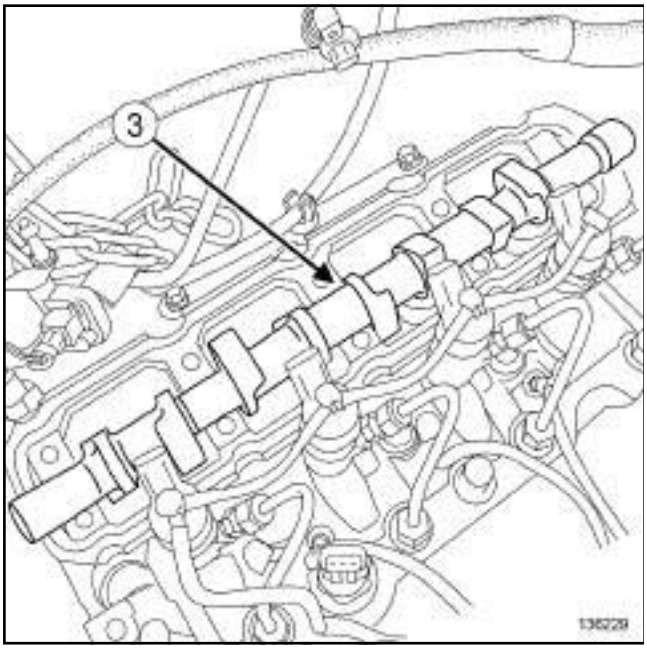

136229

❑ Remove the camshaft (**3**) .

REFITTING

I - REFITTING PREPARATION OPERATION

❑

> **WARNING**
> Do not scrape the joint faces of the aluminium, any damage caused to the joint face will result in a risk of leaks.

> **WARNING**
> To ensure proper sealing, the gasket surfaces must be clean, dry and not greasy (avoid any finger marks).

❑ Use **SUPER CLEANING AGENT FOR JOINT FACES** (see **Vehicle: Parts and ingredients for the repairwork**) (04B, Consumables - Products) to clean:

- the joint face of the camshaft bearing cap cover,
- the cylinder head joint face.

❑ Use **SURFACE CLEANER** (see **Vehicle: Parts and ingredients for the repairwork**) (04B, Consumables - Products) to degrease:

- the joint face of the camshaft bearing cap cover,
- the cylinder head joint face.

❑ **parts always to be replaced: Camshaft seal on timing end (10,02,02,02)**.

parts always to be replaced: camshaft timing sprocket bolt (10,02,02,16).

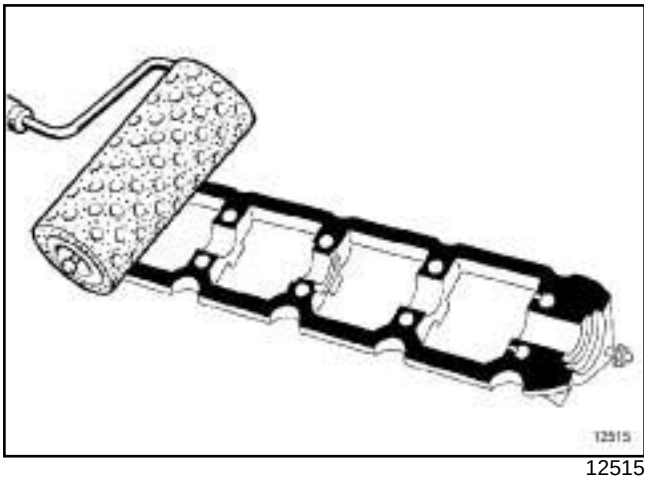

12515

❑

WARNING

Applying excess sealant could cause it to be squeezed out when parts are tightened. A mixture of sealant and fluid could damage certain components (engine, radiator, etc.).

❑ Apply **RESIN ADHESIVE** (see **Vehicle: Parts and ingredients for the repairwork**) (04B, Consumables - Products) using a stipple roller on the joint face of the camshaft bearing cap cover until the joint face is completely coated.

❑ Use a cloth to remove any **RESIN ADHESIVE** in the camshaft bearing caps.

II - REFITTING OPERATION FOR PART CONCERNED

❑ Refit the camshaft.

❑ Apply a drop of **FRENETANCHE** (see **Vehicle: Parts and ingredients for the repairwork**) (04B, Consumables - Products) on the bolts of the camshaft bearing cap cover.

❑ Refit the camshaft bearing cap cover.

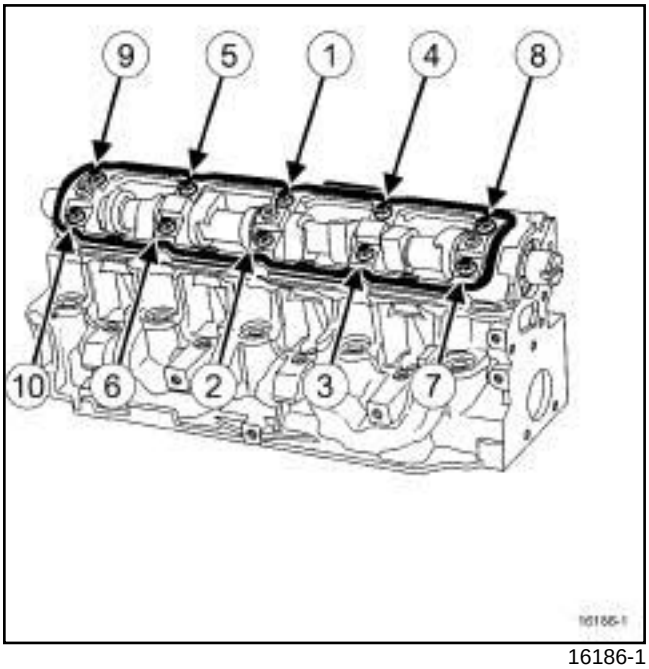

16186-1

❑ Torque tighten in order the **bolts of the camshaft bearing cap cover (30 N.m)**.

III - FINAL OPERATION

❑ Refit:

- the rocker cover (see **11A**, **Top and front of engine**, **Rocker cover: Removal - Refitting**, page **11A-158**) ,
- the inner timing cover,
- a new camshaft seal on the timing end (see **Camshaft seal at timing end: Removal - Refitting**) .
- the timing belt (see **11A**, **Top and front of engine**, **Timing belt: Removal - Refitting**, page **11A-18**) ,
- the right-hand suspended engine mounting (see **19D**, **Engine mounting**, **Right-hand suspended engine mounting: Removal - Refitting**, page **19D-20**) ,
- the camshaft position sensor (see **13B**, **Diesel injection**, **Camshaft position sensor: Removal - Refitting**, page **13B-68**) ,
- the lower engine tie-bar (see **19D**, **Engine mounting**, **Lower engine tie-bar: Removal - Refitting**, page **19D-36**) ,
- the crankshaft accessories pulley (see **11A**, **Top and front of engine**, **Crankshaft accessories pulley: Removal - Refitting**, page **11A-11**) ,
- the accessories belt (see **11A**, **Top and front of engine**, **Accessories belt: Removal - Refitting**, page **11A-4**) ,

- the front right-hand wheel arch liner (see **Front wheel arch liner: Removal - Refitting**) (55A, Exterior protection),
- the front right-hand wheel (see **Wheel: Removal - Refitting**) (35A, Wheels and tyres),
- the engine undertray,
- the vacuum pump (see **Vacuum pump: Removal - Refitting**) (37A, Mechanical component controls),
- the engine cover.

F4R, and 774 or 776

REMOVAL

I - REMOVAL PREPARATION OPERATION

❑ Position the vehicle on a two-post lift (see **Vehicle: Towing and lifting**) (02A, Lifting equipment).

❑ Remove:

- the engine covers,
- the battery (see **Battery: Removal - Refitting**) (80A, Battery),
- the air filter unit (see **12A**, **Fuel mixture**, **Air filter unit: Removal - Refitting**, page **12A-11**) ,
- the front right-hand wheel (see **Wheel: Removal - Refitting**) (35A, Wheels and tyres),
- the front right-hand wheel arch liner (see **Front wheel arch liner: Removal - Refitting**) (55A, Exterior protection),
- the throttle valve (see **12A**, **Fuel mixture**, **Throttle valve: Removal - Refitting**, page **12A-40**) ,
- the inlet distributor (see **12A**, **Fuel mixture**, **Inlet manifold: Removal - Refitting**, page **12A-49**) ,
- the accessories belt (see **11A**, **Top and front of engine**, **Accessories belt: Removal - Refitting**, page **11A-4**) ,
- the timing belt (see **11A**, **Top and front of engine**, **Timing belt: Removal - Refitting**, page **11A-18**) ,
- the coils (see **17A**, **Ignition**, **Coils Removal - Refitting**, page **17A-1**) ,
- the oil separator (see **11A**, **Top and front of engine**, **Oil decanter: Removal - Refitting**, page **11A-301**) ,
- the rocker cover (see **11A**, **Top and front of engine**, **Rocker cover: Removal - Refitting**, page **11A-158**) .

II - OPERATION FOR REMOVAL OF PART CONCERNED

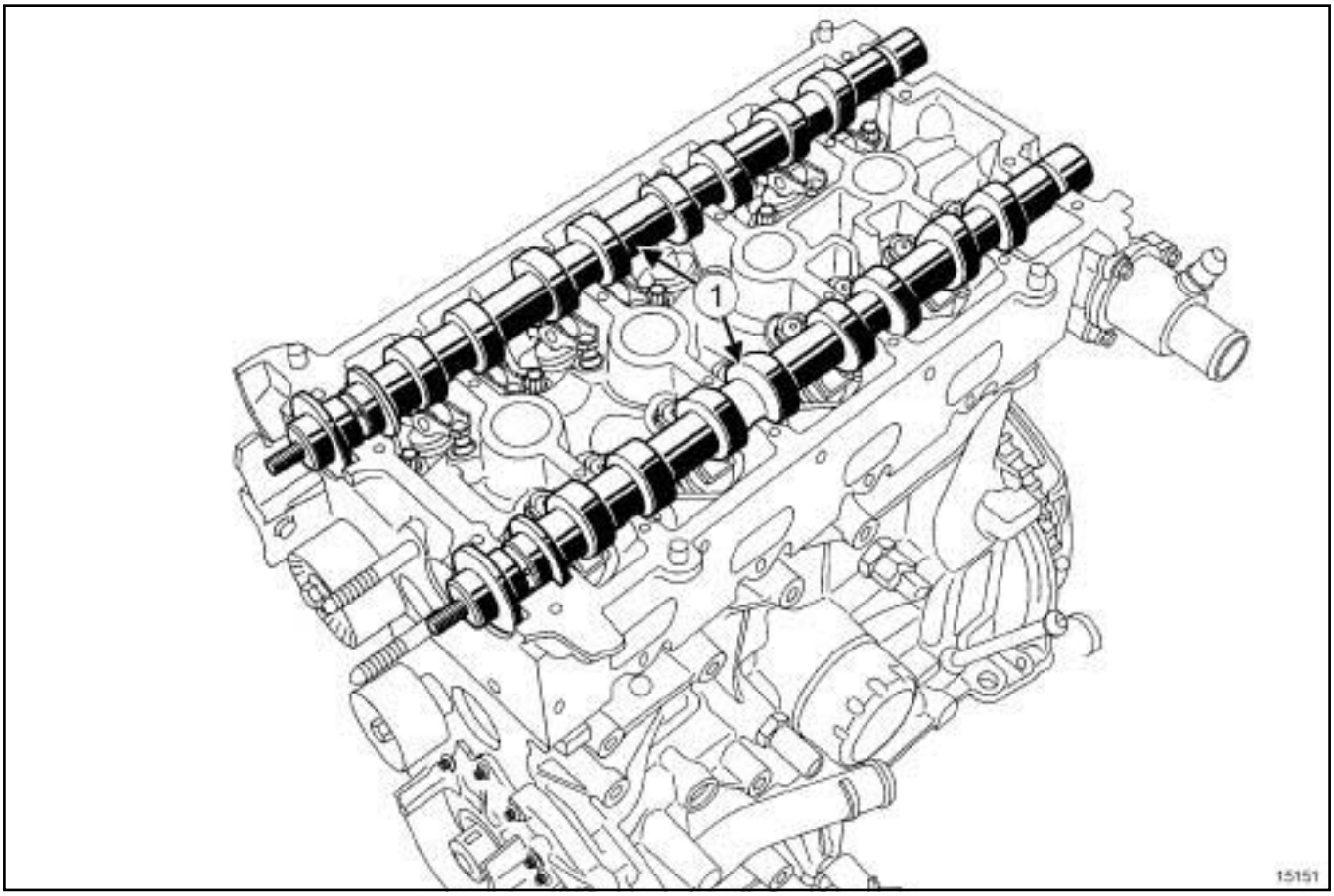

15151

❑ Remove the camshafts (**1**) .

F4R, and 774 or 776

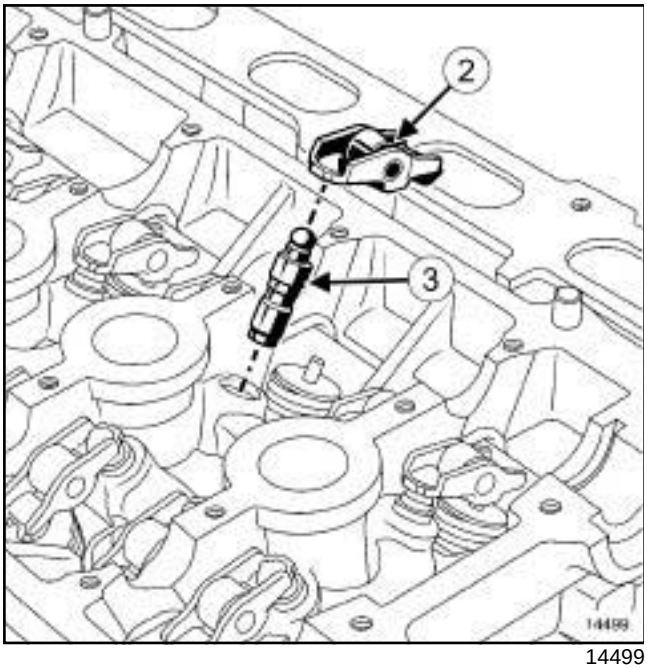

14499

❑ Remove:

- the valve rockers (**2**) ,
- the hydraulic tappets (**3**) .

Note:

To prevent any risk of unpriming the hydraulic tappets make sure that they are vertical.

F4R, and 774 or 776

REFITTING

I - REFITTING PREPARATION OPERATION

Camshaft marking

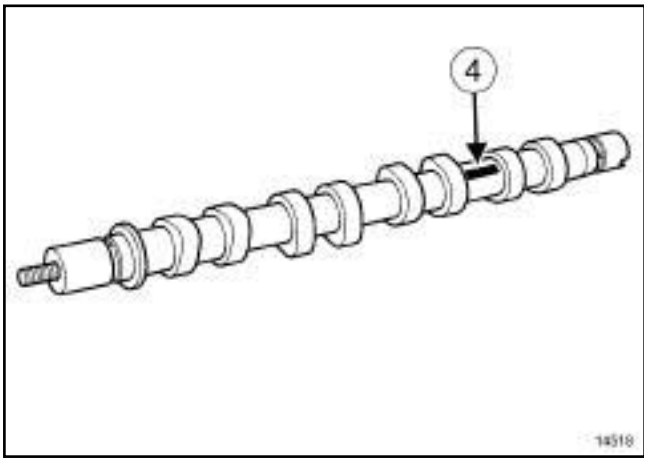

14518

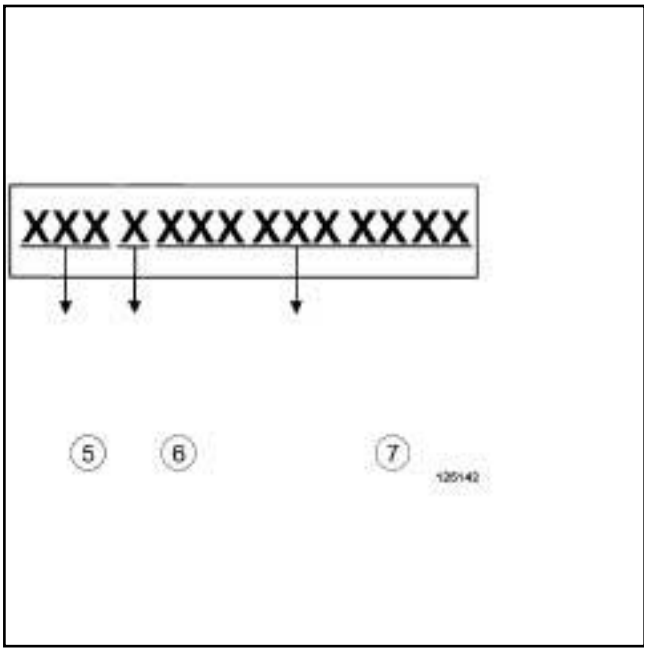

125579

❑ The camshafts can be identified by a marking at (**4**) :

- the mark (**5**) corresponds to the engine type,
- the mark (**6**) serves to distinguish the inlet camshaft from the exhaust camshaft:
- A: Inlet
- E: Exhaust
- The mark (**7**) is for the supplier's use only.

Note:

If the exhaust camshaft stud is loosened (see **11A**, **Top and front of engine**, **Camshaft: Removal - Refitting**, page **11A-172**) (Technical Note 3884A, Replacing F4 camshaft pulley studs).

Note:

It is essential to reprime the hydraulic tappets as these may become drained if removed for a long time.

❑ To check if repriming is necessary, press the top of the tappet with your thumb. If the tappet piston depresses, immerse the tappets in a container full of diesel then reprime them.

II - REFITTING OPERATION FOR PART CONCERNED

❑ Refit:

- the hydraulic tappets,
- the valve rockers,
- the inlet camshaft, by lubricating the inlet camshaft bearings,
- the exhaust camshaft, by lubricating the exhaust camshaft bearings.

III - FINAL OPERATION

❑ Refit:

- the rocker cover (see **11A**, **Top and front of engine**, **Rocker cover: Removal - Refitting**, page **11A-158**) ,
- the oil separator (see **11A**, **Top and front of engine**, **Oil decanter: Removal - Refitting**, page **11A-301**) ,
- the coils (see **17A**, **Ignition**, **Coils Removal - Refitting**, page **17A-1**) ,
- the timing belt (see **11A**, **Top and front of engine**, **Timing belt: Removal - Refitting**, page **11A-18**) ,
- the accessories belt (see **11A**, **Top and front of engine**, **Accessories belt: Removal - Refitting**, page **11A-4**) ,
- the inlet distributor (see **12A**, **Fuel mixture**, **Inlet manifold: Removal - Refitting**, page **12A-49**) ,
- the throttle valve (see **12A**, **Fuel mixture**, **Throttle valve: Removal - Refitting**, page **12A-40**) ,

F4R, and 774 or 776

- the front right-hand wheel arch liner (see **Front wheel arch liner: Removal - Refitting**) (55A, Exterior protection),
- the front right-hand wheel (see **Wheel: Removal - Refitting**) (35A, Wheels and tyres),
- the air filter unit (see **12A**, **Fuel mixture**, **Air filter unit: Removal - Refitting**, page **12A-11**) ,
- the battery (see **Battery : Removal - Refitting**) (80A, Battery),
- the engine covers.

B84 or C84 or E84 or K84 or L84, and F4R

REMOVAL

❑ Remove the « engine and gearbox » assembly (see **10A**, **Engine and cylinder block assembly**, **Engine/gearbox assembly: Removal - Refitting**, page **10A-97**) .

> Note:
>
> Removal and refitting of the turbocharger requires careful application of the repair procedures to ensure that the system is sealed correctly. Failure to comply with these instructions may have serious safety-related consequences for the driver.

❑ Remove the cylinder head (see **Cylinder head: Removal - Refitting**) (Technical Note 6027A, 10A, Engine and peripherals).

REFITTING

❑ Refit the cylinder head (see **Cylinder head: Removal - Refitting**) (Technical Note 6027A, 10A, Engine and peripherals).

❑ Refit the « engine and gearbox» assembly (see **10A**, **Engine and cylinder block assembly**, **Engine/gearbox assembly: Removal - Refitting**, page **10A-97**) .

B84 or C84 or E84 or K84 or L84, and K4M, and 764 or 768 or 788 or 856 – B84 or C84 or E84 or K84 or L84, and K4J

Essential special tooling	
Mot. 1672	Lower engine support.
Mot. 1453	Multiple-adjusting engine mounting support with retaining straps.
Mot. 1453-01	Additional winder nut on engine lift support Mot. 1453.
Mot. 1490-01	Locking and adjusting camshaft pulleys.
Mot. 1573	Cylinder head support
Mot. 104	Cylinder head aligning tool
Ele. 1382	Set of plug wrenches 16 & 21 mm torque 17.5 & 28 N.m + square adapter 9-9.52 for wrench Ele. 1086
Mot. 1491	Camshaft oil seal fitting tool.
Mot. 1632	Tool for fitting PTFE camshaft seal
Mot. 1487	Tool for removing the camshaft covers (57 mm diameter).
Mot. 1488	Tool for removing the camshaft covers (43 mm diameter).

Essential equipment
cylinder head testing tool

Tightening torques ▽	
cylinder head bolts	**20 Nm**
cylinder head bolts	**240° ± 6°**
rocker cover bolts 22, 23, 20 and 13	**8 Nm**
rocker cover bolts 1 to 12, 14 to 19, 21 to 24	**12 Nm**
rocker cover bolts 22, 23, 20 and 13	**12 Nm**
(new) oil decanter bolts in the untapped housing	**15 Nm**

Tightening torques ▽	
(new or original) oil decanter bolts in the tapped housing	**10 Nm**
spark plugs	**25 to 30 Nm**
coil bolts (if holes already tapped)	**12 Nm**
coil bolts (if holes not tapped)	**15 Nm**
intake distributor bolts	**9 Nm**

REMOVAL

❑ Position the vehicle on a two-post lift (see **Vehicle: Towing and lifting**) (MR 364, 02A, Lifting equipment).

❑ Remove:

- the battery (see **Battery: Removal - Refitting**) (MR 364, 80A, Battery),
- the engine covers,
- the engine undertray,
- the accessories belt (see **11A**, **Top and front of engine**, **Accessories belt: Removal - Refitting**, page **11A-4**) ,
- the timing belt (see **11A**, **Top and front of engine**, **Timing belt: Removal - Refitting**, page **11A-18**) ,
- the front bumper (see **Front bumper: Removal - Refitting**) (MR 365, 55A, Exterior protection).

❑ Drain the engine cooling system (see **19A**, **Cooling**, **Cooling circuit: Draining - Refilling**, page **19A-15**) .

B84 or C84 or E84 or K84 or L84, and K4M, and 764 or 768 or 788 or 856 – B84 or C84 or E84 or K84 or L84, and K4J

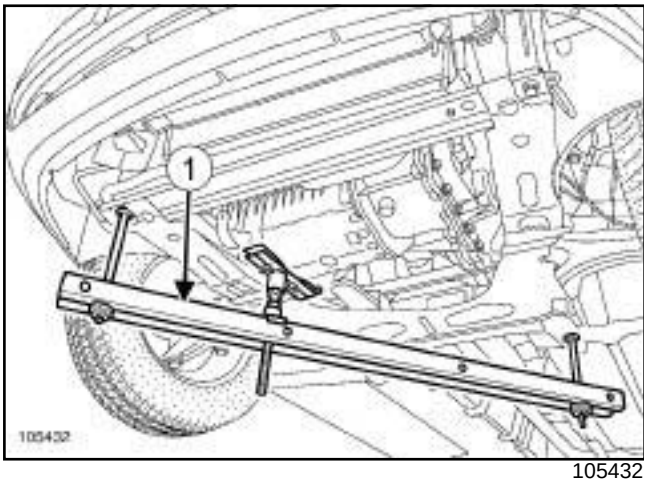

105432

❑ Fit the engine mounting **(Mot. 1672)**.

❑ Remove the **(Mot. 1453)** then the **(Mot. 1453-01)**.

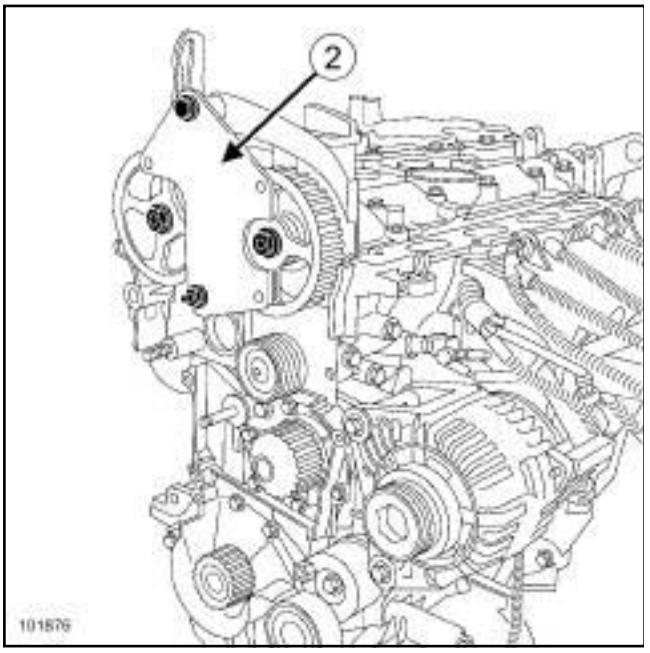

101876

❑ Remove the camshaft pulleys using the camshaft pulley locking tool (**2**) **(Mot. 1490-01)**.

❑ If the camshaft sprocket stud loosens with the nut, if necessary see (**Camshaft)** (Technical Note 3887A, 11A, Top and front of engine).

> Note:
>
> Be careful of petrol splashing out when disconnecting the fuel supply union.

❑ Remove:

- the injection rail protector,
- the fuel supply pipe from the injection rail.

❑ Move the fuel supply pipe aside.

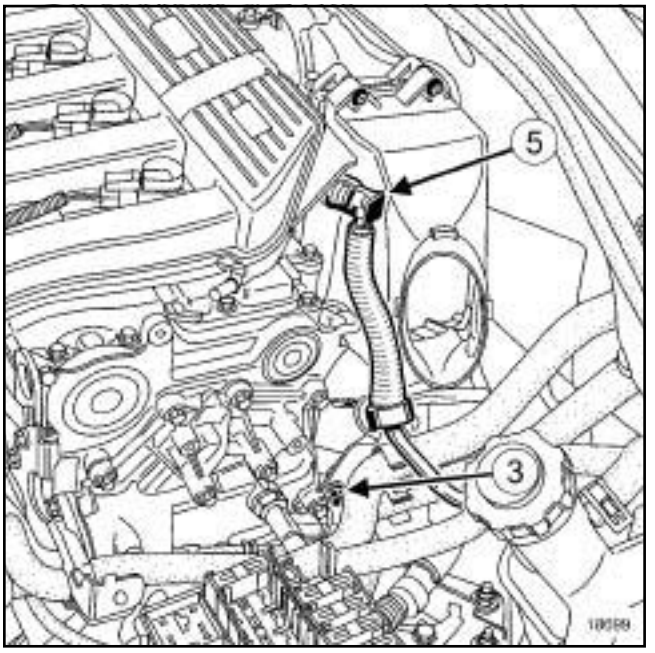

18699

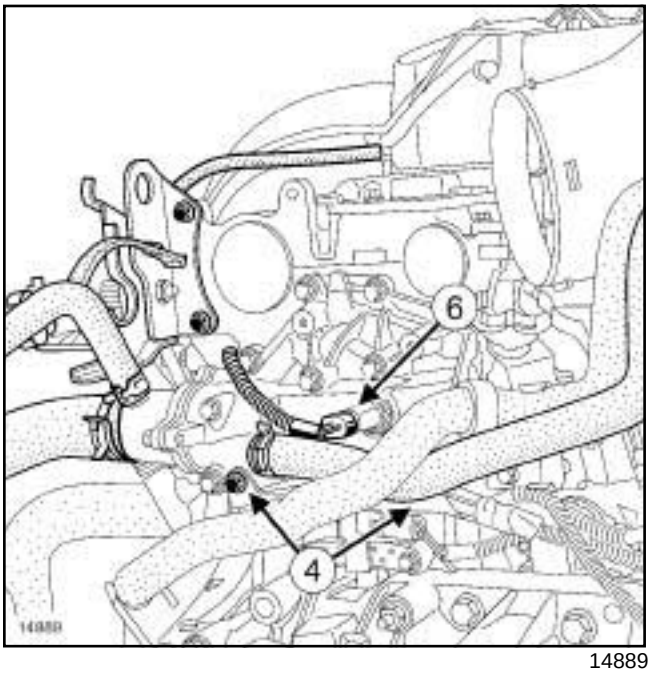

14889

❑ Remove the bracket bolt (**3**) .

❑ Move the bracket to one side.

❑ Remove the electric wiring harness bracket bolt (**4**) .

❑ Disconnect:

- the brake servo vacuum pipe (**5**) from the intake distributor,
- the coolant temperature sensor connector (**6**) ,
- the water chamber hoses.

B84 or C84 or E84 or K84 or L84, and K4M, and 764 or 768 or 788 or 856 – B84 or C84 or E84 or K84 or L84, and K4J

❑ Move the bracket/wiring harness assembly aside.

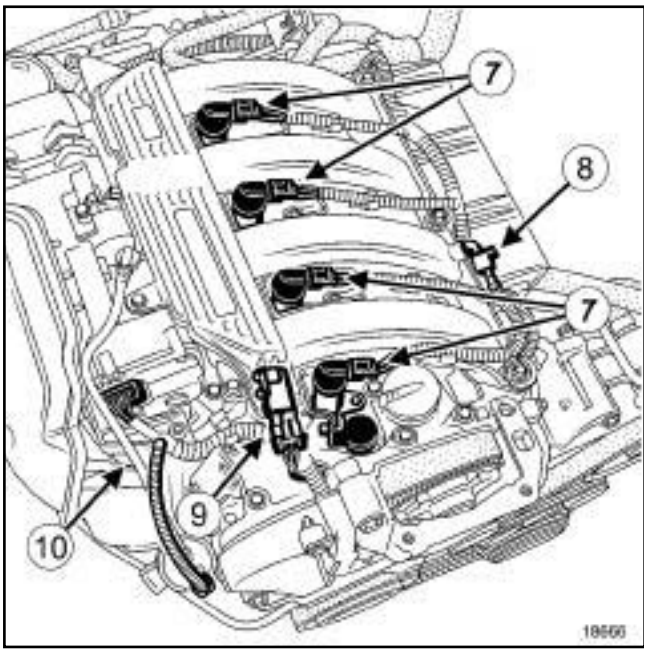

18666

❑ Disconnect:

- the ignition coil connectors (**7**) ,
- the connector (**8**) from the air temperature sensor,
- the intake distributor pressure sensor connector (**9**) ,
- the fuel vapour recirculation solenoid valve pipe (**10**) ,
- the catalytic converter upstream oxygen sensor connector.

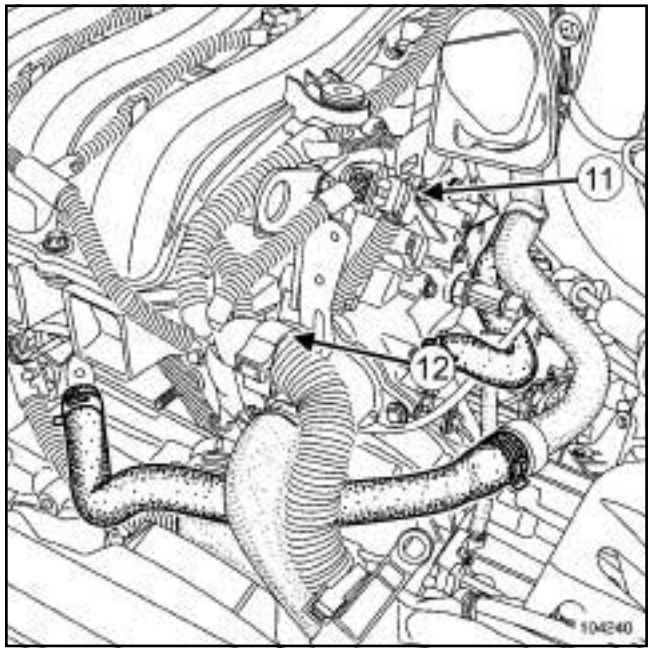

104240

❑ Disconnect the injector connector (**11**) .

❑ Unfasten clip (**12**) .

❑ Move the wiring harness to one side.

❑ Remove:

- the ignition coils,
- the plugs,
- the air filter box (see **12A**, **Fuel mixture**, **Air filter unit: Removal - Refitting**, page **12A-11**) ,
- the throttle valve (see **12A**, **Fuel mixture**, **Throttle valve: Removal - Refitting**, page **12A-40**) .

B84 or C84 or E84 or K84 or L84, and K4M, and 764 or 768 or 788 or 856 – B84 or C84 or E84 or K84 or L84, and K4J

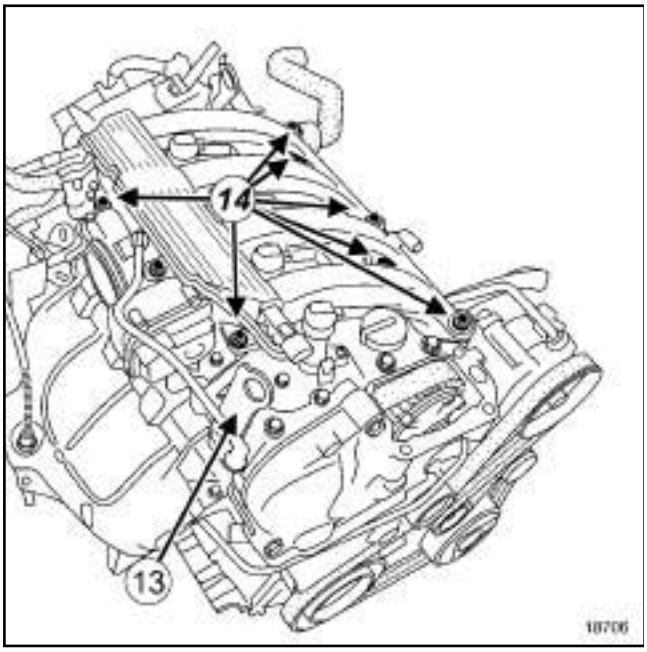

18706

❑ Remove:

- the lifting bracket (**13**) ,
- the intake distributor bolts (**14**) ,
- the intake distributor.

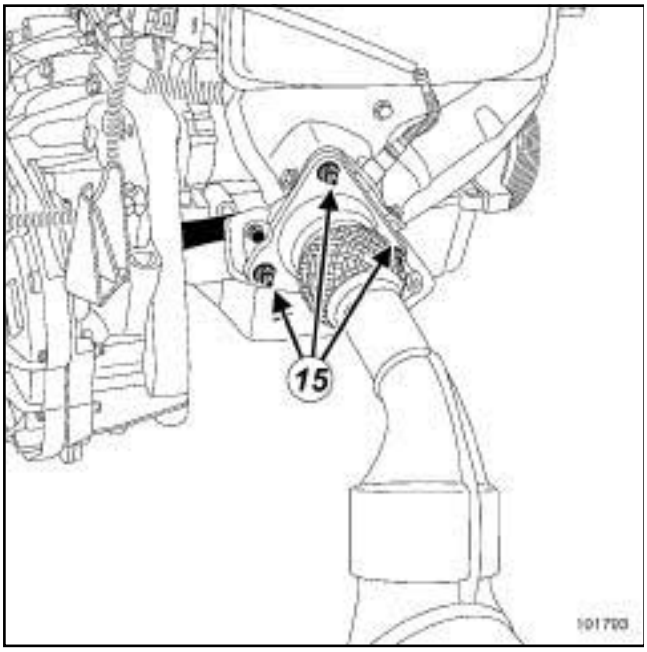

101793

❑ Remove:

- the gearbox - catalytic converter stay bolts,
- the catalytic converter/gearbox stay,
- the nuts (**15**) from the exhaust pipe.

❑ Move the exhaust pipe aside.

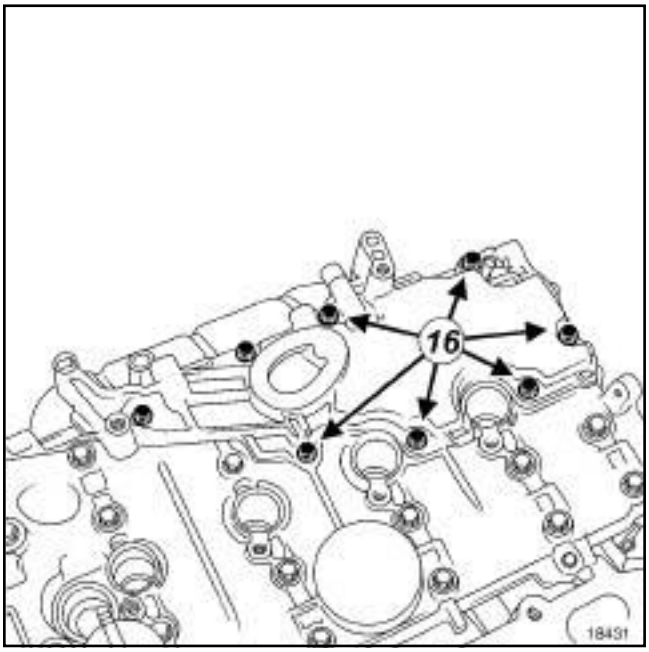

18431

❑ Remove:

- the bolts (**16**) from the oil decanter,
- the oil separator.

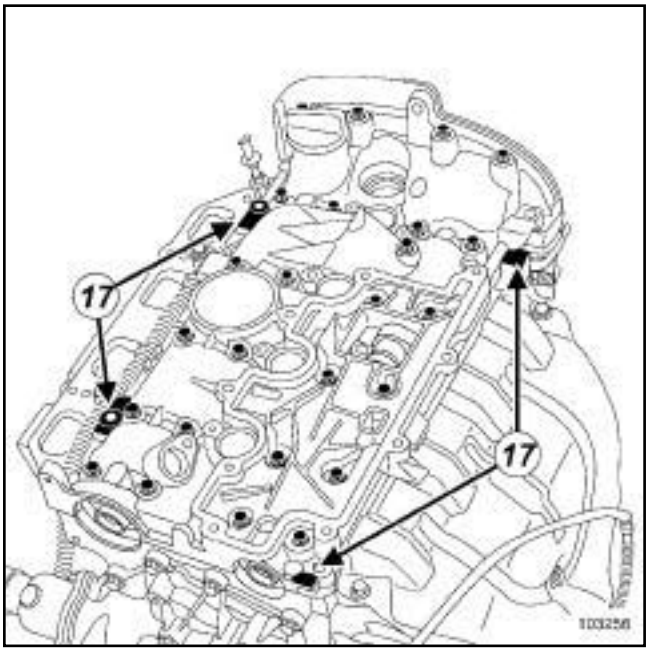

103256

❑ Remove the rocker cover bolts.

❑ Remove the rocker cover vertically by tapping the lugs (**17**) with a copper hammer.

Note:

Do not damage the aluminium surfaces.

B84 or C84 or E84 or K84 or L84, and K4M, and 764 or 768 or 788 or 856 – B84 or C84 or E84 or K84 or L84, and K4J

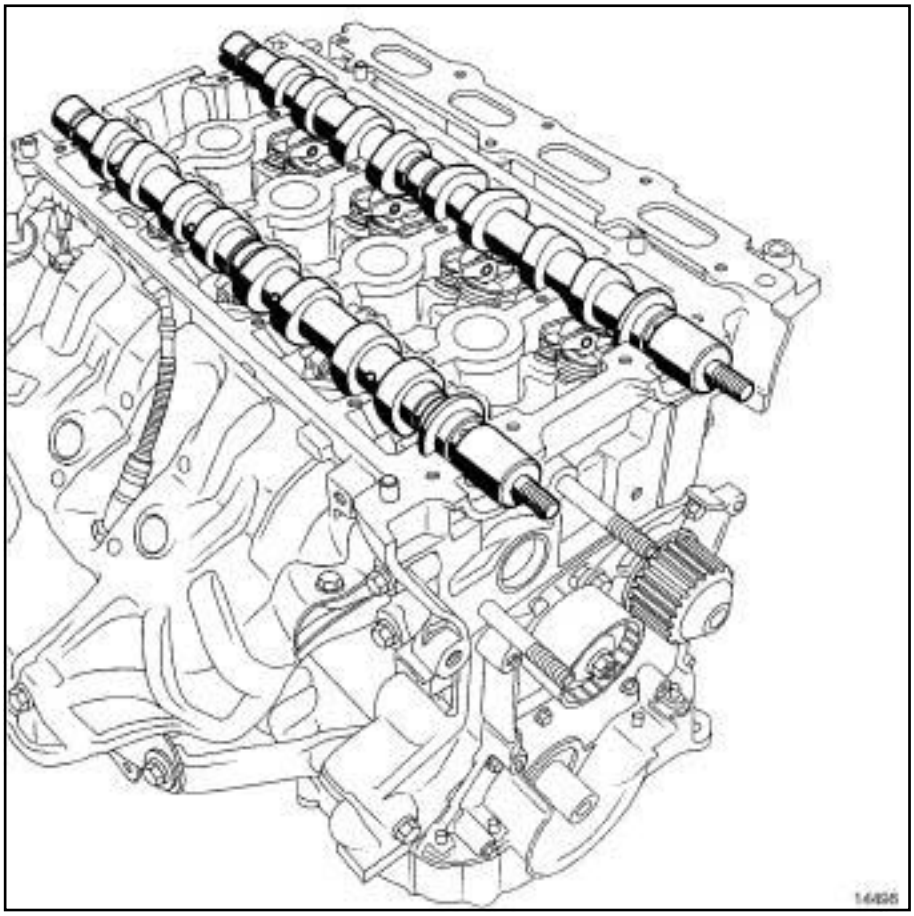

14498

❑ Remove the inlet and exhaust camshafts.

B84 or C84 or E84 or K84 or L84, and K4M, and 764 or 768 or 788 or 856 – B84 or C84 or E84 or K84 or L84, and K4J

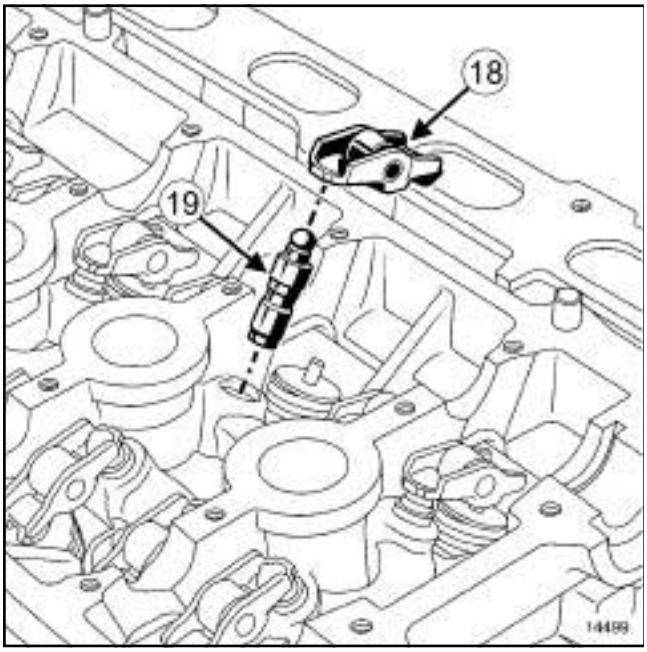

14499

❑ Remove:

- the valve rockers (**18**) ,
- the hydraulic tappets (**19**) .

> Note:
>
> To prevent any risk of unpriming the hydraulic tappets make sure that they are vertical.

❑ Remove:

- the cylinder head bolts,
- the cylinder head.

❑ Mount the cylinder head on the cylinder head support **(Mot. 1573)**.

❑ Remove the cylinder head gasket from the cylinder block.

I - CLEANING THE CYLINDER HEAD

❑

> **IMPORTANT**
>
> Wear latex gloves during the operation.

> **IMPORTANT**
>
> Wear goggles with side protectors for this operation.

> **WARNING**
>
> Do not scratch the aluminium joint faces: any surface damage to the joint faces may cause leaks.

❑ Clean the joint faces with **SUPER CLEANER FOR JOINT FACES** (see **Vehicle: Parts and ingredients for the repairwork**) (MR 364, 04B, Consumables - Products) to dissolve any part of the seal still remaining on the sump and cylinder block.

❑ Apply the product to the section to be cleaned; Wait approximately ten minutes, then remove the residue using a wooden spatula.

> **WARNING**
>
> Do not allow this product to drip onto the paintwork.
>
> Clean the cylinder head carefully to prevent foreign bodies from entering the oil supply and return galleries.
>
> Failure to follow this advice could lead to the blocking of the various oil inlet galleries, which would quickly result in engine damage.

II - CHECKING THE GASKET FACE

❑ Use a ruler and set of feeler gauges to check that there is no gasket face bow.

Maximum distortion: **0.05 mm**

> **WARNING**
>
> No regrinding of the cylinder head is permitted.

❑ Test the cylinder head to detect any possible cracks using **cylinder head testing tool**.

❑ For the procedure for stripping down the cylinder head (see **Cylinder head: stripping - rebuilding** (Technical Note 6023A, 10A, Engine and peripherals).

B84 or C84 or E84 or K84 or L84, and K4M, and 764 or 768 or 788 or 856 – B84 or C84 or E84 or K84 or L84, and K4J

- Position the pistons at mid-stroke to prevent any contact with the valves when refitting the camshafts.
- It is imperative to degrease:
  - the cylinder head combustion face,
  - the cylinder block combustion face.

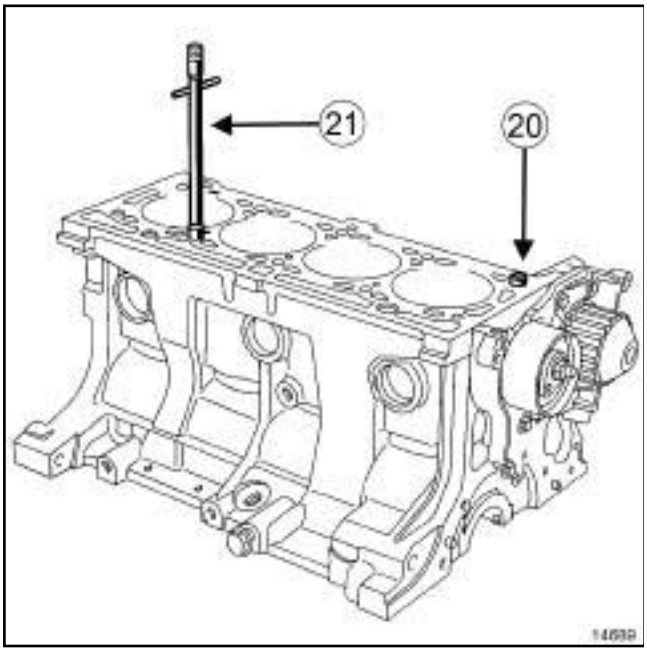

14689

- Check that the centring dowel (**20**) is on the cylinder block.
- Set up the **(Mot. 104)** (**21**) on the cylinder block.

REFITTING

- Fit the new cylinder head gasket.
- Refit the cylinder head.

WARNING
In order to ensure that the bolts are correctly tightened, use a syringe to remove any oil which may be in the cylinder head holes.

WARNING
Do not oil the new bolts. The bolts must be oiled if reused.

B84 or C84 or E84 or K84 or L84, and K4M, and 764 or 768 or 788 or 856 – B84 or C84 or E84 or K84 or L84, and K4J

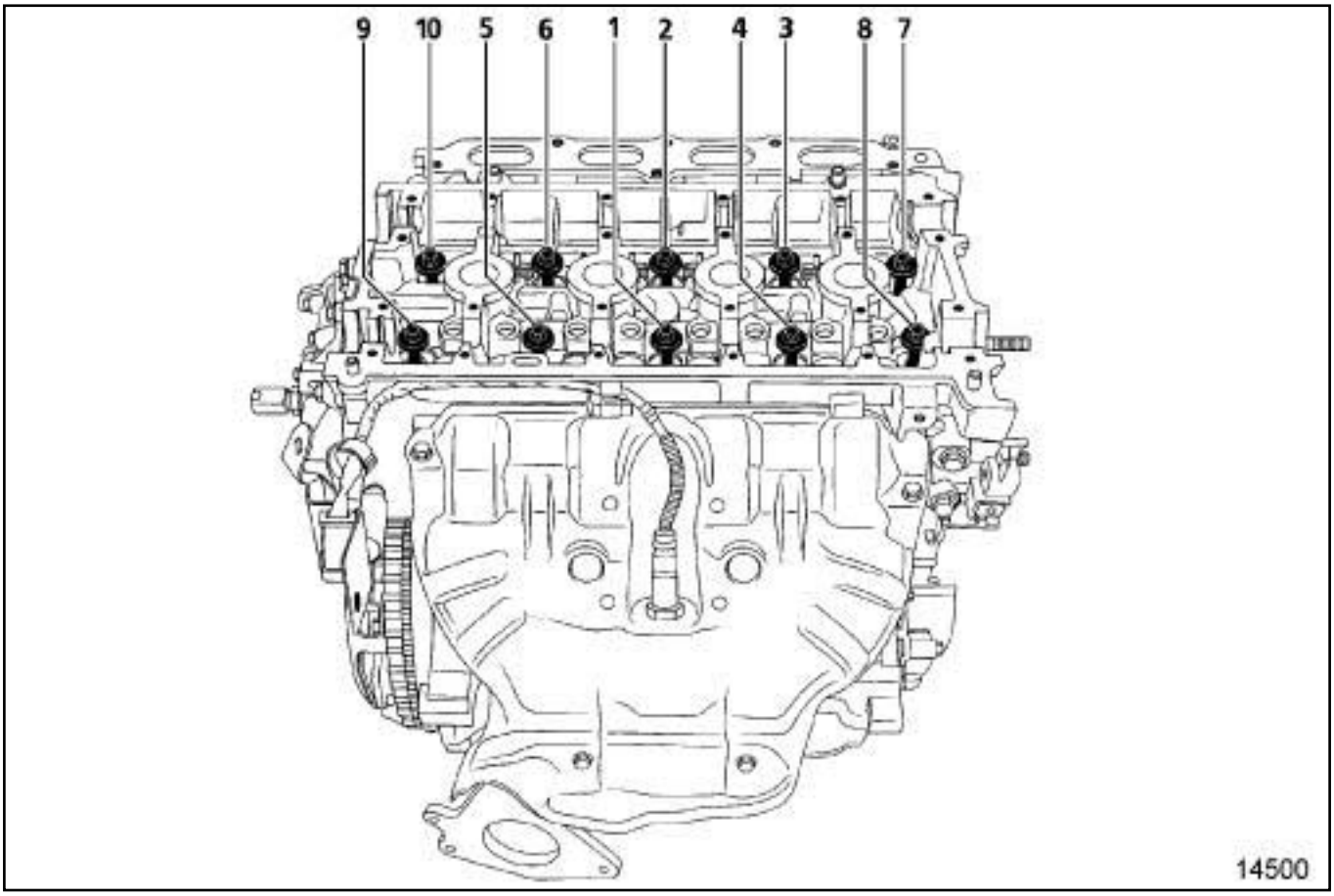

14500

❑

WARNING
The joint faces must be clean, dry and free from grease (avoid finger marks).

❑ Tighten to torque and in order the **cylinder head bolts (20 Nm)**.

❑ Check that all of the cylinder head bolts are tightened to the correct torque **(20 Nm)**.

❑ Angle tighten in order the **cylinder head bolts (240° ± 6°)**.

WARNING
Do not retighten the cylinder head bolts after applying this procedure.

B84 or C84 or E84 or K84 or L84, and K4M, and 764 or 768 or 788 or 856 – B84 or C84 or E84 or K84 or L84, and K4J

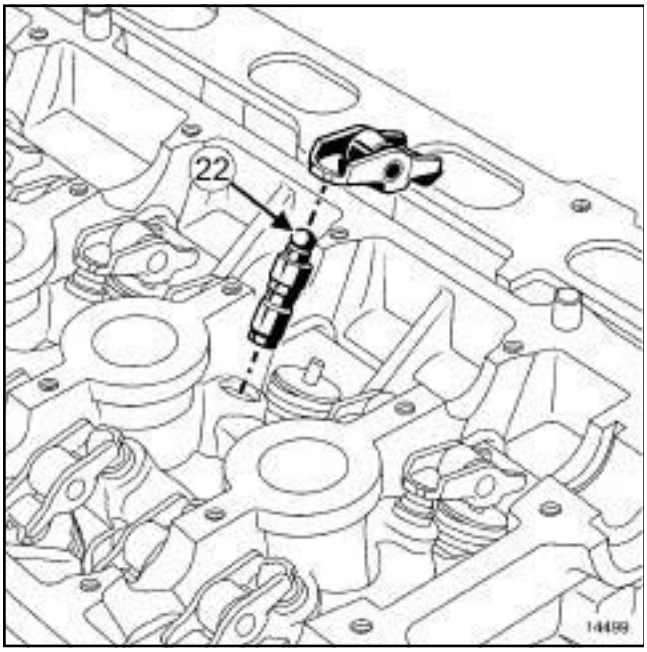

14499

❑ Reprime the hydraulic tappets (hydraulic tappets may empty after a long down time).

To check if repriming is necessary, press the top of the tappet (**22**) with your thumb.

If the tappet piston depresses:

- immerse the tappets in a container of diesel fuel,
- refit the hydraulic tappets.

❑ Refit:

- the valve rockers,
- the camshafts, oiling the bearings.

I - CAMSHAFT MARKING

IDENTIFICATION OF THE CAMSHAFTS

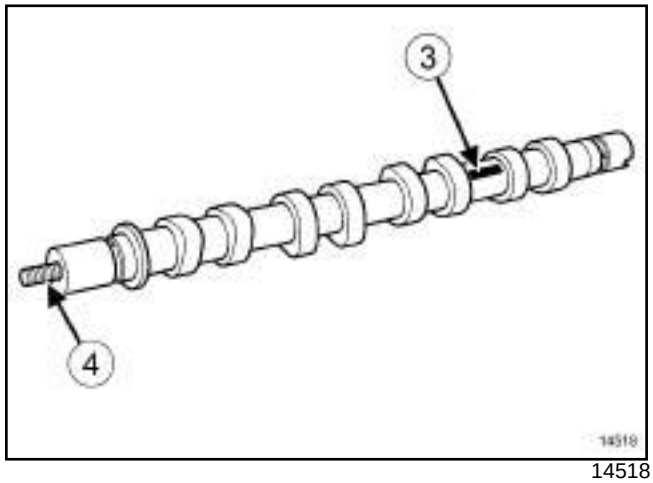

14518

❑ The camshaft can be identified by an etching (**3**) .

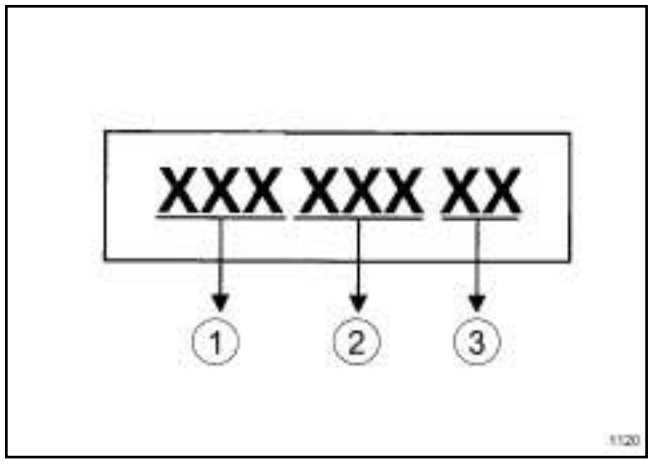

1120

❑ Marks (**1**) and (**2**) are for the supplier's use only.

❑ Mark (**3**) identifies the camshafts:

- AM = Inlet,
- EM = Exhaust.

❑ The camshaft dowel ***(4)*** must be replaced if the dowel loosens with the nut (see **Camshaft**) (Technical Note 3887A, 11A, Top and front of engine).

B84 or C84 or E84 or K84 or L84, and K4M, and 764 or 768 or 788 or 856 – B84 or C84 or E84 or K84 or L84, and K4J

Inlet camshaft:

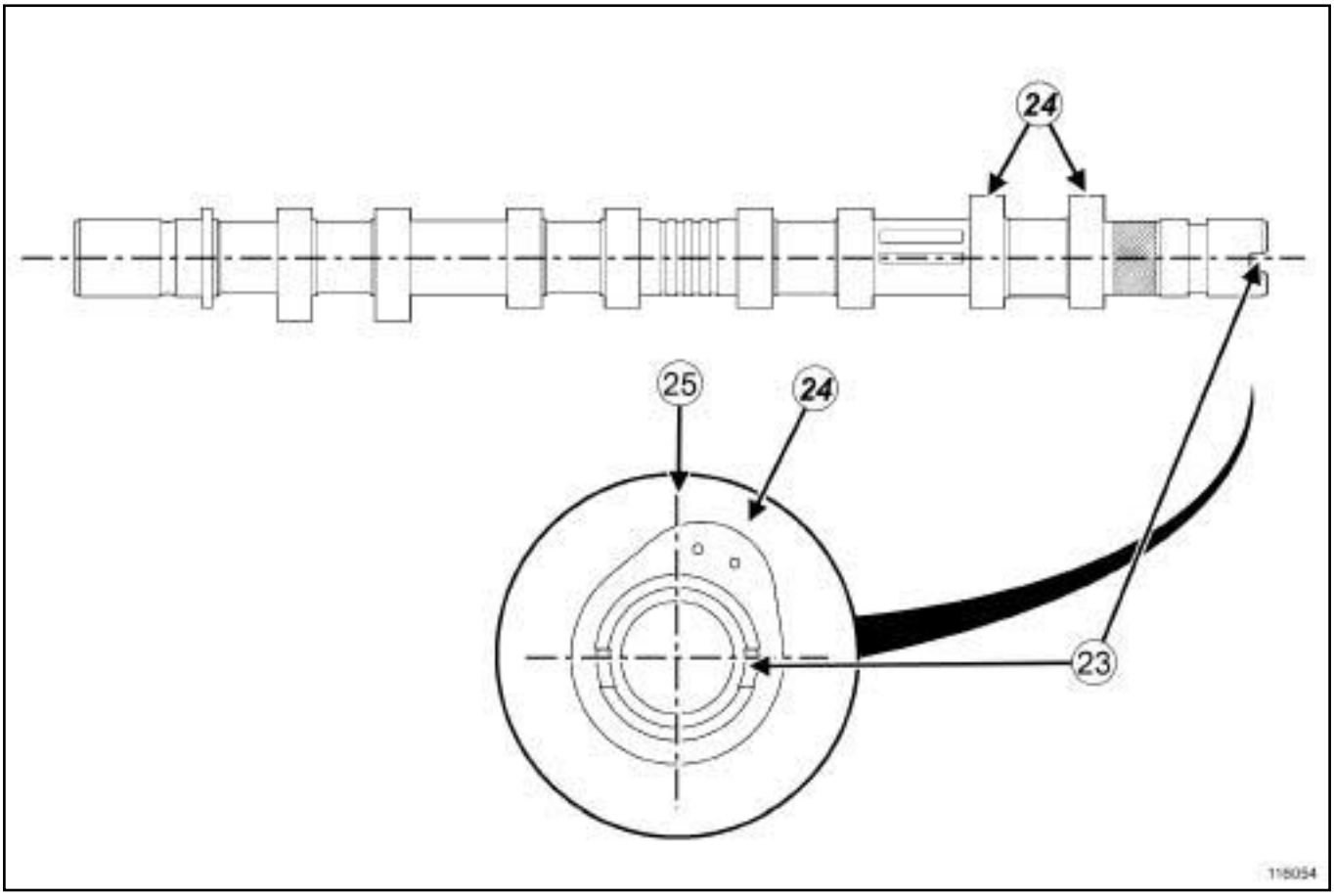

116054

- Position the groove (**23**) horizontally in the end of the camshaft (groove below the centre line of the camshaft).

  The cams (**24**) for cylinder no. 1 must be located to the right of the vertical axis (**25**) , flywheel end view.

B84 or C84 or E84 or K84 or L84, and K4M, and 764 or 768 or 788 or 856 – B84 or C84 or E84 or K84 or L84, and K4J

Outlet camshaft:

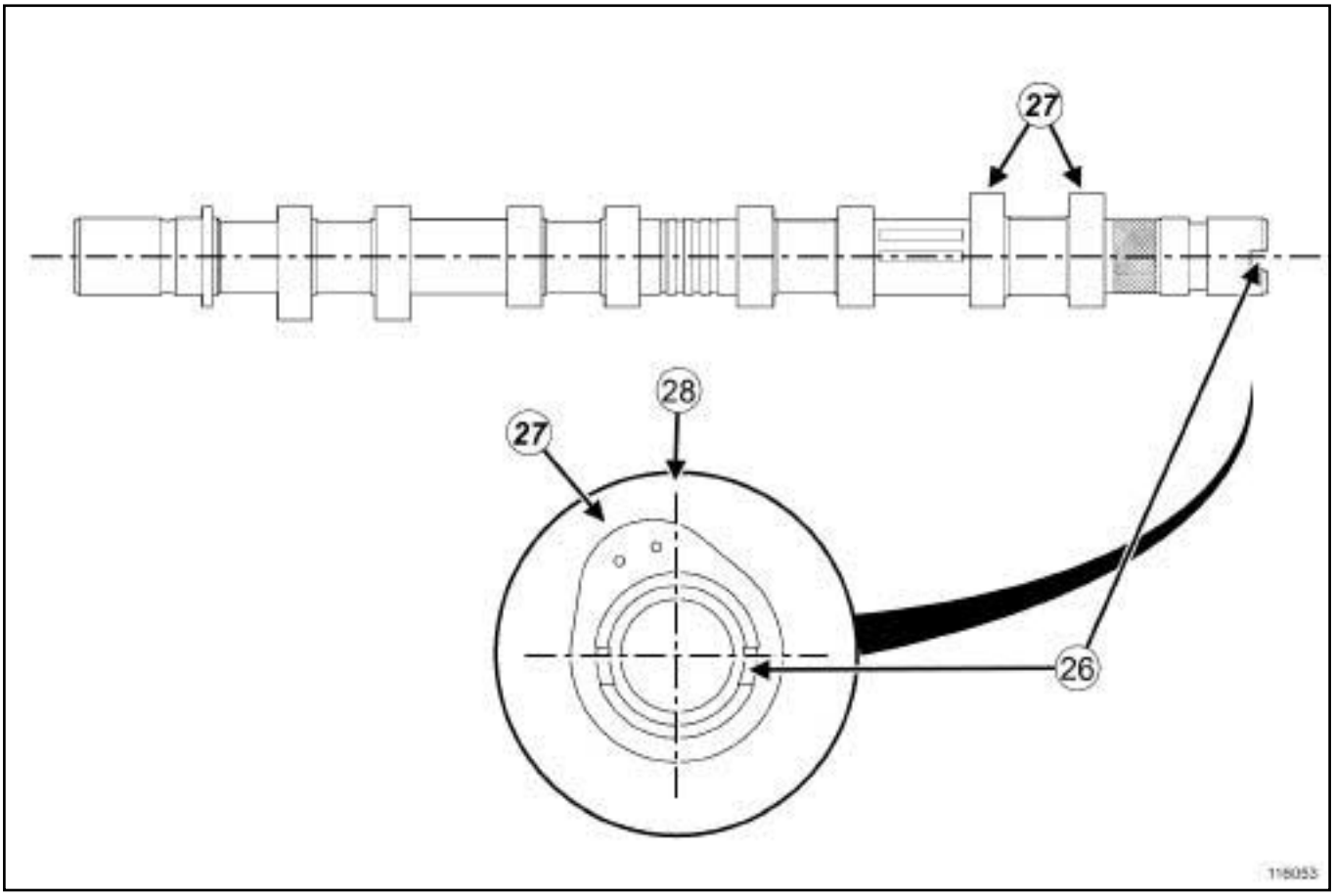

116053

- Position the groove (**26**) horizontally in the end of the camshaft (groove below the centre line of the camshaft).

  The cams (**27**) for cylinder no. 1 must be located to the left of the vertical axis (**28**) , flywheel end view.

B84 or C84 or E84 or K84 or L84, and K4M, and 764 or 768 or 788 or 856 – B84 or C84 or E84 or K84 or L84, and K4J

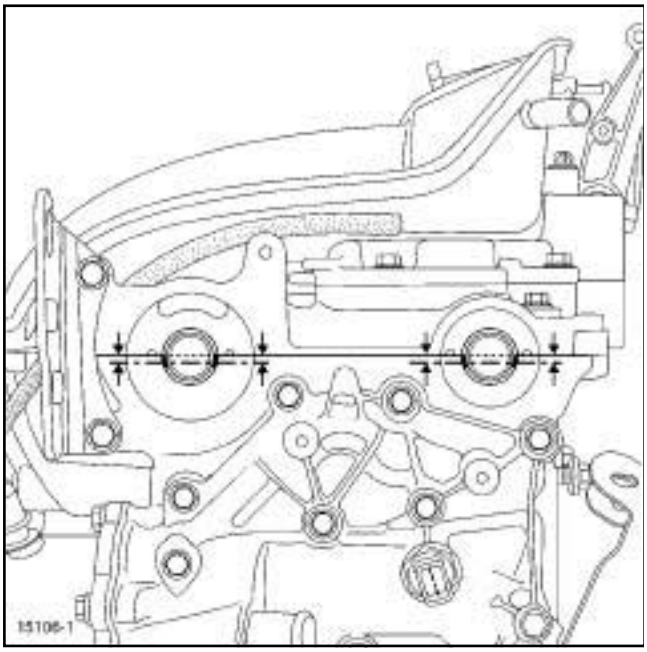

15106-1

- Position the camshaft grooves horizontally and offset downwards.

WARNING
The joint faces must be clean, dry and free from grease (avoid finger marks).

WARNING
Applying excess sealant could cause it to be squeezed out when parts are tightened. A mixture of sealant and fluid could damage certain components (engine, radiator, etc.).

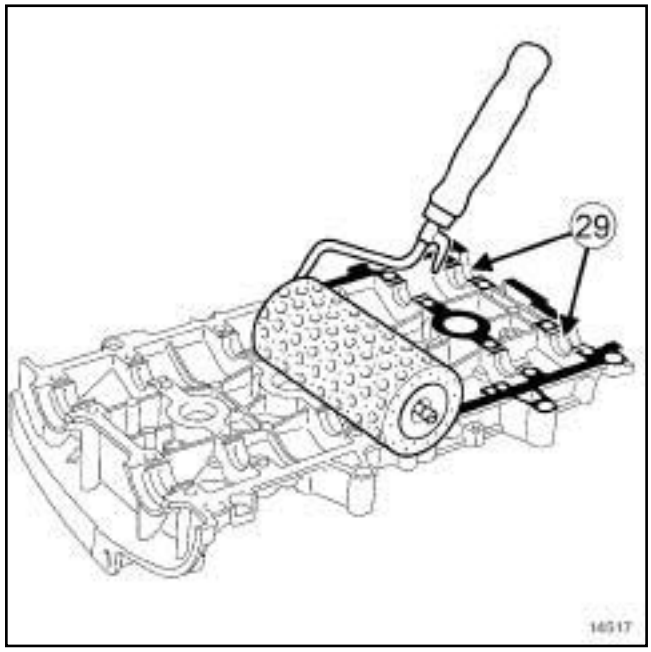

14517

- Use a stipple roller to apply **RESIN ADHESIVE** (see **Vehicle: Parts and ingredients for the repairwork**) (MR 364, 04B, Consumables - Products) to the camshaft rocker cover joint face until the joint face is well covered.
- Using a cloth, remove the **RESIN ADHESIVE** at (**29**) from the six camshaft rocker cover bearings.
- Refit the camshaft rocker cover.

B84 or C84 or E84 or K84 or L84, and K4M, and 764 or 768 or 788 or 856 – B84 or C84 or E84 or K84 or L84, and K4J

II - TIGHTENING PROCEDURE

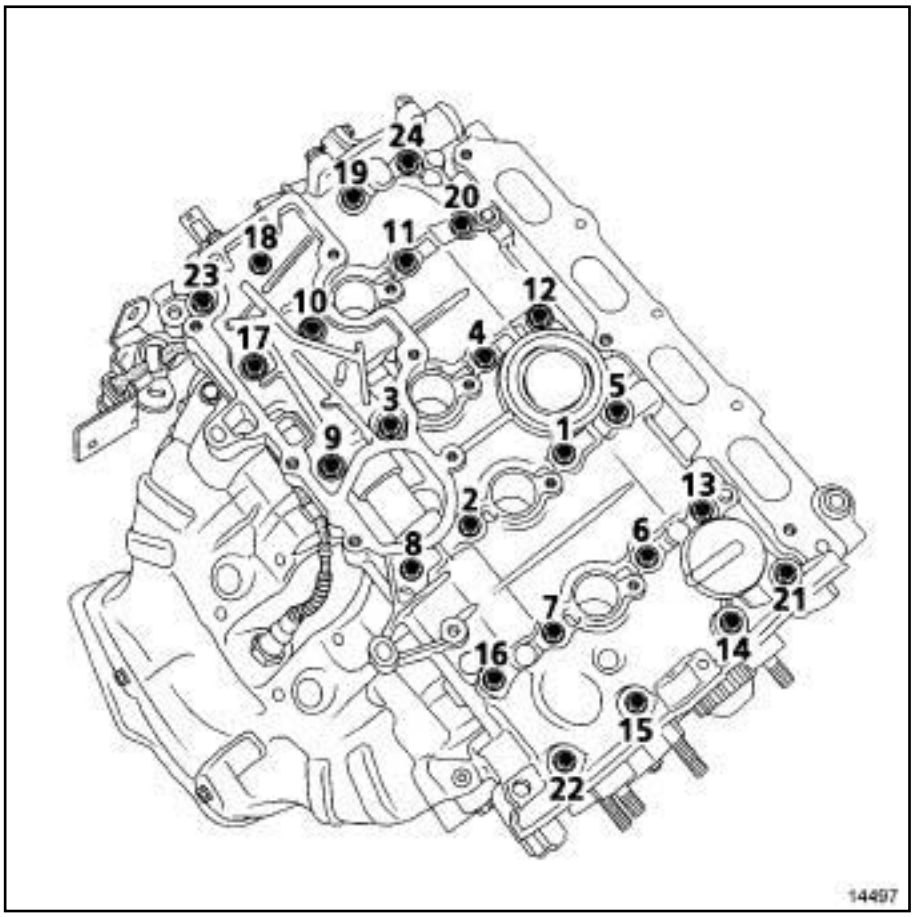

14497

- Torque tighten and in order:
  - **rocker cover bolts 22, 23, 20 and 13 (8 Nm)**,
  - **rocker cover bolts 1 to 12, 14 to 19, 21 to 24 (12 Nm)**.
- Loosen bolts **22, 23, 20 and 13** in order.
- Torque tighten in order **rocker cover bolts 22, 23, 20 and 13 (12 Nm)**.

B84 or C84 or E84 or K84 or L84, and K4M, and 764 or 768 or 788 or 856 – B84 or C84 or E84 or K84 or L84, and K4J

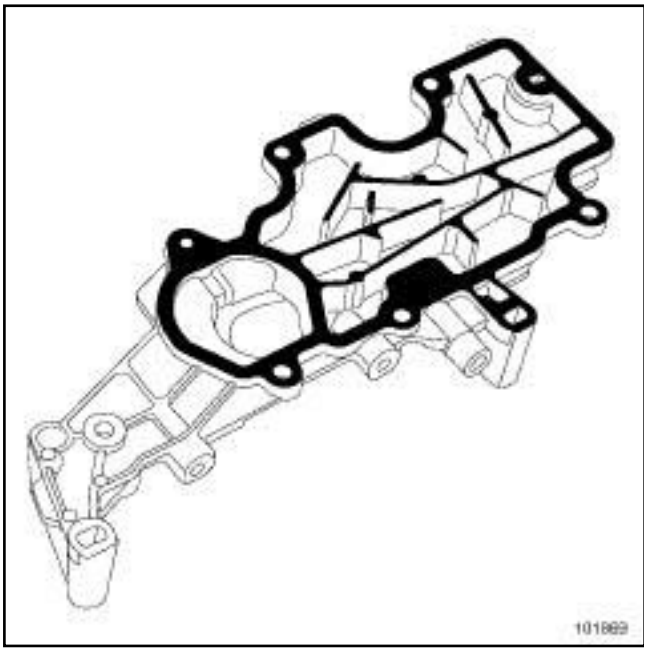

101869

❑

WARNING

the gasket faces must be clean, dry and free of grease.

WARNING

Applying excess sealant could cause it to be squeezed out when parts are tightened. A mixture of sealant and fluid could damage certain components (engine, radiator, etc.).

❑ Use a stipple roller to apply **RESIN ADHESIVE** (see **Vehicle: Parts and ingredients for the repairwork**) (MR 364, 04B, Consumables - Products) to the joint face until it is well covered.

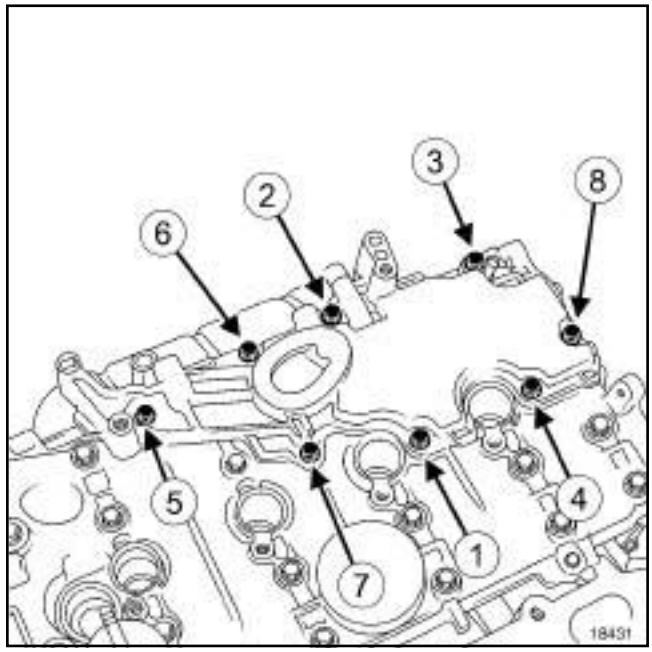

18431

❑ Refit the oil decanter.

❑ Torque tighten and in order:

- the **(new) oil decanter bolts in the untapped housing (15 Nm)**,
- the **(new or original) oil decanter bolts in the tapped housing (10 Nm)**.

B84 or C84 or E84 or K84 or L84, and K4M, and 764 or 768 or 788 or 856 – B84 or C84 or E84 or K84 or L84, and K4J

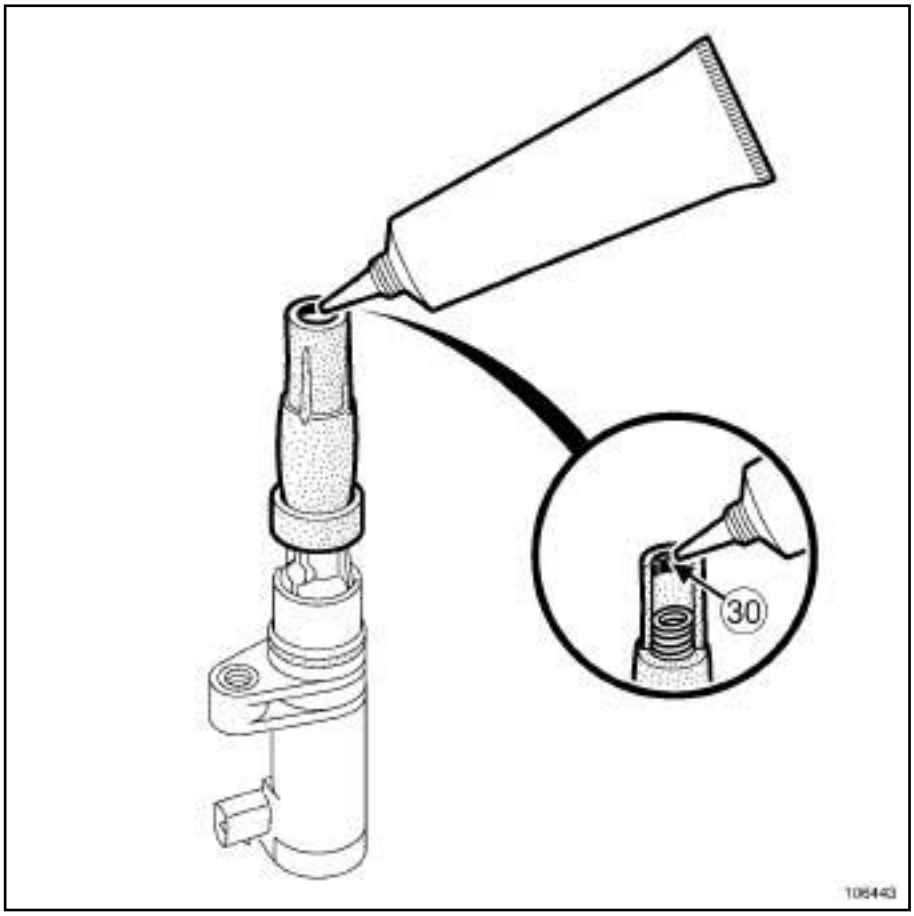

106443

- Apply a bead (**30**) of **FLUOSTAR 2L** (see **Vehicle: Parts and ingredients for the repairwork**) (MR 364, 04B, Consumables - Products) with a diameter of **2 mm** to the four ignition coils on the inner edge of the high-tension cap.
- Refit the plugs.
- Torque tighten the **spark plugs (25 to 30 Nm)** using the spark plug spanner set **(Ele. 1382)**.
- Refit the coils.
- Torque tighten:
  - the **coil bolts (if holes already tapped) (12 Nm)**,
  - the **coil bolts (if holes not tapped) (15 Nm)**.
- Always replace all the plenum chamber seals.

B84 or C84 or E84 or K84 or L84, and K4M, and 764 or 768 or 788 or 856 – B84 or C84 or E84 or K84 or L84, and K4J

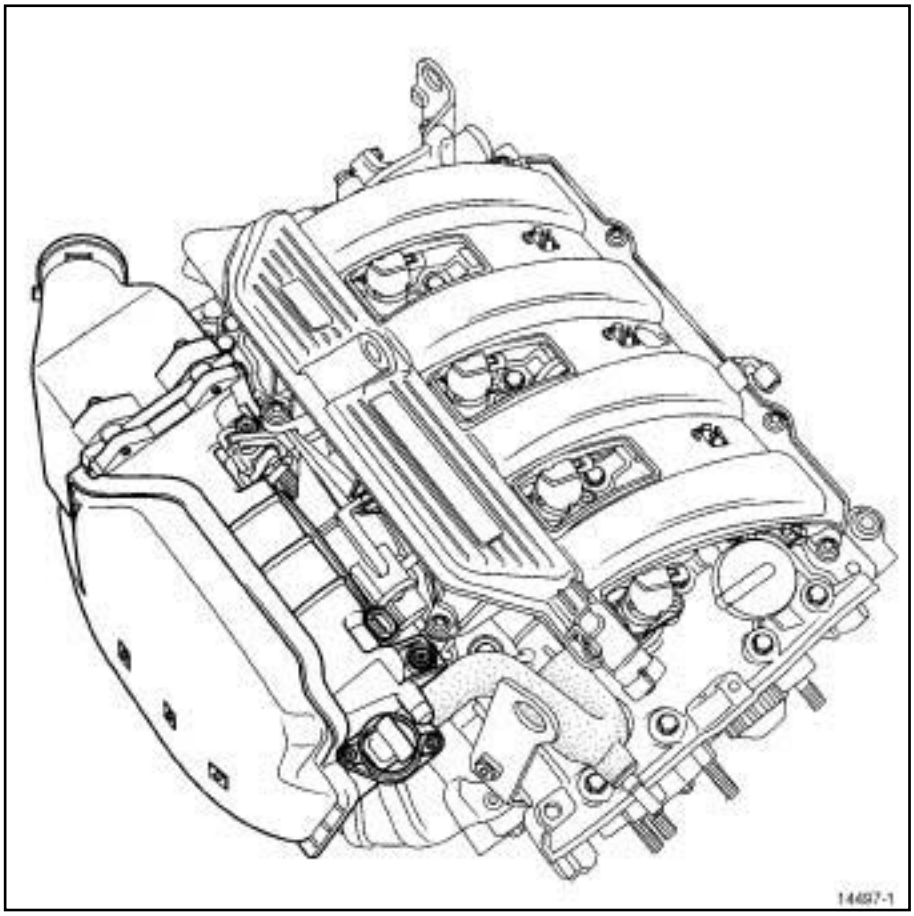

14497-1

- Torque tighten in order the **intake distributor bolts (9 Nm)**.
- Refit:
  - the throttle valve (see **12A**, **Fuel mixture**, **Throttle valve: Removal - Refitting**, page **12A-40**) ,
  - the air filter box (see **12A**, **Fuel mixture**, **Air filter unit: Removal - Refitting**, page **12A-11**) .

III - REPLACING THE CAMSHAFT SEALS

- There are two types of elastomer camshaft seals which are easy to identify.

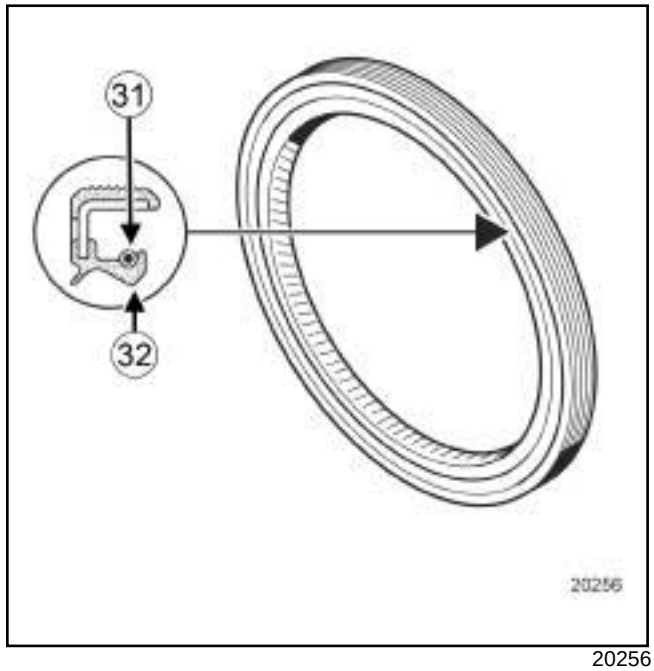

20256

- The first type of elastomer seal is fitted with a spring (**31**) and a lip seal (**32**) in a « V » shape.

B84 or C84 or E84 or K84 or L84, and K4M, and 764 or 768 or 788 or 856 – B84 or C84 or E84 or K84 or L84, and K4J

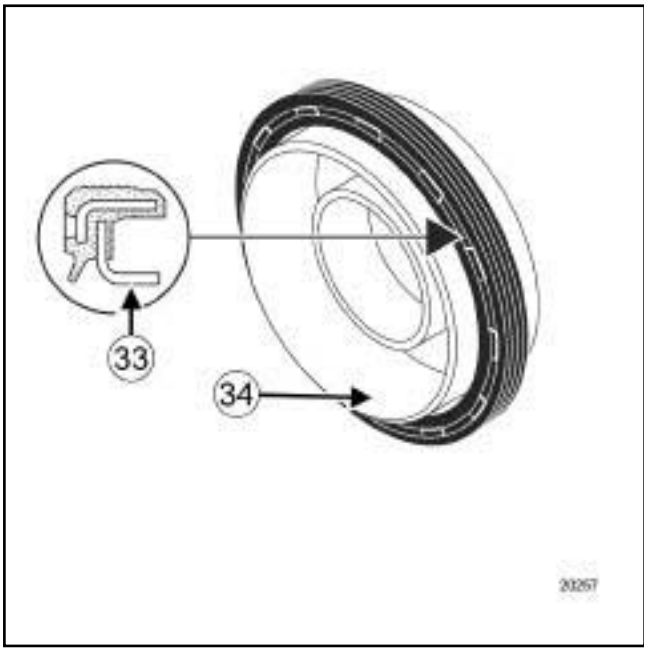

20257

❑ The second type of elastomer seal is fitted with a flat lip seal (**33**) and a protector (**34**) (which also assists in fitting the seal to the engine).

> Note:
>
> Both seal versions can be fitted on the same engine. They are not interchangeable. It is essential to use the same type of seal when replacing it, except when one or more camshafts are replaced.

1 - Fitting the first seal type to the inlet camshaft

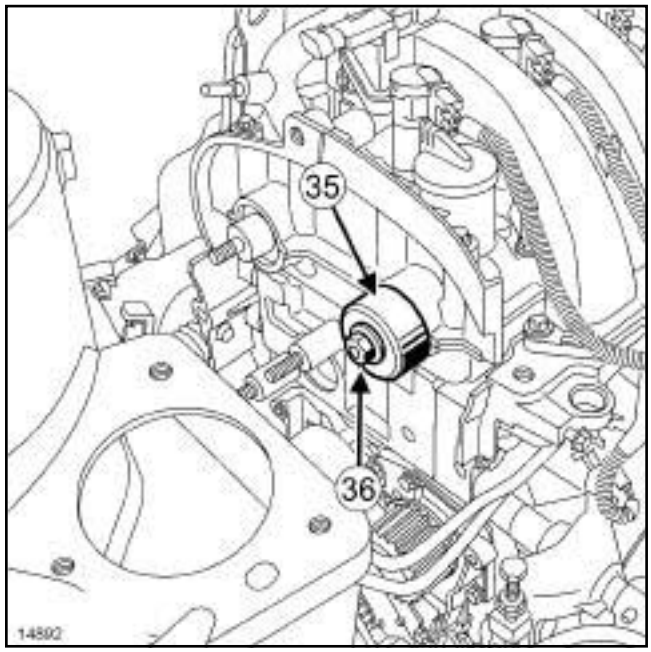

14892

❑ Fit the seals using the **(Mot. 1491)** (**35**) and the old nuts (**36**) .

2 - Tool for fitting inlet camshaft seals

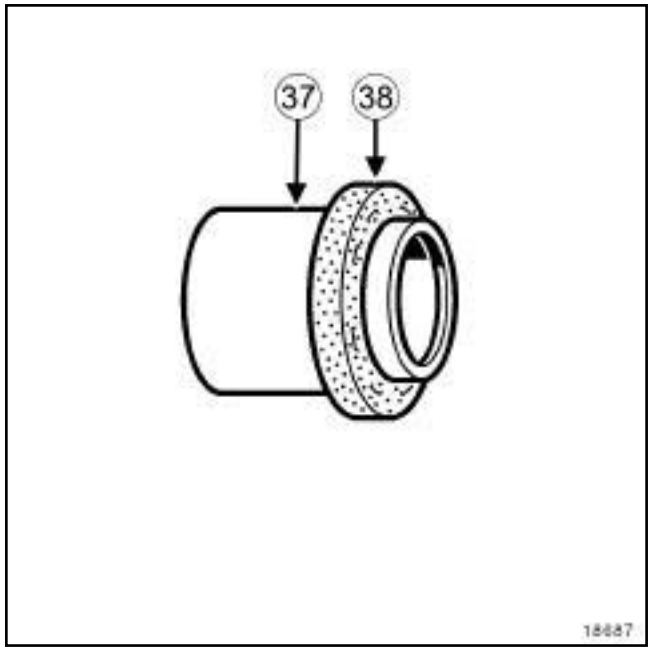

18687

❑ When handling, be sure to hold the seal by the protector (**37**) , as this type of seal is highly fragile. It is strictly forbidden to touch the elastomer seal (**38**) in order to prevent any oil leaks once the seal is fitted to the engine.

B84 or C84 or E84 or K84 or L84, and K4M, and 764 or 768 or 788 or 856 – B84 or C84 or E84 or K84 or L84, and K4J

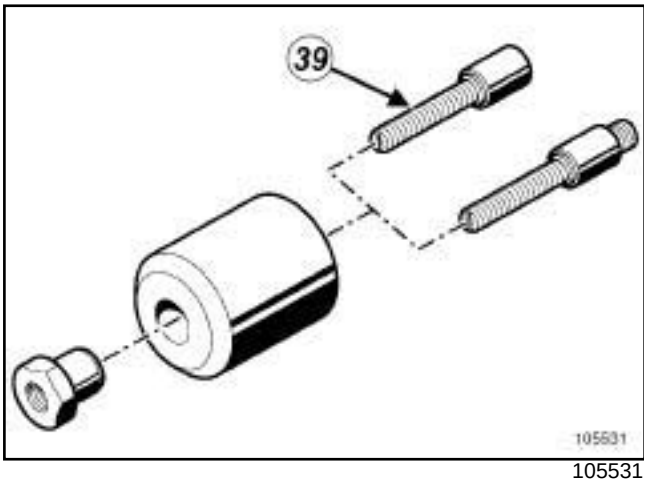

105531

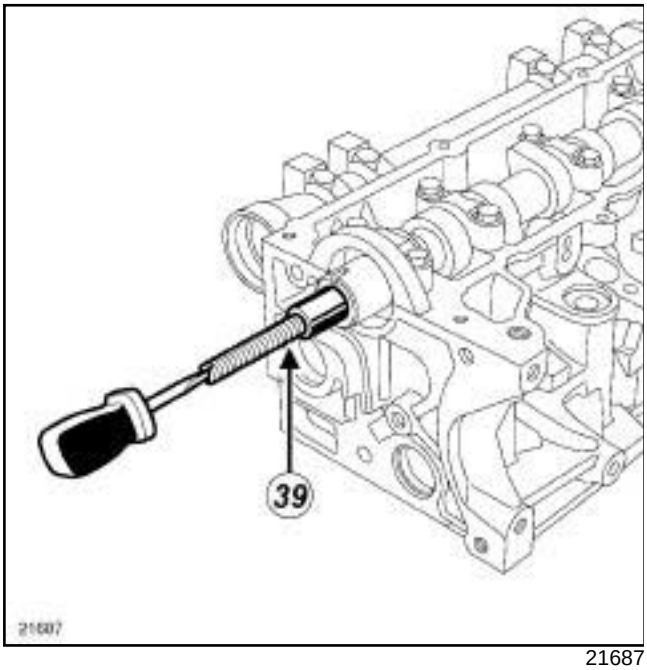

21687

❑ Screw the stud (**39**) of the **(Mot. 1632)** onto the camshaft.

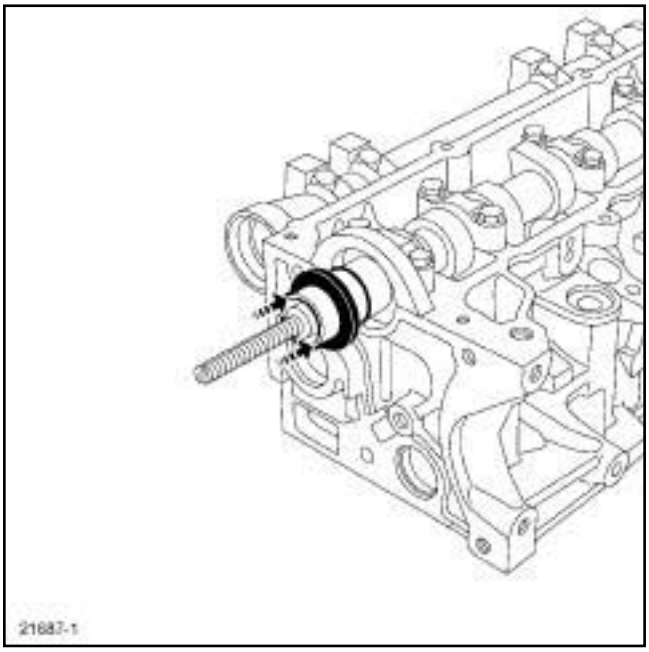

21687-1

❑ Fit the protector, with a seal, to the camshaft.

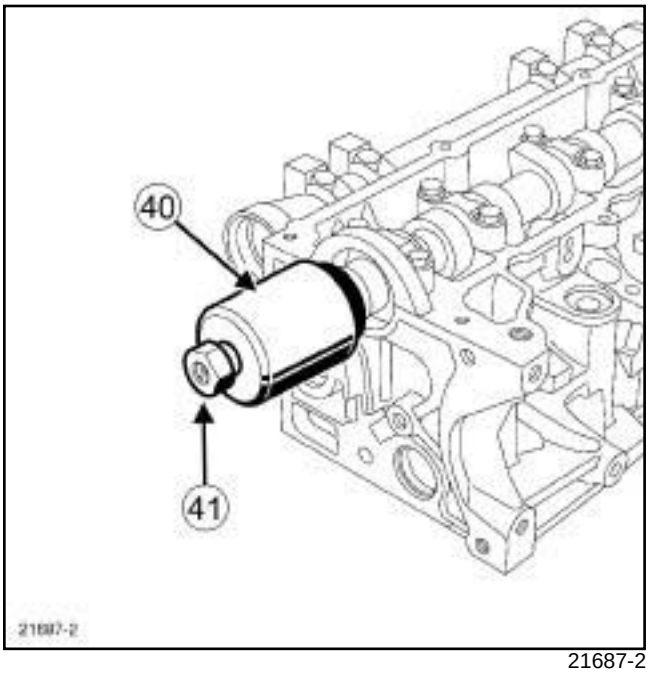

21687-2

❑ Fit the cover (**40**) and the collar nut (**41**) of the **(Mot. 1632)**.

B84 or C84 or E84 or K84 or L84, and K4M, and 764 or 768 or 788 or 856 – B84 or C84 or E84 or K84 or L84, and K4J

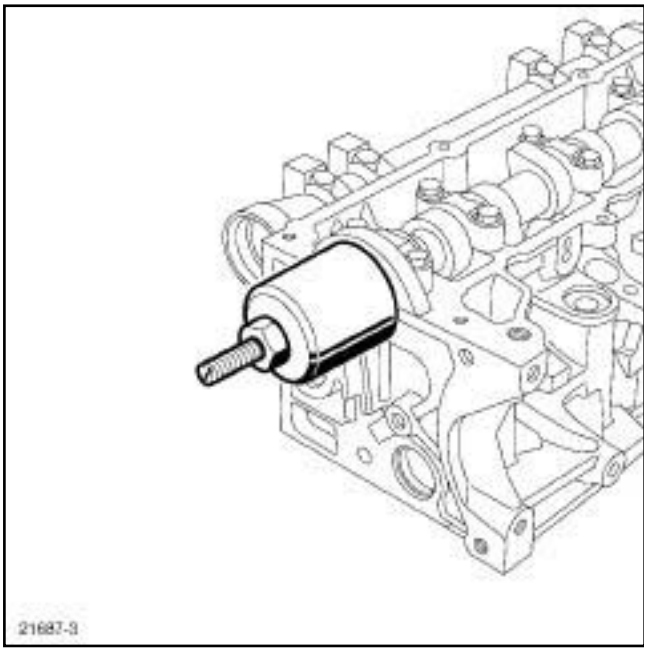

21687-3

- ❑ Screw on the collar nut until the cover touches the cylinder head.
- ❑ Remove the nut, the cup, the protector and the threaded rod.

IV - REFITTING

- ❑ Refit the timing belt (see **11A**, **Top and front of engine**, **Timing belt: Removal - Refitting**, page **11A-18**) .

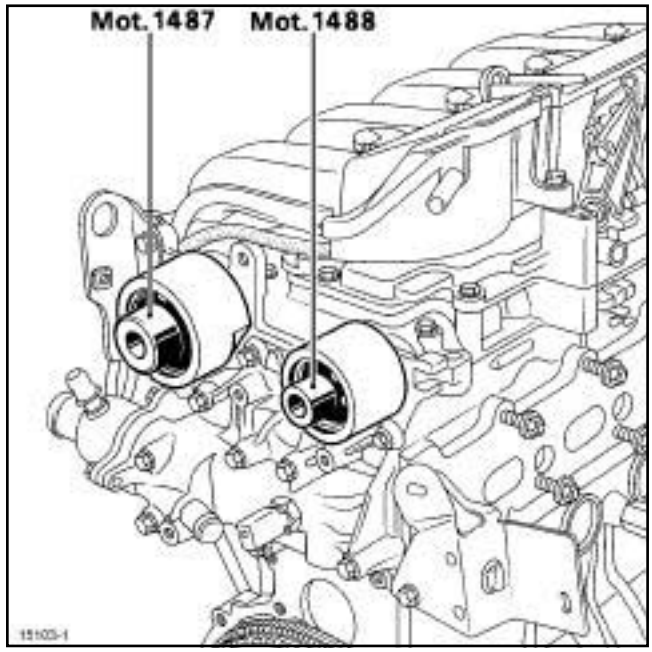

15103-1

- ❑ Refit:
  - the accessories belt (see **11A**, **Top and front of engine**, **Accessories belt: Removal - Refitting**, page **11A-4**) ,
  - new inlet camshaft sealing plugs using the **(Mot. 1487)**,
  - the new exhaust camshaft sealing plugs using tool **(Mot. 1488)**.
- ❑ Proceed in the reverse order to removal.
- ❑ Fill the cooling system (see **19A**, **Cooling**, **Cooling circuit: Draining - Refilling**, page **19A-15**) .
- ❑ Connect the battery (see **Battery : Removal - Refitting**) (MR 364, 80A, Battery).
- ❑ Bleed the cooling system (see **19A**, **Cooling**, **Cooling circuit: Draining - Refilling**, page **19A-15**) .

K4M, and 760 or 761 or 812 or 813

Essential special tooling	
Mot. 1672	Lower engine support.
Mot. 1453	Multiple-adjusting engine mounting support with retaining straps.
Mot. 1669	Fitting cam follower tappet.
Mot. 1453-01	Additional winder nut on engine lift support Mot. 1453.
Mot. 1490-01	Locking and adjusting camshaft pulleys.
Mot. 1573	Cylinder head support
Mot. 1513	Tool for refitting camshaft dephaser solenoid valve lip seal.
Mot. 1632	Tool for fitting PTFE camshaft seal
Mot. 1487	Tool for removing the camshaft covers (57 mm diameter).
Mot. 1488	Tool for removing the camshaft covers (43 mm diameter).

Tightening torques ▽	
cylinder head bolts (initial torque)	**20 N.m**
cylinder head bolts	**240° ± 6°**
rocker cover bolts 22, 23, 20 and 13	**12 N.m**
oil decanter bolts	**15 N.m**
camshaft dephaser solenoid valve bolt	**10 N.m**
intake distributor bolts	**9 N.m**

IMPORTANT
Wear protective gloves during the operation.

REMOVAL

I - REMOVAL PREPARATION OPERATION

❑ Position the vehicle on a two-post lift (see **Vehicle: Towing and lifting**) (02A, Lifting equipment).

❑ Remove:

- the engine covers,
- the engine undertray,
- the battery (see **Battery: Removal - Refitting**) (80A, Battery),
- the accessories belt (see **11A**, **Top and front of engine**, **Accessories belt: Removal - Refitting**, page **11A-4**) ,
- the timing belt (see **11A**, **Top and front of engine**, **Timing belt: Removal - Refitting**, page **11A-18**) ,
- the front bumper (see **Front bumper: Removal - Refitting**) (55A, Exterior protection).

❑ Drain the engine cooling system (see **19A**, **Cooling**, **Cooling circuit: Draining - Refilling**, page **19A-15**) .

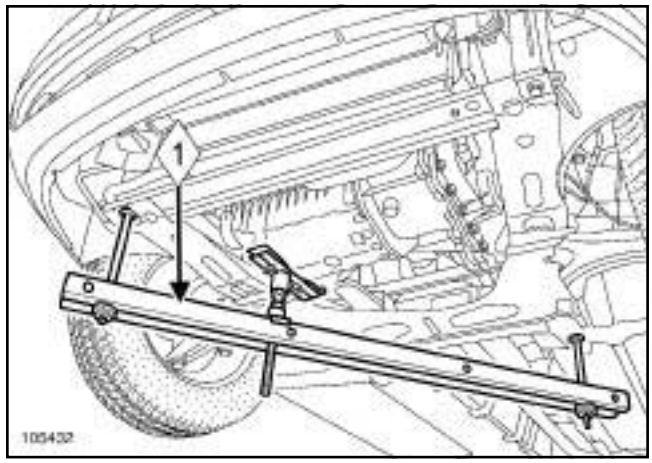

105432

❑ Fit the engine support (**1**) **(Mot. 1672)**.

❑ Remove the **(Mot. 1453)** then the **(Mot. 1669)**.

K4M, and 760 or 761 or 812 or 813

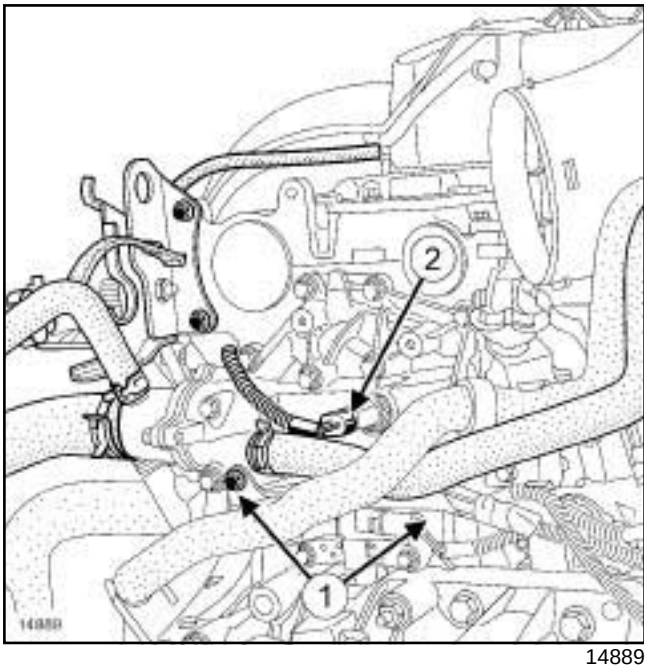

14889

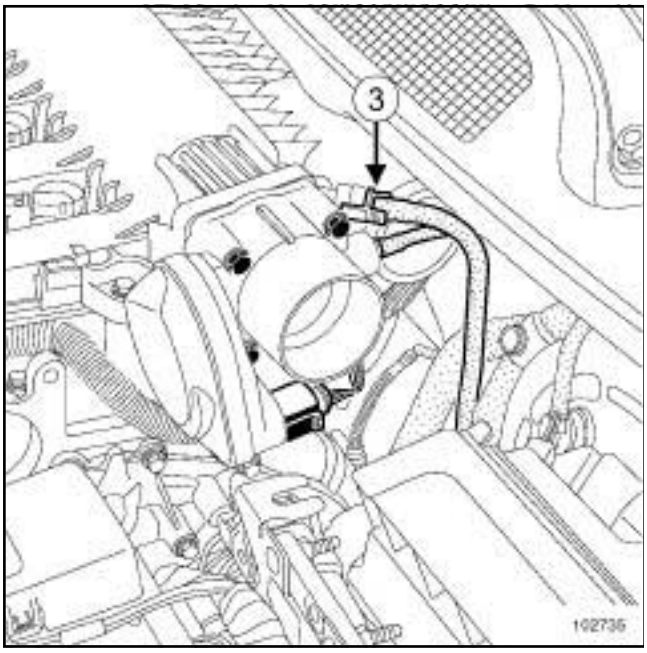

102735

❑ Remove the bolt (**1**) from the electrical wiring mounting.

❑ Disconnect:

- the coolant temperature sensor connector (**2**) ,
- the water chamber pipes using the tool **(Mot. 1453)** or **(Mot. 1453-01)** or **(Mot. 1490-01)**,
- the brake servo vacuum pipe (**3**) from the inlet distributor side.

❑ Separate the wiring bracket assembly.

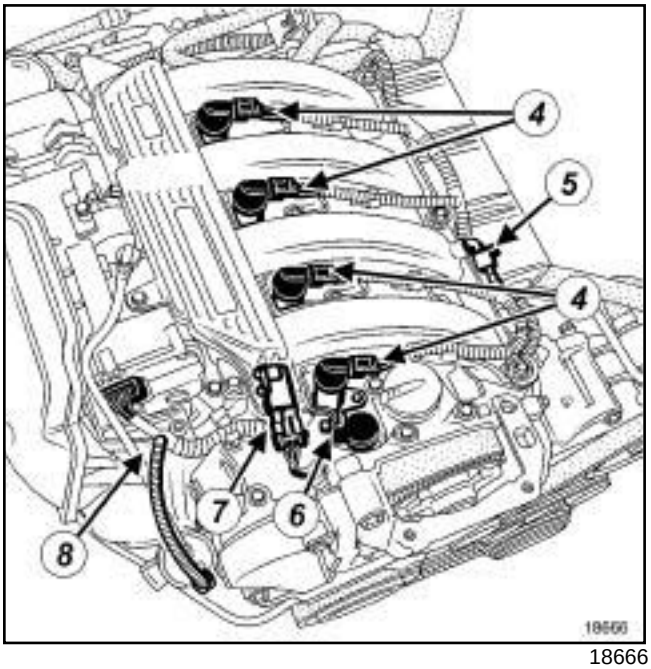

18666

❑ Disconnect:

- the ignition coil connectors (**4**) ,
- the connector (**5**) from the air temperature sensor,
- the camshaft dephaser solenoid valve connector (**6**) ,
- the inlet distributor pressure sensor connector (**7**) ,
- the fuel vapour recirculation solenoid valve pipe (**8**) .

K4M, and 760 or 761 or 812 or 813

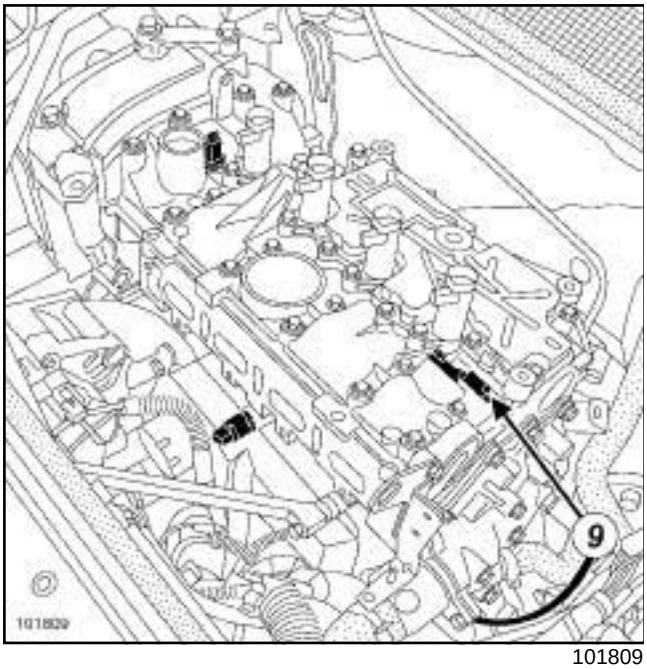

101809

❑ Disconnect:

- the connector (**9**) from the camshaft position sensor,
- the catalytic converter upstream oxygen sensor connector.

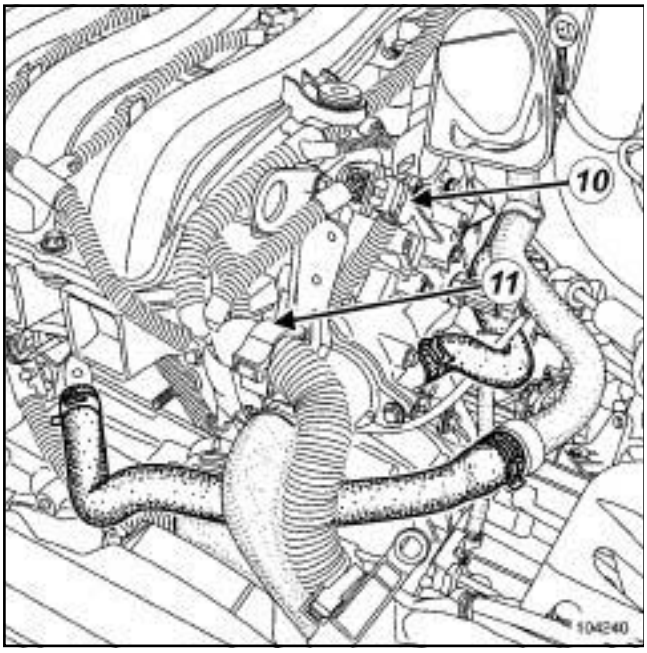

104240

❑ Disconnect the injector connector (**10**) .

❑ Unfasten clip (**11**) .

❑ Move the electrical wiringto one side.

❑ Remove:

- the ignition coils (see **17A**, **Ignition**, **Coils Removal - Refitting**, page **17A-1**) ,
- the spark plugs (see **17A**, **Ignition**, **Spark plugs: Removal - Refitting**, page **17A-3**) ,
- the dephaser solenoid valve (see **Camshaft dephaser solenoid valve: Removal - Refitting**) ,
- the camshaft position sensor (see **Camshaft position sensor: Removal - Refitting**) .

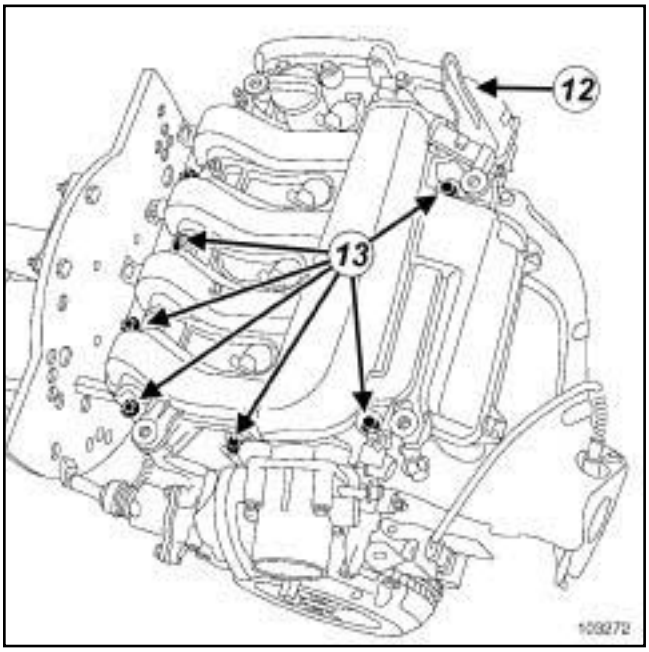

103272

❑ Remove:

- the lifting bracket (**12**) ,
- the inlet distributor bolts (**13**) ,
- the inlet distributor.

K4M, and 760 or 761 or 812 or 813

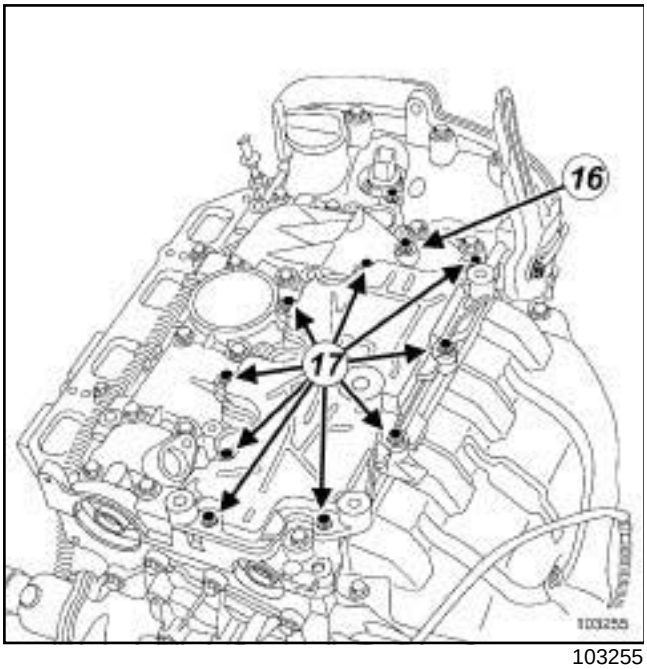

103255

❑

WARNING

Do not remove the bolt (**16**) as it acts as a stop for the squared cam tappet.

❑ Remove:

- the bolts (**17**) from the oil separator,
- the oil separator.

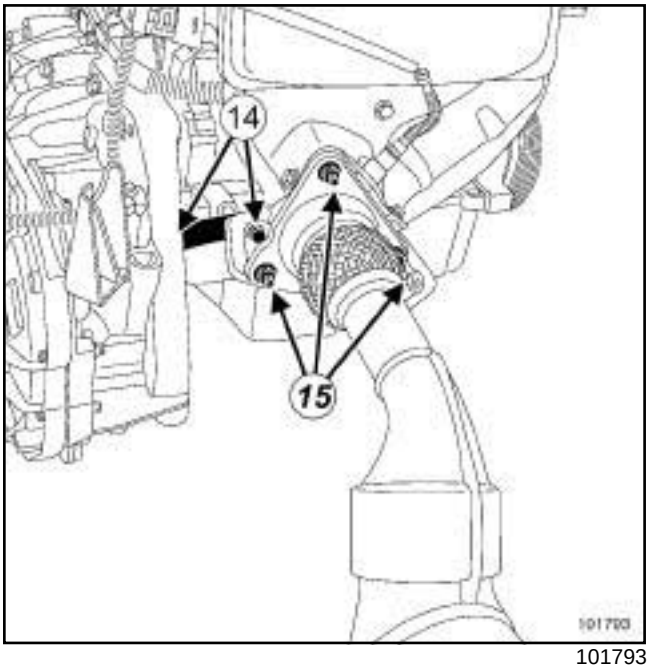

101793

❑ Remove:

- the catalytic converter - gearbox stay bolts (**14**) ,
- the catalytic converter/gearbox strut,
- the nuts (**15**) from the exhaust pipe.

❑ Move the exhaust pipe to one side.

❑ Remove the camshaft pulleys using the **(Mot. 1490-01)**.

K4M, and 760 or 761 or 812 or 813

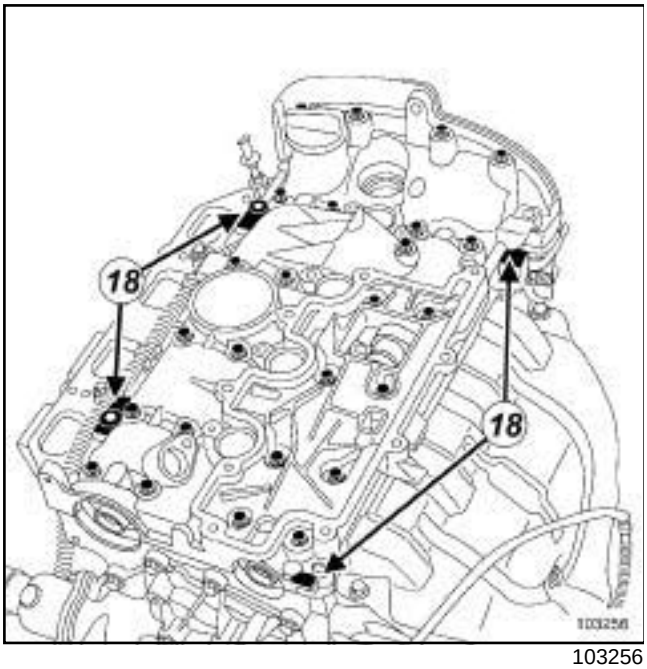

103256

❑ Remove:

- the rocker cover bolts,
- detach the rocker cover vertically by tapping the lugs (**18**) with a copper hammer.

WARNING
Do not scrape the joint faces of the aluminium, any damage caused to the joint face will result in a risk of leaks.

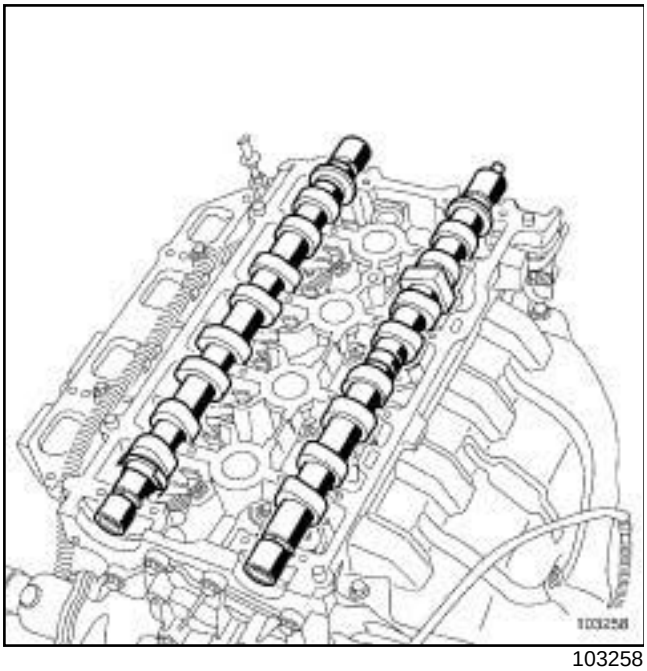
103258

❑ Remove the inlet and exhaust camshafts

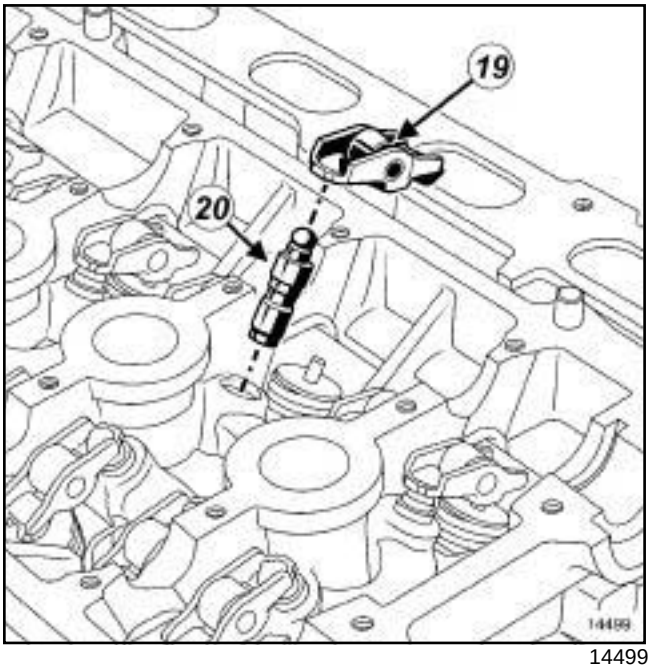

14499

❑ Remove:

- the valve rockers (**19**) ,
- the hydraulic tappets (**20**) .

Note:
To prevent any risk of unpriming the hydraulic tappets make sure that they are vertical.

II - OPERATION FOR REMOVAL OF PART CONCERNED

❑ Remove:

- the cylinder head bolts,
- the cylinder head.

❑ Mount the cylinder head on the cylinder head support **(Mot. 1573)**.

❑ Remove the cylinder head gasket from the cylinder block.

REFITTING

I - REFITTING PREPARATION OPERATION

❑ **parts always to be replaced: cylinder head bolts (10,02,01,14)**.

❑ **parts always to be replaced: Cylinder head gasket (10,02,01,04)**.

K4M, and 760 or 761 or 812 or 813

❑ **parts always to be replaced: ring between exhaust manifold and catalytic converter (10,08,02, 20)**.

1 - Cleaning the cylinder head joint face

❑

IMPORTANT
Wear goggles with side protectors for this operation.

IMPORTANT
Wear leaktight gloves (Nitrile type) for this operation.

WARNING
Do not scrape the joint faces of the aluminium, any damage caused to the joint face will result in a risk of leaks.

WARNING
Do not allow this product to drip onto the paintwork.

Clean the cylinder head carefully to avoid any foreign bodies entering the oil return and supply pipes.

Failure to follow this advice could lead to the blocking of the various oil inlet galleries, which would quickly result in engine damage.

WARNING
To ensure proper sealing, the gasket surfaces must be clean, dry and not greasy (avoid any finger marks).

WARNING
Protect the oilway so that foreign bodies do not enter the oil pipes in the cylinder head.

Failure to follow this instruction could lead to the blocking of the oilways, resulting in a rapid deterioration of the camshaft.

❑ Use **SUPER CLEANING AGENT FOR JOINT FACES** (see **Vehicle: Parts and ingredients for the repairwork**) (04B, Consumables - Products) to clean:

- the cylinder head gasket face if being reused,
- the cylinder block gasket face.

❑ Use **SURFACE CLEANER** (see **Vehicle: Parts and ingredients for the repairwork**) (04B, Consumables - Products) to degrease:

- the cylinder head gasket face if being reused,
- the cylinder block gasket face.

2 - Checking the gasket face

❑ Check for gasket face deformation using a ruler and a set of shims.

WARNING
No regrinding of the cylinder head is permitted.

❑ The maximum deformation is **0.05 mm**.

Note:

If the cylinder head is faulty:

- strip down the cylinder head (see **Stripping the cylinder head**) (Technical Note 6023A, 10A, Engine and peripherals),
- test the cylinder head in order to detect any possible cracks using the cylinder head test kit (see **Cylinder head testing equipment: Use**) (Technical Note 6026A, 11A, Top and front of engine),
- rebuild the cylinder head (see **Rebuilding the cylinder head**) (Technical Note 6023A, 10A, Engine and peripherals).

II - REFITTING OPERATION FOR PART CONCERNED

❑ Bring the pistons to mid-stroke position to prevent any risk of contact with the valves when tightening the cylinder head.

WARNING
To ensure proper sealing, the gasket surfaces must be clean, dry and not greasy (avoid any finger marks).

❑ Check that the centring dowel is present on the cylinder block.

K4M, and 760 or 761 or 812 or 813

❑ Fit:

- a new cylinder head gasket,
- the cylinder head equipped with new bolts on the cylinder block.

WARNING

In order to ensure that the bolts are correctly tightened, use a syringe to remove any oil which may be in the cylinder head mounting holes.

WARNING

Do not oil the new bolts. Be sure to oil bolts being reused.

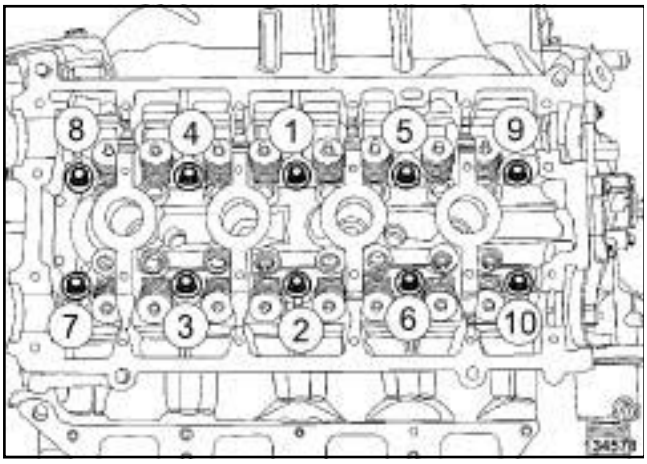

134578

❑ Without tightening, fit the cylinder head bolts in order.

❑ Pretighten to torque and in order the **cylinder head bolts (initial torque) (20 N.m)**.

❑ Check that all the cylinder head bolts are tightened to the correct torque of **20 N.m**.

❑ Angle tighten in order the **cylinder head bolts (240° ± 6°)**.

Note:

Do not retighten the cylinder head bolts after applying this procedure.

III - FINAL OPERATION

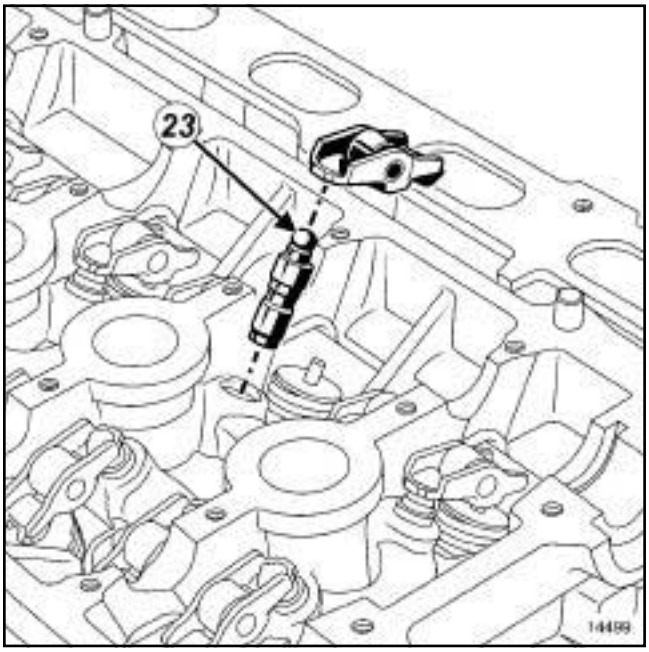

14499

❑ Reprime the hydraulic tappets (hydraulic tappets may empty after a long down time).

To check if repriming is necessary, press the top of the tappet (**23**) with your thumb.

If the tappet piston depresses:

- immerse the tappets in a container of diesel fuel,
- refit the hydraulic tappets.

❑ Refit:

- the valve rockers,
- the camshafts, oiling the bearings.

K4M, and 760 or 761 or 812 or 813

CAMSHAFT MARKINGS

Inlet camshaft

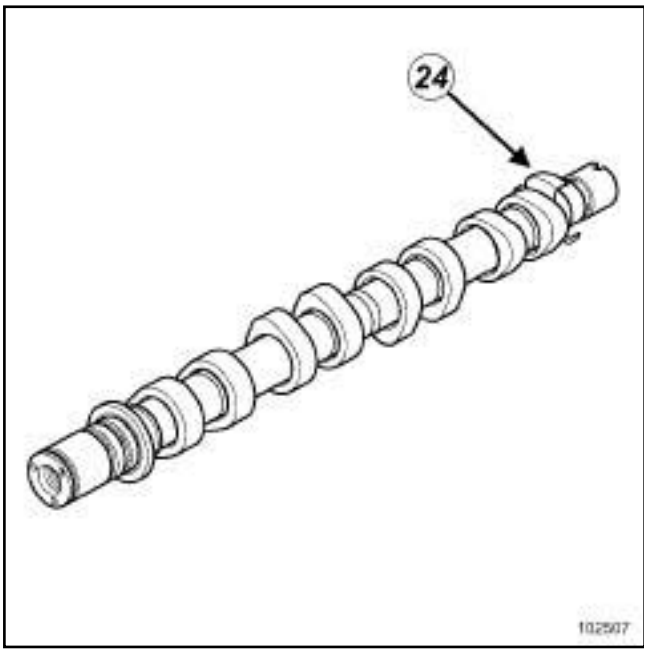

102507

(**24**) The inlet camshaft is fitted with the camshaft sensor target.

Exhaust camshaft

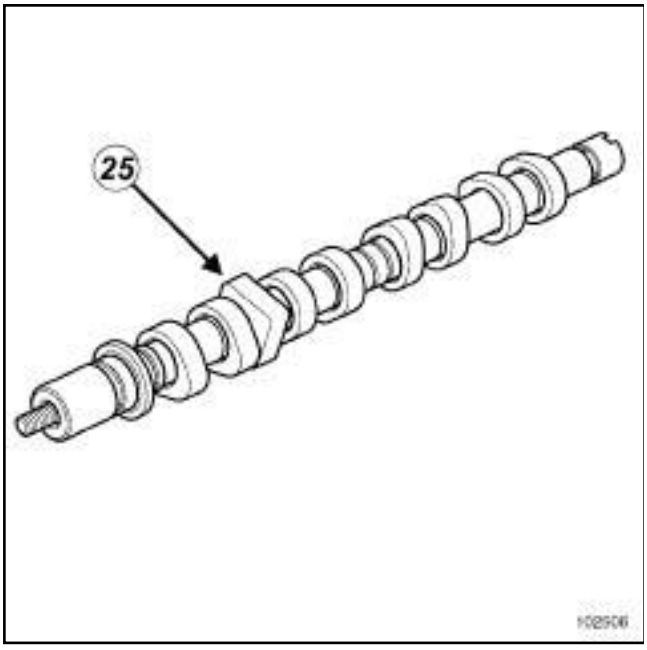

102506

(**25**) The exhaust camshaft is fitted with the square cam.

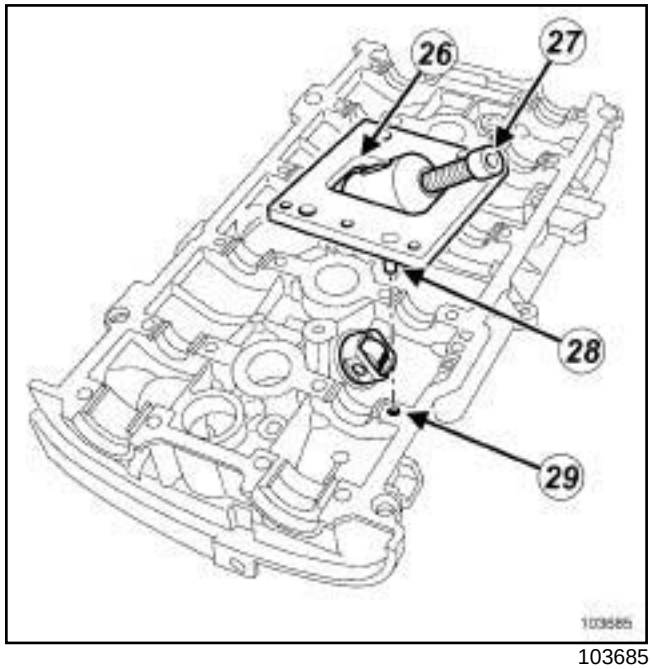

103685

❑ Position the pin (**26**) of the **(Mot. 1669)** against the bottom of the groove by loosening the bolt (**27**) .

❑ Position the **(Mot. 1669)** on the rocker cover, correctly positioning the pin (**28**) in the hole (**29**) in the rocker cover.

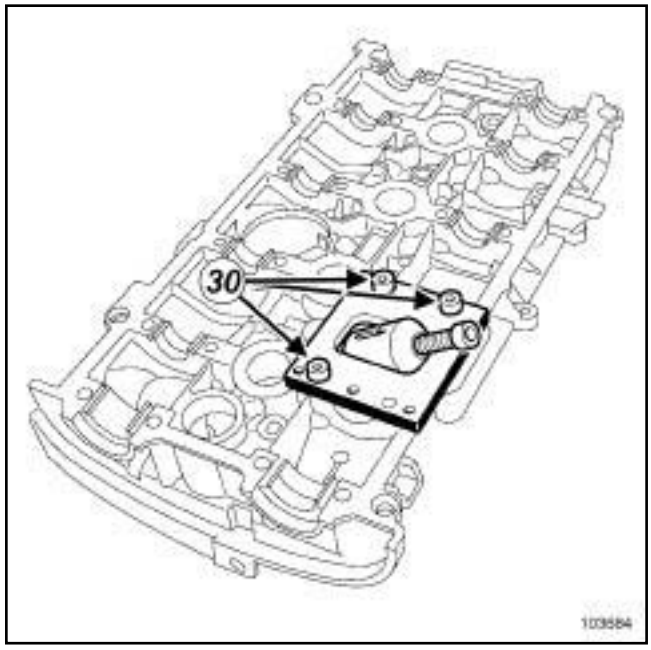

103684

❑ Fit the **(Mot. 1669)** for the rocker cover using the bolts (**30**) .

K4M, and 760 or 761 or 812 or 813

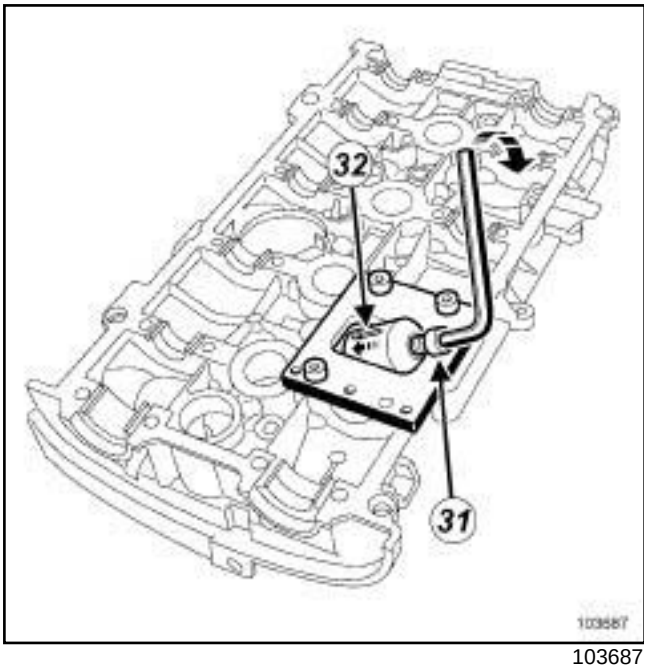

103687

❑ Fit the bolt (**31**) until the pin (**32**) is against the bottom of the groove.

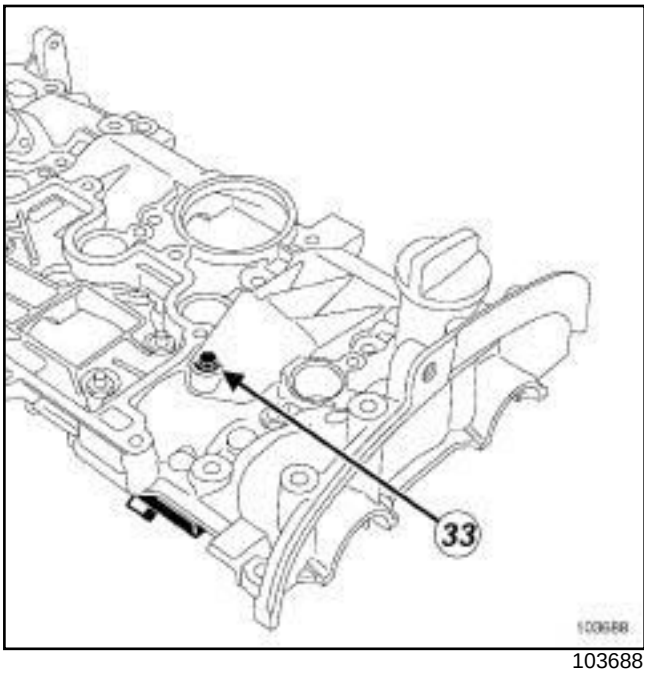

103688

❑ Position the bolt of the **(Mot. 1669)** in place of the original bolt at (**33**) to hold the tappet in the compressed position.

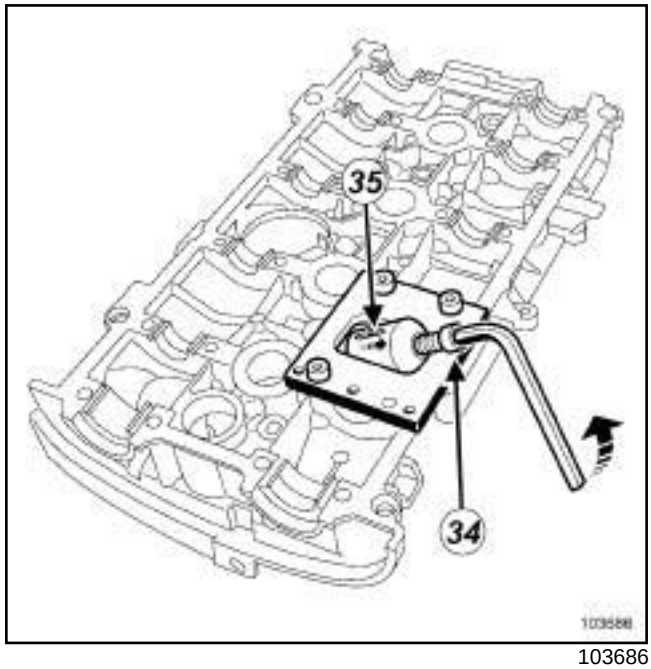

103686

❑ Undo the bolt (**34**) until the pin (**35**) is against the bottom of the groove.

❑ Remove the **(Mot. 1669)** from the rocker cover.

K4M, and 760 or 761 or 812 or 813

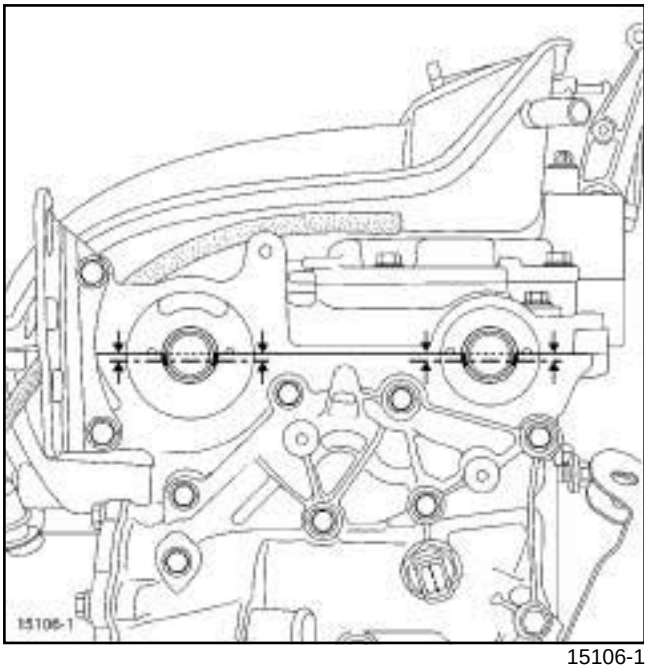

15106-1

❑ Position the camshaft grooves horizontally and offset downwards.

WARNING

To ensure proper sealing, the gasket surfaces must be clean, dry and not greasy (avoid any finger marks).

WARNING

Applying excess sealant could cause it to be squeezed out when parts are tightened. A mixture of sealant and fluid could damage certain components (engine, radiator, etc.).

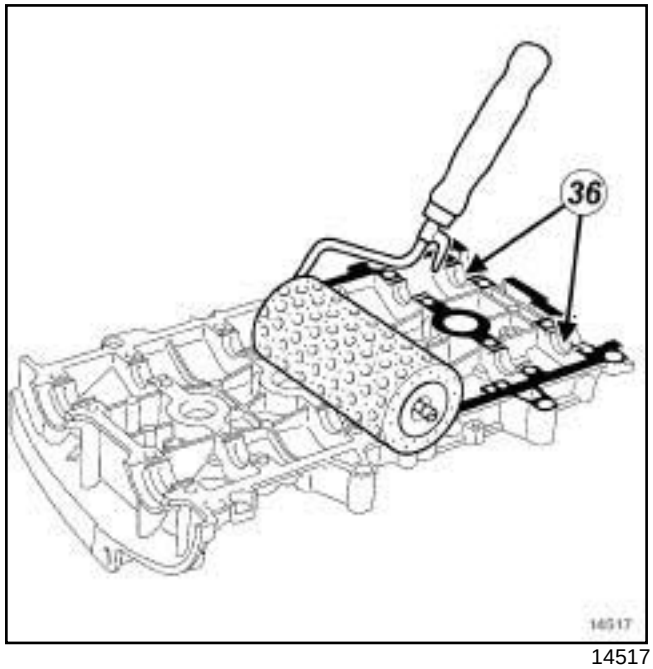

14517

❑ Use a stipple roller to apply **RESIN ADHESIVE** (see **Vehicle: Parts and ingredients for the repairwork**) (04B, Consumables - Products) to the camshaft rocker cover joint face until the joint face turns reddish in colour.

❑ Use a cloth to remove the **RESIN ADHESIVE** (see **Vehicle: Parts and ingredients for the repairwork**) (04B, Consumables - Products) at (**36**) on the six camshaft rocker cover bearings.

❑ Refit the camshaft rocker cover.

K4M, and 760 or 761 or 812 or 813

TIGHTENING THE ROCKER COVER

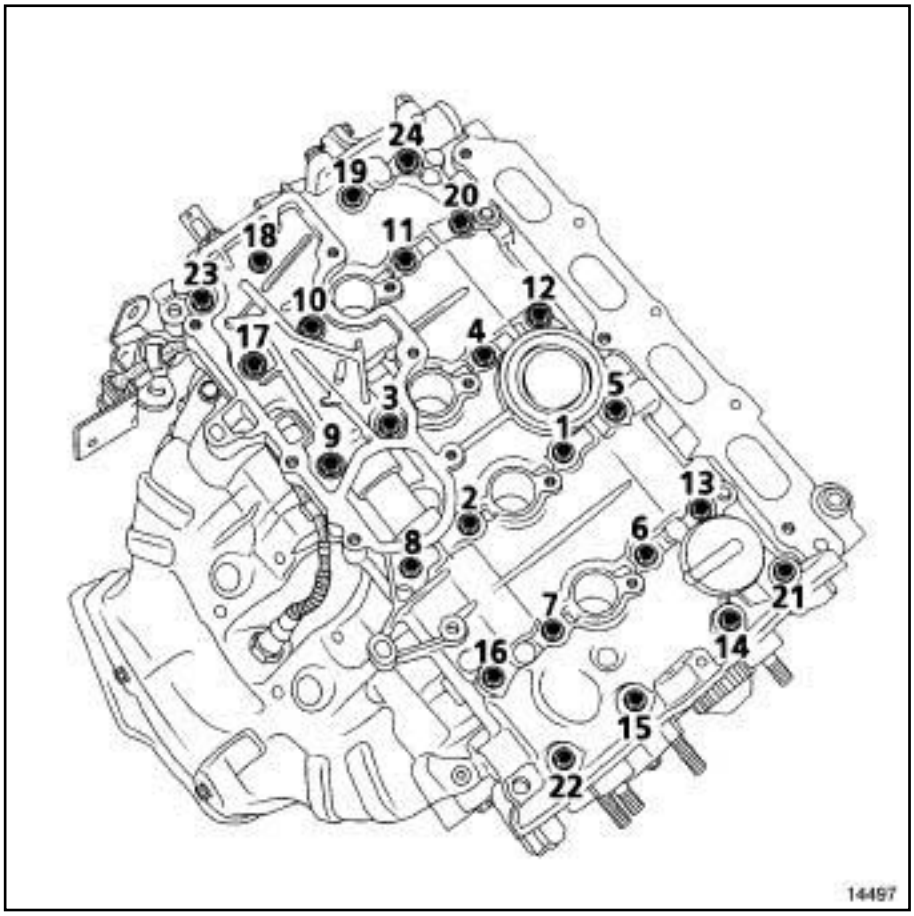

14497

- Tighten to torque and in order:
  - the **rocker cover bolts 22, 23, 20, 13 (8 N.m)**,
  - the **rocker cover bolts 1 to 12, 14 to 19, 21 to 24 (12 N.m)**.
- Loosen bolts 22, 23, 20 and 13, in order.
- Torque tighten in order the **rocker cover bolts 22, 23, 20 and 13 (12 N.m)**.

K4M, and 760 or 761 or 812 or 813

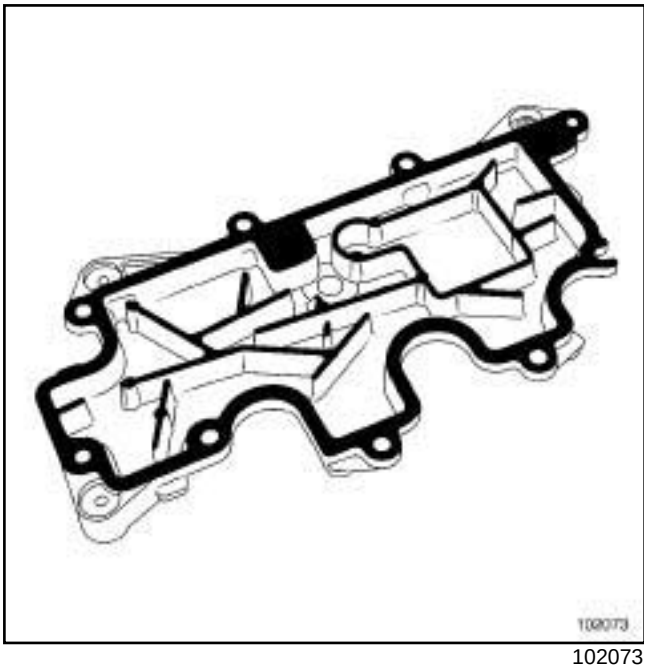

102073

❑

WARNING

To ensure proper sealing, the gasket surfaces must be clean, dry and not greasy (avoid any finger marks).

WARNING

Applying excess sealant could cause it to be squeezed out when parts are tightened. A mixture of sealant and fluid could damage certain components (engine, radiator, etc.).

❑ Use a stipple roller to apply **RESIN ADHESIVE** (see **Vehicle: Parts and ingredients for the repairwork**) (04B, Consumables - Products) to the joint face until it is well covered.

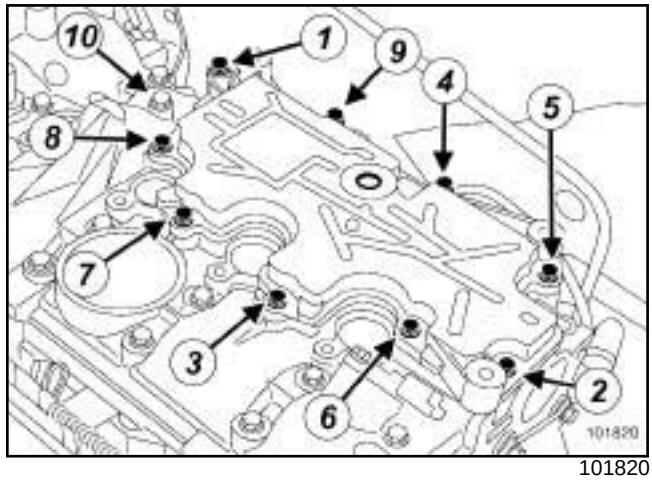

101820

❑ Refit the oil decanter.

❑ Torque tighten in order the **oil decanter bolts (15 N.m)**.

❑ Remove the bolt from the **(Mot. 1669)** to release the tappet.

❑ Refit the original bolt, applying a drop of **FRENETANCHE** (see **Vehicle: Parts and ingredients for the repairwork**) (04B, Consumables - Products).

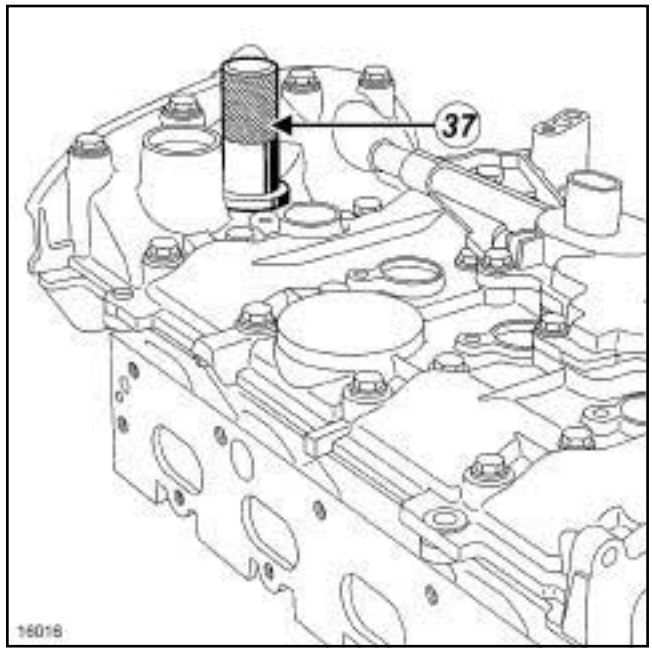

16016

❑ Refit:

- the camshaft dephaser solenoid valve seal using the **(Mot. 1513)** (**37**) ,
- the camshaft dephaser solenoid valve.

❑ Torque tighten the **camshaft dephaser solenoid valve bolt (10 N.m)**.

K4M, and 760 or 761 or 812 or 813

106443

- Apply a bead (**38**) of **FLUOSTAR 2L** (see **Vehicle: Parts and ingredients for the repairwork**) (04B, Consumables - Products) **2 mm** in diameter on the internal perimeter of the high tension caps on the four ignition coils.

K4M, and 760 or 761 or 812 or 813

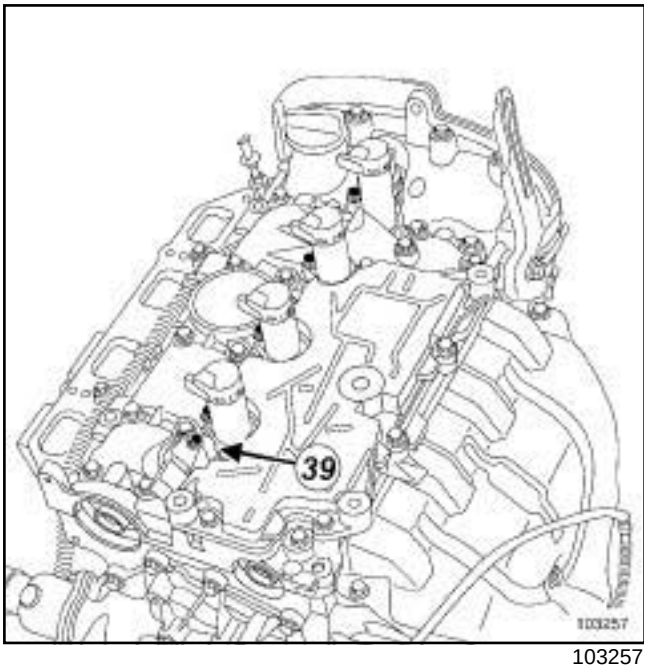

103257

❑ Refit:

- the spark plugs (see **17A**, **Ignition**, **Spark plugs: Removal - Refitting**, page **17A-3**) ,
- the ignition coils (see **17A**, **Ignition**, **Coils Removal - Refitting**, page **17A-1**) ,
- the camshaft position sensor (see **Camshaft position sensor: Removal - Refitting**) .

❑ Always replace all the inlet distributor seals.

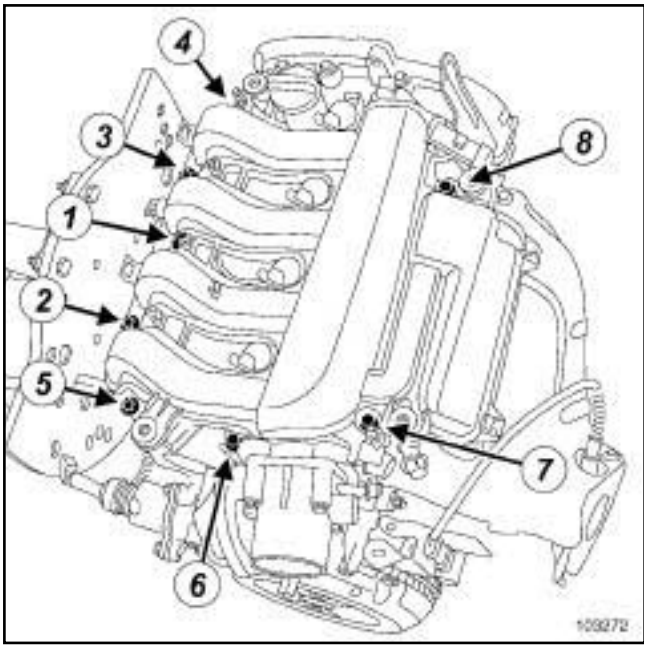

103272

❑ Torque tighten in order the **intake distributor bolts (9 N.m)**.

REPLACING THE CAMSHAFT SEALS

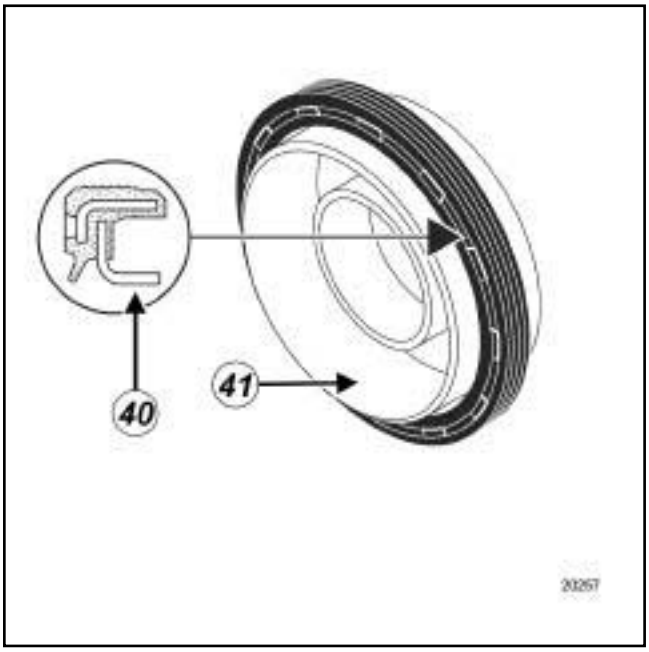

20257

❑ The elastomer seal on these engines is fitted with a flat lip seal (**40**) and a protector (**41**) (also assists in fitting the seal to the engine).

K4M, and 760 or 761 or 812 or 813

a - Fitting the exhaust camshaft seal

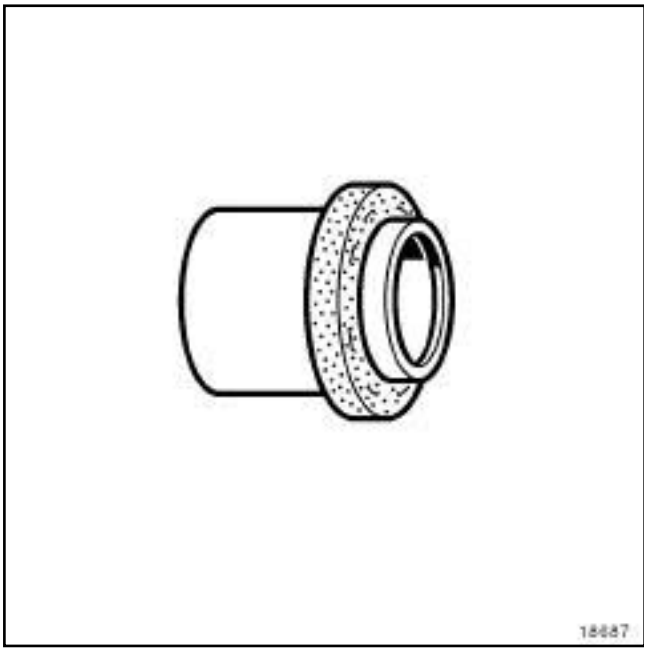

18687

❑

WARNING

It is very important to hold the protector when handling the seal, as this type of seal is very fragile. It is strictly forbidden to touch the elastomer sealin order to prevent any oil leaks once the seal is fitted to the engine.

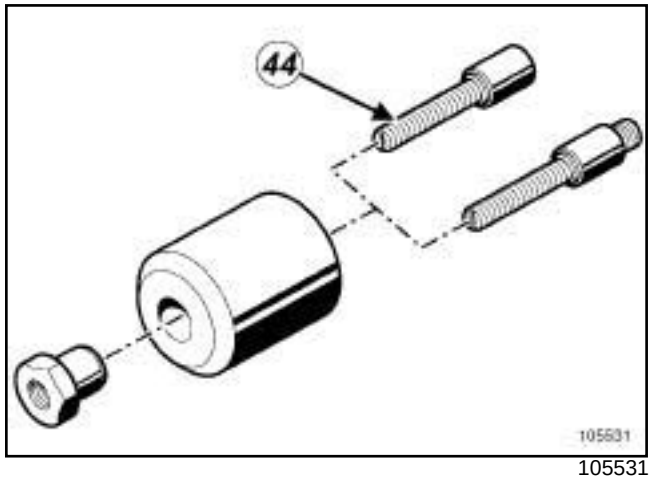

105531

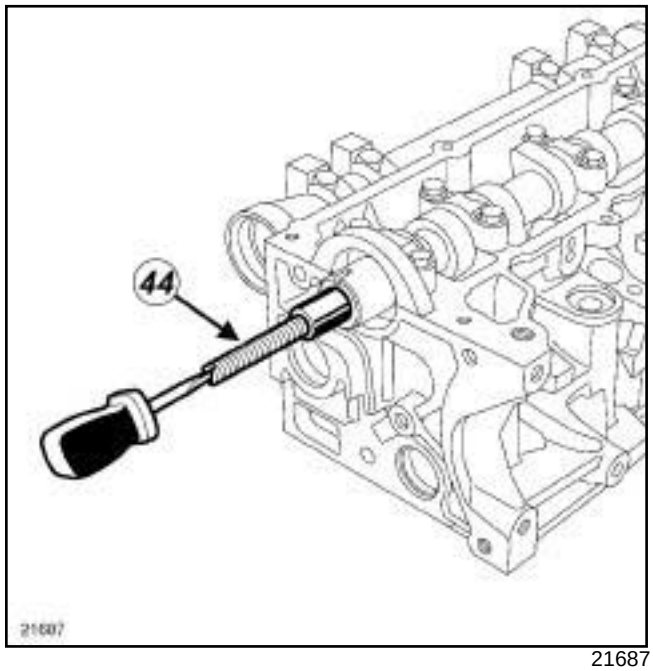

21687

❑ Screw the stud (**44**) of the **(Mot. 1632)** onto the camshaft.

K4M, and 760 or 761 or 812 or 813

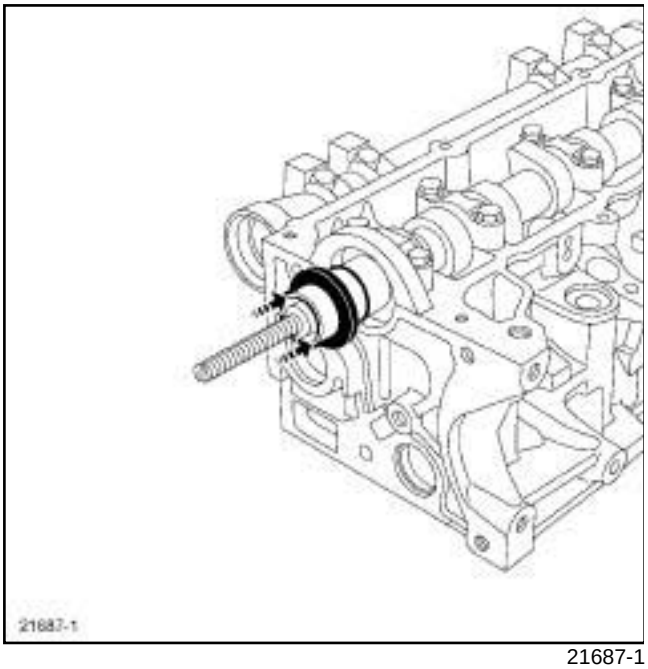

21687-1

❑ Fit the protector, with a seal, to the camshaft.

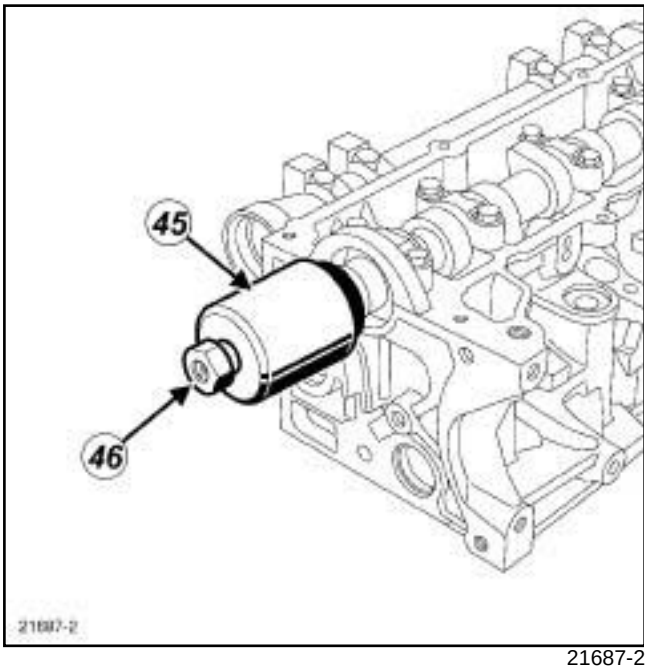

21687-2

❑ Fit the cover (**45**) and the collar nut (**46**) of the **(Mot. 1632)**.

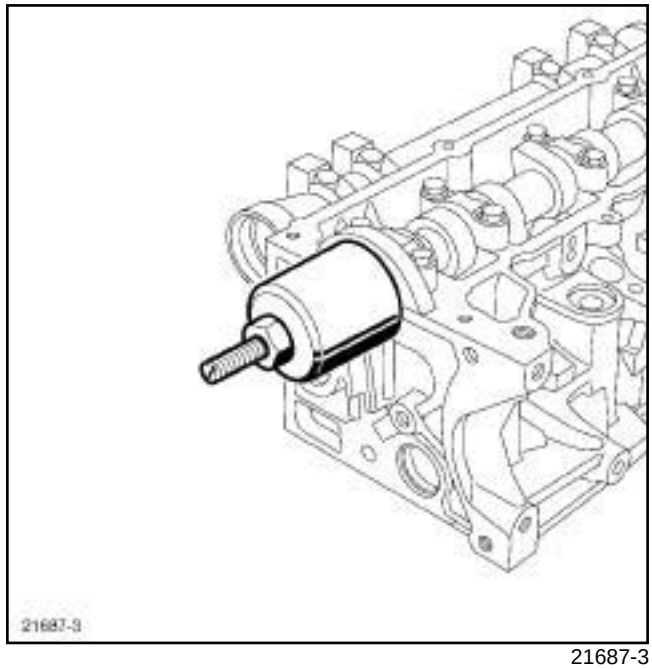

21687-3

❑ Screw in collar nut until the cover touches the cylinder head.

❑ Remove the nut, the cup, the protector and the threaded rod.

b - Fitting the inlet camshaft seal

❑

WARNING

It is very important to hold the protector when handling the seal, as this type of seal is very fragile. In order to prevent any oil leaks once the seal is fitted to the engine, it is strictly forbidden to touch the elastomer seal.

K4M, and 760 or 761 or 812 or 813

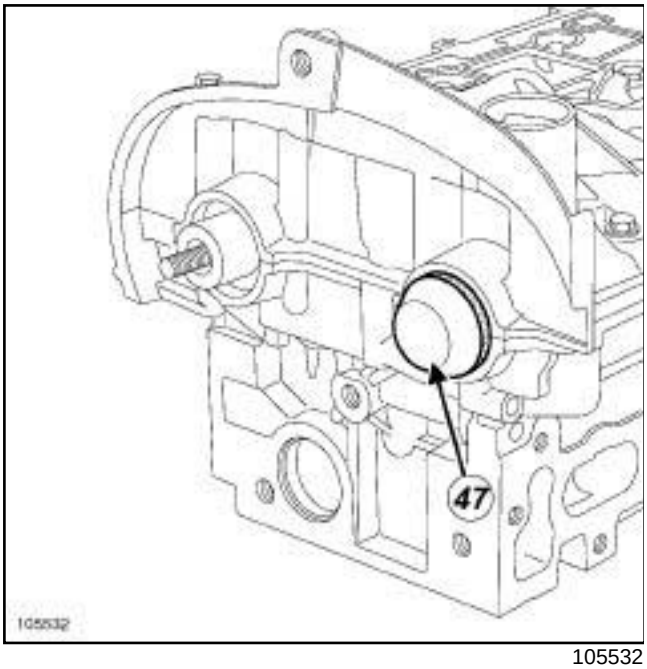

105532

- Fit the protector (**47**) ,with a seal, to the camshaft.
- Push the centre of the protector to force the seal into its housing.

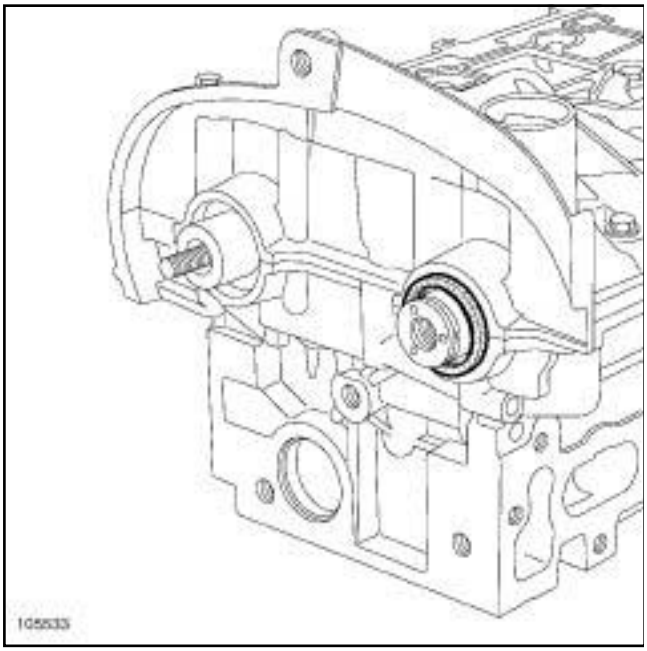

105533

- Remove the seal protector, taking care not to drop the seal.

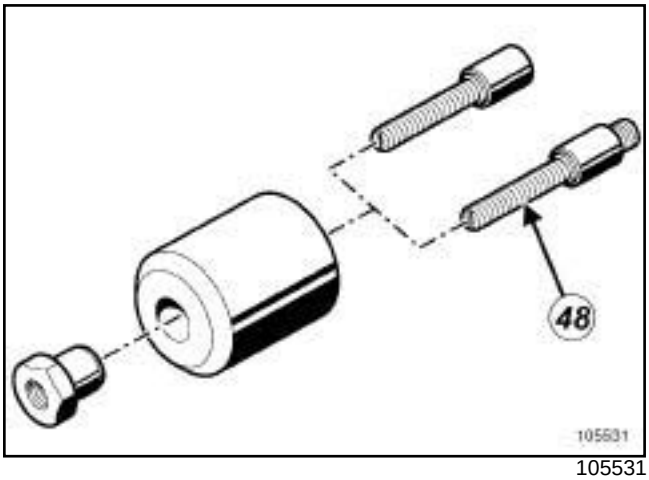

105531

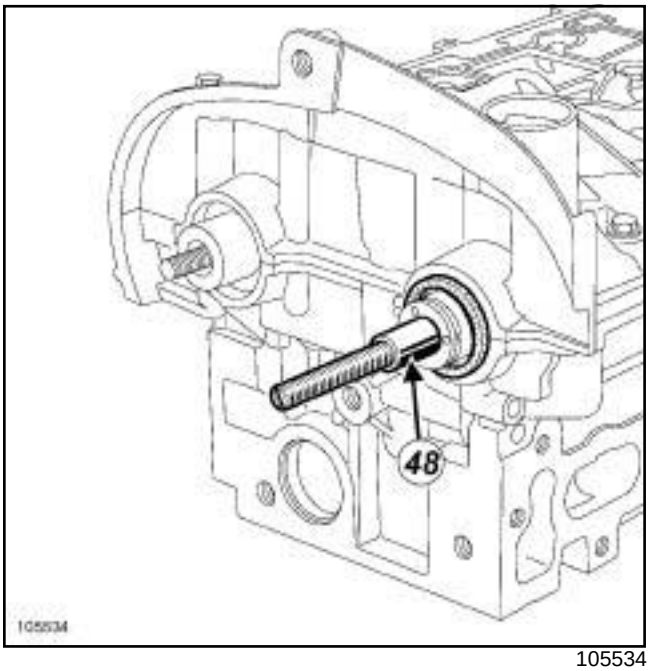

105534

- Screw the stud (**48**) of the **(Mot. 1632)** onto the camshaft.

K4M, and 760 or 761 or 812 or 813

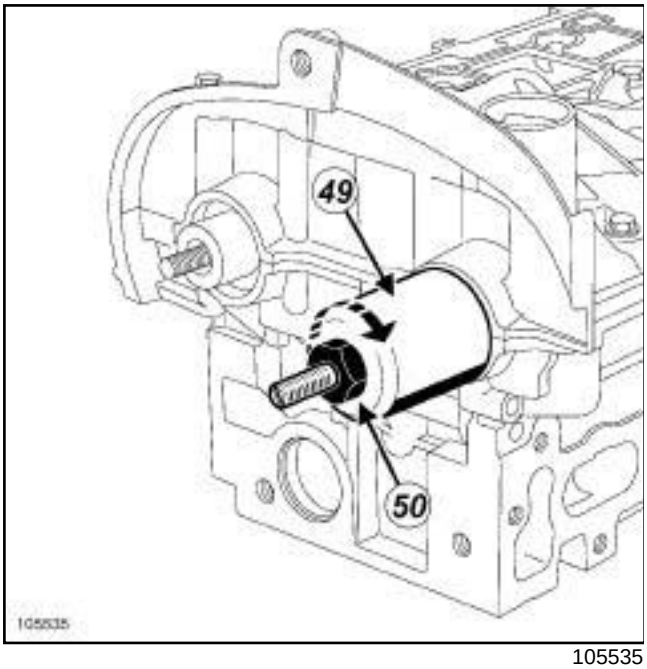

105535

- ❑ Fit the cover (**49**) and the collar nut (**50**) of the **(Mot. 1632)**.
- ❑ Screw on the collar nut until the cover touches the cylinder head.
- ❑ Remove the nut, the cup, the protector and the threaded rod.
- ❑ Refit the timing belt (see **11A**, **Top and front of engine**, **Timing belt: Removal - Refitting**, page **11A-18**) .

> **WARNING**
> Follow the second procedure in the timing belt refitting procedure.

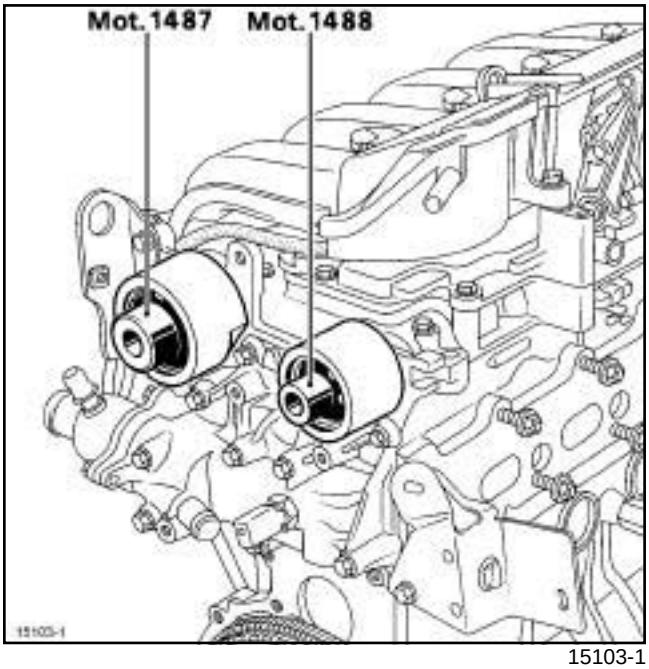

15103-1

- ❑ Refit:
  - the accessories belt (see **11A**, **Top and front of engine**, **Accessories belt: Removal - Refitting**, page **11A-4**) ,
  - new inlet camshaft sealing plugs using the **(Mot. 1487)**,
  - new exhaust camshaft sealing plugs using tool **(Mot. 1488)**,
- ❑ Proceed in the reverse order to removal.
- ❑ Refit:
  - the front bumper (see **Front bumper: Removal - Refitting**) (55A, Exterior protection),
  - the battery (see **Battery: Removal - Refitting**) (80A, Battery).
- ❑ Fill and bleed the cooling system (see **19A**, **Cooling**, **Cooling circuit: Draining - Refilling**, page **19A-15**) .
- ❑ Refit:
  - the engine undertray,
  - the engine covers.

F9Q, and 803 or 804 or 816 or 818

Essential special tooling	
Mot. 1672	Lower engine support.
Mot. 1453	Multiple-adjusting engine mounting support with retaining straps.
Mot. 1453-01	Additional winder nut on engine lift support Mot. 1453.
Mot. 1448	Long nose pliers for hose clips.

Essential equipment
workshop hoist
load balancer
diagnostic tool

Tightening torques ▽	
cylinder head bolts (initial torque)	**30 N.m**
cylinder head bolts	**230° ± 6°**
hollow bolt securing the turbocharger oil pipe to the turbocharger	**16 N.m**
hollow bolt securing the turbocharger oil pipe to the cylinder block	**44 N.m**
turbocharger oil pipe bolts	**25 N.m**
clips on the turbocharger air outlet pipe	**6 N.m**
exhaust gas intercooler clip	**5 N.m**
bolts for the exhaust gas recirculation pipe on the manifold	**18 N.m**
bolts for the exhaust gas recirculation pipe on the EGR solenoid valve	**18 N.m**
air filter box air outlet pipe clips	**6 N.m**

REMOVAL

I - REMOVAL PREPARATION OPERATION

❑ Position the vehicle on a two-post lift (see **Vehicle: Towing and lifting**) (02A, Lifting equipment).

❑ Remove:

- the engine covers,
- the battery (see **Battery: Removal - Refitting**) (80A, Battery),
- the front bumper (see **Front bumper: Removal - Refitting**) (55A, Exterior protection),
- the engine undertray.

❑ Drain the cooling system (see **19A**, **Cooling**, **Cooling circuit: Draining - Refilling**, page **19A-15**) .

F9Q, and 804

❑ Drain the gearbox (see **Manual gearbox oil: Draining - Refilling**) (21A, Manual gearbox).

❑ Remove:

- the front wheels (see **Wheel: Removal - Refitting**) (35A, Wheels and tyres),
- the accessories belt (see **11A**, **Top and front of engine**, **Accessories belt: Removal - Refitting**, page **11A-4**) ,
- the timing belt (see **11A**, **Top and front of engine**, **Timing belt: Removal - Refitting**, page **11A-18**) ,
- the catalytic pre-converter (see **19B**, **Exhaust**, **Catalytic pre-converter: Removal - Refitting**, page **19B-29**) ,
- the starter (see **16A**, **Starting - Charging**, **Starter: Removal - Refitting**, page **16A-21**) .

❑ Undo the clips on the air filter unit air outlet pipe.

❑ Disconnect:

- the oil decanter union on the sump,
- the oil decanter pipe on the sump.

❑ Position the **(Mot. 1672)**.

❑ Remove the **(Mot. 1453)** fitted with the **(Mot. 1453-01)**.

F9Q, and 803 or 804 or 816 or 818

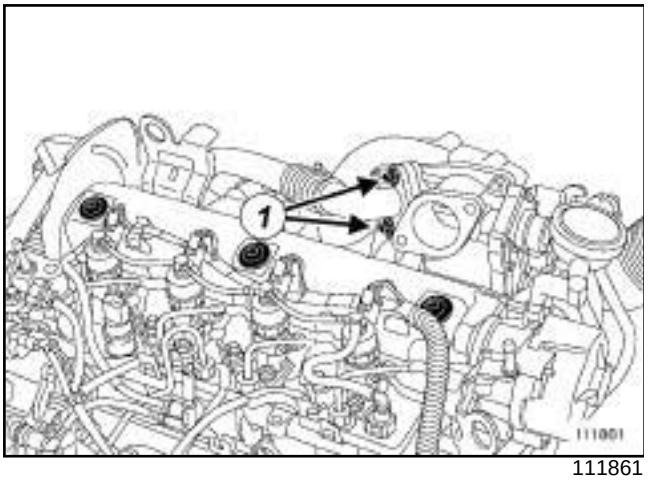

111861

❑ Remove the bolts (**1**) from the exhaust gas recirculation pipe on the EGR solenoid valve.

Snap-on clip

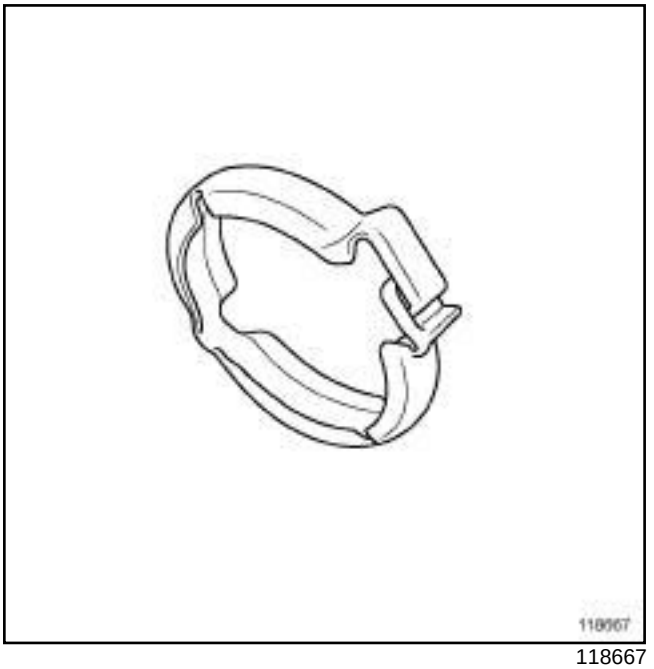

118667

Screw-in clip

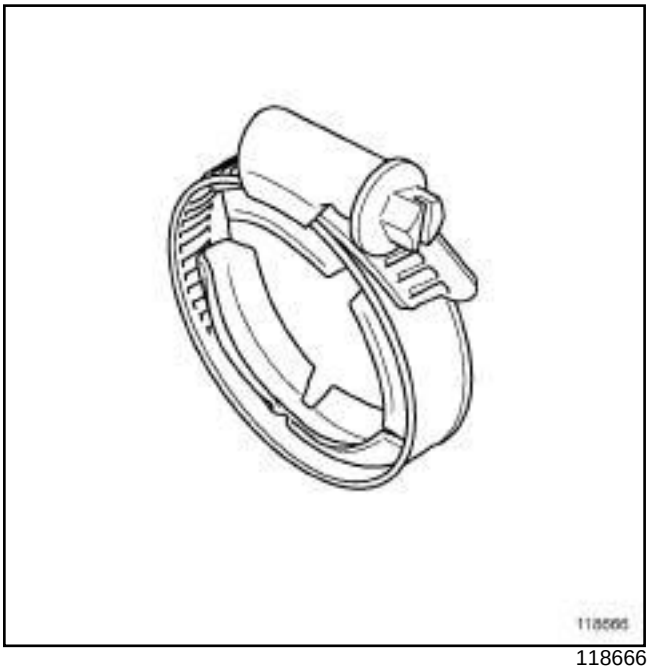

118666

❑

Note:

There are two types of clip fitted to the intercooler:

- the snap-on clip,

- the screw-in clip.

F9Q, and 803 or 804 or 816 or 818

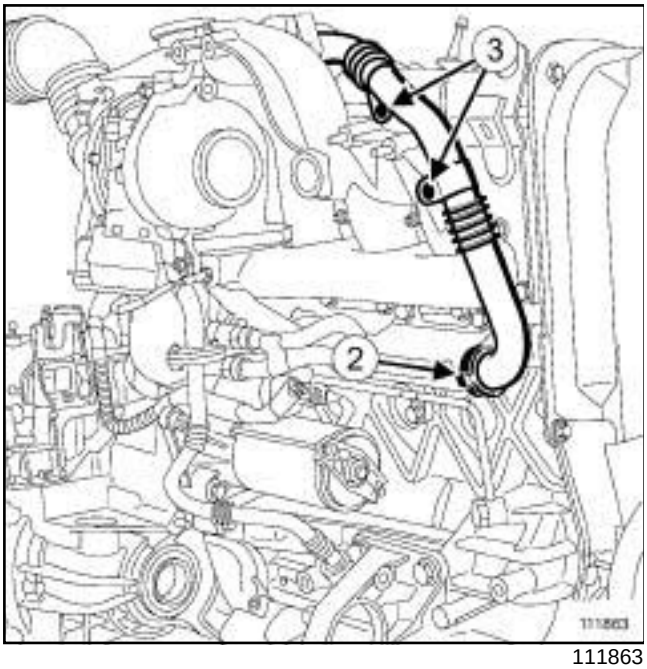

111863

❑ Remove:

- the clip (**2**) from the EGR pipe using the **(Mot. 1448)** (snap-on clip) or using a screwdriver (screw-in clip),
- the bolts (**3**) from the EGR pipe on the manifold,
- the EGR pipe,
- the intake duct (see **12A**, **Fuel mixture**, **Air inlet duct: Removal - Refitting**, page **12A-46**) ,
- the EGR unit (see **14A**, **Antipollution**, **Exhaust gas recirculation unit: Removal - Refitting**, page **14A-35**) ,
- the rail protector (see **13B**, **Diesel injection**, **Injector rail protector: Removal - Refitting**, page **13B-154**) ,
- the turbocharging pressure regulator solenoid valve from the air filter box.

❑ Move aside the clip of the turbocharger cooling pipe using the tool **(Mot. 1448)**.

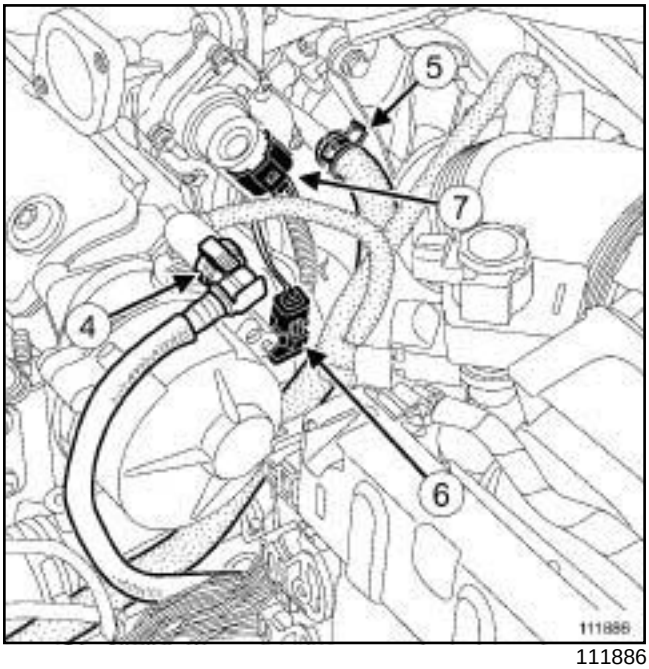

111886

❑ Disconnect:

- the brake servo pipe (**4**) on the vacuum pump,
- the turbocharger cooling pipe (**5**) ,
- the connector (**6**) from the exhaust gas temperature sensor,
- the coolant temperature sensor connector,
- the connector (**7**) from the EGR solenoid valve,
- the heater plug connectors,
- the high pressure pump fuel pressure regulator connector,
- the diesel temperature sensor connector.

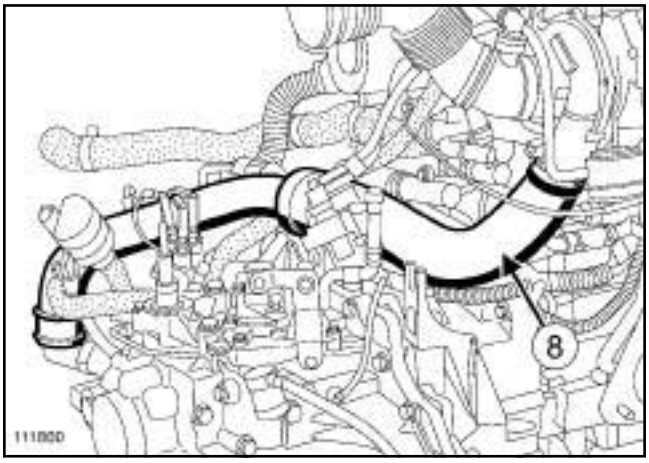

111860

❑ Undo the clips on the turbocharger air outlet pipe.

❑ Remove the turbocharger outlet air pipe (**8**) .

F9Q, and 803 or 804 or 816 or 818

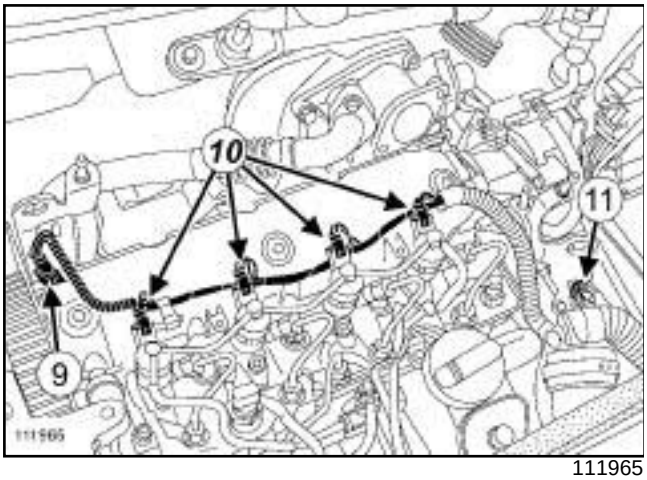

111965

- ❑ Disconnect:
  - the connector (**9**) from the camshaft position sensor,
  - the connectors (**10**) from the injectors.
- ❑ Remove the wiring nut (**11**) .
- ❑ Unclip the wiring harness from the rocker cover.
- ❑ Move aside the wiring.
- ❑ Disconnect the fuel supply and return unions on the high pressure pump.
- ❑ Unclip the fuel pipes and the wiring from the high pressure pump.
- ❑ Remove:
  - the bolt from the camshaft position sensor,
  - the camshaft position sensor.
- ❑ Move aside the water chamber pipe clips using the tool **(Mot. 1448)**.
- ❑ Disconnect the water chamber cooling pipes.
- ❑ Remove:
  - the oil decanter bolts,
  - the oil decanter,
  - the front right-hand driveshaft (see **Front right-hand wheel driveshaft: Removal - Refitting**) (29A, Driveshafts).

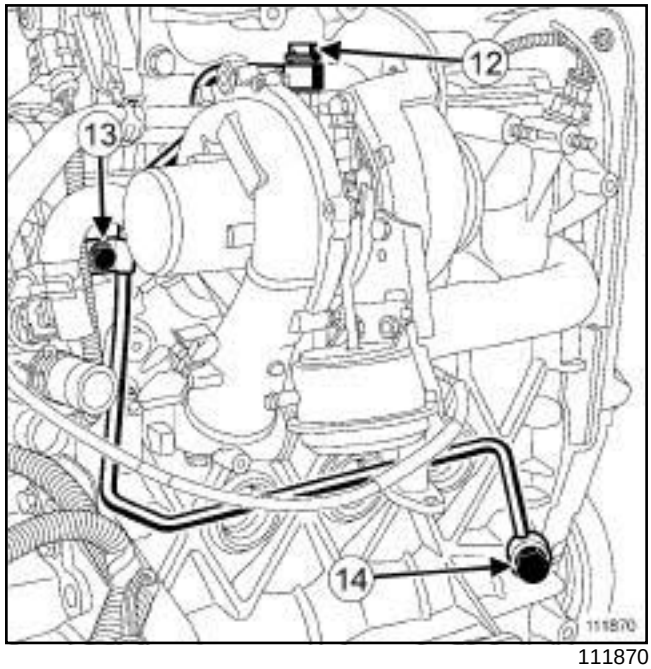

111870

- ❑ Remove:
  - the hollow bolt (**12**) mounting the turbocharger oil pipe on the turbocharger,
  - the turbocharger oil pipe bolts (**13**) ,
  - the hollow bolt (**14**) mounting the turbocharger oil pipe on the cylinder block,
  - the turbocharger oil pipe.

F9Q, and 803 or 804 or 816 or 818

II - OPERATION FOR REMOVAL OF PART CONCERNED

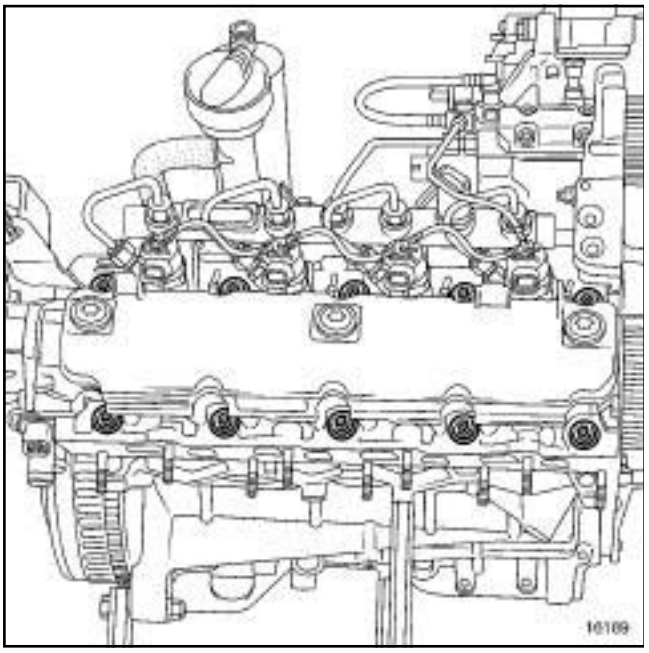

16189

- ❑ Remove the cylinder head bolts.
- ❑ Recover the stem caps for the bolts on the cylinder head.
- ❑ Remove the cylinder head using a **workshop hoist** and a **load balancer**.

REFITTING

I - REFITTING PREPARATION OPERATION

- ❑ **parts always to be replaced: cylinder head bolts (10,02,01,14)**.
- ❑ **parts always to be replaced: Cylinder head gasket (10,02,01,04)**.

1 - CLEANING

- ❑ Clean the cylinder head.

> **WARNING**
> Do not scrape the joint faces of the aluminium, any damage caused to the joint face will result in a risk of leaks.

- ❑ Clean the joint faces with **SUPER CLEANER FOR JOINT FACES** (see **Vehicle: Parts and ingredients for the repairwork**) (04B, Consumables - Products) to dissolve any part of the seal still remaining on the sump and cylinder block.
- ❑ Apply the product to the part to be cleaned, wait approximately ten minutes then remove the residue with a wooden spatula.

> **WARNING**
> Do not allow this product to drip onto the paintwork.
>
> Clean the cylinder head carefully to avoid any foreign bodies entering the oil return and supply pipes.
>
> Failure to follow this advice could lead to the blocking of the various oil inlet galleries, which would quickly result in engine damage.

> **WARNING**
> Protect the oilway so that foreign bodies do not enter the oil pipes in the cylinder head.
>
> Failure to follow this instruction could lead to the blocking of the oilways, resulting in a rapid deterioration of the camshaft.

2 - CHECKING THE GASKET FACE

- ❑ Check for gasket face deformation using a ruler and a set of shims.

  The maximum deformation is **0.05 mm**.

> **WARNING**
> No regrinding of the cylinder head is permitted.

- ❑ For the cylinder head stripping procedure (see **Cylinder head: Dismantling**) (Technical Note 6007A, 10A, Engine and cylinder block assembly).

II - REFITTING OPERATION FOR PART CONCERNED

- ❑ Using a syringe, extract any oil which may have entered the cylinder head holes.

F9Q, and 803 or 804 or 816 or 818

❑ Refit:

- a new cylinder head gasket,
- the cylinder head using a **workshop hoist** and a **load balancer**.

Note:

During this operation, be careful not to damage the windscreen.

WARNING

To ensure proper sealing, the gasket surfaces must be clean, dry and not greasy (avoid any finger marks).

❑ Refit the stem caps for the bolts on the cylinder head.

WARNING

In order to ensure that the bolts are correctly tightened, use a syringe to remove any oil which may be in the cylinder head mounting holes.

CYLINDER HEAD TIGHTENING PROCEDURE

❑ Refit the new cylinder head bolts.

WARNING

Do not oil the new bolts. Be sure to oil bolts being reused.

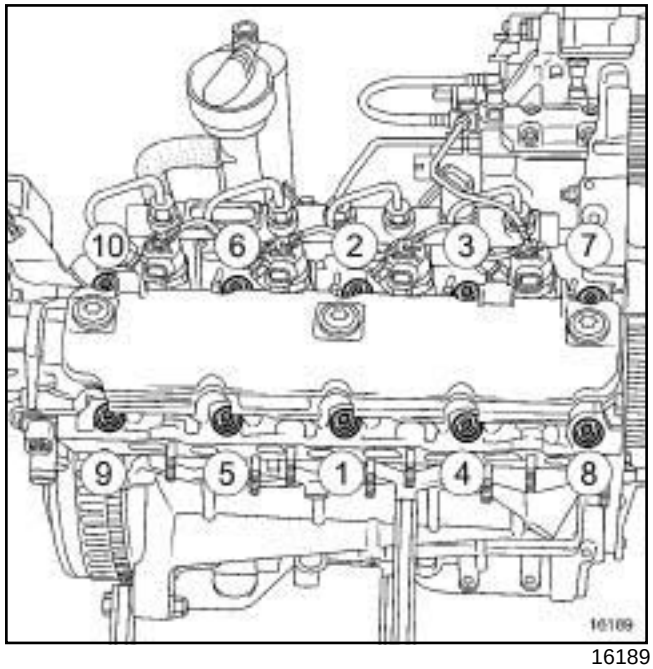

16189

❑ Tighten to torque and in order the **cylinder head bolts (initial torque) (30 N.m)**.

❑ Check that all of the cylinder head mounting bolts are tightened to the correct torque **(30 N.m)**.

❑ Angle tighten in order the **cylinder head bolts (230° ± 6°)**.

WARNING

Do not retighten the cylinder head bolts after applying this procedure.

III - FINAL OPERATION

❑ Refit:

- the oil separator,
- the oil decanter bolts,
- a new turbocharger oil supply pipe.

❑ Fit without tightening:

- the hollow bolt to the turbocharger oil pipe on the turbocharger,
- the turbocharger oil pipe bolts,
- the hollow bolt to the turbocharger oil pipe on the cylinder block.

❑ Torque tighten:

- the **hollow bolt securing the turbocharger oil pipe to the turbocharger (16 N.m)**,
- the **hollow bolt securing the turbocharger oil pipe to the cylinder block (44 N.m)**,

F9Q, and 803 or 804 or 816 or 818

- the **turbocharger oil pipe bolts (25 N.m)**.

❑ Refit:

- the front right-hand driveshaft (see **Front right-hand wheel driveshaft: Removal - Refitting**) (29A, Driveshafts),
- the camshaft position sensor,
- the camshaft position sensor bolt.

❑ Connect:

- the oil decanter union on the sump,
- the oil decanter hose on the sump,
- the injector connectors,
- the camshaft sensor connector.

❑ Clip the wiring onto the rocker cover.

❑ Connect:

- the heater plug connectors,
- the high pressure pump fuel pressure regulator connector,
- the fuel supply and return unions on the high pressure pump.

❑ Clip the fuel pipes and the wiring onto the high pressure pump.

❑ Fit the wiring into its housing.

❑ Refit:

- the wiring nut,
- the turbocharger air outlet pipe.

❑ Torque tighten the **clips on the turbocharger air outlet pipe (6 N.m)**.

❑ Connect:

- the diesel temperature sensor connector.
- the connector for the temperature sensor upstream of the turbocharger,
- the exhaust gas recirculation solenoid valve connector,
- the coolant temperature sensor connector,
- the cooling hoses to the water chamber,
- the turbocharger cooling hose.

❑ Fit the cooling pipe clips using the tool **(Mot. 1448)**.

❑ Connect the brake servo pipe onto the vacuum pump.

❑ Refit:

- the turbocharging pressure regulator solenoid valve on the air filter box,
- the injector rail protector (see **13B**, **Diesel injection**, **Injector rail protector: Removal - Refitting**, page **13B-154**) ,
- the EGR unit (see **14A**, **Antipollution**, **Exhaust gas recirculation unit: Removal - Refitting**, page **14A-35**) ,
- the air inlet duct (see **12A**, **Fuel mixture**, **Air inlet duct: Removal - Refitting**, page **12A-46**) ,
- the EGR pipe fitted with a new seal.

❑ Fit without tightening:

- the bolts to the exhaust gas recirculation pipe on the manifold,
- the bolts to the exhaust gas recirculation pipe on the EGR solenoid valve.

❑ Refit the clip on the exhaust gas cooler.

❑ Torque tighten:

- the **exhaust gas intercooler clip (5 N.m)** (screw-in clip),
- the **bolts for the exhaust gas recirculation pipe on the manifold (18 N.m)**,
- the **bolts for the exhaust gas recirculation pipe on the EGR solenoid valve (18 N.m)**.

❑ Fit the **(Mot. 1453)** fitted with the **(Mot. 1453-01)**.

❑ Remove the tool **(Mot. 1672)**.

❑ Refit the air outlet pipe onto the air filter unit.

❑ Torque tighten the **air filter box air outlet pipe clips (6 N.m)**.

❑ Refit:

- the starter (see **16A**, **Starting - Charging**, **Starter: Removal - Refitting**, page **16A-21**) ,
- the catalytic pre-converter (see **19B**, **Exhaust**, **Catalytic pre-converter: Removal - Refitting**, page **19B-29**) ,
- the timing belt (see **11A**, **Top and front of engine**, **Timing belt: Removal - Refitting**, page **11A-18**) ,
- the accessories belt (see **11A**, **Top and front of engine**, **Accessories belt: Removal - Refitting**, page **11A-4**) ,
- the front wheels (see **Wheel: Removal - Refitting**) (35A, Wheels and tyres),
- the front bumper (see **Front bumper: Removal - Refitting**) (55A, Exterior protection),
- the battery (see **Battery : Removal - Refitting**) (80A, Battery).

F9Q, and 803 or 804 or 816 or 818

- ❑ Fill and bleed the cooling circuit (see **19A**, **Cooling**, **Cooling circuit: Draining - Refilling**, page **19A-15**) .
- ❑ Prime the fuel circuit using the manual priming pump.

F9Q, and 804

- ❑ Fill the gearbox (see **Manual gearbox oil: Draining - Refilling**) (21A, Manual gearbox).

- ❑ Check:
  - that there are no leaks; deal with any leaks if necessary,
  - using the **diagnostic tool**, that there are no stored faults in the computers; deal with any faults and clear them if necessary.
- ❑ Refit:
  - the engine undertray,
  - the engine covers.

B84 or C84 or E84 or K84 or L84, and F9Q, and 800 or 808

Essential special tooling	
Mot. 1672	Lower engine support.
Mot. 1453	Multiple-adjusting engine mounting support with retaining straps.
Mot. 1453-01	Additional winder nut on engine lift support Mot. 1453.
Mot. 1448	Long nose pliers for hose clips.

Essential equipment
diagnostic tool
cylinder head rule
set of feeler gauges
cylinder head testing tool

Tightening torques ▽	
cylinder head bolts (initial torque)	**30 N.m**
cylinder head bolts	**230° ± 6°**
oil supply pipe bolt on the turbocharger	**23 N.m**
oil supply pipe bolt on the cylinder block	**23 N.m**
oil return pipe bolts	**12 N.m**

IMPORTANT

Before any operation:

- connect the **diagnostic tool**,
- establish dialogue with the injection computer,
- check that the injection rail is depressurised,
- watch out for the fuel temperature,
- order the special high pressure injection circuit plug kit.

IMPORTANT

To avoid any risk of damaging the systems, apply the safety and cleanliness instructions and operation recommendations before carrying out the repair (see **13B**, **Diesel injection**, **Diesel injection: Precautions for repair**, page **13B-12**) (**13B, Diesel injection, Cleanliness instructions**).

REMOVAL

I - REMOVAL PREPARATION OPERATION

❑ Position the vehicle on a two-post lift (see **Vehicle: Towing and lifting**) (02A, Lifting equipment).

❑ Remove:

- the engine covers,
- the engine undertray.
- the battery, (see **Battery : Removal - Refitting**) (80A, Battery),
- the battery tray,
- the accessories belt (see **11A**, **Top and front of engine**, **Accessories belt: Removal - Refitting**, page **11A-4**) ,
- the timing belt (see **11A**, **Top and front of engine**, **Timing belt: Removal - Refitting**, page **11A-18**) ,
- the front bumper (see **Front bumper: Stripping - Rebuilding**) (55A, Exterior protection).

❑ Drain the engine cooling system (see **19A**, **Cooling**, **Cooling circuit: Draining - Refilling**, page **19A-15**) .

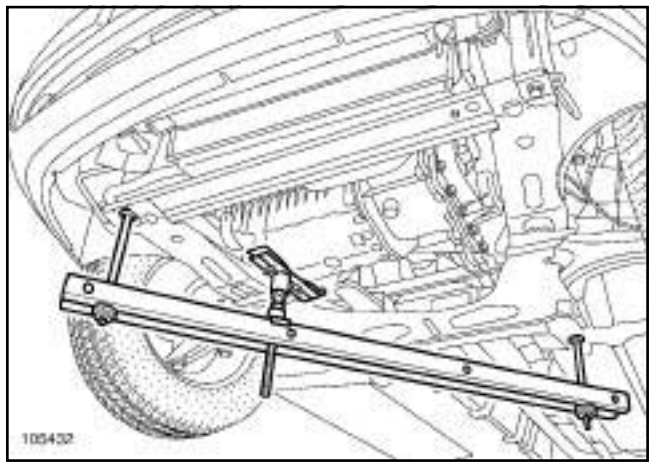

105432

❑ Fit the engine support **(Mot. 1672)**.

❑ Remove the **(Mot. 1453)** then the **(Mot. 1453-01)**.

B84 or C84 or E84 or K84 or L84, and F9Q, and 800 or 808

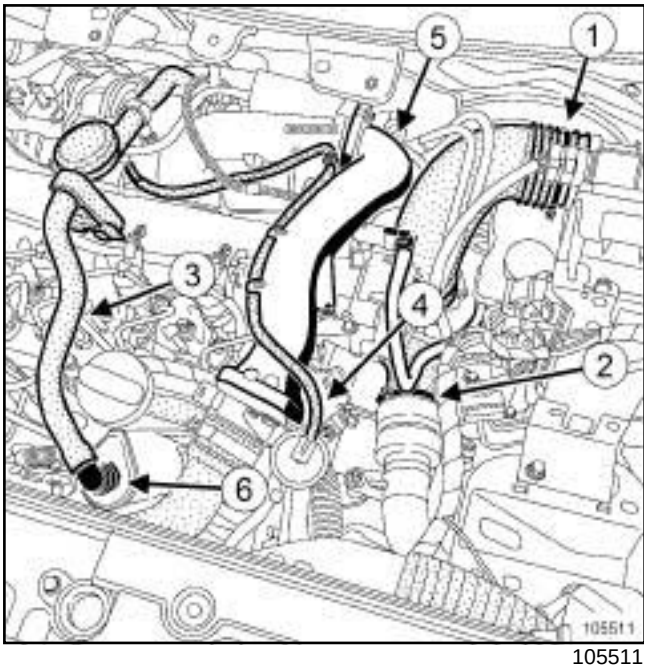

105511

❑ Disconnect:

- the air filter outlet duct (**1**) ,
- the air duct (**2**) to the turbocharger,
- the oil vapour rebreathing pipe (**3**) ,
- the engine damper flap valve pipe (**4**) .

❑ Remove:

- the air duct (**5**) on the inlet manifold,
- the oil vapour rebreather tank (**6**) .

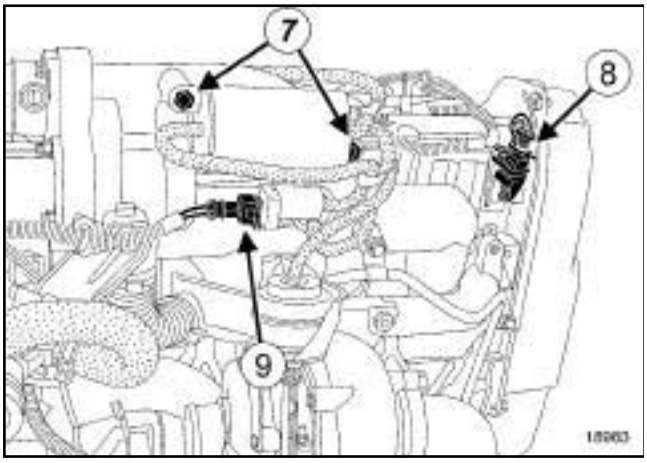

18983

❑ Remove the vacuum tank bolts (**7**) .

❑ Disconnect:

- the turbocharger pressure regulation solenoid valve pipes,
- the engine damper flap solenoid valve connector ***(8)*** ,
- the camshaft sensor connector ***(9)*** .

❑ Remove the vacuum tank.

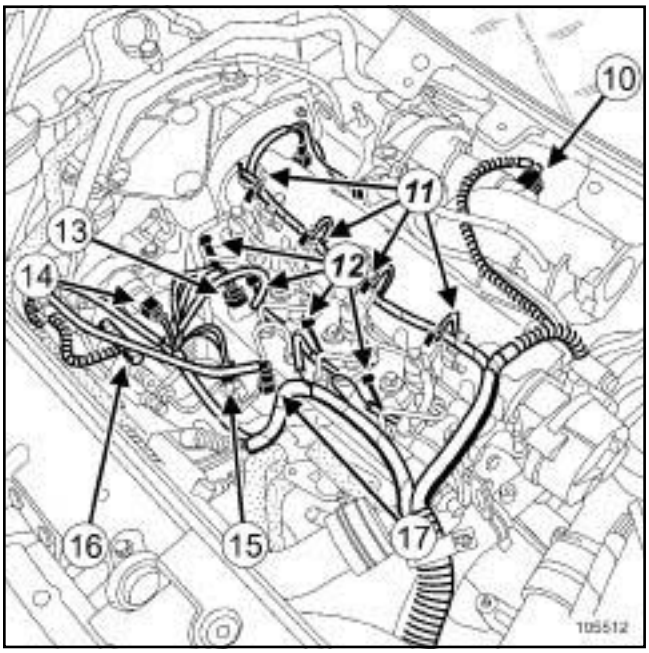

105512

❑ Disconnect:

- the exhaust gas recirculation solenoid valve connector (**10**) ,
- the diesel injector connectors (**11**) ,
- the heater plug connectors (**12**) ,
- the rail pressure sensor connector (**13**) ,
- the high pressure pump pressure regulator connector (**14**) ,
- the diesel return temperature sensor connector (**15**) ,
- the diesel filter connector,
- the diesel supply pipe (**16**) ,
- the diesel return pipe (**17**) .

❑ Insert the blanking plugs.

❑ Move aside the wiring.

B84 or C84 or E84 or K84 or L84, and F9Q, and 800 or 808

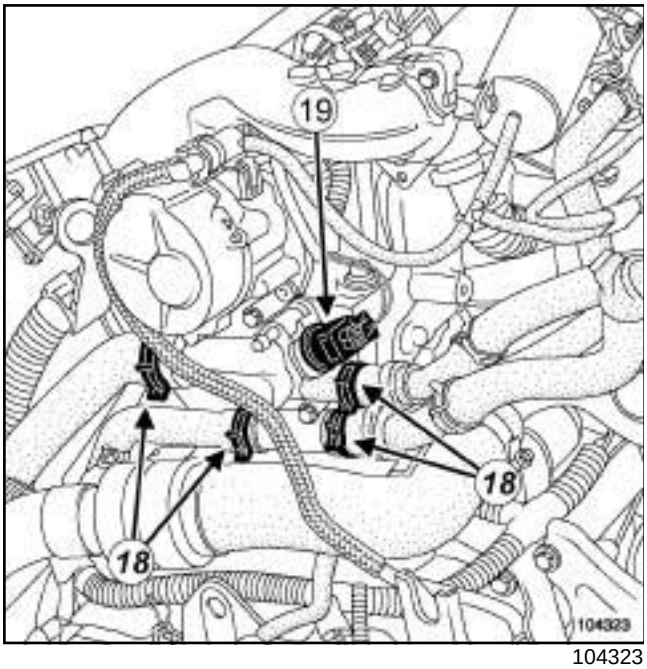

104323

❑ Disconnect:

- the cylinder head outlet water chamber hoses at (**18**) using the tool **(Mot. 1448)**,
- the connector (**19**) from the coolant temperature sensor.

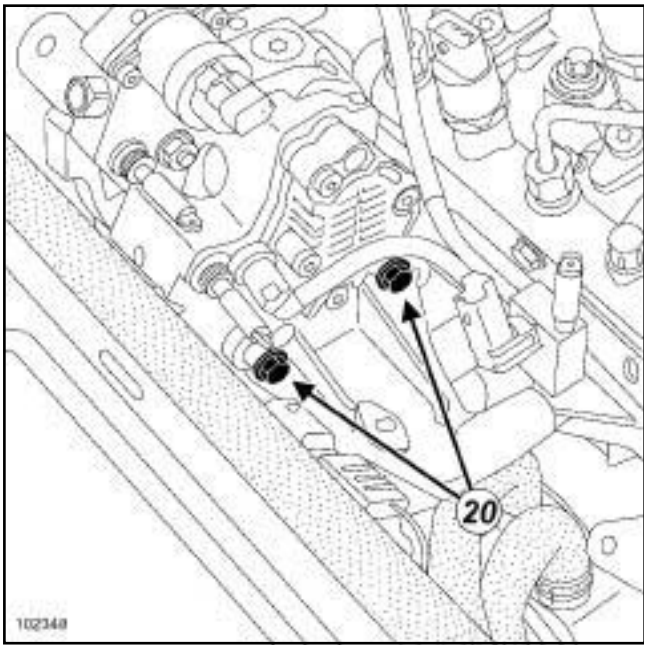

102348

❑ Remove the high pressure pump mounting bolts (**20**) .

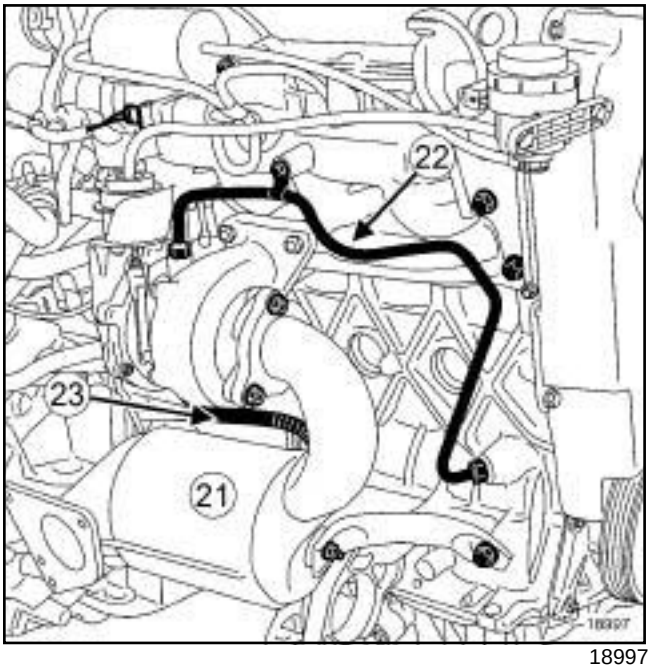

18997

❑ Remove:

- the catalytic converter (**21**) (see **19B**, **Exhaust**, **Catalytic converter: Removal - Refitting**, page **19B-46**) ,
- the oil supply pipe (**22**) ,
- the oil return pipe mountings (**23**) on the turbocharger.

B84 or C84 or E84 or K84 or L84, and F9Q, and 800 or 808

II - OPERATION FOR REMOVAL OF PART CONCERNED

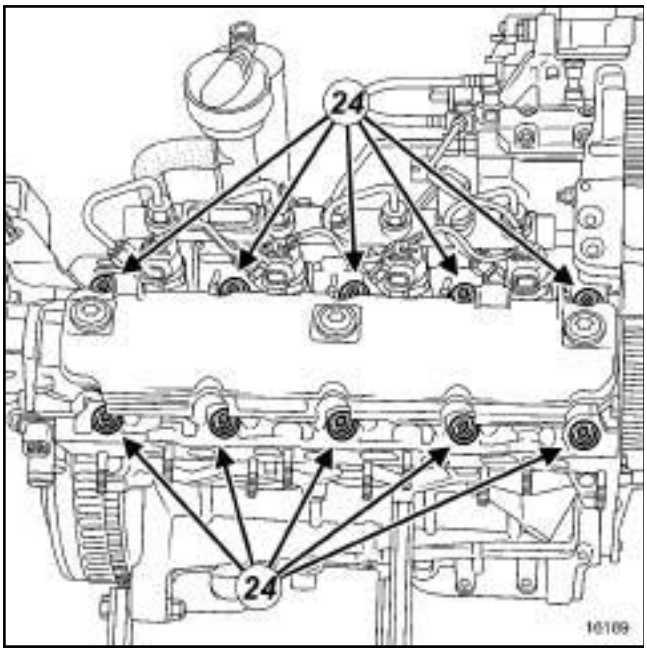

16189

❑ Remove the bolts (**24**) from the cylinder head.

> Note:
>
> When removing the cylinder head, take care not to cause any damage to its gasket face as it passes the turbocharger above it.

❑ Remove the cylinder head.

> Note:
>
> This operation requires two people.

❑ Remove the cylinder head seal.

REFITTING

I - REFITTING PREPARATION OPERATION

1 - Precautions for refitting

❑

> **IMPORTANT**
>
> Wear goggles with side protectors for this operation.

> **IMPORTANT**
>
> Wear protective gloves during the operation.

❑

> **WARNING**
>
> Do not scrape the joint faces of the aluminium, any damage caused to the joint face will result in a risk of leaks.

> **WARNING**
>
> Do not allow this product to drip onto the paintwork.
>
> Clean the cylinder head carefully to avoid any foreign bodies entering the oil return and supply pipes.
>
> Failure to follow this advice could lead to the blocking of the various oil inlet galleries, which would quickly result in engine damage.

> **WARNING**
>
> Do not oil the new bolts. Be sure to oil bolts being reused.

> **WARNING**
>
> No regrinding of the cylinder head is permitted.

> **WARNING**
>
> In order to ensure that the bolts are correctly tightened, use a syringe to remove any oil which may be in the cylinder head mounting holes.

2 - Cleaning

❑ Clean the joint faces with **SUPER CLEANING AGENT FOR JOINT FACES** (see **Vehicle: Precautions for repair**) (04B, Consumables - Products) to dissolve any part of the seal still adhering.

❑ Apply the product to the part to be cleaned, wait approximately ten minutes then remove the residue with a wooden spatula.

3 - Checking the gasket face

❑ Check with a **cylinder head rule** and a **set of feeler gauges** to determine if the gasket face is deformed.

The maximum deformation is **0.05 mm**.

> **WARNING**
>
> No regrinding of the cylinder head is permitted.

B84 or C84 or E84 or K84 or L84, and F9Q, and 800 or 808

❑ Test the cylinder head to detect any possible cracks using the **cylinder head testing tool** (see **Cylinder head testing equipment: Use**) **(Technical Note 6026A)**.

II - REFITTING OPERATION FOR PART CONCERNED

❑ Bring the pistons to mid-stroke position to prevent any risk of contact with the valves when tightening the cylinder head.

❑ Refit:

- the cylinder head gasket,
- the cylinder head,
- the cylinder head bolts.

Note:

Pay attention to the centring dowels.

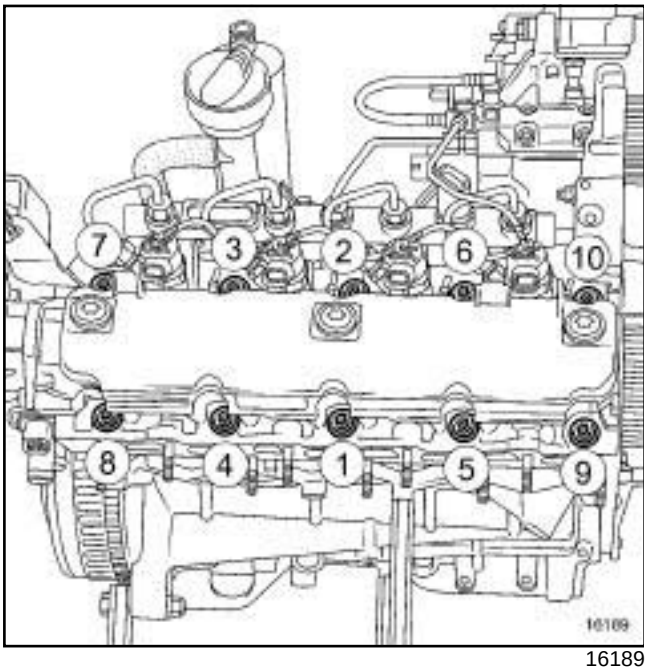

16189

❑ Pretighten to torque and in order the **cylinder head bolts (initial torque) (30 N.m)**.

❑ Check that all of the cylinder head bolts are tightened to the correct torque.

❑ Angle tighten in order the **cylinder head bolts (230° ± 6°)**.

III - FINAL OPERATION

❑ Refit:

- the oil supply pipe,
- the oil return pipe.

❑ Torque tighten:

- the **oil supply pipe bolt on the turbocharger (23 N.m)**,
- the **oil supply pipe bolt on the cylinder block (23 N.m)**,
- the **oil return pipe bolts (12 N.m)**.

❑ Refit:

- the catalytic converter (see **19B**, **Exhaust**, **Catalytic converter: Removal - Refitting**, page **19B-46**) ,
- the high pressure pump mounting bolts ***(20)*** .

❑ Connect:

- the coolant temperature sensor connector ***(19)*** ,
- the cylinder head outlet water chamber hoses at ***(18)*** using the tool **(Mot. 1448)**.

❑ Fit the wiring.

❑ Remove the blanking plugs.

❑ Connect:

- the diesel return pipe ***(17)*** ,
- the diesel supply pipe ***(16)*** ,
- the diesel filter connector,
- the diesel return temperature sensor connector ***(15)*** ,
- the high pressure pump pressure regulator connector ***(14)*** ,
- the rail pressure sensor connector ***(13)*** ,
- the heater plug connectors ***(12)*** ,
- the injector connectors ***(11)*** ,
- the exhaust gas recirculation solenoid valve connector ***(10)*** .

❑ Refit the vacuum tank.

❑ Connect:

- the camshaft sensor connector ***(9)*** ,
- the engine damper flap solenoid valve connector ***(8)*** ,
- the turbocharger pressure regulation solenoid valve pipes.

❑ Refit:

- the vacuum tank bolts ***(7)*** ,
- the oil vapour rebreather tank ***(6)*** ,
- the air duct ***(5)*** on the inlet manifold.

B84 or C84 or E84 or K84 or L84, and F9Q, and 800 or 808

- Disconnect:
  - the engine damper flap valve pipe ***(4)*** ,
  - the oil vapour rebreathing pipe ***(3)*** ,
  - the air duct ***(2)*** to the turbocharger,
  - the air filter outlet duct ***(1)*** .
- Refit the tool **(Mot. 1453)** and the tool **(Mot. 1453-01)**.
- Remove the engine stand **(Mot. 1672)**.
- Refit:
  - the front bumper (see **Front bumper: Stripping - Rebuilding**) (55A, Exterior protection),
  - the timing belt (see **11A**, **Top and front of engine**, **Timing belt: Removal - Refitting**, page **11A-18**) ,
  - the accessories belt (see **11A**, **Top and front of engine**, **Accessories belt: Removal - Refitting**, page **11A-4**) .
- Fill and bleed the engine cooling system (see **19A**, **Cooling**, **Cooling circuit: Draining - Refilling**, page **19A-15**) .
- Refit:
  - the engine undertray,
  - the battery tray,
  - the battery (see **Battery: Removal - Refitting**) (80A, Battery),
  - the engine covers.
- Reprime the diesel circuit (see **13A**, **Fuel supply**, **Manual priming pump: Removal - Refitting**, page **13A-5**) (13A, Fuel supply).

M9R

Essential special tooling	
Mot. 1431	Flywheel locking tool.

Tightening torques ▽	
cylinder head bolts (initial torque)	**5 N.m**
cylinder head bolts (final torque)	**30 N.m + 300° ± 6°**

REMOVAL

I - REMOVAL PREPARATION OPERATION

❑

WARNING

It is strictly forbidden to apply any pressure to the engine oil sump. Damage to the sump will irreparably damage the engine by:

- blocking the strainer,
- raising the oil level above maximum, with a risk of engine racing.

Note:

Consult the safety and cleanliness advice and operation recommendations before carrying out any repair (see **Engine: Precautions for repair**) .

❑ Remove:

- the engine - gearbox assembly (see **10A**, **Engine and cylinder block assembly**, **Engine/gearbox assembly: Removal - Refitting**, page **10A-97**) ,
- the EGR pipe at the EGR cooler inlet (see **14A**, **Antipollution**, **Exhaust gas recirculation rigid pipe: Removal - Refitting**, page **14A-95**) .

❑ Place the engine on the component support (see **Engine support equipment: Use**) .

❑ Drain the engine (see **10A**, **Engine and cylinder block assembly**, **Engine oil: Draining - Refilling**, page **10A-43**) .

❑ Remove:

- the accessories belt (see **11A**, **Top and front of engine**, **Accessories belt: Removal - Refitting**, page **11A-4**) ,
- the coolant pump (see **19A**, **Cooling**, **Water pump: Removal - Refitting**, page **19A-29**) .

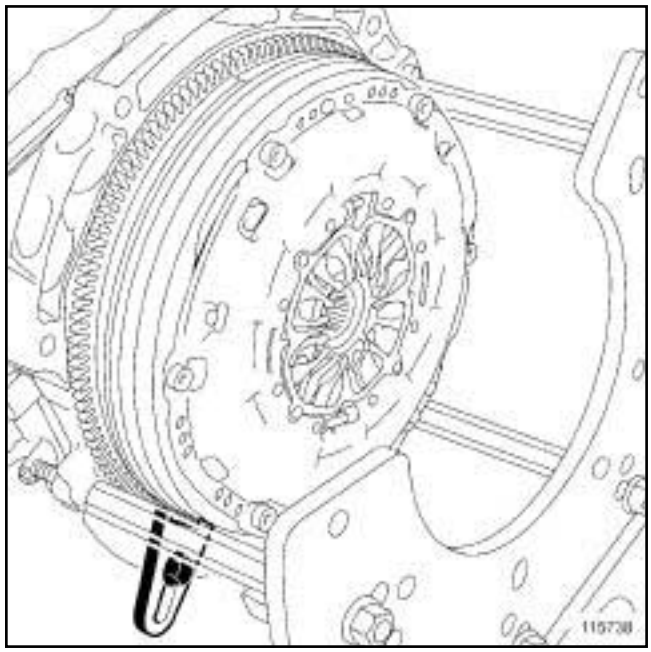

115738

❑ Fit the flywheel locking tool **(Mot. 1431)** onto the cylinder block.

❑ Remove:

- the crankshaft accessories pulley (see **11A**, **Top and front of engine**, **Crankshaft accessories pulley: Removal - Refitting**, page **11A-11**) ,
- the flywheel locking tool **(Mot. 1431)**,
- the crankshaft seal on the timing side (see **10A**, **Engine and cylinder block assembly**, **Crankshaft seal at timing end Removal - Refitting**, page **10A-1**) ,
- the timing chain (see **11A**, **Top and front of engine**, **Timing chain: Removal - Refitting**, page **11A-147**) .

M9R, and 721 or 722 or 724

❑ Remove the exhaust gas pressure sensor (see **19B**, **Exhaust**, **Exhaust gas pressure sensor: Removal - Refitting**, page **19B-112**) .

❑ Remove:

- the damper valve (see **12A**, **Fuel mixture**, **Air inlet flap: Removal - Refitting**, page **12A-33**) ,
- Depending on the version, the catalytic pre-converter or the catalytic converter at the turbocharger outlet (see **19B**, **Exhaust**, **Catalytic pre-conver-**

ter: Removal - Refitting, page **19B-29**) or (see **19B**, **Exhaust**, **Catalytic converter: Removal - Refitting**, page **19B-46**) ,

- the turbocharger oil pipes (see **12B**, **Turbocharging**, **Turbocharger oil pipe: Removal - Refitting**, page **12B-52**) .

❑ Remove:

- the vacuum pump (see **Vacuum pump: Removal - Refitting**) ,
- the high pressure pipe between the pump and the rail (see **13B**, **Diesel injection**, **High-pressure pipe between the pump and rail: Removal - Refitting**, page **13B-160**) ,
- the oil separator (see **11A**, **Top and front of engine**, **Oil decanter: Removal - Refitting**, page **11A-301**) ,
- the diesel return rail (see **13B**, **Diesel injection**, **Diesel injector fuel return rail: Removal - Refitting**, page **13B-148**) ,
- the high pressure pipes between the rail and the injectors (see **13B**, **Diesel injection**, **High-pressure pipe between the rail and injector: Removal - Refitting**, page **13B-181**) ,
- the diesel injectors (see **13B**, **Diesel injection**, **Diesel injector: Removal - Refitting**, page **13B-258**) ,
- the rocker cover (see **11A**, **Top and front of engine**, **Rocker cover: Removal - Refitting**, page **11A-158**) .

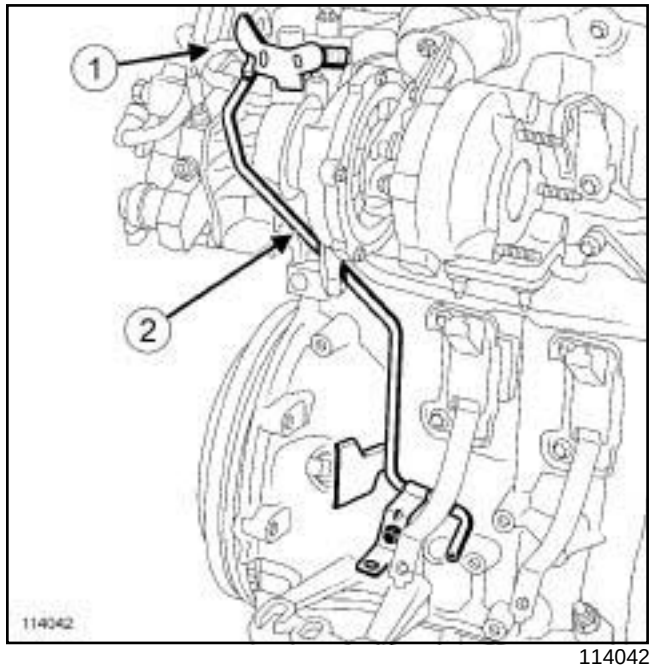

114042

❑ Disconnect the high pressure pump fuel collection pipe (**1**) from the fuel collector outlet pipe (**2**) of the cylinder head.

❑ Remove the fuel collector outlet pipe (**2**) from the cylinder head.

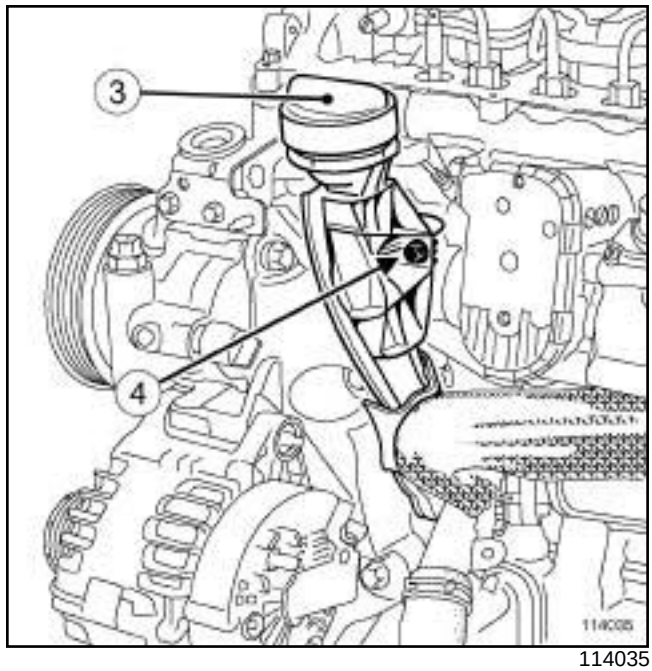

114035

❑ Remove:

- the « oil filler cap - dipstick » assembly (**3**) ,
- the dipstick guide bolt (**4**) ,
- the dipstick guide.

M9R

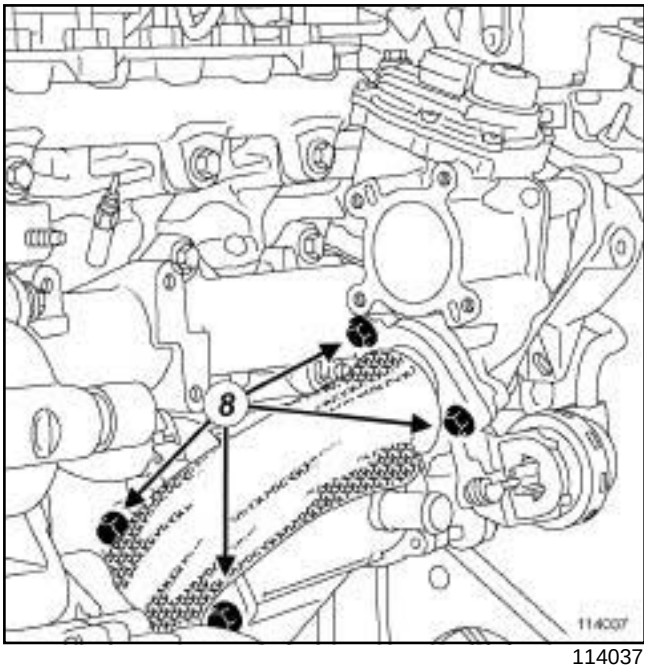

114037

❑ Remove:

- the bolts (**8**) of the EGR pipe at the EGR cooler outlet, applying a maximum loosening torque of **40 N.m** to avoid the breaking the bolts,
- the EGR pipe at the EGR cooler outlet,
- the seals of the EGR pipe at the EGR cooler outlet.

❑ Remove

> Note:
>
> If the bolts do not loosen:
>
> - apply **SUPER RELEASING AGENT** (see **Vehicle: Parts and ingredients for the repairwork**) ,
> - wait **10 minutes**,
> - apply a maximum torque of **40 N.m** until the bolt loosens.

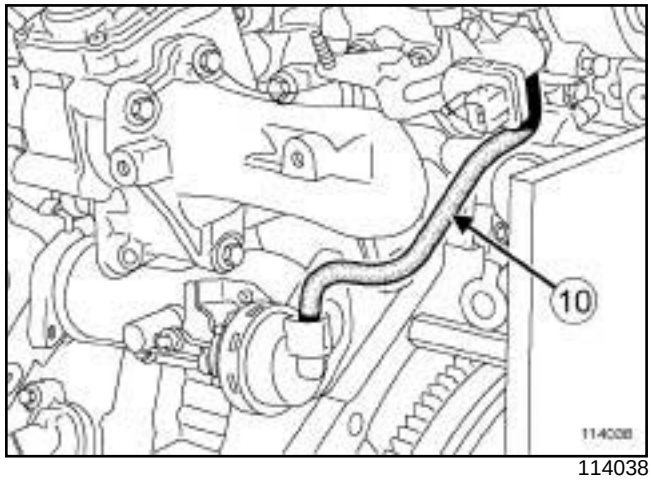

114038

❑ Remove the air pipe (**10**) between the EGR cooler control solenoid valve and the EGR cooler.

II - REMOVAL OF CYLINDER HEAD

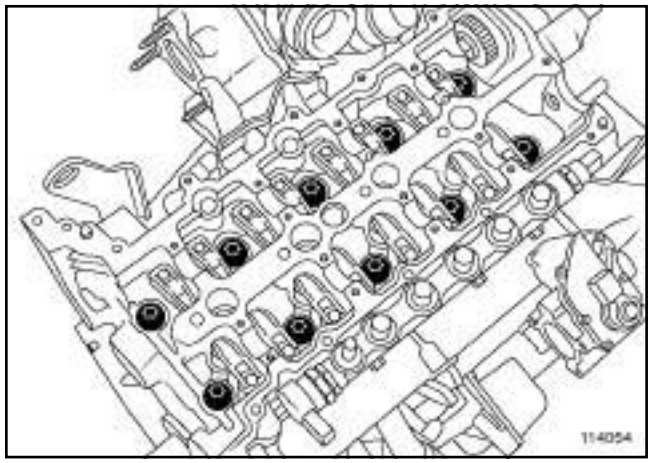

114054

❑ Remove:

- the cylinder head bolts,
- the cylinder head,
- the cylinder head gasket.

M9R

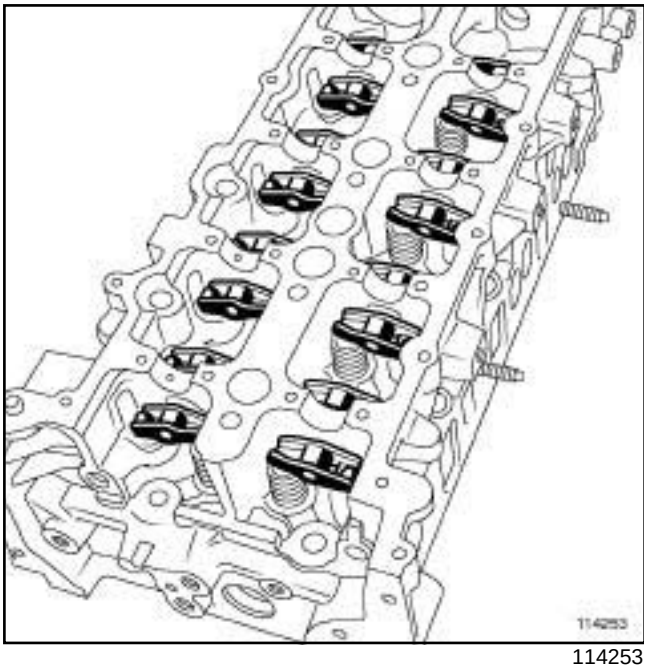

114253

❑ Remove the hydraulic tappet - valve rocker assemblies.

Note:

Mark each hydraulic tappet - valve rocker assembly in relation to the cylinder head.

Immerse the hydraulic tappets in a bath of engine oil to ensure no air enters.

M9R

REFITTING

I - REFITTING PREPARATION OPERATION

❑

> **WARNING**
> Protect the oilway so that foreign bodies do not enter the oil pipes in the cylinder head.
>
> Failure to follow this instruction could lead to the blocking of the oilways, resulting in a rapid deterioration of the camshaft.

❑ Clean using **SUPER CLEANING AGENT FOR JOINT FACES** (see **Vehicle: Parts and ingredients for the repairwork**) :

- the cylinder block gasket face,
- the cylinder head joint face.

> **WARNING**
> Do not scrape the joint faces of the aluminium, any damage caused to the joint face will result in a risk of leaks.

❑ Remove the residue using a plastic spatula.

❑ Finish cleaning the joint faces using a **GREY ABRASIVE PAD**.

❑ Degrease the following joint faces using **SURFACE CLEANER** (see **Vehicle: Parts and ingredients for the repairwork**) :

- the EGR pipe at the cooler outlet,
- the EGR solenoid valve,
- the EGR cooler.

> **WARNING**
> To ensure proper sealing, the gasket surfaces must be clean, dry and not greasy (avoid any finger marks).

> **WARNING**
> Applying excess sealant could cause it to be squeezed out when parts are tightened. A mixture of sealant and fluid could damage certain components (engine, radiator, etc.).

❑ **parts always to be replaced: cylinder head bolts (10,02,01,14)**

parts always to be replaced: Cylinder head gasket (10,02,01,04)

parts always to be replaced: exhaust gas recirculation pipe bolt (11,07,01,18)

❑ **parts always to be replaced: Exhaust gas recirculation pipe seal (11,07,01,15)**

❑ Always replace the seal of the dipstick tube.

II - OPERATION FOR REFITTING THE CYLINDER HEAD

❑ Check that the cylinder head seal matches the cylinder head (see **Cylinder head: Check**) .

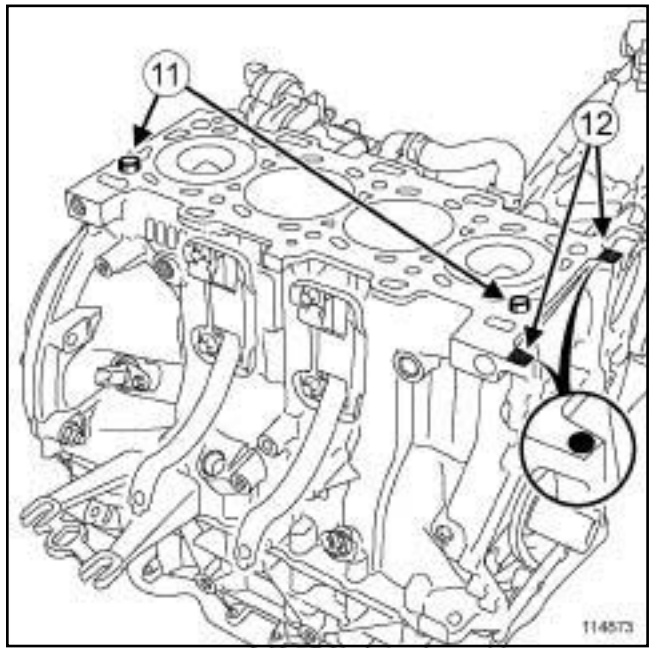

114873

❑ Check that the centring dowels of the cylinder head (**11**) are present. If removed, refit them.

❑ Place two small drops of **SILICONE ADHESIVE SEALANT** (see **Vehicle: Parts and ingredients for the repairwork**) measuring **Ø 5 to 7 mm** on the cylinder block at (**12**) (timing end).

M9R

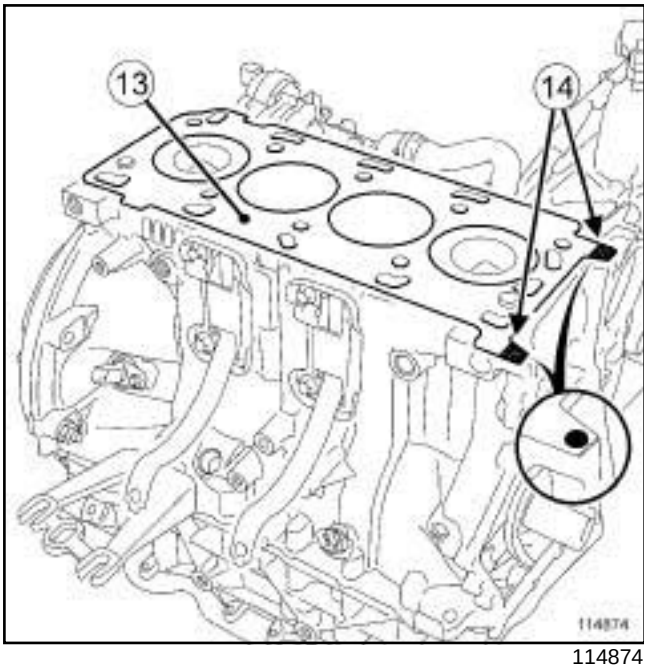

114874

❑

❑ Fit the new cylinder head gasket (**13**) on the cylinder block.

❑ Place two small drops of **SILICONE ADHESIVE SEALANT** measuring **∅ 5 to 7 mm** on the cylinder head gasket at (**14**) (timing end).

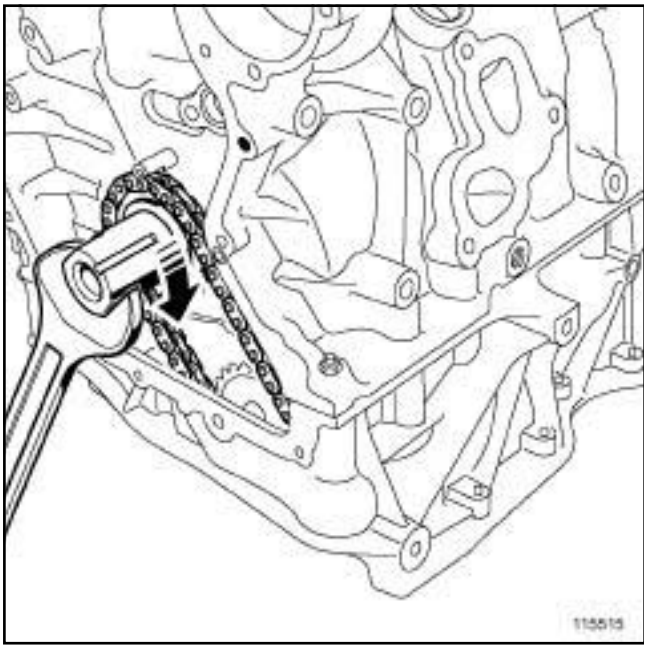

115515

❑ Position the pistons at mid-stroke by turning the crankshaft in a clockwise direction.

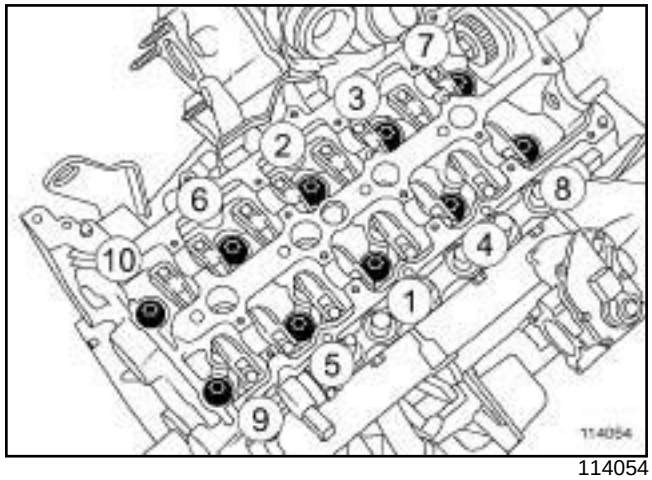

114054

❑ Refit the cylinder head.

❑ Torque tighten in order:

- the **cylinder head bolts (initial torque) (5 N.m)**,
- the **cylinder head bolts (final torque) (30 N.m + 300° ± 6°)**.

❑ Clean any excess **SILICONE ADHESIVE SEALANT** from the timing face using a plastic spatula.

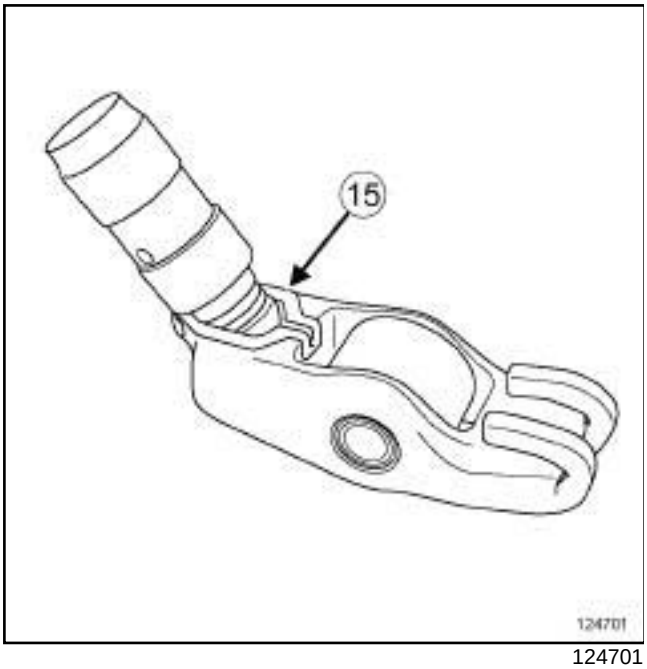

124701

- Press the heads of the hydraulic tappets to check that they are filled with oil before refitting them.
- If the piston pushes in, immerse the hydraulic tappet in a container of diesel fuel to reprime it.
- Check that the valve rocker clips (**15**) are in place.
- Lubricate the hydraulic tappet housings on the cylinder head with engine oil.
- Refit the hydraulic tappet - valve rocker assemblies in the cylinder head.

> Note:
>
> Check that the valve rockers are correctly positioned on the valves.

III - FINAL OPERATION

- Refit the air pipe between the EGR cooler control solenoid valve and the EGR cooler.
- Refit:
  - the new joints on the EGR pipe at the EGR cooler outlet,
  - the EGR pipe at the EGR cooler outlet,
  - the bolts of the EGR pipe at the EGR cooler outlet.
- Fit in order without tightening:
  - the bolts of the EGR pipe on the EGR solenoid valve end,
  - the bolts of the EGR pipe on the EGR cooler end.

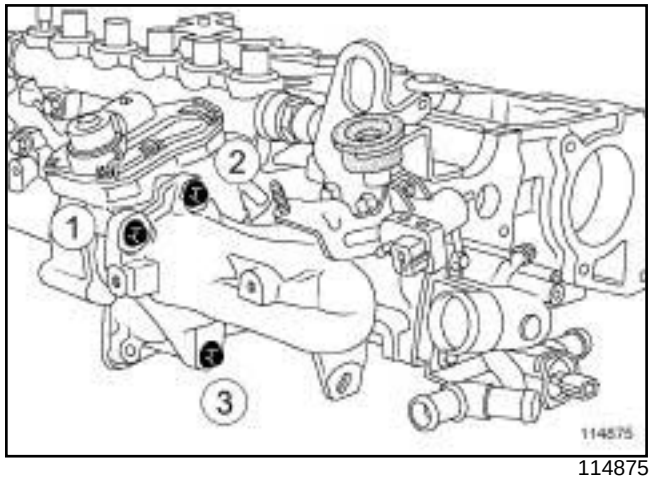

114875

- Tighten the following in order:
  - if removed, the bolts of the EGR solenoid valve (see **Cylinder head:Stripping - Restoring**) ,
  - the bolts of the EGR pipe on the EGR solenoid valve end,
  - the bolts of the EGR pipe on the EGR cooler end.
- Fit a new seal on the dipstick guide tube.
- Lubricate the seal with engine oil.
- Fit the dipstick guide tube in the cylinder block without rotating the guide tube.

> Note:
>
> Check that the seal has not come out of its housing.

- Tighten the dipstick tube bolts.
- Refit the filler cap - dipstick assembly.
- Fit the fuel collector outlet pipe of the cylinder head.
- Connect the high pressure pump fuel collection pipe onto the fuel collector outlet pipe of the cylinder head.
- Refit:
  - the rocker cover (see **11A**, **Top and front of engine**, **Rocker cover: Removal - Refitting**, page **11A-158**) .
  - the diesel injectors (see **13B**, **Diesel injection**, **Diesel injector: Removal - Refitting**, page **13B-258**) ,
  - the high pressure pipes between the rail and the injectors (see **13B**, **Diesel injection**, **High-pressure pipe between the rail and injector: Removal - Refitting**, page **13B-181**) ,

M9R

- the diesel return rail (see **13B**, **Diesel injection**, **Diesel injector fuel return rail: Removal - Refitting**, page **13B-148**) ,
- the oil separator (see **11A**, **Top and front of engine**, **Oil decanter: Removal - Refitting**, page **11A-301**) ,
- the high pressure pipe between the pump and the rail (see **13B**, **Diesel injection**, **High-pressure pipe between the pump and rail: Removal - Refitting**, page **13B-160**) ,
- the vacuum pump (see **Vacuum pump: Removal - Refitting**) .

❑ Refit:

- the turbocharger oil pipes (see **12B**, **Turbocharging**, **Turbocharger oil pipe: Removal - Refitting**, page **12B-52**) ,
- Depending on the version, the catalytic pre-converter or the catalytic converter at the turbocharger outlet (see **19B**, **Exhaust**, **Catalytic pre-converter: Removal - Refitting**, page **19B-29**) or (see **19B**, **Exhaust**, **Catalytic converter: Removal - Refitting**, page **19B-46**) ,
- the damper valve (see **12A**, **Fuel mixture**, **Air inlet flap: Removal - Refitting**, page **12A-33**) .

M9R, and 721 or 722 or 724

❑ Refit the exhaust gas pressure sensor (see **19B**, **Exhaust**, **Exhaust gas pressure sensor: Removal - Refitting**, page **19B-112**) .

❑ Refit:

- the timing chain (see **11A**, **Top and front of engine**, **Timing chain: Removal - Refitting**, page **11A-147**) ,
- the new crankshaft seal on the timing end (see **10A**, **Engine and cylinder block assembly**, **Crankshaft seal at timing end Removal - Refitting**, page **10A-1**) .

❑ Fit the flywheel locking tool **(Mot. 1431)** onto the cylinder block.

❑ Refit the crankshaft accessories pulley (see **11A**, **Top and front of engine**, **Crankshaft accessories pulley: Removal - Refitting**, page **11A-11**) .

❑ Remove the flywheel locking tool **(Mot. 1431)**.

❑ Refit:

- the coolant pump (see **19A**, **Cooling**, **Water pump: Removal - Refitting**, page **19A-29**) ,
- the new accessories belt (see **11A**, **Top and front of engine**, **Accessories belt: Removal - Refitting**, page **11A-4**) .

❑ Remove the engine from the component support (see **Engine support equipment: Use**) .

❑ Refit:

- the EGR pipe at the EGR cooler inlet (see **14A**, **Antipollution**, **Exhaust gas recirculation rigid pipe: Removal - Refitting**, page **14A-95**) ,
- the engine - gearbox assembly (see **10A**, **Engine and cylinder block assembly**, **Engine/gearbox assembly: Removal - Refitting**, page **10A-97**) ,

❑ Top up the engine oil (see **10A**, **Engine and cylinder block assembly**, **Engine oil: Draining - Refilling**, page **10A-43**) .

B84 or C84 or G84 or S84, and K9K, and 724

Essential special tooling	
Mot. 1672	Lower engine support.
Mot. 1448	Long nose pliers for hose clips.

Essential equipment
cylinder head rule
set of feeler gauges

Tightening torques ▽	
cylinder head bolts (initial torque)	**20 Nm**
cylinder head bolts	**25 N.m**
new cylinder head bolts	**270° ± 10°**
alternator lower bolt	**25 N.m**
alternator upper bolt	**25 N.m**
rocker cover bolts	**11 N.m**
air filter unit air outlet pipe clips	**5.5 Nm**
intercooler air outlet pipe clips	**5.5 N.m**

REMOVAL

I - REMOVAL PREPARATION OPERATION

❑ Position the vehicle on a two-post lift (see **Vehicle: Towing and lifting**) (02A, Lifting equipment).

❑ Disconnect the battery (see **Battery: Removal - Refitting**) (80A, Battery).

❑ Remove:

- the engine cover,
- the engine undertray bolts,
- the engine undertray,
- the front wheels (see **Wheel: Removal - Refitting**) (35A, Wheels and tyres),
- the front section of the front wheel arch liners (see **Front wheel arch liner: Removal - Refitting**) (55A, Exterior protection),
- the front bumper (see **Front bumper: Removal - Refitting**) (55A, Exterior protection),
- the catalytic converter (see **19B**, **Exhaust**, **Catalytic converter: Removal - Refitting**, page **19B-46**) ,
- the turbocharger oil return pipe (see **12B**, **Turbocharging**, **Turbocharger oil pipe: Removal - Refitting**, page **12B-52**) ,
- the accessories belt (see **11A**, **Top and front of engine**, **Accessories belt: Removal - Refitting**, page **11A-4**) ,
- the crankshaft accessories pulley (see **11A**, **Top and front of engine**, **Crankshaft accessories pulley: Removal - Refitting**, page **11A-11**) .

❑ Drain the cooling system (see **19A**, **Cooling**, **Cooling circuit: Draining - Refilling**, page **19A-15**) .

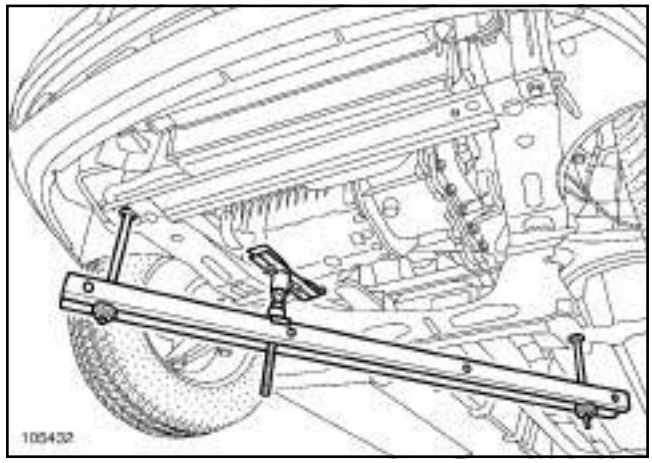

105432

❑ Position the **(Mot. 1672)**

❑ Remove:

- the camshaft position sensor (see **13B**, **Diesel injection**, **Camshaft position sensor: Removal - Refitting**, page **13B-68**)
- the right-hand suspended engine mounting (see **19D**, **Engine mounting**, **Right-hand suspended engine mounting: Removal - Refitting**, page **19D-20**) ,
- the timing belt (see **11A**, **Top and front of engine**, **Timing belt: Removal - Refitting**, page **11A-18**) .

B84 or C84 or G84 or S84, and K9K, and 724

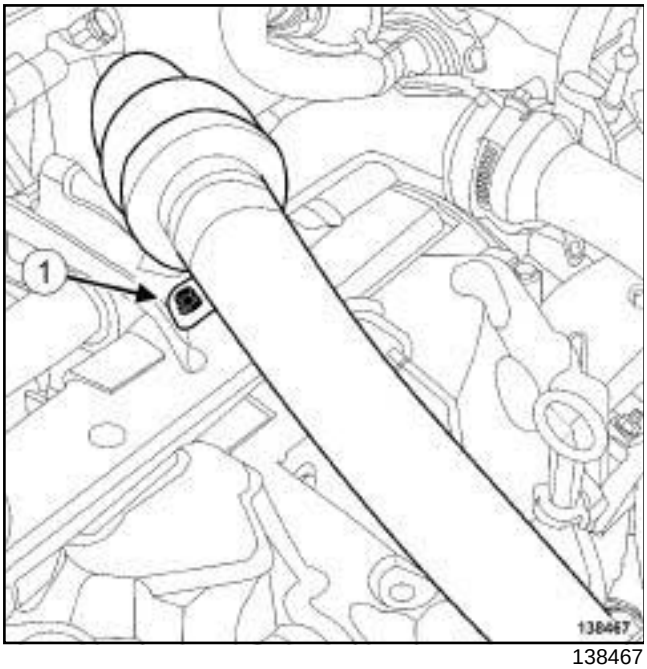

138467

❏ Remove the bolt (**1**) on the intercooler air inlet pipe.

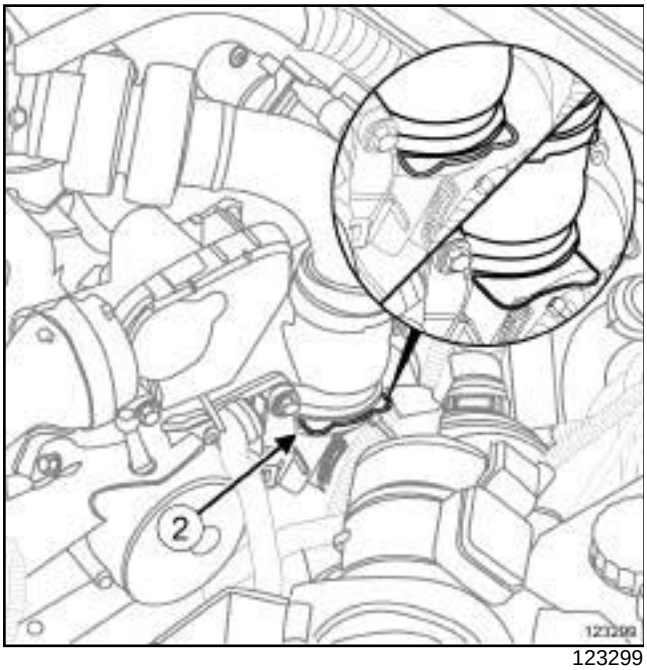

123299

❏ Pull the clip (**2**) from the intercooler inlet air pipe.

❏ Disconnect the intercooler air inlet pipe.

❏ Remove the intercooler inlet air pipe.

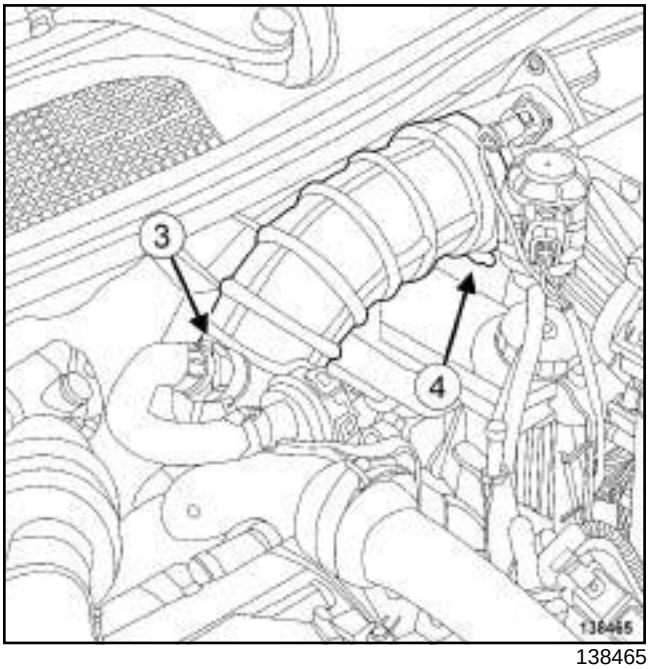

138465

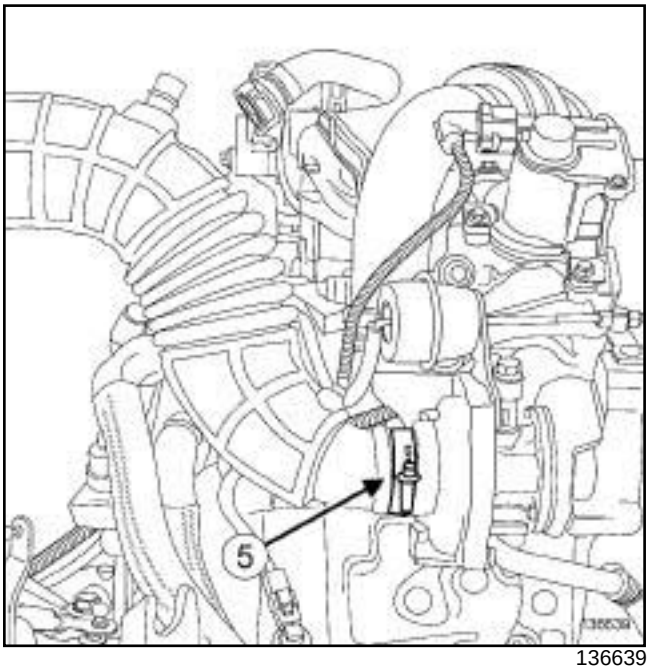

136639

❏ Unclip at (**3**) the oil vapour rebreathing pipe.

❏ Remove the oil vapour rebreathing pipe.

❏ Undo:

- the clip (**4**) of the air filter unit air outlet pipe at the air filter unit end,

- the clip (**5**) of the air filter unit air outlet pipe at the turbocharger end.

❏ Remove the air outlet pipe from the air filter box.

B84 or C84 or G84 or S84, and K9K, and 724

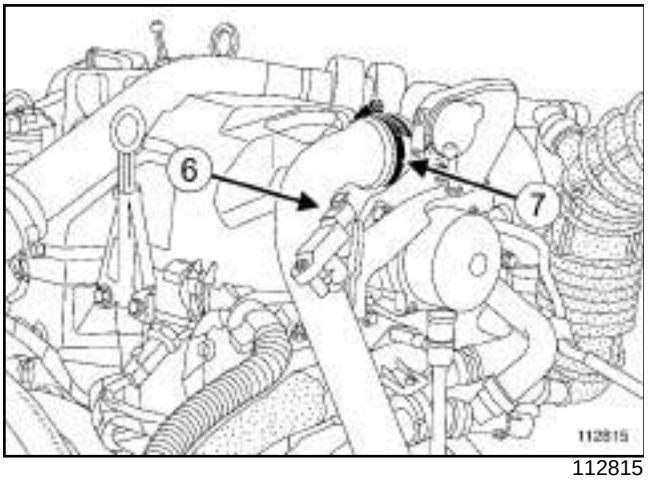

112815

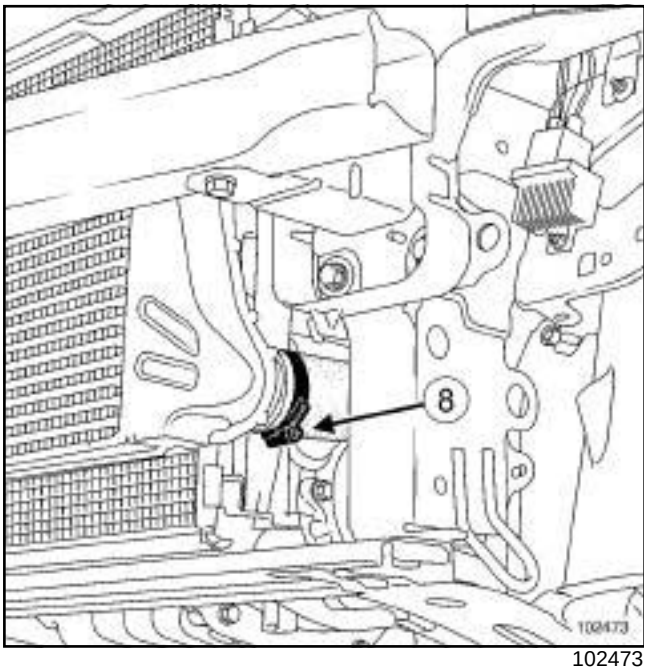

102473

❑ Disconnect the turbocharging pressure sensor connector (**6**) .

❑ Undo:

- the clip (**7**) of the intercooler air outlet pipe at the oil vapour rebreather valve end,
- the clip (**8**) of the intercooler air outlet pipe at the intercooler end.

❑ Remove the intercooler air outlet pipe.

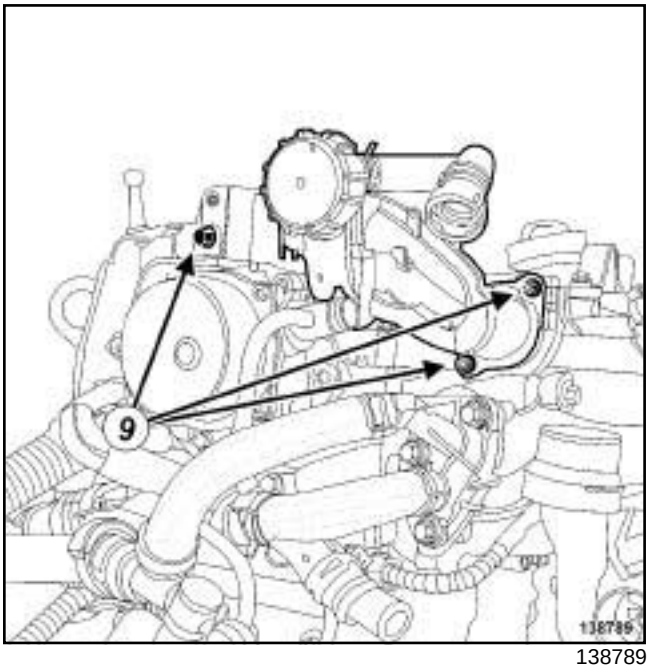

138789

❑ Remove:

- the bolts (**9**) of the oil vapour rebreathing valve,
- the oil vapour rebreathing valve,
- the seal of the oil vapour rebreathing valve.

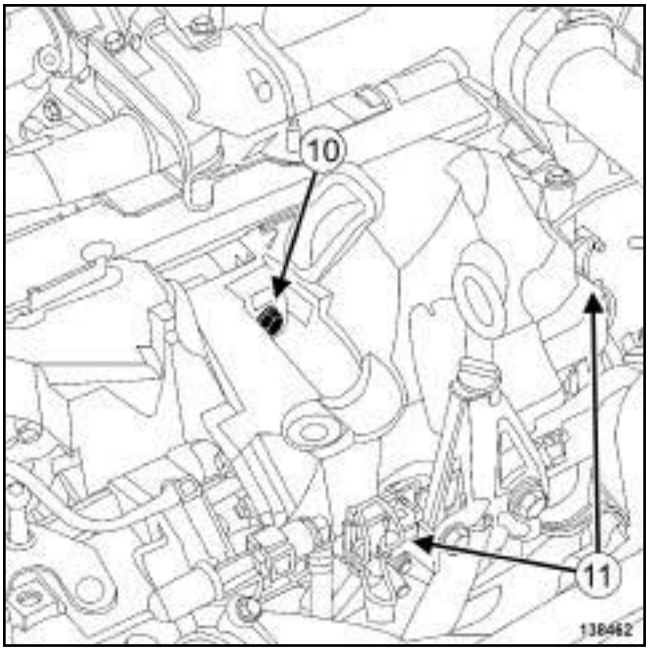

138462

❑ Remove the bolts (**10**) from the injector rail protector cover.

❑ Unclip (**11**) the cover from the injector rail protector.

❑ Remove the injector rail protector cover.

B84 or C84 or G84 or S84, and K9K, and 724

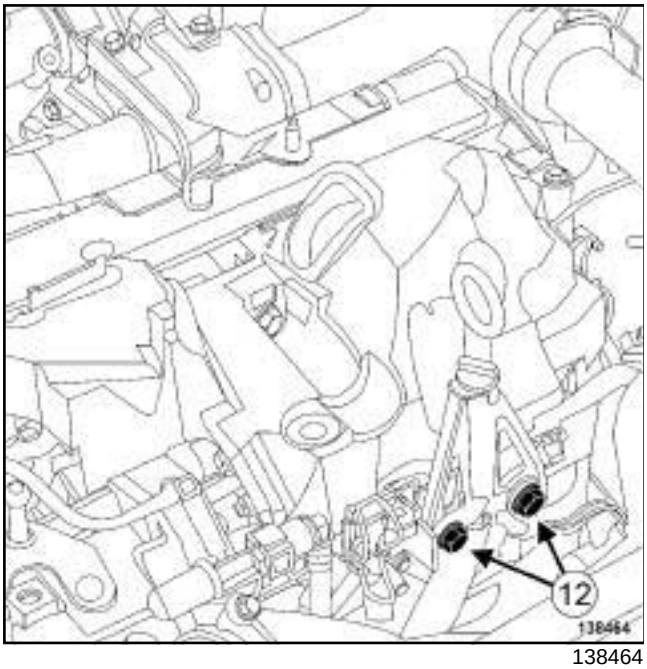

138464

- ❑ Remove the dipstick guide bolts (**12**) .
- ❑ Move aside the dipstick guide.

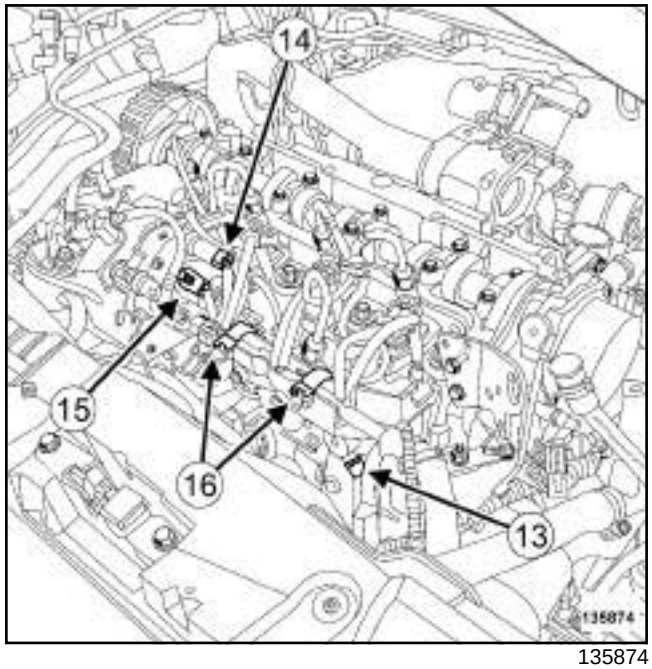

135874

- ❑ Disconnect:
  - the connector (**13**) from the injector rail pressure sensor,
  - the fuel temperature sensor connector (**14**) ,
  - the connector (**15**) of the fuel flow regulation solenoid valve,
  - the injector connectors,
  - the heater plug connectors.
- ❑ Unclip the injection wiring clips (**16**) .
- ❑ Move aside the injection wiring.
- ❑ Disconnect:
  - exhaust gas recirculation solenoid valve connector ,
  - the turbocharging pressure regulation solenoid valve hose,
  - the brake servo pipe union on the vacuum pump.
- ❑ Remove the fuel return rail (see **13B**, **Diesel injection**, **Diesel injector fuel return rail: Removal - Refitting**, page **13B-148**) .

B84 or C84 or G84 or S84, and K9K, and 724

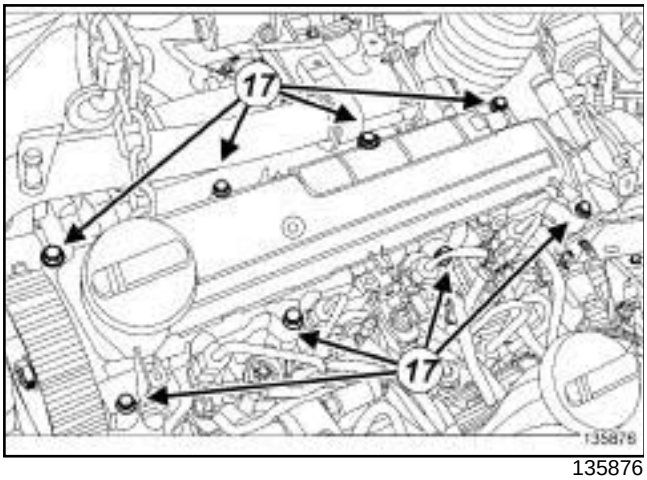

135876

❑ Remove:

- the rocker cover bolts (**17**) ,
- the rocker cover.

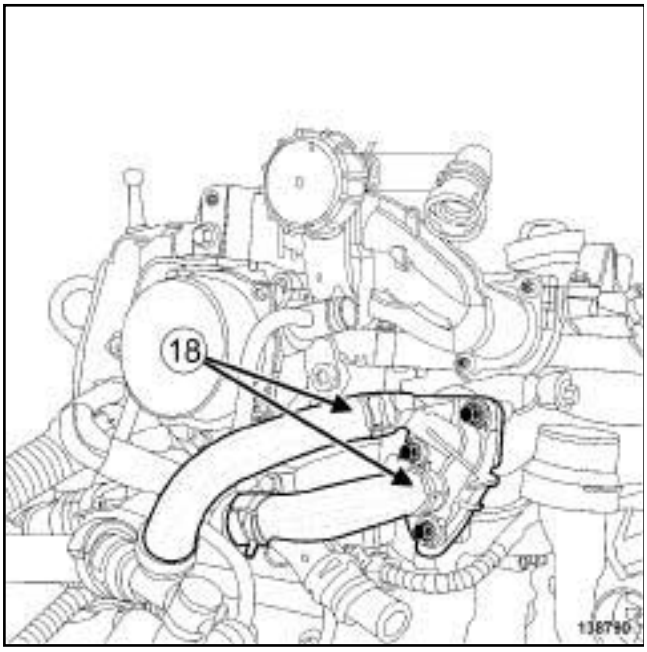

138790

❑ Separate the clips (**18**) on the exhaust gas cooler hoses using the tool **(Mot. 1448)**.

❑ Disconnect the hoses from the exhaust gas cooler.

❑ Unclip the heater matrix hose from the water chamber.

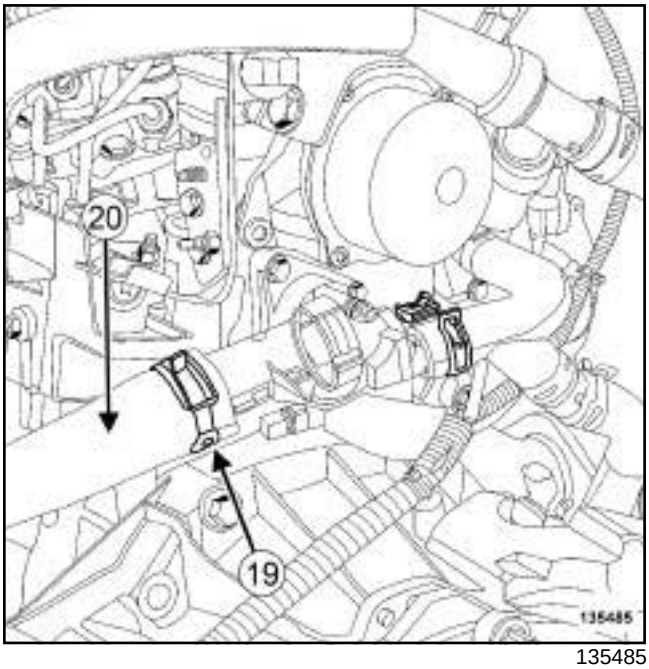

135485

❑ Move the clip (**19**) of the cooling radiator top hose (**20**) to one side using the **(Mot. 1448)**.

❑ Disconnect the cooling radiator top hose.

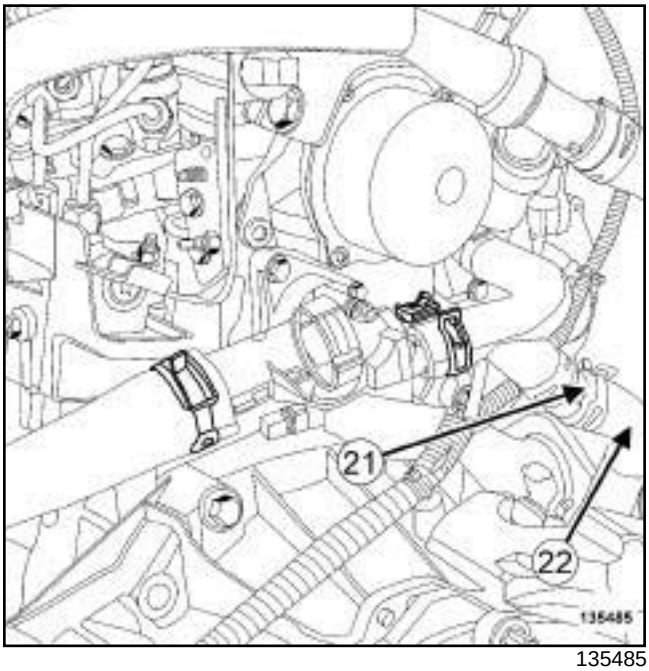

135485

❑ Move aside the clip (**21**) of the heater matrix hose using the **(Mot. 1448)**.

❑ Disconnect the heater matrix hose (**22**) .

❑ Disconnect the coolant temperature sensor connector.

B84 or C84 or G84 or S84, and K9K, and 724

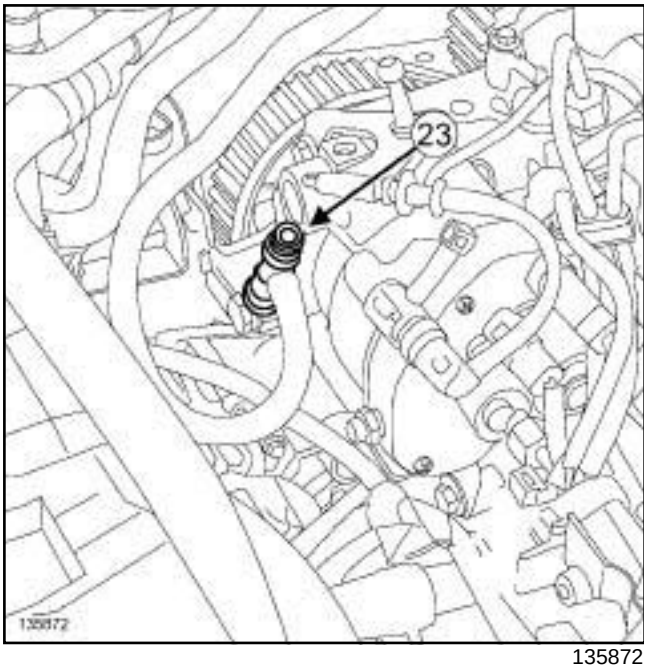

135872

- ❑ Disconnect the fuel supply pipe (**23**) from the high pressure pump.
- ❑ Fit a suitable blanking plug to:
  - the fuel supply pipe union opening,
  - the high pressure pump opening.

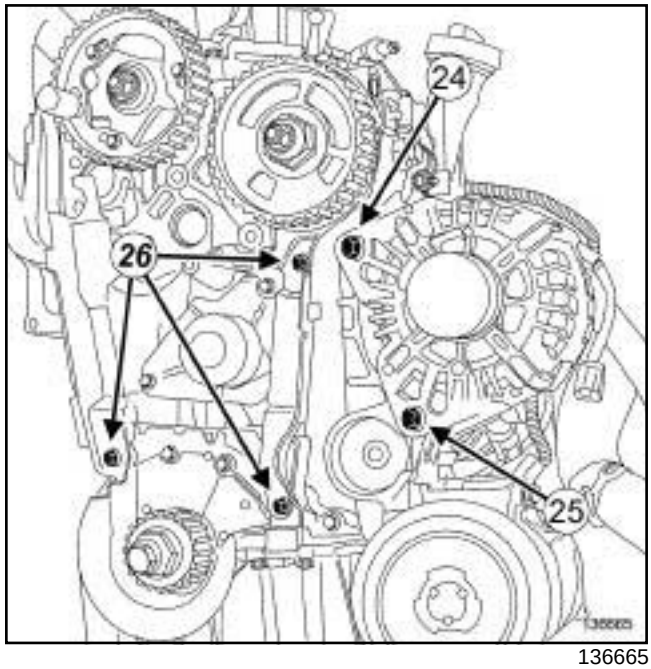

136665

- ❑ Remove the alternator upper bolt (**24**) .
- ❑ Loosen the alternator lower bolt (**25**) .
- ❑ Tilt the alternator slightly towards the front of the vehicle.
- ❑ Remove:
  - the bolts (**26**) from the inner cover,
  - the inner cover.

II - OPERATION FOR REMOVAL OF PART CONCERNED

❑

> Note:
>
> The operation to remove the cylinder head requires two people.

B84 or C84 or G84 or S84, and K9K, and 724

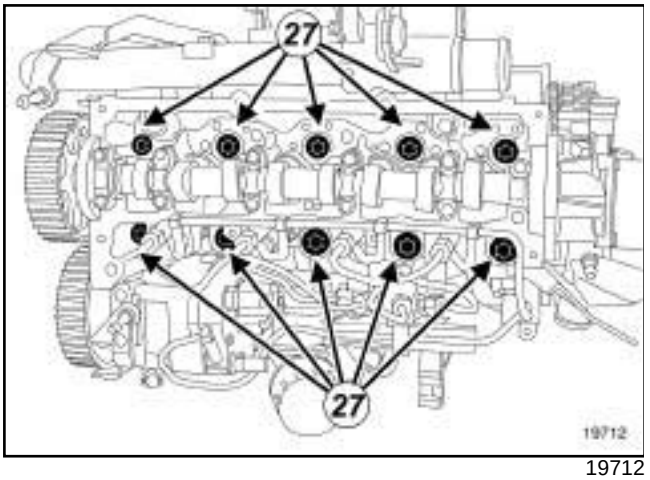

19712

❑ Remove:

- the cylinder head bolts (**27**) ,
- the cylinder head from the cylinder block,
- the cylinder head gasket.

REFITTING

I - REFITTING PREPARATION OPERATION

❑

IMPORTANT
Wear goggles with side protectors for this operation.

IMPORTANT
Wear leaktight gloves (Nitrile type) for this operation.

WARNING
Do not scrape the joint faces of the aluminium, any damage caused to the joint face will result in a risk of leaks.

WARNING
Do not allow this product to drip onto the paintwork.

Clean the cylinder head carefully to avoid any foreign bodies entering the oil return and supply pipes.

Failure to follow this advice could lead to the blocking of the various oil inlet galleries, which would quickly result in engine damage.

WARNING
To ensure proper sealing, the gasket surfaces must be clean, dry and not greasy (avoid any finger marks).

❑ **parts always to be replaced: cylinder head bolts (10,02,01,14)**

❑ **parts always to be replaced: Cylinder head gasket (10,02,01,04)**

❑ **parts always to be replaced: rocker cover seal (10,02,01,12)**

❑ Always replace the seal of the oil vapour rebreathing valve.

B84 or C84 or G84 or S84, and K9K, and 724

1 - Cleaning the cylinder head joint face

❏

> **WARNING**
> Protect the oilway so that foreign bodies do not enter the oil pipes in the cylinder head.
>
> Failure to follow this instruction could lead to the blocking of the oilways, resulting in a rapid deterioration of the camshaft.

❏ Clean the joint faces using **ABRASIVE PADS** :

- the cylinder head,
- of the cylinder block.

❏ Use a **SURFACE CLEANER** (see **Vehicle: Parts and consumables for repair**) (04B, Consumables - Products) and **CLEAN CLOTHS** to degrease the joint faces:

- the cylinder head,
- of the cylinder block,
- of the exhaust gas cooler mounting on the gearbox side,
- of the oil vapour rebreathing valve.

2 - Checking the gasket face

❏ Check with a **cylinder head rule** and a **set of feeler gauges** to determine if the joint face has been deformed.

> **WARNING**
> No regrinding of the cylinder head is permitted.

❏ The maximum deformation is **0.05 mm**.

> Note:
> If the cylinder head is faulty:
> - strip down the cylinder head (see **Stripping the cylinder head**) (Technical Note 6006A, 10A, Engine and peripherals),
> - test the cylinder head for possible cracks using the cylinder head test kit,
> - rebuild the cylinder head (see **Rebuilding the cylinder head**) (Technical Note 6006A, 10A, Engine and peripherals).

3 - Cleaning the joint face of the rocker cover

❏ Clean the cylinder head joint face using **ABRASIVE PADS**.

❏ Use **SURFACE CLEANER** (see **Vehicle: Parts and consumables for repair**) (04B, Consumables - Products) and **CLEAN CLOTHS** to degrease:

- the cylinder head joint face,
- the rocker cover housing.

II - REFITTING OPERATION FOR PART CONCERNED

❏ Bring the pistons to mid-stroke position to prevent any risk of contact with the valves when tightening the cylinder head.

> Note:
> The operation to refit the cylinder head requires two people.

> Note:
> The cylinder head gasket has a foolproofing device which must be positioned on the cylinder block inlet side.

❏ Fit:

- a new cylinder head gasket, centred by two dowels,
- the cylinder head on the cylinder block.

> **WARNING**
> In order to ensure that the bolts are correctly tightened, use a syringe to remove any oil which may be in the cylinder head mounting holes.

> **WARNING**
> Do not oil the new bolts. Be sure to oil bolts being reused.

B84 or C84 or G84 or S84, and K9K, and 724

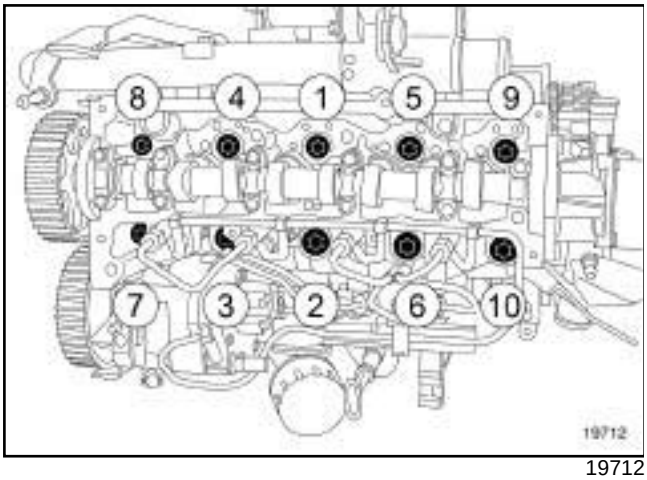

19712

- ❑ Refit in order new cylinder head bolts.
- ❑ Pretighten to torque and in order the **cylinder head bolts (initial torque) (20 Nm)**.
- ❑ Torque tighten in order the **cylinder head bolts (25 N.m)**.
- ❑ Check that all the cylinder head bolts are correctly tightened to a torque of **25 N.m**.
- ❑ Angle tighten in order the **new cylinder head bolts (270° ± 10°)**.

III - FINAL OPERATION

- ❑ Refit the inner cover.
- ❑ Fit the alternator in place.
- ❑ Refit the alternator upper bolt.
- ❑ Tighten to torque:
  - the **alternator lower bolt (25 N.m)**,
  - the **alternator upper bolt (25 N.m)**.

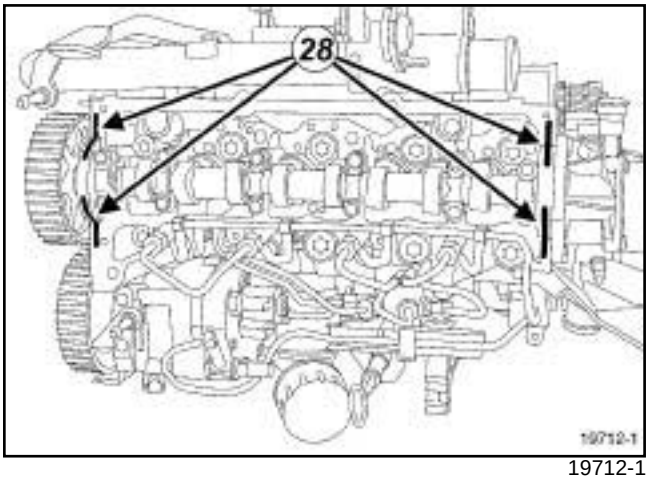

19712-1

- ❑

WARNING
Applying excess sealant could cause it to be squeezed out when parts are tightened. A mixture of sealant and fluid could damage certain components (engine, radiator, etc.).

- ❑ Place beads (**28**) of **SILICONE ADHESIVE SEALANT** (see **Vehicle: Parts and consumables for repair**) (04B, Consumables - Products) **20 mm** in diameter and **10 mm** wide.
- ❑ Refit the rocker cover, fitted with a new gasket.
- ❑ Torque tighten the **rocker cover bolts (11 N.m)**.
- ❑ Remove the blanking plug:
  - the opening of the high pressure pump,
  - on the fuel supply pipe union opening.
- ❑ Connect the fuel supply pipe to the high pressure pump.
- ❑ Connect:
  - the coolant temperature sensor connector,
  - the heater matrix hose to the water chamber cooling hose.
- ❑ Fit the heater matrix hose clip on the water chamber cooling hose using the **(Mot. 1448)**.
- ❑ Connect the radiator top hose on the water chamber.
- ❑ Fit the clip of the radiator top hose on the water chamber.
- ❑ Connect the hoses on the exhaust gas cooler cover.
- ❑ Fit the clips of the hoses on the exhaust gas cooler cover using the tool **(Mot. 1448)**.
- ❑ Clip the heater matrix hose on the water chamber.

B84 or C84 or G84 or S84, and K9K, and 724

- ❑ Refit the diesel injector fuel return rail (see **13B**, **Diesel injection**, **Diesel injector fuel return rail: Removal - Refitting**, page **13B-148**) .
- ❑ Fit the injection wiring.
- ❑ Clip on the injection wiring clips.
- ❑ Connect:
  - the diesel injector connectors,
  - the heater plug connectors ,
  - the connector for the fuel flow regulation solenoid valve,
  - the fuel temperature sensor connector,
  - the injector rail pressure sensor connector.
- ❑ Connect the air filter unit air outlet pipe to the turbocharger.
- ❑ Torque tighten the **air filter unit air outlet pipe clips (5.5 Nm)**.
- ❑ Connect:
  - exhaust gas recirculation solenoid valve connector ,
  - the turbocharging pressure regulation solenoid valve hose,
  - the brake servo pipe from the vacuum pump.
- ❑ Fit the dipstick guide tube.
- ❑ Refit the dipstick guide tube bolts.
- ❑ Refit the injector rail protector cover.
- ❑ Clip on the injector rail protector cover.
- ❑ Refit:
  - the new oil vapour rebreathing valve seal on the oil vapour rebreathing valve,
  - the oil vapour rebreathing valve.
- ❑ Connect the oil vapour rebreathing pipe union to the air filter unit air outlet pipe.
- ❑ Refit the intercooler air outlet pipe.
- ❑ Torque tighten the **intercooler air outlet pipe clips (5.5 N.m)**.
- ❑ Connect the turbocharger pressure sensor.
- ❑ Refit the intercooler air inlet pipe.
- ❑ Refit the bolt on the intercooler air inlet pipe.
- ❑ Refit:
  - the timing belt (see **11A**, **Top and front of engine**, **Timing belt: Removal - Refitting**, page **11A-18**) ,
  - the camshaft position sensor (see **13B**, **Diesel injection**, **Camshaft position sensor: Removal - Refitting**, page **13B-68**) ,
- ❑ Refit:
  - the right-hand suspended engine mounting (see **19D**, **Engine mounting**, **Right-hand suspended engine mounting: Removal - Refitting**, page **19D-20**) ,
  - remove the **(Mot. 1672)**,
  - the crankshaft accessories pulley (see **11A**, **Top and front of engine**, **Crankshaft accessories pulley: Removal - Refitting**, page **11A-11**) ,
  - the accessories belt (see **11A**, **Top and front of engine**, **Accessories belt: Removal - Refitting**, page **11A-4**) ,
  - the turbocharger oil return pipe (see **12B**, **Turbocharging**, **Turbocharger oil pipe: Removal - Refitting**, page **12B-52**) ,
  - the catalytic converter (see **19B**, **Exhaust**, **Catalytic converter: Removal - Refitting**, page **19B-46**) ,
  - the front bumper (see **Front bumper: Removal - Refitting**) (55A, Exterior protection),
  - the engine undertray,
  - the front section of the front wheel arch liners (see **Front wheel arch liner: Removal - Refitting**) (55A, Exterior protection),
  - the front wheels (see **Wheel: Removal - Refitting**) (35A, Wheels and tyres),
  - the engine cover.
- ❑ Connect the battery (see **Battery: Removal - Refitting**) (80A, Battery).
- ❑ Fill and bleed the cooling system (see **19A**, **Cooling**, **Cooling circuit: Draining - Refilling**, page **19A-15**) .

K9K, and 722 or 728 or 729

Essential special tooling	
Car. 1363	Set of trim removal levers.
Mot. 1672	Lower engine support.
Mot. 1453	Multiple-adjusting engine mounting support with retaining straps.
Mot. 1448	Long nose pliers for hose clips.

Essential equipment
cylinder head rule
set of feeler gauges
cylinder head testing tool

Tightening torques ▽	
cylinder head bolts (initial torque)	**20 N.m**
cylinder head bolts	**25 N.m**
cylinder head bolts	**270° ± 10°**
rocker cover bolts	**10 N.m**
intercooler air inlet pipe clip	**5.5 N.m**

IMPORTANT

To avoid all risk of damage to the systems, apply the safety and cleanliness instructions and operation recommendations before carrying out any repair:

- (see **13B**, **Diesel injection**, **Diesel injection: Precautions for repair**, page **13B-12**) ,
- (see **Precautions for repair**) (01D, Mechanical introduction).

IMPORTANT

Use the diagnostic tool before any operation is carried out on the injection circuit to check:

- that the rail is not under pressure,
- that the fuel temperature is not too high.

Working on the circuit with the engine running is strictly forbidden.

Note:

Procedure for removing the air inlet duct (K9K 728 and 729):

- draw a mark on the intercooler air inlet pipe between the stainless steel pipe and the hose,
- detach the hose using the **(Car. 1363)**,
- do not use a degreaser, brake cleaning product, or any other product,
- clean the stainless steel pipe and the hose with a dry, lint-free cloth,
- refit the clip in the same position in the event that the hose is not replaced,
- rotate the clip around its shaft to make torque tightening easier,
- it is essential to replace the hose and/or the stainless steel pipe in the event of damage.

There is a risk of leaks or dislodging if this procedure is not followed.

REMOVAL

I - REMOVAL PREPARATION OPERATION

❑ Position the vehicle on a two-post lift (see **Vehicle: Towing and lifting**) (02A, Lifting equipment).

❑ Remove:

- the engine covers,
- the engine undertray bolts,
- the engine undertray.
- the front wheels (see **Wheel: Removal - Refitting**) (35A, Wheels and tyres),
- the front section of the front wheel arch liners (see **Front wheel arch liner: Removal - Refitting**) (55A, Exterior protection),

K9K, and 722 or 728 or 729

- the battery (see **Battery: Removal - Refitting**) (80A, Battery),
- the accessories belt (see **11A**, **Top and front of engine**, **Accessories belt: Removal - Refitting**, page **11A-4**) ,
- the timing belt (see **11A**, **Top and front of engine**, **Timing belt: Removal - Refitting**, page **11A-18**) ,
- the front bumper (see **Front bumper: Removal - Refitting**) (55A, Exterior protection).

❑ Drain the cooling system (see **19A**, **Cooling**, **Cooling circuit: Draining - Refilling**, page **19A-15**) .

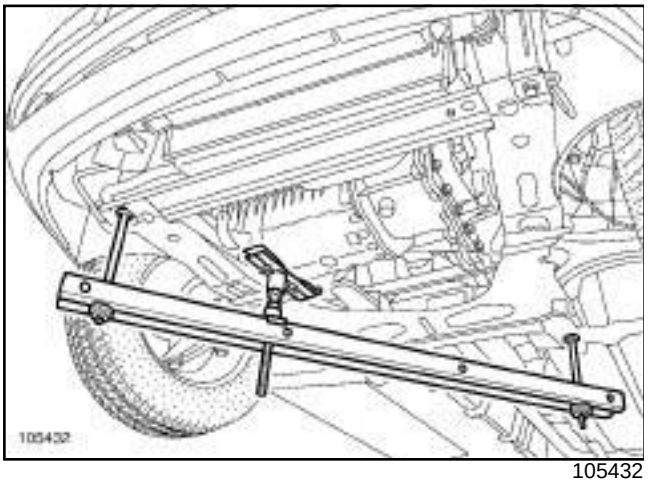

105432

❑ Position the **(Mot. 1672)**.

❑ Remove the tool **(Mot. 1453)**.

K9K, and 722

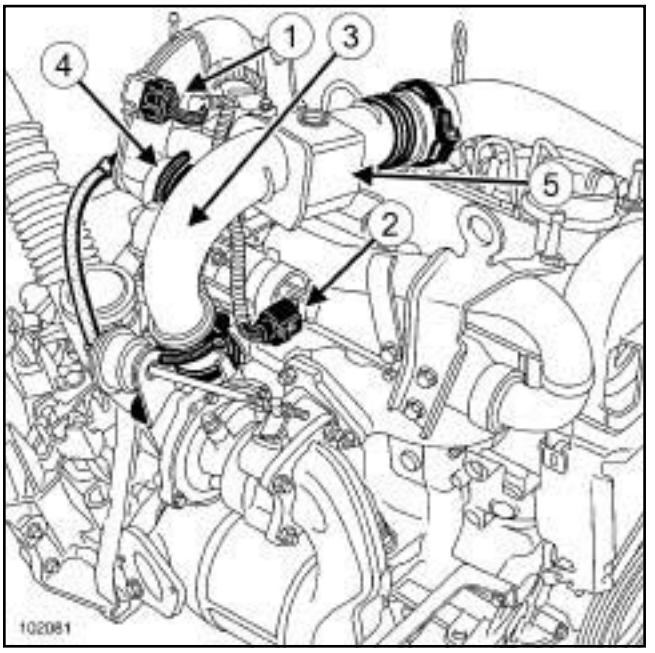

102081

❑ Disconnect:

- the air temperature and pressure sensor connector (**1**) ,
- exhaust gas recirculation solenoid valve connector (**2**) ,
- the turbocharger air outlet pipe (**3**) ,
- the intercooler air outlet pipe (**4**) ,
- the turbocharging pressure regulation solenoid valve pipe,
- the air outlet pipe of the air filter unit,
- the oil vapour rebreathing pipe on the rocker cover.

❑ Remove the resonator unit mounting stay (**5**) .

K9K, and 722 or 728 or 729

K9K, and 728 or 729

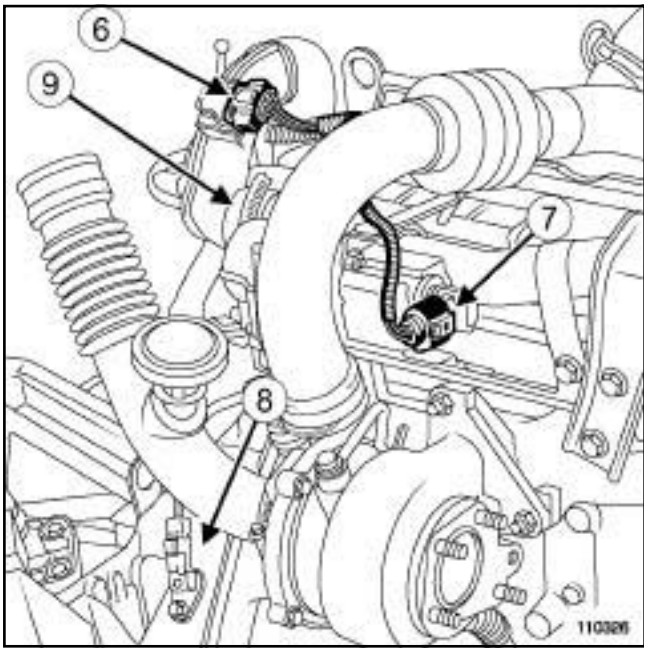

110326

❑ Disconnect:

- the air temperature and pressure sensor connector (**6**) ,
- exhaust gas recirculation solenoid valve connector (**7**) ,
- the crankshaft position sensor connector (**8**) ,
- the intercooler air outlet pipe (**9**) ,
- the turbocharging pressure regulation solenoid valve pipe.

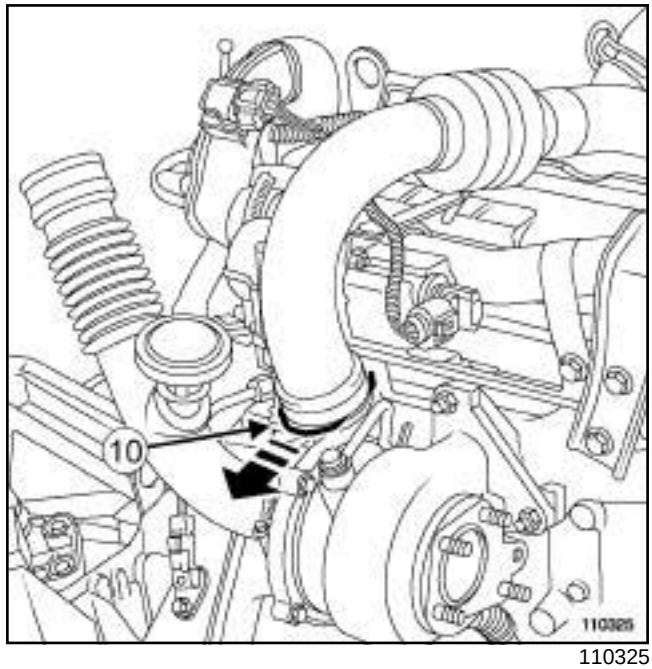

110325

❑ Pull out clip (**10**) .

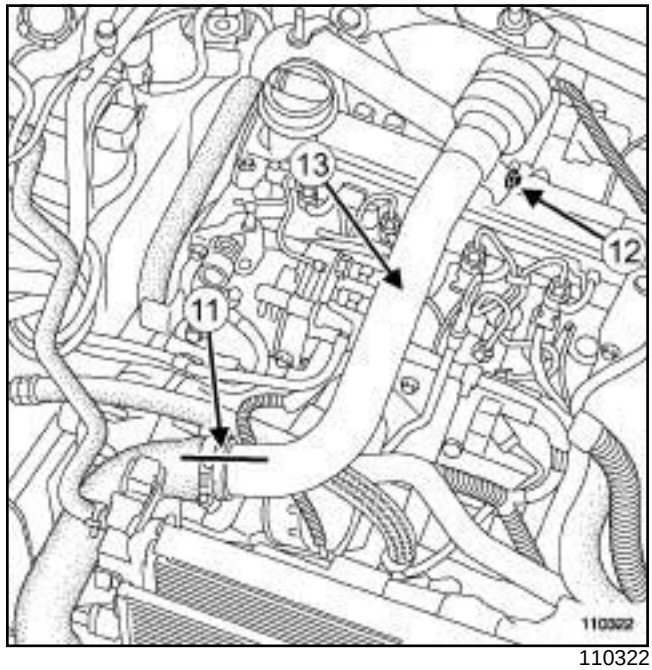

110322

❑ Draw a mark at (**11**) on the intercooler air inlet pipe.

❑ Remove:

- the bolt (**12**) ,
- the intercooler air inlet pipe (**13**) .

K9K, and 722 or 728 or 729

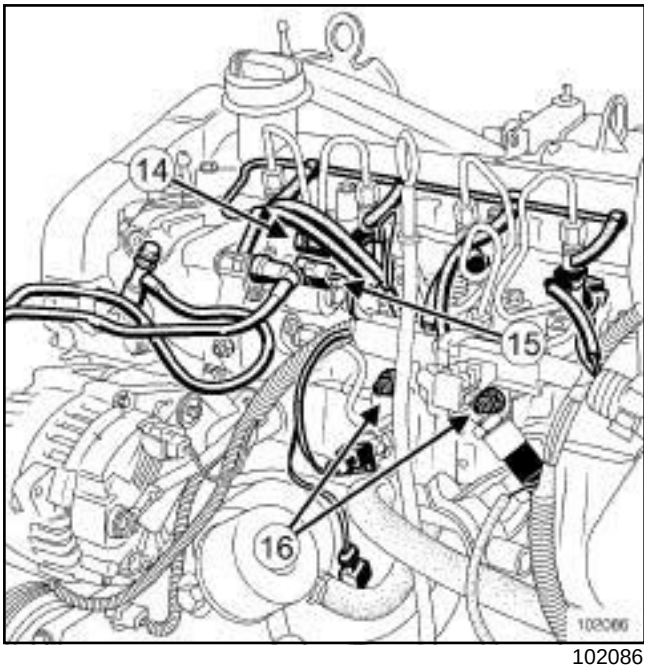

102086

❑ Disconnect:

- the injector connectors,
- the heater plug connectors ,
- the injector rail pressure sensor connectors,
- the diesel fuel supply pipe on the injection pump,
- the fuel return pipe on the injection pump,
- the fuel temperature sensor (**14**) ,
- the fuel flow actuator connector (**15**) .

❑ Remove:

- the bolts (**16**) from the injector rail protector,
- the injector rail protector.

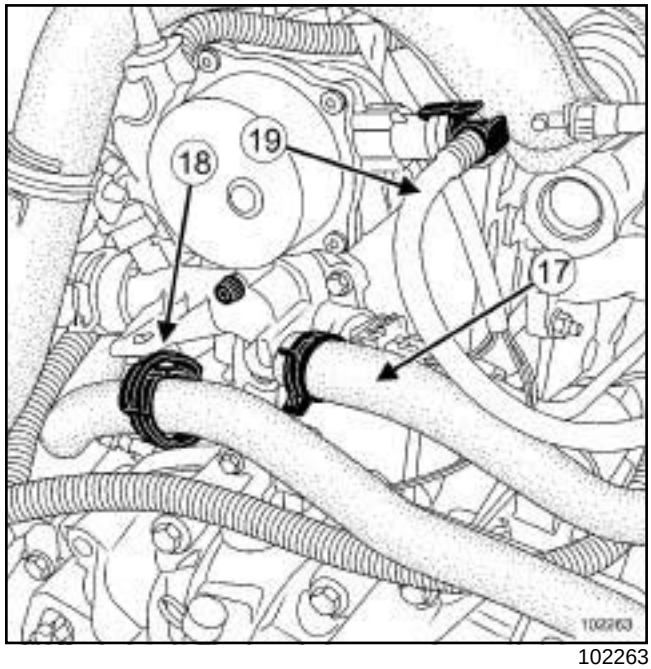

102263

❑ Disconnect:

- the hoses (**17**) from the water chamber using the **(Mot. 1448)**,
- the vacuum pipe (**19**) from the brake servo on the vacuum pump side,
- the connector of the coolant temperature sensor on the water chamber,
- the radiator top hose on the cylinder head water chamber using the **(Mot. 1448)**.

❑ Unclip the heater matrix cooling hose from the water chamber using the (**18**) .

❑ Remove the catalytic converter (see **19B**, **Exhaust**, **Catalytic converter: Removal - Refitting**, page **19B-46**) .

K9K, and 722 or 728 or 729

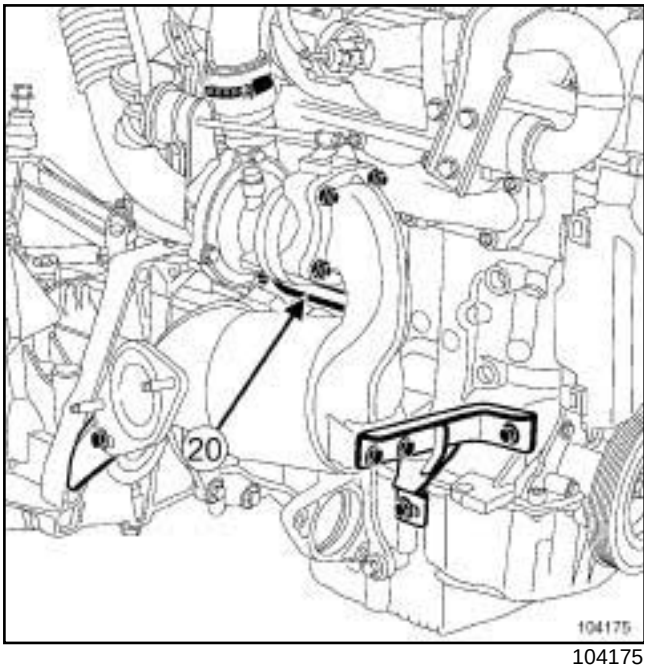

104175

❑ Remove the turbocharger oil return pipe (**20**) (see **12B**, **Turbocharging**, **Turbocharger oil pipe: Removal - Refitting**, page **12B-52**) .

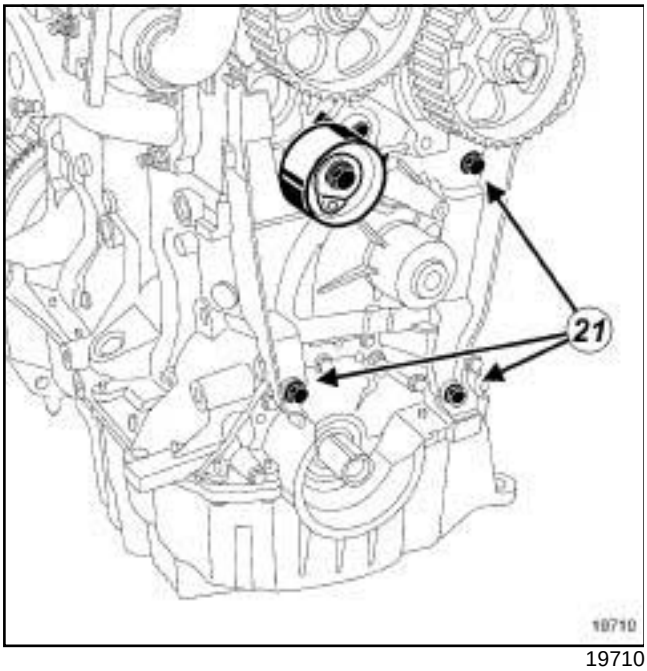

19710

❑ Remove:

- the inner timing cover bolts (**21**) ,
- the inner timing cover.

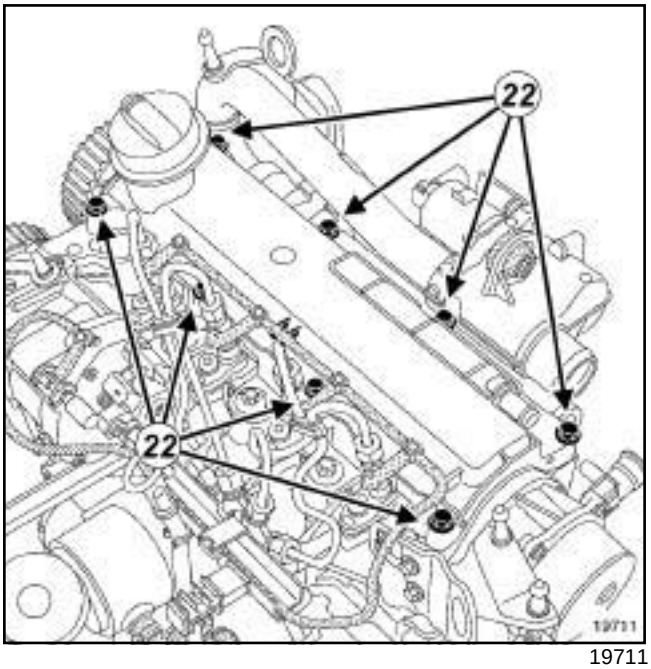

19711

❑ Remove:

- the rocker cover bolts (**22**) ,
- the rocker cover.

II - OPERATION FOR REMOVAL OF PART CONCERNED

❑

> Note:
>
> The operation to remove the cylinder head requires two people.

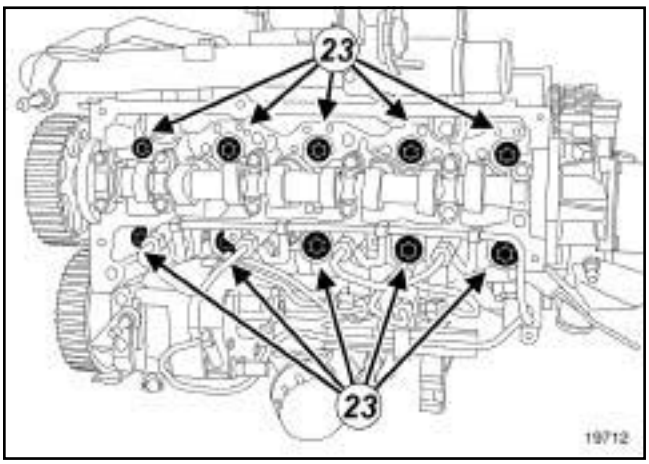

19712

❑ Remove:

- the cylinder head bolts (**23**) ,
- the cylinder head,
- the cylinder head gasket.

K9K, and 722 or 728 or 729

REFITTING

I - REFITTING PREPARATION OPERATION

❑

IMPORTANT
Wear goggles with side protectors for this operation.

IMPORTANT
Wear leaktight gloves (Nitrile type) for this operation.

WARNING
Do not scrape the joint faces of the aluminium, any damage caused to the joint face will result in a risk of leaks.

WARNING
Do not allow this product to drip onto the paintwork.

Clean the cylinder head carefully to avoid any foreign bodies entering the oil return and supply pipes.

Failure to follow this advice could lead to the blocking of the various oil inlet galleries, which would quickly result in engine damage.

WARNING
To ensure proper sealing, the gasket surfaces must be clean, dry and not greasy (avoid any finger marks).

❑ **parts always to be replaced: cylinder head bolts (10,02,01,14)**

❑ **parts always to be replaced: Cylinder head gasket (10,02,01,04)**

❑ **parts always to be replaced: rocker cover seal (10,02,01,12)**

1 - Cleaning the cylinder head joint face

❑

WARNING
Protect the oilway so that foreign bodies do not enter the oil pipes in the cylinder head.

Failure to follow this instruction could lead to the blocking of the oilways, resulting in a rapid deterioration of the camshaft.

❑ Clean the joint faces using **GREY ABRASIVE PADS** (see **Vehicle: Parts and consumables for repair**) (04B, Consumables - Products):

- of the cylinder head,

- of the cylinder block.

❑ Use **SURFACE CLEANER** (see **Vehicle: Parts and consumables for repair**) (04B, Products - Consumables) and **CLEAN CLOTHS** to degrease the joint faces:

- of the cylinder head,

- of the cylinder block.

2 - Checking the gasket face

❑ Check with a **cylinder head rule** and a **set of feeler gauges** to determine if the joint face has been deformed.

WARNING
No regrinding of the cylinder head is permitted.

❑ The maximum deformation is **0.05 mm**.

Note:

If the cylinder head is faulty:

-strip down the cylinder head (see **Cylinder head:Stripping - Restoring**) (Technical Note 6006A, 10A, Engine and cylinder block assembly),

-test the cylinder head for any cracks using the **cylinder head testing tool** (see **Cylinder head testing equipment: Use**) (Technical Note 6026A, 11A, Top and front of engine),

-rebuild the cylinder head (see **Cylinder head:Stripping - Restoring**) (Technical Note 6006A, 10A, Engine and cylinder block assembly).

K9K, and 722 or 728 or 729

3 - Cleaning the joint face of the rocker cover

❑

> **WARNING**
> Do not scrape the joint faces of the aluminium, any damage caused to the joint face will result in a risk of leaks.

> **WARNING**
> To ensure proper sealing, the gasket surfaces must be clean, dry and not greasy (avoid any finger marks).

❑ Clean the gasket surface of the cylinder head using **GREY ABRASIVE PADS** (see **Vehicle: Parts and consumables for repair**) (04B, Consumables - Products).

❑ Use **SURFACE CLEANER** (see **Vehicle: Parts and consumables for repair**) (04B, Consumables - Products) and **CLEAN CLOTHS** to degrease:

- the cylinder head joint face,
- the rocker cover housing.

II - REFITTING OPERATION FOR PART CONCERNED

❑ Bring the pistons to mid-stroke position to prevent any risk of contact with the valves when tightening the cylinder head.

> Note:
> The operation to refit the cylinder head requires two people.

> Note:
> The cylinder head gasket has a foolproofing device which must be positioned on the cylinder block inlet side.

❑ Fit:

- a new cylinder head gasket, centred by two dowels,
- the cylinder head on the cylinder block.

> **WARNING**
> In order to ensure that the bolts are correctly tightened, use a syringe to remove any oil which may be in the cylinder head mounting holes.

> **WARNING**
> Do not oil the new bolts. Be sure to oil bolts being reused.

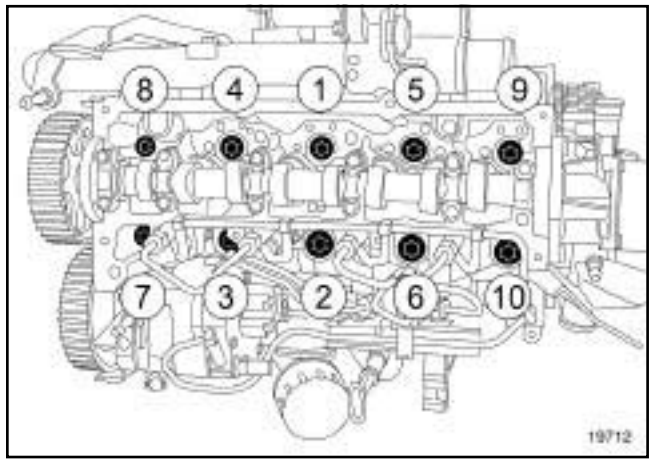

19712

❑ Refit in order new cylinder head bolts.

❑ Pretighten to torque and in order the **cylinder head bolts (initial torque) (20 N.m)**.

❑ Torque tighten in order the **cylinder head bolts (25 N.m)**.

❑ Check that all the cylinder head bolts are correctly tightened to the torque of **25 N.m**.

❑ Angle tighten in order the **cylinder head bolts (270° ± 10°)**.

K9K, and 722 or 728 or 729

III - FINAL OPERATION

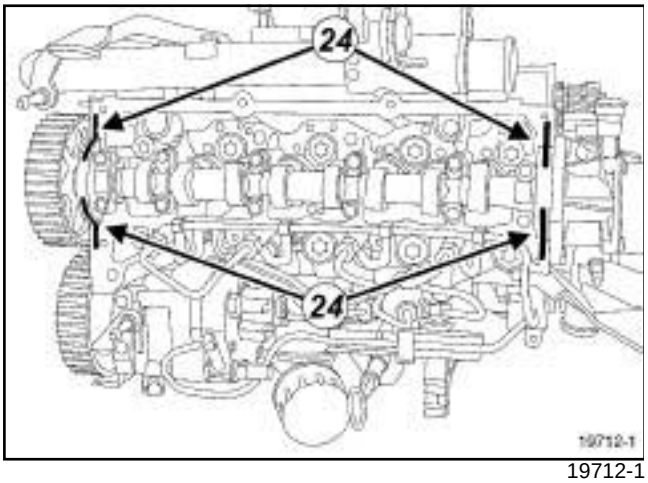

19712-1

❑

WARNING

Applying excess sealant could cause it to be squeezed out when parts are tightened. A mixture of sealant and fluid could damage certain components (engine, radiator, etc.).

❑ Place beads (**24**) of **SILICONE ADHESIVE SEALANT** (see **Vehicle: Parts and consumables for repair**) (04B, Consumables - Products) **20 mm** in diameter and **10 mm** wide.

❑ Refit the rocker cover, fitted with a new gasket.

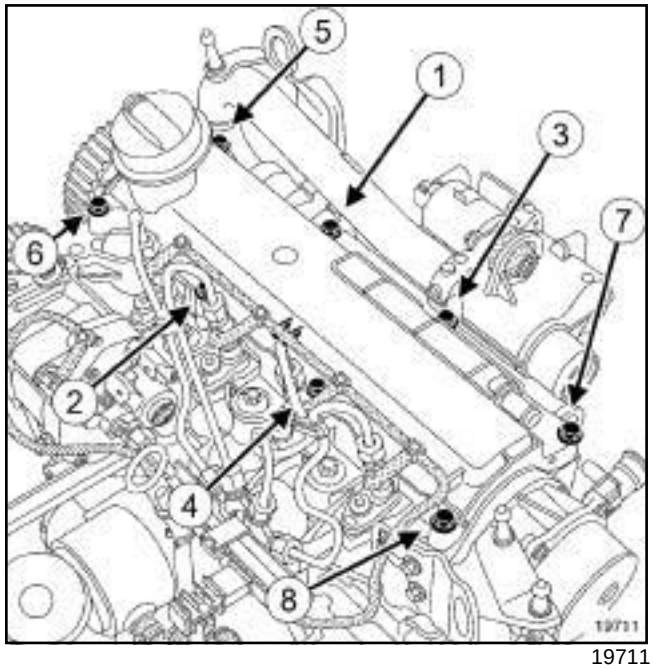

19711

❑ Tighten to torque and in order the **rocker cover bolts (10 N.m)**.

❑ Refit the turbocharger oil return pipe (see **12B**, **Turbocharging**, **Turbocharger oil pipe: Removal - Refitting**, page **12B-52**) .

❑ Connect:

- the water chamber hoses,
- brake servo vacuum pipe ,
- the coolant temperature sensor connector,
- the cooling radiator top hose.

❑ Refit the injector rail protector.

❑ Connect:

- the injector connectors,
- the heater plug connectors ,
- the injector rail pressure sensor connectors,
- the diesel fuel supply pipe on the injection pump,
- the fuel return pipe on the injection pump,
- the fuel temperature sensor,
- the flow actuator connector.

K9K, and 722 or 728 or 729

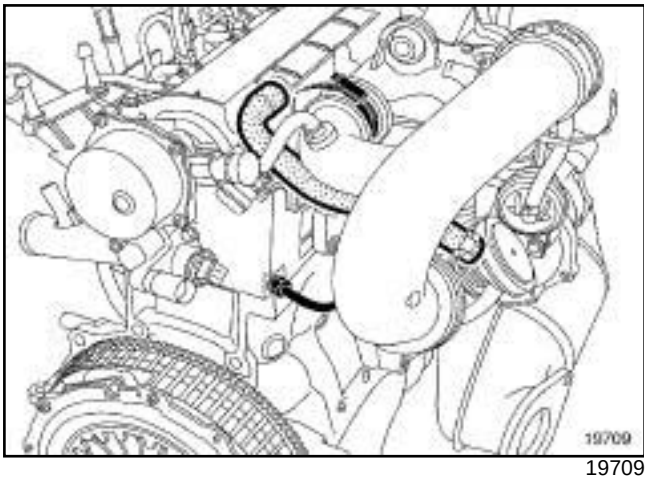

19709

❑ Connect:

- the oil vapour rebreathing pipe,
- the turbocharger air outlet pipe.

K9K, and 728 or 729

❑ Connect the intercooler air inlet pipe, aligning the marks.

❑ Refit the bolt on the intercooler air inlet pipe.

❑ Connect:

- the air temperature and pressure sensor connector,
- exhaust gas recirculation solenoid valve connector ,
- the crankshaft position sensor connector,
- the intercooler air outlet pipe,
- the turbocharging pressure regulation solenoid valve pipe.

K9K, and 722

❑ Connect:

- the oil vapour rebreathing pipe on the rocker cover,
- the air outlet pipe of the air filter unit,
- the turbocharging pressure regulation solenoid valve pipe,
- the intercooler air outlet pipe,
- the turbocharger air outlet pipe,
- exhaust gas recirculation solenoid valve connector ,
- the air temperature and pressure sensor connector.

❑ Torque tighten the **intercooler air inlet pipe clip (5.5 N.m)**.

❑ Refit:

- the catalytic converter (see **19B**, **Exhaust**, **Catalytic converter: Removal - Refitting**, page **19B-46**) ,
- the timing belt (see **11A**, **Top and front of engine**, **Timing belt: Removal - Refitting**, page **11A-18**) ,
- the accessories belt (see **11A**, **Top and front of engine**, **Accessories belt: Removal - Refitting**, page **11A-4**) ,
- the battery (see **Battery: Removal - Refitting**) (80A, Battery).

❑ Remove the tool **(Mot. 1672)**.

❑ Connect the battery (see **Battery: Removal - Refitting**) (80A, Battery).

❑ Fill and bleed the cooling system (see **19A**, **Cooling**, **Cooling circuit: Draining - Refilling**, page **19A-15**) .

❑ Refit:

- the front bumper (see **Front bumper: Removal - Refitting**) (55A, Exterior protection),
- the front section of the front wheel arch liners (see **Front wheel arch liner: Removal - Refitting**) (55A, Exterior protection),
- the front wheels (see **Wheel: Removal - Refitting**) (35A, Wheels and tyres),
- the engine undertray,
- the engine covers.

B84 or C84 or G84 or S84, and K9K, and 732 or 734

Essential special tooling	
Car. 1363	Set of trim removal levers.
Mot. 1672	Lower engine support.
Mot. 1448	Long nose pliers for hose clips.
Mot. 1453	Multiple-adjusting engine mounting support with retaining straps.

Essential equipment
cylinder head rule
set of feeler gauges
cylinder head testing tool

Tightening torques ▽	
cylinder head bolts (initial torque)	**20 N.m**
cylinder head bolts	**25 Nm**
cylinder head bolts	**270° ± 10°**
rocker cover bolts	**10 N.m**
hose clip on the stainless steel pipe	**5.5 N.m**
intercooler air outlet pipe clips	**5.5 N.m**
alternator bolts	**21 Nm**

IMPORTANT

To avoid all risk of damage to the systems, apply the safety and cleanliness instructions and operation recommendations before carrying out any repair (see **13B**, **Diesel injection**, **Diesel injection: Precautions for repair**, page **13B-12**) .

IMPORTANT

Use the diagnostic tool before any operation is carried out on the injection circuit to check:

- that the rail is not under pressure,
- that the fuel temperature is not too high.

Working on the circuit with the engine running is strictly forbidden.

Note:

Procedure for removing the air inlet duct (risk of leaking and slipping if this procedure is not complied with):

- detach the hose using the **(Car. 1363)**,
- do not use degreaser, brake cleaning agents, or any other products,
- clean the bearing face on the intercooler with a dry, lint-free cloth,
- always replace the clip with a new one,
- place the clip in the same position if the hose is not replaced,
- it is essential to replace the hose and/or the rigid pipe in the event of damage.

REMOVAL

I - REMOVAL PREPARATION OPERATION

❑ Position the vehicle on a two-post lift (see **Vehicle: Towing and lifting**) (02A, Lifting equipment).

❑ Remove the engine covers.

❑ Disconnect the battery (see **Battery : Removal - Refitting**) (80A, Battery).

❑ Remove:

- the engine undertray bolts,
- the engine undertray.

B84 or C84 or G84 or S84, and K9K, and 732 or 734

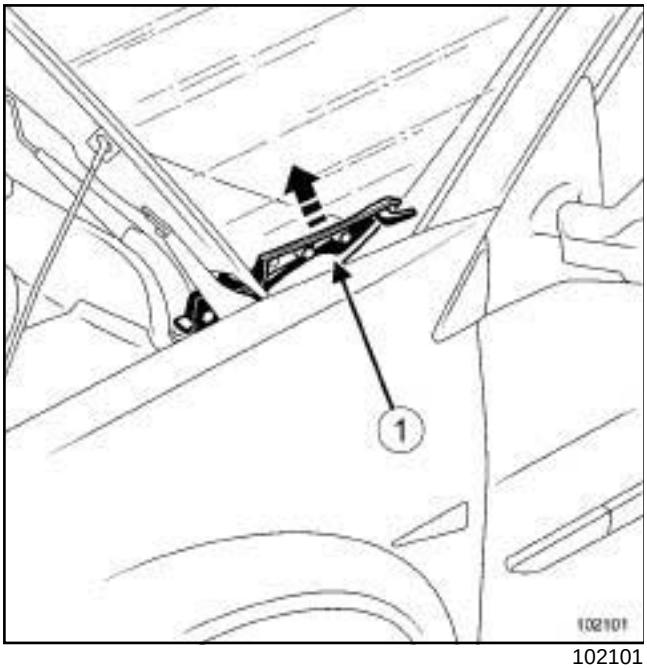

102101

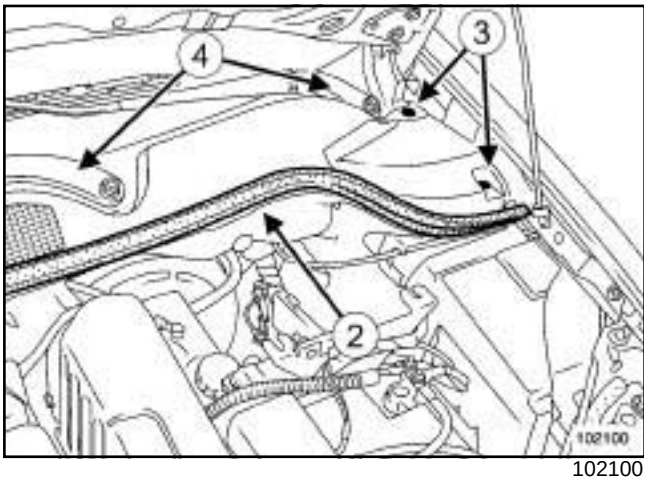

102100

❑ Unclip the trim (**1**) .

❑ Remove:

- the seal (**2**) ,
- plastic rivets (**3**) ,
- the windscreen wiper arms (**4**) (see **Windscreen wiper blade: Removal - Refitting**) (85A, Wiping - Washing),
- the front wheels (see **Wheel: Removal - Refitting**) (35A, Wheels and tyres),
- the front section of the front wheel arch liners (see **Front wheel arch liner: Removal - Refitting**) (55A, Exterior protection),
- the accessories belt (see **11A**, **Top and front of engine**, **Accessories belt: Removal - Refitting**, page **11A-4**) ,
- the timing belt (see **11A**, **Top and front of engine**, **Timing belt: Removal - Refitting**, page **11A-18**) ,
- the front bumper (see **Front bumper: Removal - Refitting**) (55A, Exterior protection),
- the catalytic converter (see **19B**, **Exhaust**, **Catalytic converter: Removal - Refitting**, page **19B-46**) ,
- the turbocharger oil return pipe (see **12B**, **Turbocharging**, **Turbocharger oil pipe: Removal - Refitting**, page **12B-52**) .

❑ Drain the cooling system (see **19A**, **Cooling**, **Cooling circuit: Draining - Refilling**, page **19A-15**) .

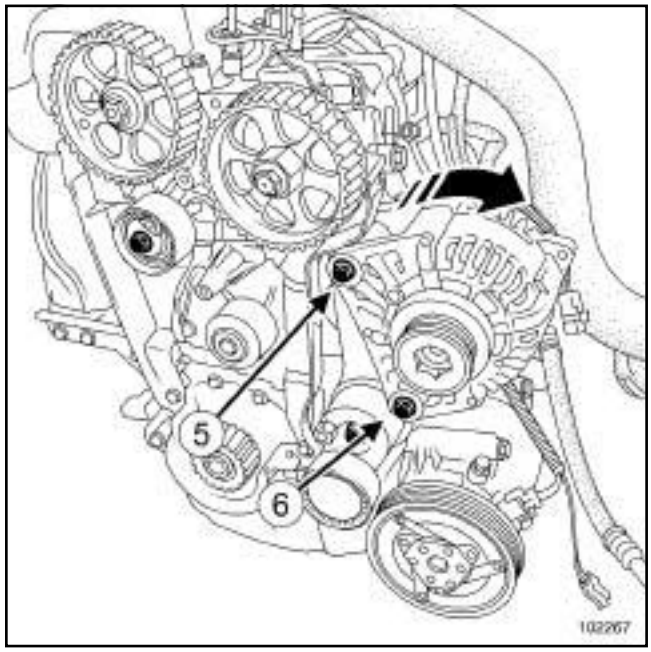

102267

❑ Remove:

- the alternator upper bolt (**5**) ,
- the alternator lower bolt (**6**) .

B84 or C84 or G84 or S84, and K9K, and 732 or 734

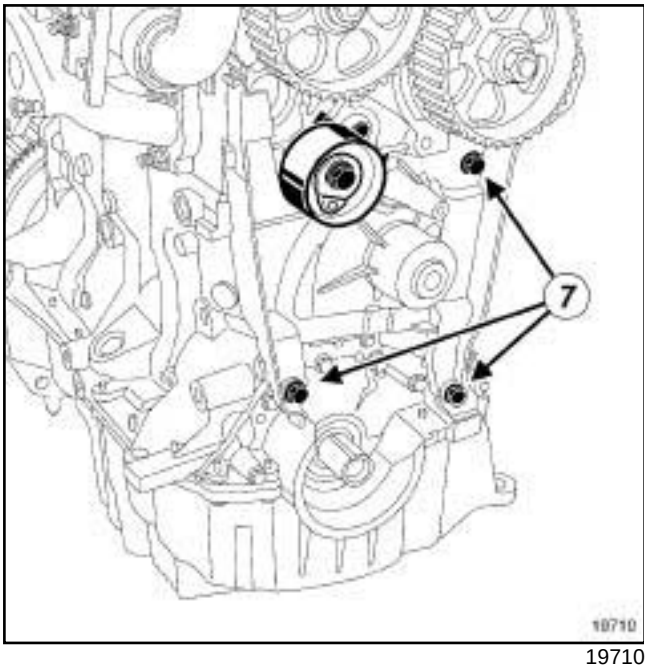

19710

❑ Remove:

- the inner timing cover bolts (**7**) ,
- the inner timing cover.

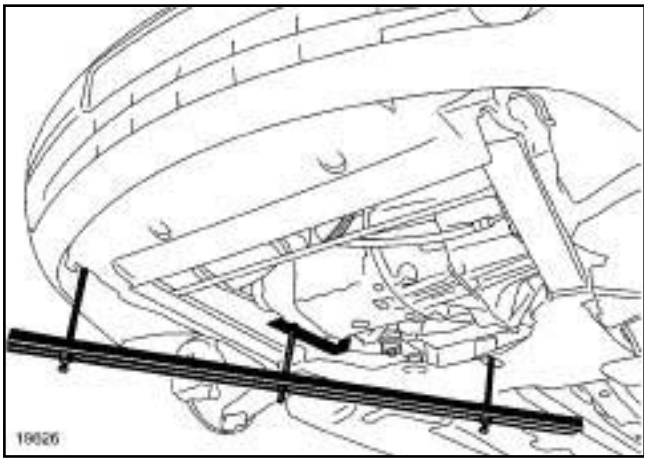

19626

❑ Position the **(Mot. 1672)**.

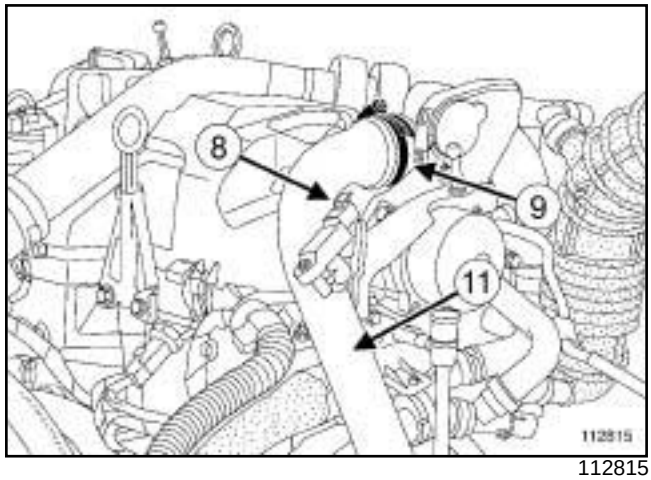

112815

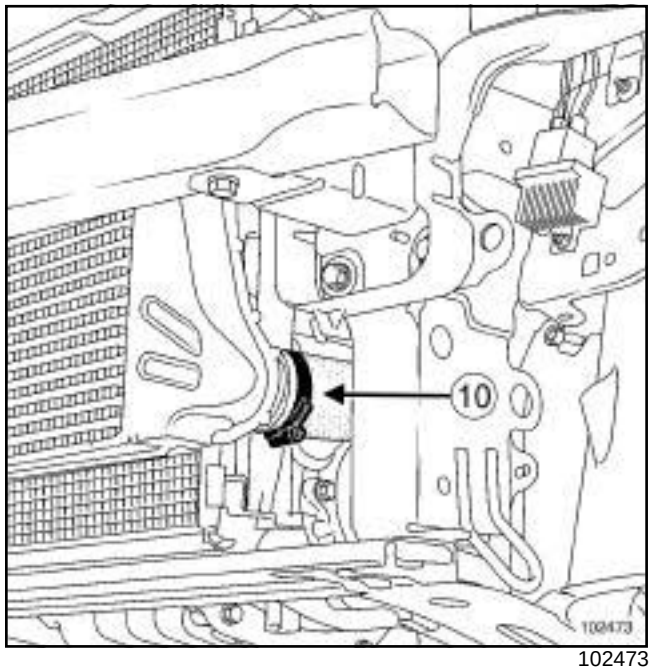

102473

❑ Disconnect the air inlet pressure sensor connector (**8**) .

❑ Undo the clips (**9**) and (**10**) .

❑ Remove the air inlet duct (**11**) .

B84 or C84 or G84 or S84, and K9K, and 732 or 734

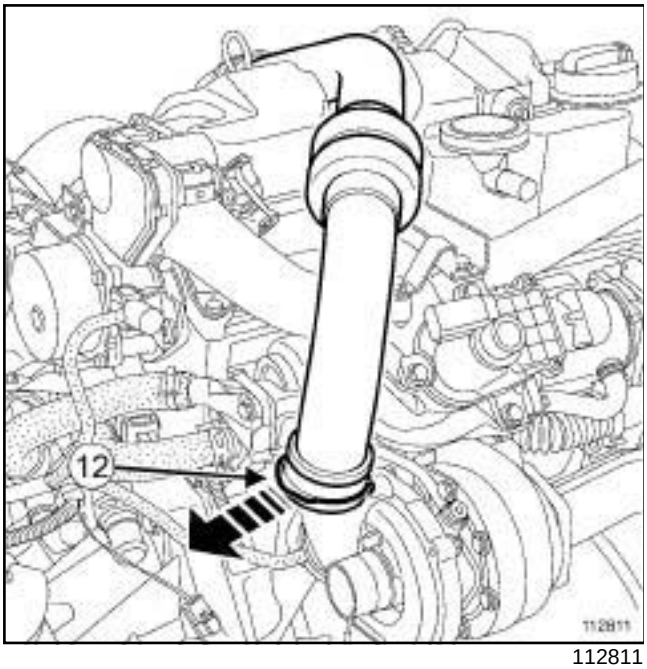

112811

❑ Pull out clip (**12**) .

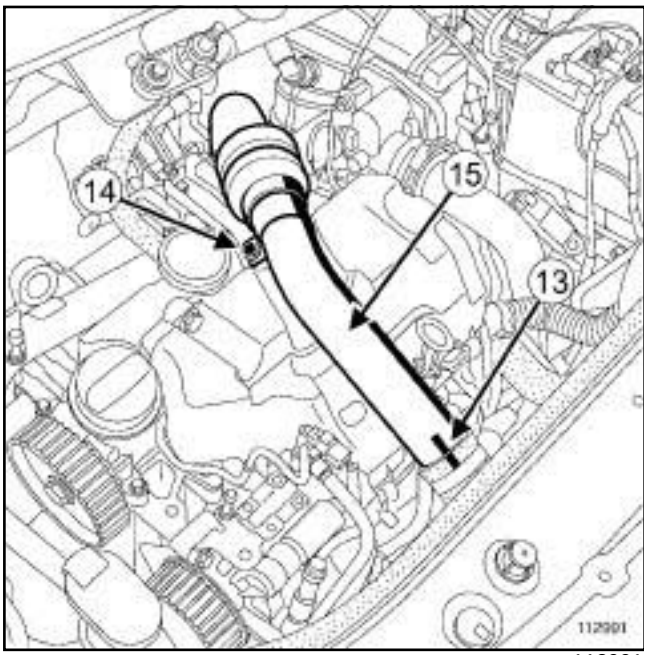

112991

❑ Using an indelible pen, draw a mark (**13**) on the intercooler air inlet pipe between the stainless steel pipe and the hose.

❑ Detach the hose from the stainless steel pipe.

❑ Remove:

- the bolt (**14**) on the intercooler inlet air pipe,
- the intercooler air inlet pipe (**15**) .

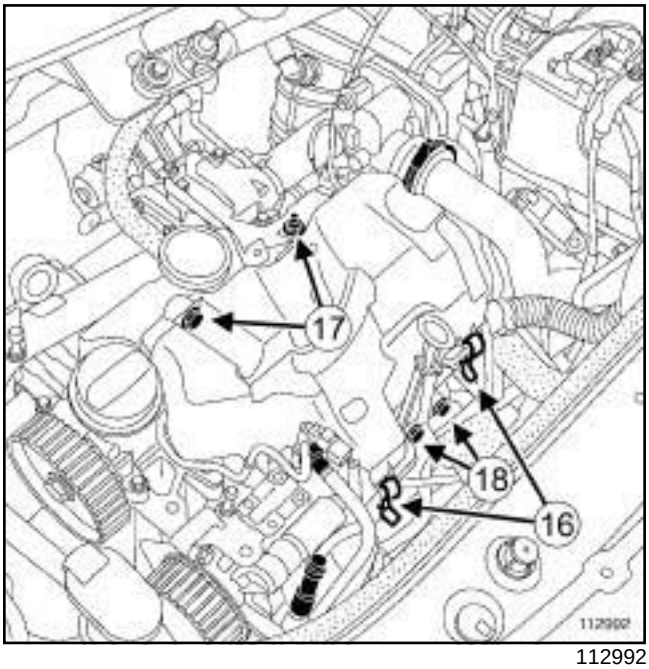

112992

❑ Unclip the injection rail protector cover (**16**) .

❑ Remove:

- the injection rail protector cover,
- the injector rail protector cover bolt and nut (**17**) ,
- the dipstick,
- the dipstick duct bolts (**18**) .

❑ Move the dipstick duct to one side.

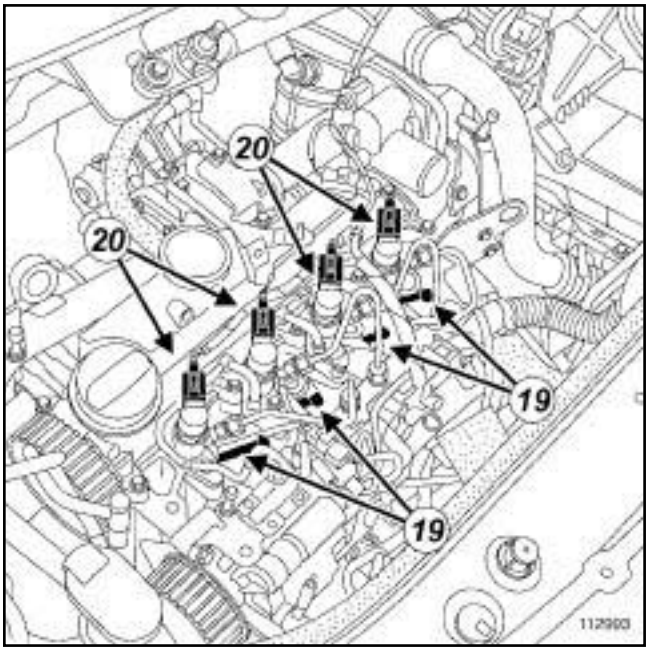

112993

❑ Disconnect:

- the heater plug connectors (**19**) ,

B84 or C84 or G84 or S84, and K9K, and 732 or 734

- the connectors (**20**) from the injectors.

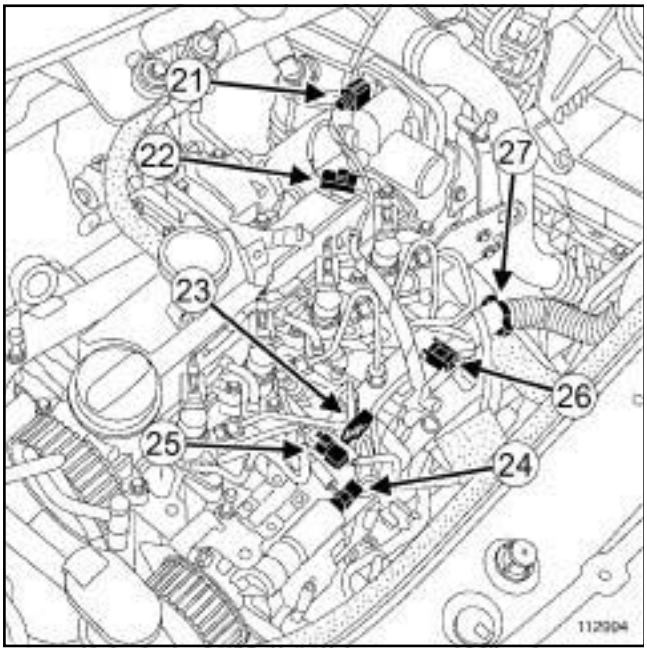

112994

❑ Disconnect:

- the damper valve connector (**21**) ,
- the connector (**22**) from the camshaft position sensor,
- the pressure regulation solenoid valve connector (**23**) ,
- the (**24**) flow regulation solenoid valve connector,
- the fuel temperature sensor connector (**25**) ,
- the injector rail pressure sensor connector.

❑ Unclip the retaining clip (**26**) of the injection wiring.

❑ Remove the nut (**27**) of the injection wiring clip.

❑ Detach the injection wiring.

❑ Tilt the alternator against the cooling radiator assembly.

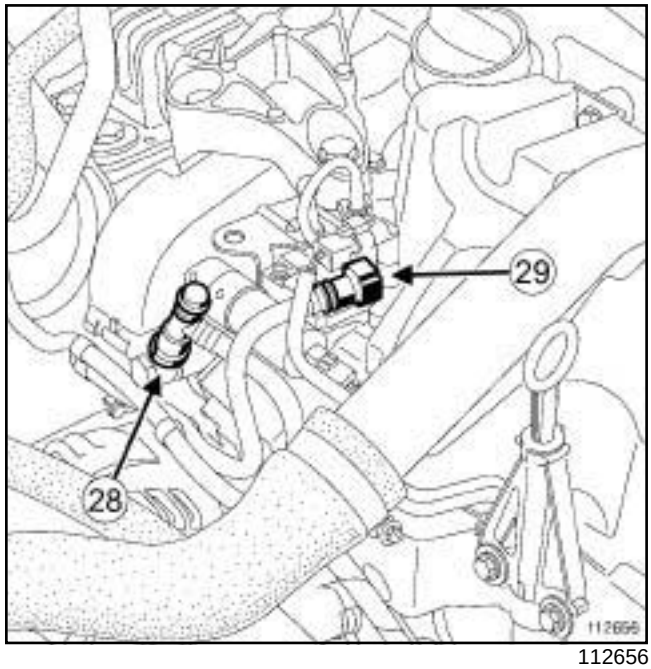

112656

❑ Clean the unions on the fuel supply and return pipes (see **13B**, **Diesel injection**, **Diesel injection: Precautions for repair**, page **13B-12**) .

WARNING

Do not blast with compressed air once the fuel circuit is open, otherwise impurities may enter the system. Only use cleaning cloths.

Note:

Make preparations for fuel outflow. Clean with new cloths.

❑ Disconnect:

- the fuel supply pipe (**28**) ,
- the fuel return pipe (**29**) .

❑ Fit suitable blanking plugs.

B84 or C84 or G84 or S84, and K9K, and 732 or 734

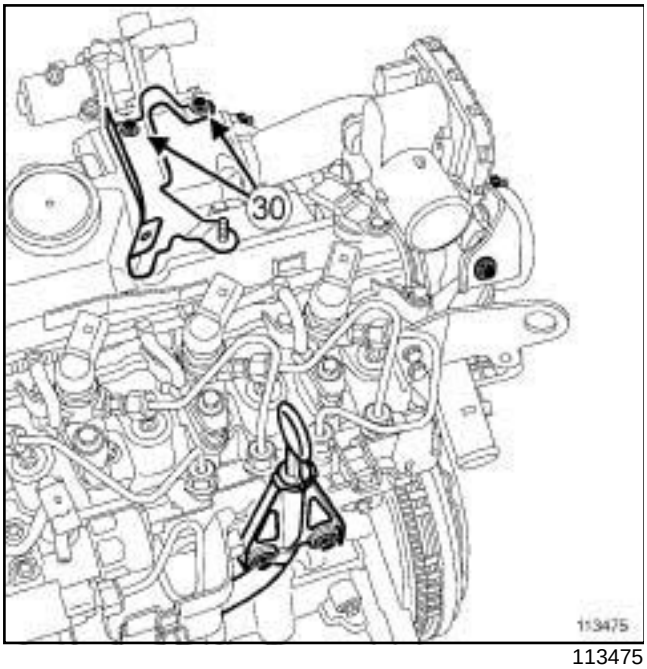

113475

❑ Remove:

- the bolts (**30**) of the bracket on the exhaust gas recirculation cooler,
- the bracket from the exhaust gas recirculation cooler.

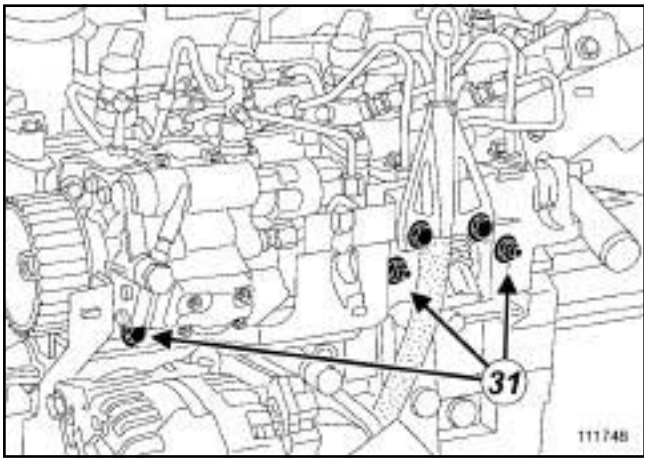

111748

❑ Remove the bolt and nuts (**31**) from the injector rail protector cover support.

❑ Unclip the drain pipe from the injector rail protector cover support.

❑ Remove:

- the injection rail protector cover support,
- the damper valve (see **12A**, **Fuel mixture**, **Air inlet flap: Removal - Refitting**, page **12A-33**) .

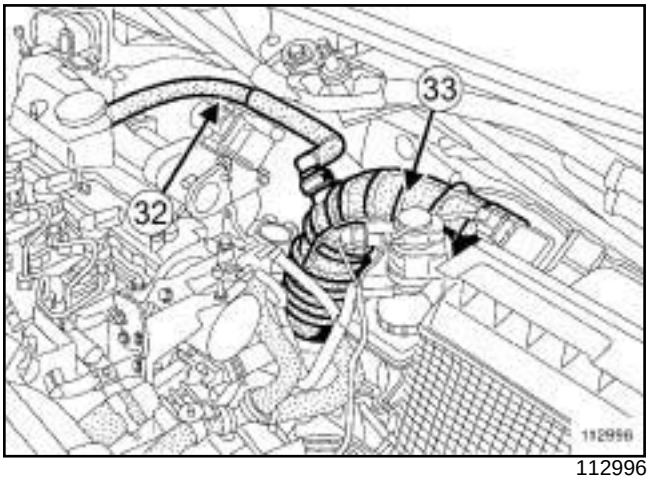

112996

❑ Disconnect the oil vapour rebreathing pipe (**32**) on the rocker cover side.

❑ Remove the air outlet pipe from the air filter box (**33**) .

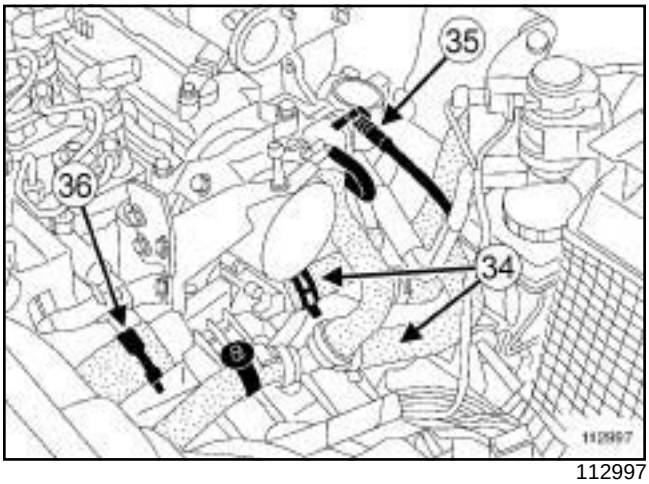

112997

❑ Disconnect:

- the exhaust gas recirculation solenoid valve connector,
- the hoses (**34**) from the water chamber using the **(Mot. 1448)**,
- the vacuum pipe (**35**) from the brake servo on the vacuum pump side,
- the connector of the temperature sensor on the water chamber,
- the cooling radiator top hose on the cylinder head water chamber (**36**) using the **(Mot. 1448)**,
- the turbocharging pressure regulation solenoid valve pipe at the vacuum pump end,
- the turbocharging pressure regulation solenoid valve pipe at the pressure regulation valve end.

B84 or C84 or G84 or S84, and K9K, and 732 or 734

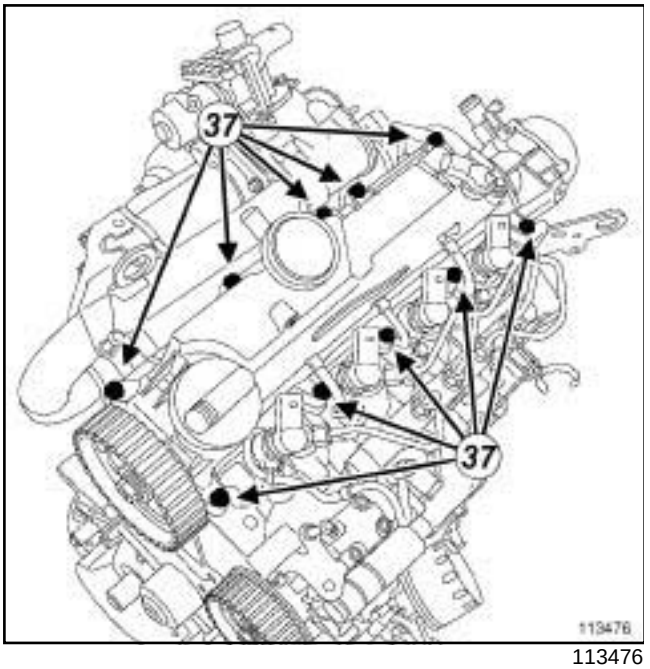

113476

❑ Remove:

- the rocker cover bolts (**37**) ,
- the rocker cover.

II - OPERATION FOR REMOVAL OF PART CONCERNED

❑

> Note:
>
> The operation to remove the cylinder head requires two people.

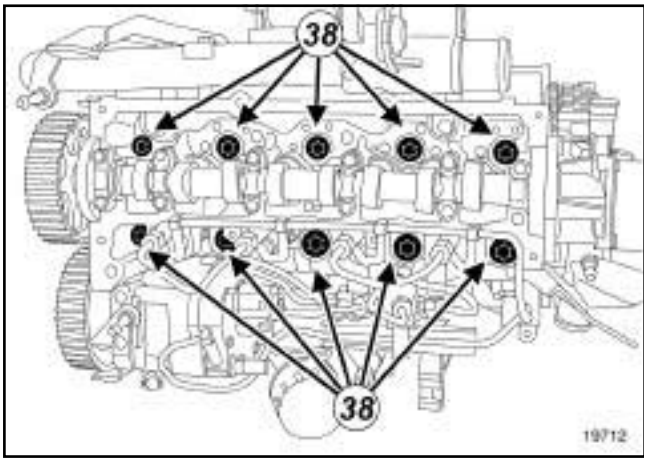

19712

❑ Remove:

- the cylinder head bolts (**38**) ,
- the cylinder head,
- the cylinder head gasket.

REFITTING

I - REFITTING PREPARATION OPERATION

❑ **parts always to be replaced: Cylinder head gasket (10,02,01,04)**

❑ **parts always to be replaced: cylinder head bolts (10,02,01,14)**

❑ **parts always to be replaced: rocker cover seal (10,02,01,12)**

1 - Cleaning the cylinder head

❑

> **WARNING**
>
> Do not scrape the joint faces of the aluminium, any damage caused to the joint face will result in a risk of leaks.

❑ Clean the joint faces with **SUPER CLEANER FOR JOINT FACES** to dissolve any part of the seal still adhering (see **Vehicle: Parts and ingredients for the repairwork**) (04B, Consumables - Products).

❑ Apply the product to the part to be cleaned, wait approximately ten minutes then remove the residue with a wooden spatula.

> **WARNING**
>
> Protect the oilway so that foreign bodies do not enter the oil pipes in the cylinder head.
>
> Failure to follow this instruction could lead to the blocking of the oilways, resulting in a rapid deterioration of the camshaft.

2 - Checking the gasket face

❑ Check with a **cylinder head rule** and a **set of feeler gauges** to determine if the joint face has been deformed.

The maximum deformation is **0.05 mm**.

> **WARNING**
>
> No regrinding of the cylinder head is permitted.

❑ For the procedure of stripping down the cylinder head (see **Cylinder head: Dismantling**) (Technical Note 6006A, 10A, Engine and peripherals).

❑ Test the cylinder head to detect any possible cracks using **cylinder head testing tool**.

B84 or C84 or G84 or S84, and K9K, and 732 or 734

II - REFITTING OPERATION FOR PART CONCERNED

❏

WARNING
To ensure proper sealing, the gasket surfaces must be clean, dry and not greasy (avoid any finger marks).

Note:
The operation to refit the cylinder head requires two people.

❏ Bring the pistons to mid-stroke position to prevent any risk of contact with the valves when tightening the cylinder head.

❏ Fit a new cylinder head seal, centred by two dowels.

❏ Refit the cylinder head.

WARNING
In order to ensure that the bolts are correctly tightened, use a syringe to remove any oil which may be in the cylinder head mounting holes.

WARNING
Do not oil the new bolts. Be sure to oil bolts being reused.

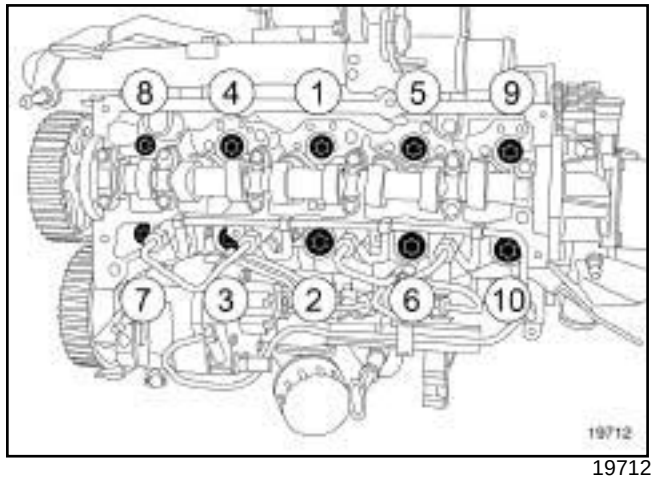

19712

❏ Refit new cylinder head bolts in order.

❏ Pretighten to torque and in order the **cylinder head bolts (initial torque) (20 N.m)**.

❏ Tighten to torque and in order the **cylinder head bolts (25 Nm)**.

❏ Check that all the cylinder head bolts are correctly tightened to the torque of **25 N.m**.

❏ Angle tighten in order the **cylinder head bolts (270° ± 10°)**.

III - FINAL OPERATION

❏ Fit a new rocker cover seal.

B84 or C84 or G84 or S84, and K9K, and 732 or 734

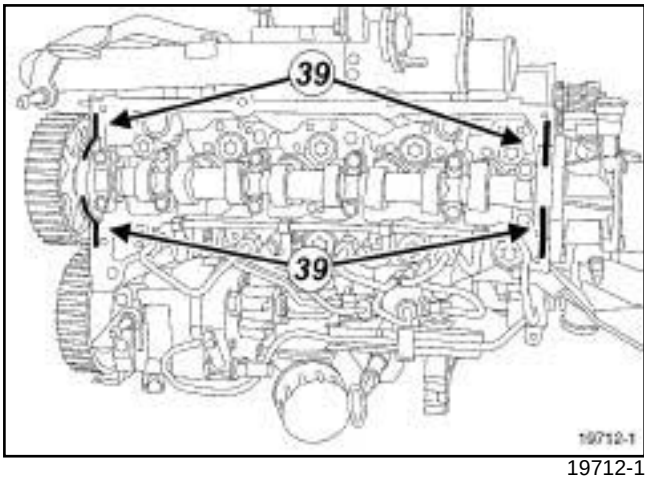

19712-1

❑

WARNING

To ensure proper sealing, the gasket surfaces must be clean, dry and not greasy (avoid any finger marks).

WARNING

Applying excess sealant could cause it to be squeezed out when parts are tightened. A mixture of sealant and fluid could damage certain components (engine, radiator, etc.).

❑ Apply beads (**39**) of **SILICONE ADHESIVE SEALANT** (see **Vehicle: Parts and ingredients for the repairwork**) (04B, Consumables - Products) with a diameter of **2 mm**.

B84 or C84 or G84 or S84, and K9K, and 732 or 734

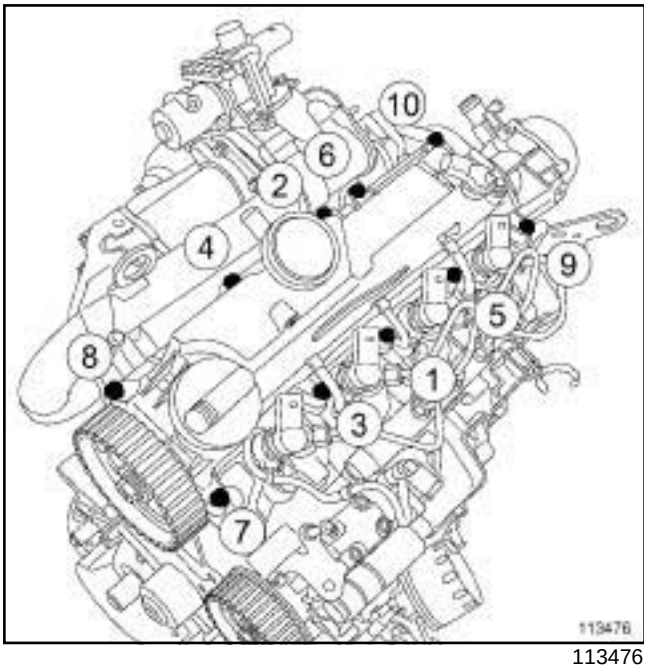

113476

- ❑ Refit the rocker cover.
- ❑ Tighten to torque and in order the **rocker cover bolts (10 N.m)**.
- ❑ Connect:
  - the turbocharging pressure regulation solenoid valve pipe at the pressure regulation valve end,
  - the turbocharging pressure regulation solenoid valve hose at the vacuum pump end,
  - the radiator top hose on the cylinder head water chamber using the **(Mot. 1448)**.
- ❑ Refit:
  - the air outlet pipe of the air filter unit,
  - the oil vapour rebreathing pipe,
  - the damper valve (see **12A**, **Fuel mixture**, **Air inlet flap: Removal - Refitting**, page **12A-33**) ,
  - the injector rail protector cover support.
- ❑ Clip the fuel drain pipe onto the injector rail protector support.
- ❑ Refit:
  - the injection rail protector cover mounting bracket,
  - the bolts of the injector rail protector cover mounting bracket.
- ❑ Remove the blanking plugs.
- ❑ Connect:
  - the fuel supply pipe,
  - the fuel return pipe.
  - injector rail pressure sensor connector,
  - the fuel temperature sensor connector,
  - the flow regulation solenoid valve connector,
  - the pressure regulation solenoid valve connector,
  - the camshaft position sensor connector,
  - the damper valve connector,
  - the heater plugs connector,
  - the injectors' connector.
- ❑ Position the injection wiring.
- ❑ Refit the nut of the injection wiring clip.
- ❑ Clip the retaining clip of the injection wiring.
- ❑ Refit:
  - dipstick guide ,
  - the injector rail protector cover,
  - the intercooler air inlet pipe clip,
  - the stainless steel pipe between the intercooler hose and the turbocharger, aligning the marks,
  - the intercooler air outlet pipe.
- ❑ Torque tighten the **hose clip on the stainless steel pipe (5.5 N.m)**.
- ❑ Clip the intercooler air inlet pipe on the turbocharger.
- ❑ Torque tighten the **intercooler air outlet pipe clips (5.5 N.m)**.
- ❑ Connect:
  - the air pressure sensor,
  - the exhaust gas recirculation solenoid valve connector.
- ❑ Position the **(Mot. 1453)**.
- ❑ Refit:
  - the inner timing cover,
  - the alternator upper bolt,
  - the alternator lower bolt,
  - the turbocharger oil return pipe (see **12B**, **Turbocharging**, **Turbocharger oil pipe: Removal - Refitting**, page **12B-52**) .
- ❑ Torque tighten the **alternator bolts (21 Nm)**.
- ❑ Refit:
  - the catalytic converter (see **19B**, **Exhaust**, **Catalytic converter: Removal - Refitting**, page **19B-46**) ,
  - the timing belt (see **11A**, **Top and front of engine**, **Timing belt: Removal - Refitting**, page **11A-18**) ,

B84 or C84 or G84 or S84, and K9K, and 732 or 734

- the accessories belt (see **11A**, **Top and front of engine**, **Accessories belt: Removal - Refitting**, page **11A-4**) ,
- the front wheel arch liners (see **Front wheel arch liner: Removal - Refitting**) (55A, Exterior protection),
- the front wheels (see **Wheel: Removal - Refitting**) (35A, Wheels and tyres),
- the windscreen wiper arms (see **Windscreen wiper blade: Removal - Refitting**) (85A, Wiping - Washing),
- the seal,
- plastic rivets,
- the front bumper (see **Front bumper: Removal - Refitting**) (55A, Exterior protection),
- the engine undertray.

❑ Connect the battery (see **Battery: Removal - Refitting**) (80A, Battery).

❑ Fill and bleed the cooling system (see **19A**, **Cooling**, **Cooling circuit: Draining - Refilling**, page **19A-15**) .

❑ Refit the engine covers.

F4R, and 770 or 771 or 776

Essential special tooling	
Mot. 1672	Lower engine support.
Mot. 1509	Camshaft sprocket locking tool.
Mot. 1509-01	Conversion kit for tool Mot.1509 or Mot.1801
Mot. 1448	Long nose pliers for hose clips.
Mot. 1517	Camshaft seal fitting tool.
Mot. 1512	Exhaust camshaft oil seal fitting tool (28 x 47).

Essential equipment
workshop hoist
load balancer
cylinder head rule
set of feeler gauges
cylinder head testing tool

Tightening torques ▽	
nuts	**80 N.m**
cylinder head bolts (initial torque)	**30 N.m**
cylinder head bolts	**230° ± 6°**
new or original oil separator bolts (in tapped holes)	**10 N.m**
new oil separator bolts (in non-tapped holes)	**15 N.m**

IMPORTANT

To avoid all risk of damage to the systems, apply the safety and cleanliness instructions and operation recommendations before carrying out any repair:

- (see **13B**, **Diesel injection**, **Diesel injection: Precautions for repair**, page **13B-12**) ,
- (see **Vehicle: Precautions for repair**) (01D, Mechanical introduction).

IMPORTANT

Use the diagnostic tool before any operation is carried out on the injection circuit to check:

- that the rail is not under pressure,
- that the fuel temperature is not too high.

Working on the circuit with the engine running is strictly forbidden.

REMOVAL

I - REMOVAL PREPARATION OPERATION

❑ Position the vehicle on a two-post lift (see **Vehicle: Towing and lifting**) (02A, Lifting equipment).

❑ Remove:

- the engine covers,
- the battery (see **Battery: Removal - Refitting**) (80A, Battery),
- the battery tray (see **Battery tray: Removal - Refitting**) (80A, Battery),
- the bonnet (see **Bonnet: Removal - Refitting**) (48A, Non-side opening elements),
- the scuttle panel grille (see **Scuttle panel grille: Removal - Refitting**) (55A, Exterior protection).

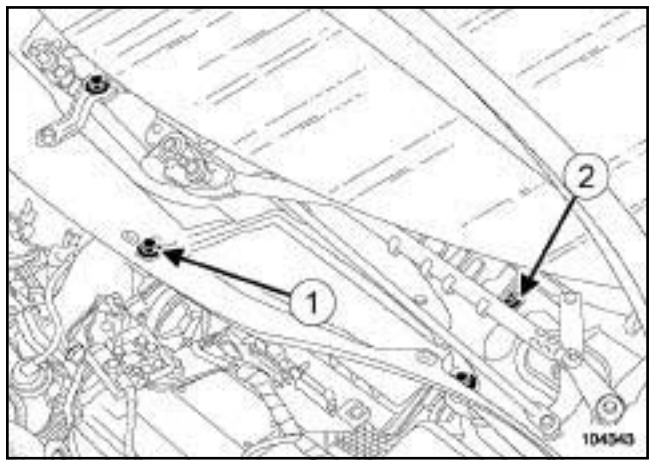

104343

❑ Remove:

- the air filter access panel bolts (**1**) ,
- the air filter access panel,
- the bolt (**2**) from the scuttle panel partition.

F4R, and 770 or 771 or 776

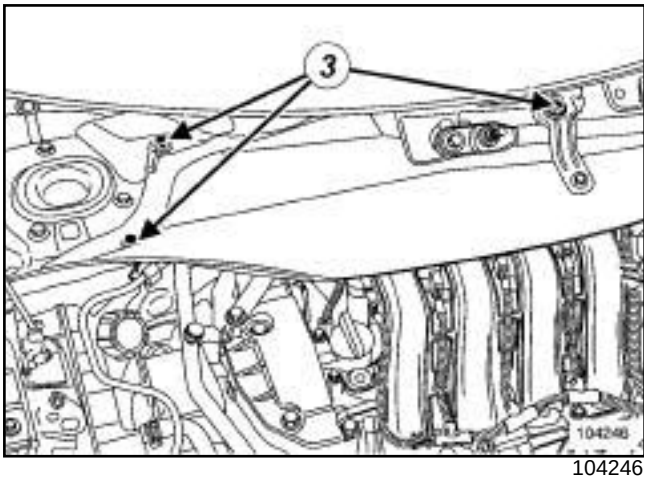

104246

❑ Remove:

- the bolts (**3**) from the scuttle panel partition,
- the scuttle panel partition,
- the windscreen wiper mechanism (see **Windscreen wiper mechanism: Removal - Refitting**) (85A, Wiping - Washing),
- the front bumper (see **Front bumper: Removal - Refitting**) (55A, Exterior protection),
- the engine undertray bolts,
- the engine undertray.

❑ Drain the engine cooling system (see **19A**, **Cooling**, **Cooling circuit: Draining - Refilling**, page **19A-15**) .

❑ Remove:

- the front wheels (see **Wheel: Removal - Refitting**) (35A, Wheels and tyres),
- the accessories belt (see **11A**, **Top and front of engine**, **Accessories belt: Removal - Refitting**, page **11A-4**) ,
- the catalytic pre-converter (see **19B**, **Exhaust**, **Catalytic pre-converter: Removal - Refitting**, page **19B-29**) ,
- the starter (see **16A**, **Starting - Charging**, **Starter: Removal - Refitting**, page **16A-21**) .

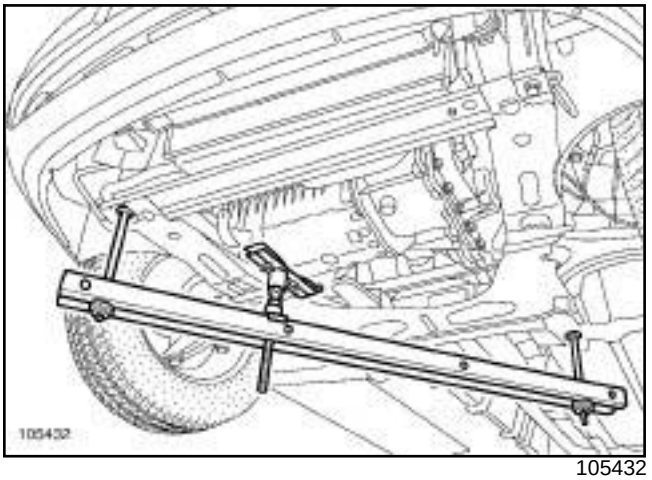

105432

❑ Fit the engine support **(Mot. 1672)**.

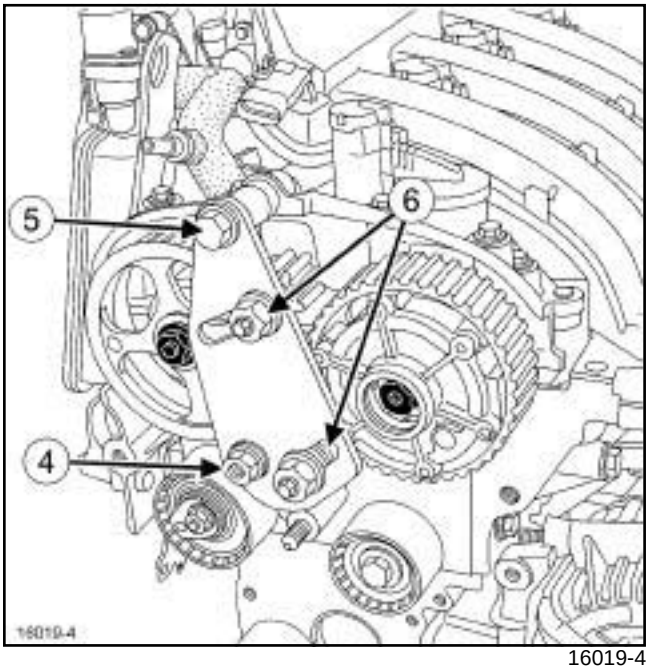

16019-4

❑ Fit the **(Mot. 1509)** with the sprocket **(Mot. 1509-01)**.

❑ Tighten the collar nut (**4**) and the bolt (**5**) , then bring the sprockets of the tool **(Mot. 1509)** into contact with the camshaft pulleys whilst torque tightening the **nuts (80 N.m)** (**6**) .

❑ Remove the blanking cover from the inlet camshaft dephaser using a **14 mm** Allen key.

F4R, and 770 or 771 or 776

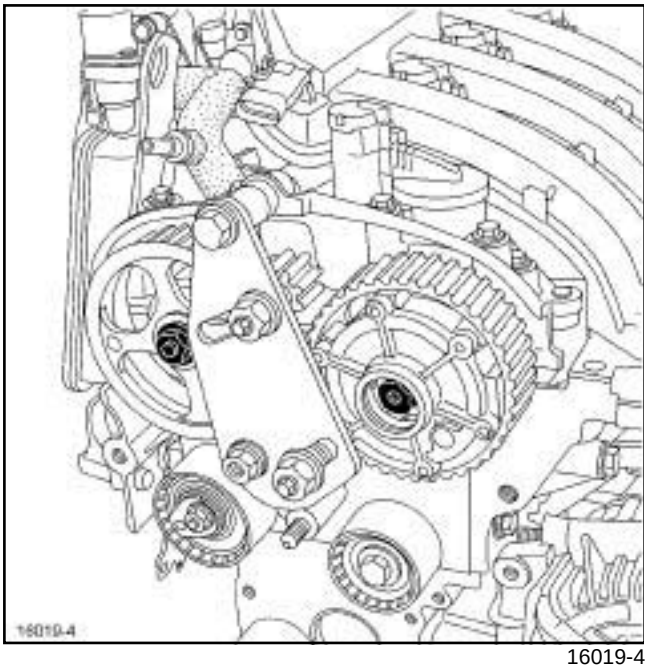

16019-4

❑ Remove:

- the exhaust camshaft pulley nut,
- the inlet camshaft dephaser bolt.

❑ Loosen the stud from the nut if necessary (see **11A**, **Top and front of engine**, **Camshaft: Removal - Refitting**, page **11A-172**) .

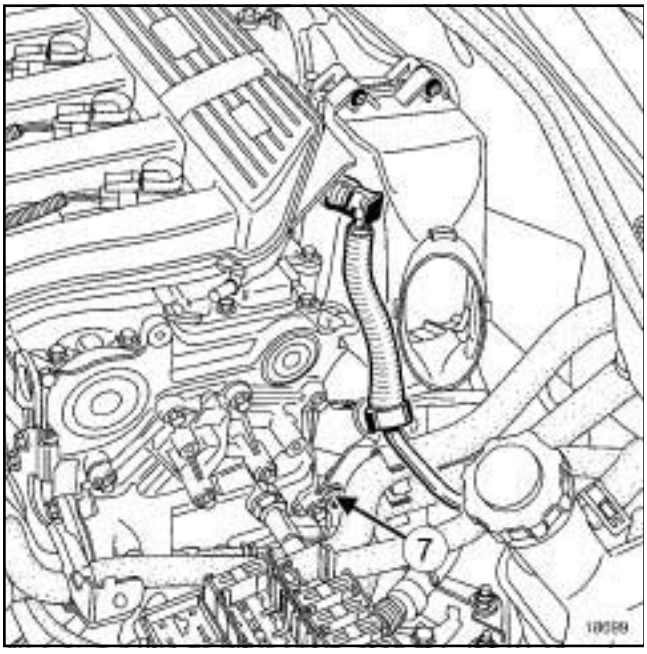

18699

❑ Remove the bracket bolt (**7**) .

❑ Remove the bracket.

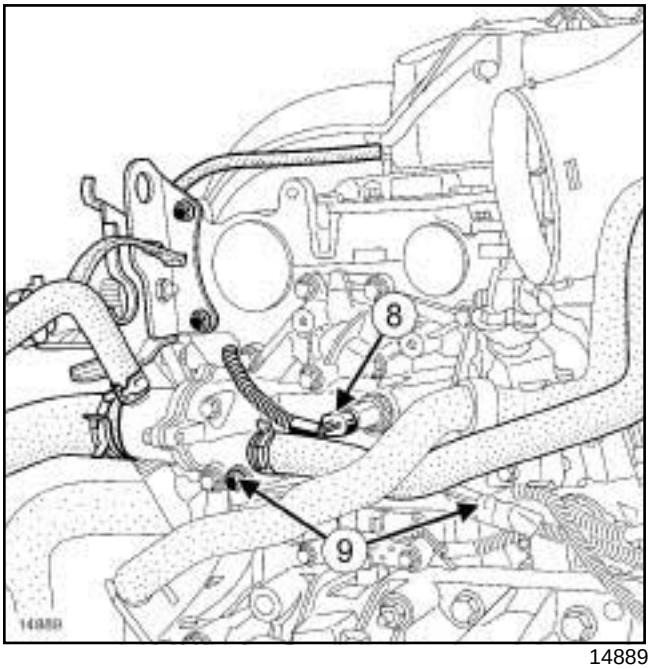

14889

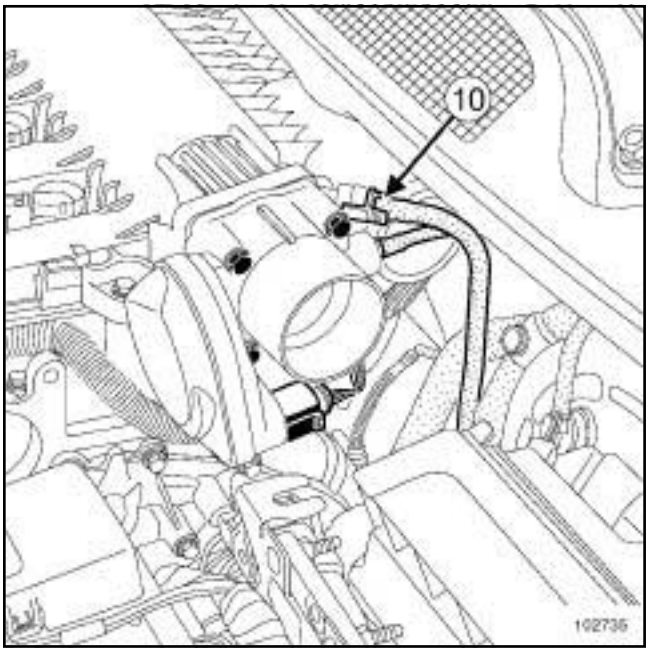

102735

❑ Remove the bolts (**8**) from the electrical wiring support.

❑ Disconnect:

- the coolant temperature sensor connector (**9**) ,
- the water chamber pipes using the tool **(Mot. 1448)**,
- the brake servo vacuum pipe (**10**) from the inlet distributor side.

❑ Separate the wiring bracket assembly.

F4R, and 770 or 771 or 776

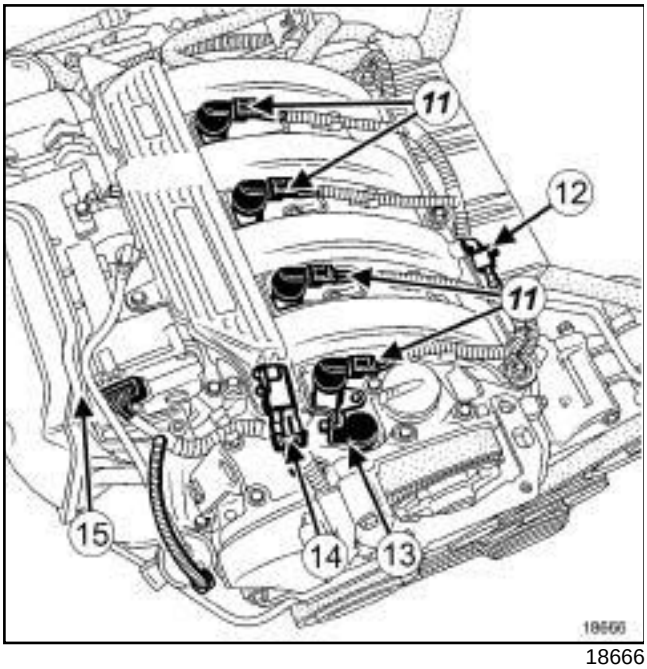

18666

❑ Disconnect:

- the ignition coil connectors (**11**) ,
- the connector (**12**) from the air temperature sensor,
- the camshaft dephaser connector (**13**) ,
- the inlet distributor pressure sensor connector (**14**) ,
- the fuel vapour recirculation solenoid valve pipe (**15**) ,
- the injector connectors,
- the upstream oxygen sensor connector.

❑ Unclip the electrical wiring clip.

❑ Move the electrical wiringto one side.

❑ Remove:

- the ignition coils,
- the spark plugs,
- the dephaser solenoid valve.

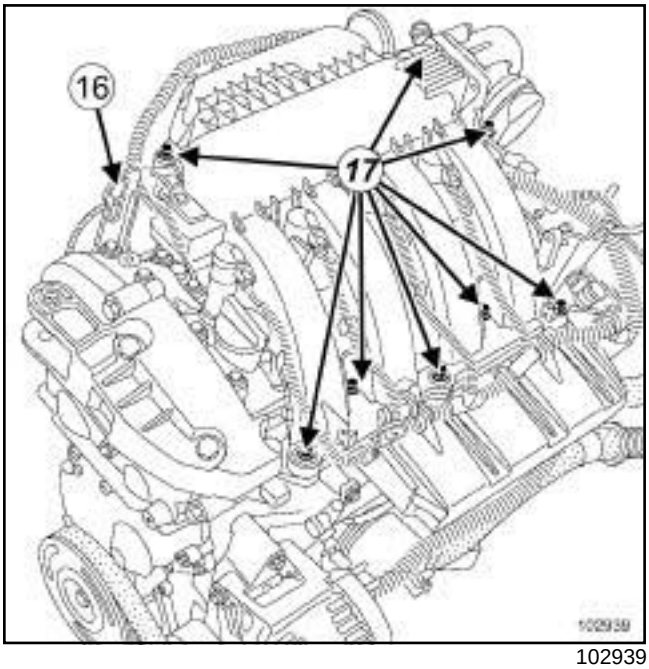

102939

❑ Remove:

- the engine lifting bracket (**16**) on the timing end,
- the inlet distributor bolts (**17**) ,
- the inlet distributor.

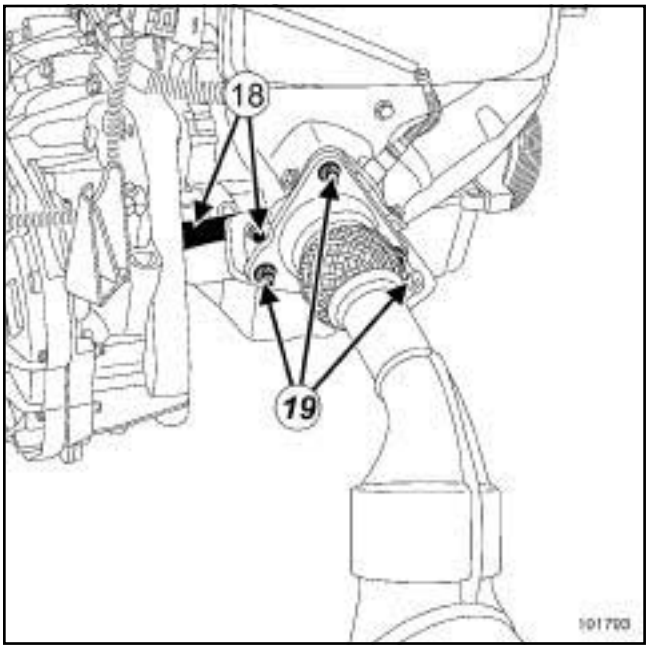

101793

❑ Remove:

- the catalytic converter - gearbox stay bolts (**18**) ,
- the catalytic converter/gearbox strut,
- the nuts (**19**) from the exhaust pipe.

F4R, and 770 or 771 or 776

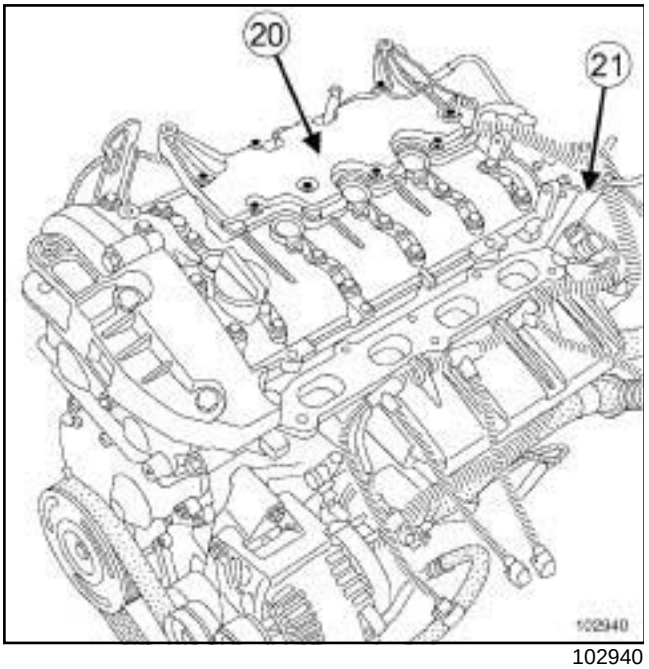

102940

❑ Remove:

- the oil separator bolts,
- the oil separator (**20**) ,
- the lifting bracket on the flywheel end (**21**) .

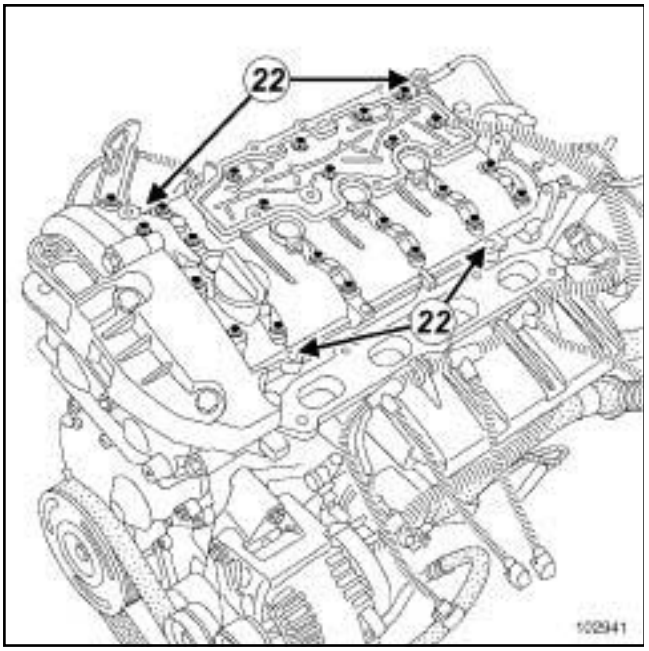

102941

❑ Remove the rocker cover bolts.

❑ Remove the rocker cover vertically by tapping the lugs (**22**) with a copper hammer.

❑ Remove the camshaft seals.

F4R, and 770 or 771 or 776

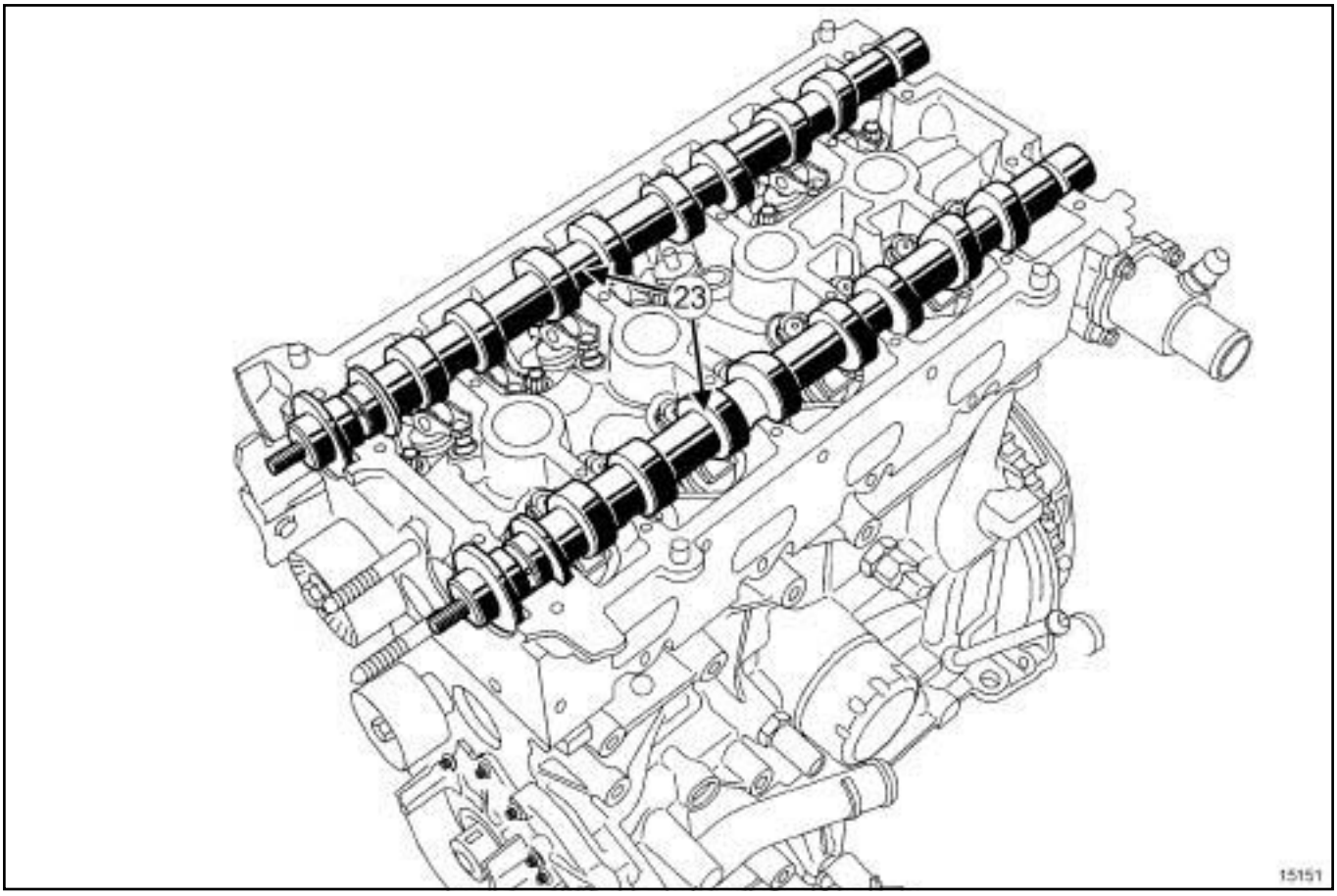

15151

❑ Remove the inlet and exhaust camshafts (**23**)

F4R, and 770 or 771 or 776

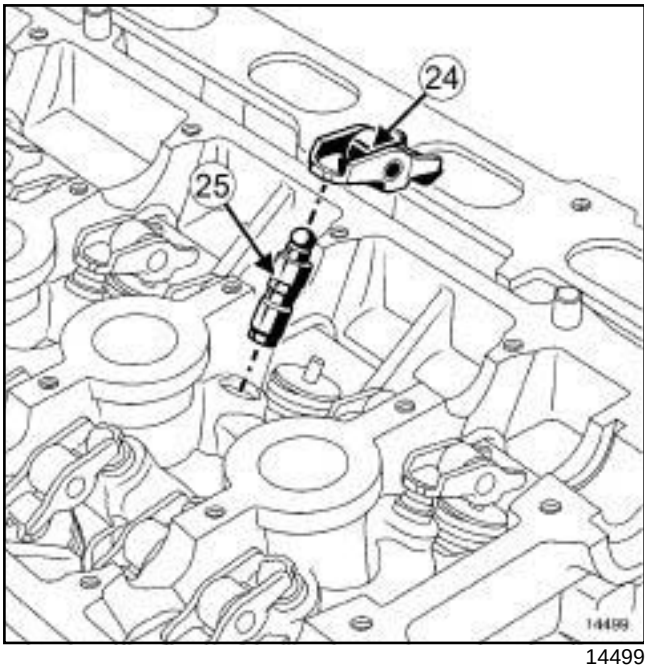

14499

❑ Remove:

- the valve rockers (**24**) ,
- the hydraulic tappets (**25**) .

Note:

To prevent any risk of unpriming the hydraulic tappets, make sure that they are vertical.

F4R, and 770 or 771 or 776

II - OPERATION FOR REMOVAL OF PART CONCERNED

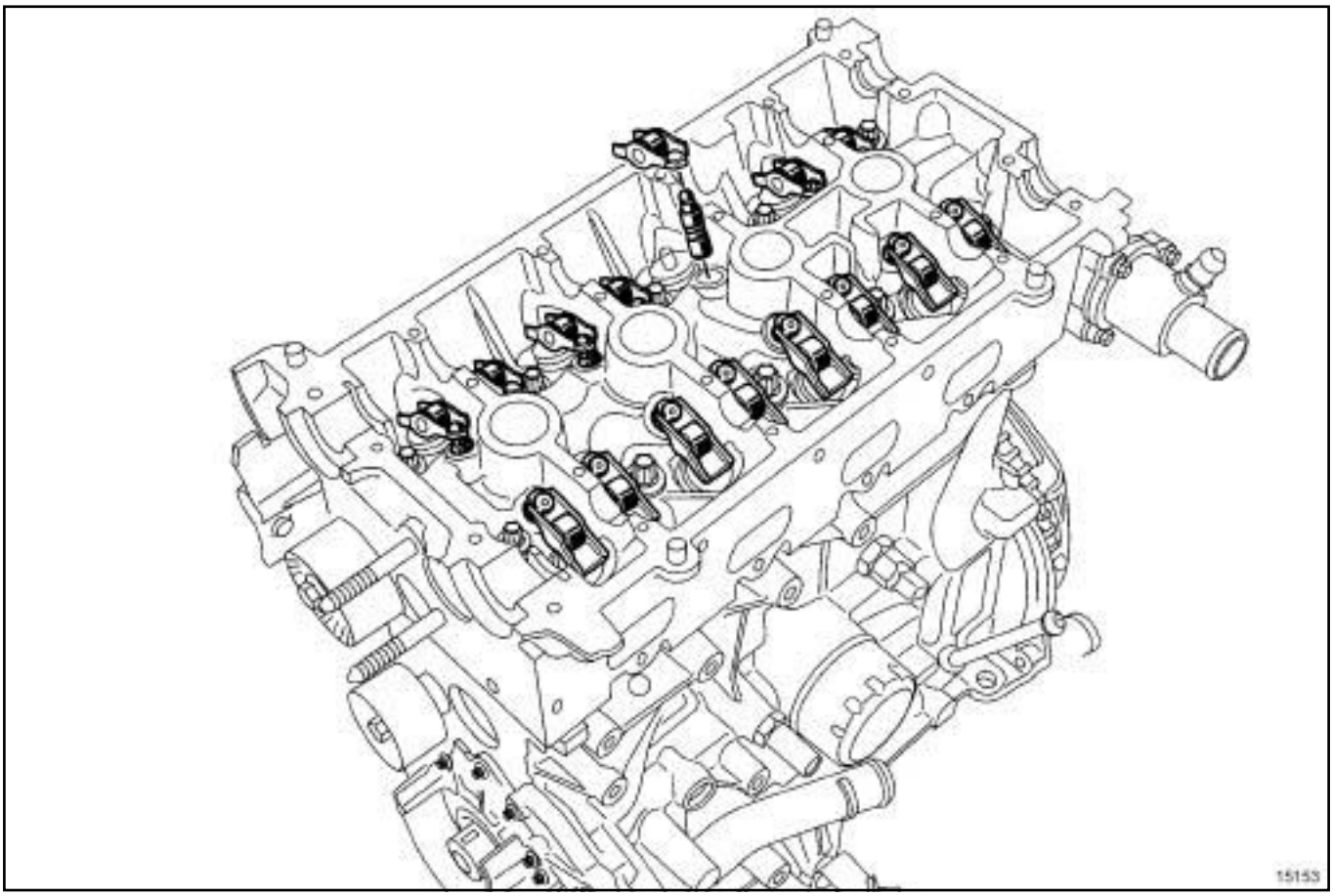

15153

- ❑ Remove the cylinder head bolts.
- ❑ Recover the stem caps for the bolts on the cylinder head.
- ❑ Remove:
  - the cylinder head using a **workshop hoist** and a **load balancer**.
  - the cylinder head gasket.

F4R, and 770 or 771 or 776

REFITTING

I - REFITTING PREPARATION OPERATION

❑

IMPORTANT
Wear goggles with side protectors for this operation.

IMPORTANT
Wear leaktight gloves (Nitrile type) for this operation.

WARNING
Do not scrape the joint faces of the aluminium, any damage caused to the joint face will result in a risk of leaks.

WARNING
Do not allow this product to drip onto the paintwork.

Clean the cylinder head carefully to avoid any foreign bodies entering the oil return and supply pipes.

Failure to follow this advice could lead to the blocking of the various oil inlet galleries, which would quickly result in engine damage.

WARNING
To ensure proper sealing, the gasket surfaces must be clean, dry and not greasy (avoid any finger marks).

❑ **parts always to be replaced: cylinder head bolts (10,02,01,14)**.

❑ **parts always to be replaced: Cylinder head gasket (10,02,01,04)**.

1 - Cleaning the cylinder head joint face

❑

WARNING
Protect the oilway so that foreign bodies do not enter the oil pipes in the cylinder head.

Failure to follow this instruction could lead to the blocking of the oilways, resulting in a rapid deterioration of the camshaft.

❑ Clean the joint face using **GREY ABRASIVE PADS** (see **Vehicle: Parts and ingredients for the repairwork**) (04B, Consumables - Products):

- the cylinder head,

- of the cylinder block.

❑ Use a **SURFACE CLEANER** (see **Vehicle: Parts and ingredients for the repairwork**) (04B, Consumables - Products) and **CLEAN CLOTHS** to degrease the joint faces:

- of the cylinder head,

- of the cylinder block.

2 - Checking the gasket face

❑ Check with a **cylinder head rule** and a **set of feeler gauges** to determine if the joint face has been deformed.

WARNING
No regrinding of the cylinder head is permitted.

❑ The maximum deformation is **0.05 mm.**

Note:

If the cylinder head is faulty:

-strip the cylinder head (see **Cylinder head:Stripping - Restoring**) (Technical Note 6027A, 10A, Engine and cylinder block assembly),

-test the cylinder head for any cracks using the **cylinder head testing tool** (see **Cylinder head testing equipment: Use**) (Technical Note 6026A, 11A, Top and front of engine),

-rebuild the cylinder head (see **Cylinder head:Stripping - Restoring**) (Technical Note 6027A, 10A, Engine and cylinder block assembly).

II - REFITTING OPERATION FOR PART CONCERNED

❑ Using a syringe, extract any oil which may have entered the cylinder head holes.

F4R, and 770 or 771 or 776

❏ Refit:

- a new cylinder head gasket,
- the cylinder head using a **workshop hoist** and a **load balancer**.

Note:

During this operation, be careful not to damage the windscreen.

WARNING

To ensure proper sealing, the gasket surfaces must be clean, dry and not greasy (avoid any finger marks).

❏ Refit the stem caps for the bolts on the cylinder head.

WARNING

In order to ensure that the bolts are correctly tightened, use a syringe to remove any oil which may be in the cylinder head mounting holes.

WARNING

Do not oil the new bolts. Be sure to oil bolts being reused.

❏ Refit new cylinder head bolts.

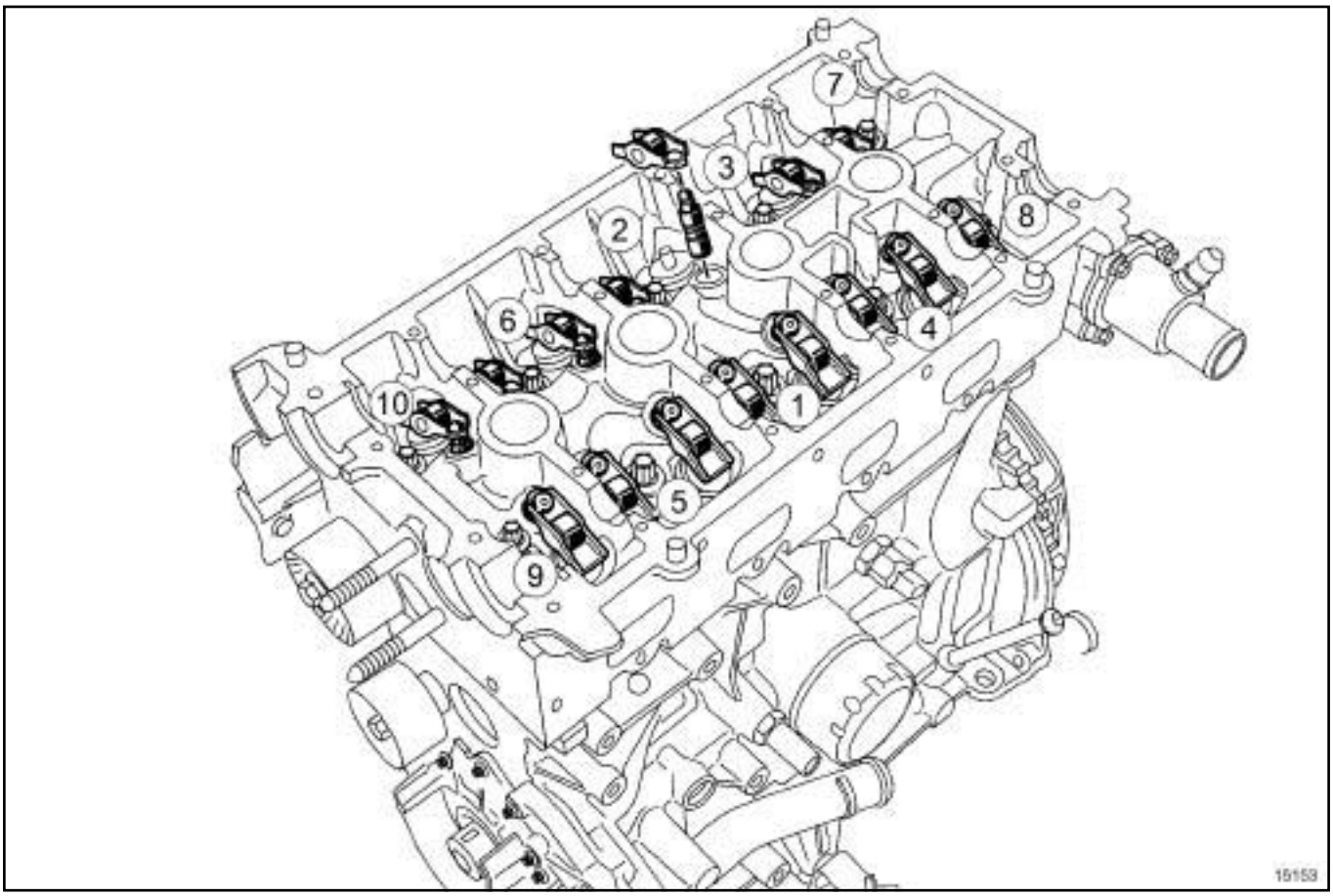

15153

❏ Tighten to torque and in order the **cylinder head bolts (initial torque) (30 N.m)**.

❏ Check that all the cylinder head bolts are correctly torque tightened **30 N.m**.

❏ Angle tighten in order the **cylinder head bolts (230° ± 6°)**.

F4R, and 770 or 771 or 776

III - FINAL OPERATION

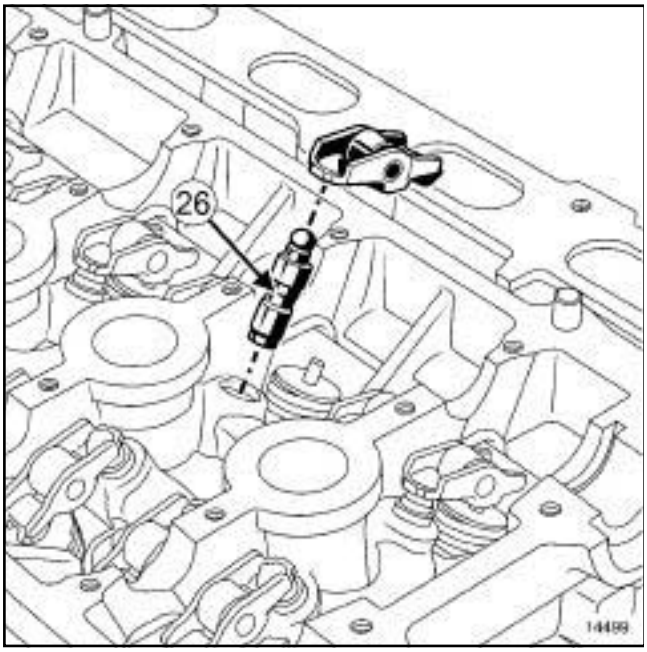

14499

❑ Reprime the hydraulic tappets (hydraulic tappets may empty after a long down time).

To check or reprime a hydraulic tappet, press the top of the tappet at (**26**) with the thumb.

If the tappet piston depresses:

- insert the tappets in a container of diesel fuel or new engine oil,
- refit the hydraulic tappets.

❑ Refit:

- the valve rockers,
- the camshafts, oiling the bearings.

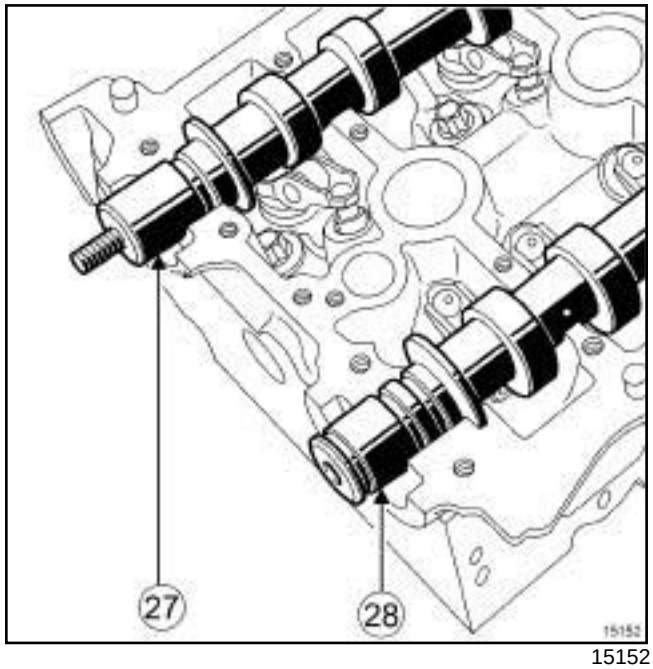

15152

❑ The camshafts are identified by the pulley mountings.

Detailed view of the pulley mountings:

- (**27**) : exhaust camshaft,
- (**28**) : inlet camshaft.

F4R, and 770 or 771 or 776

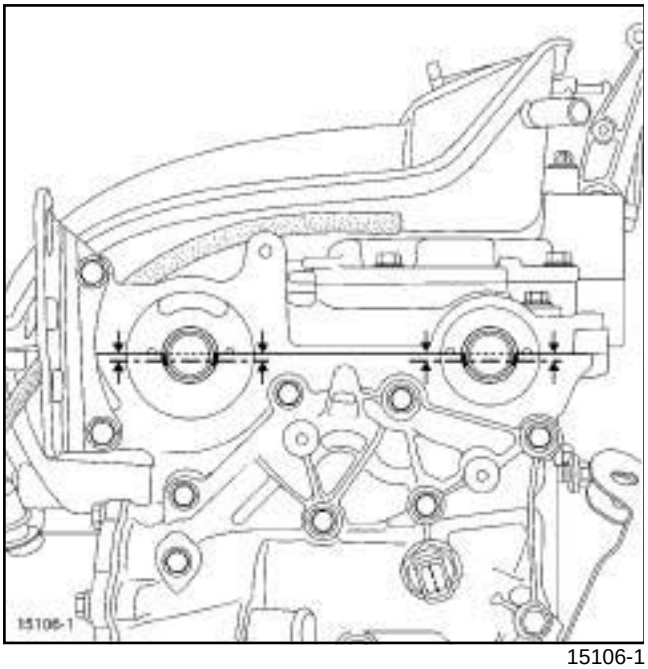

15106-1

❑ Position the camshaft grooves as shown in the diagram.

WARNING

Applying excess sealant could cause it to be squeezed out when parts are tightened. A mixture of sealant and fluid could damage certain components (engine, radiator, etc.).

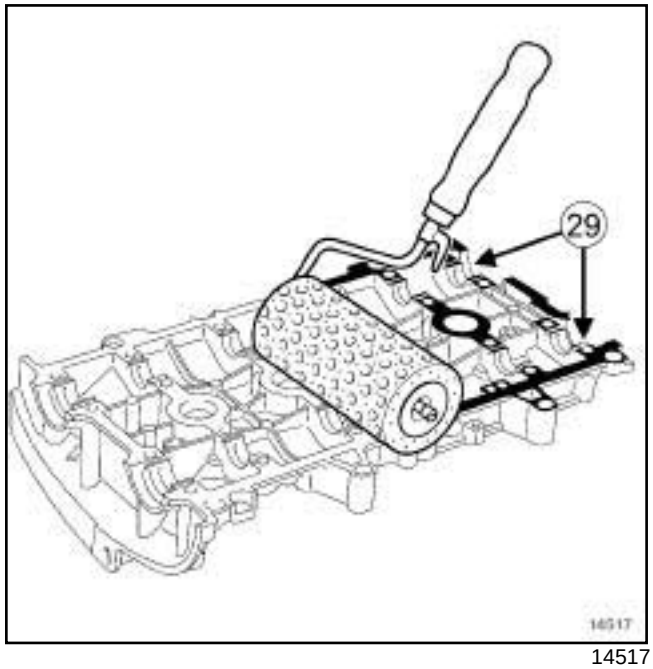

14517

❑ Apply **RESIN ADHESIVE** to the rocker cover joint face using the (stipple) roller (see **Vehicle: Parts and ingredients for the repairwork**) (04B, Consumables - Products).

Note:

Using a cloth, remove the **RESIN ADHESIVE** at (**29**) from the camshaft rocker cover bearings.

❑ Refit the rocker cover (see **11A**, **Top and front of engine**, **Rocker cover: Removal - Refitting**, page **11A-158**) .

F4R, and 770 or 771 or 776

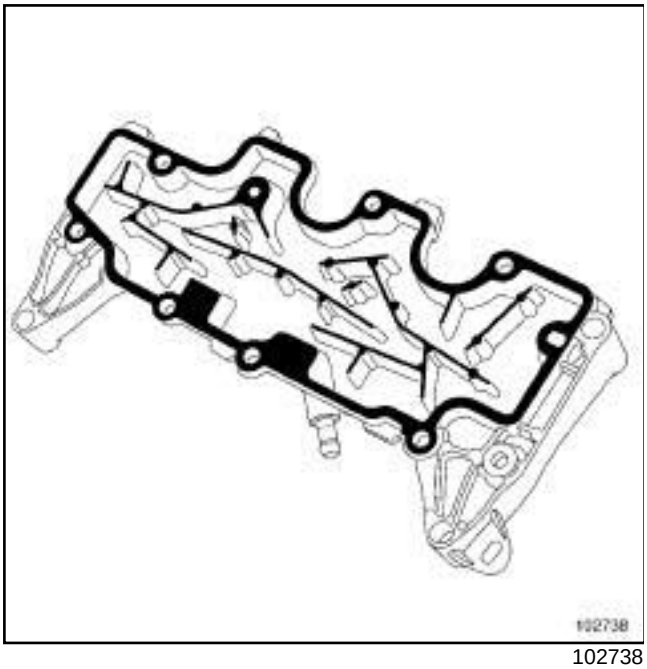

102738

❑

WARNING

To ensure proper sealing, the gasket surfaces must be clean, dry and not greasy (avoid any finger marks).

❑ Apply **RESIN ADHESIVE** to the oil separator joint face using the (stipple) roller (see **Vehicle: Parts and ingredients for the repairwork**) (04B, Consumables - Products).

❑ Refit the lifting bracket on the flywheel end.

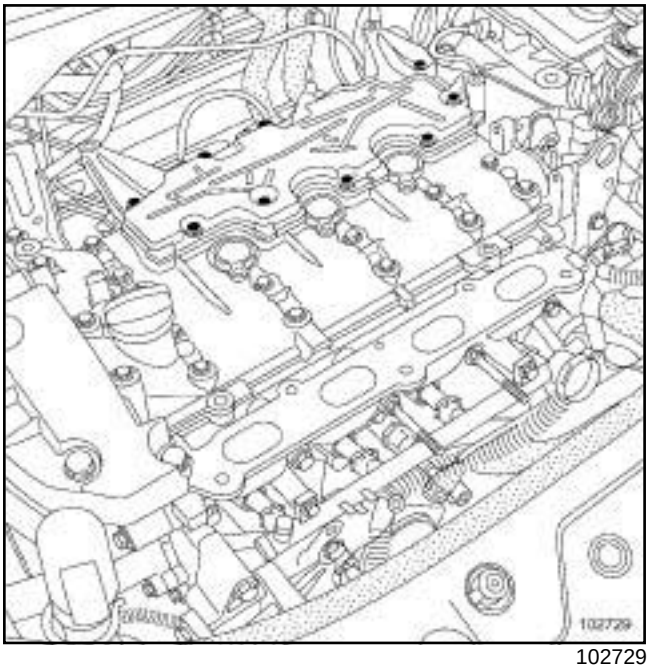

102729

❑ Refit the oil separator.

❑ Tighten to torque and in order:

- the **new or original oil separator bolts (in tapped holes) (10 N.m)**,
- the **new oil separator bolts (in non-tapped holes) (15 N.m)**.

❑ Refit:

- the exhaust pipe,
- the catalytic converter/gearbox strut,
- the spark plugs (see **17A**, **Ignition**, **Spark plugs: Removal - Refitting**, page **17A-3**) ,
- the ignition coils (see **17A**, **Ignition**, **Coils Removal - Refitting**, page **17A-1**) ,
- the inlet distributor with a new seal (see **12A**, **Fuel mixture**, **Inlet manifold: Removal - Refitting**, page **12A-49**) ,
- the camshaft dephaser solenoid valve.

❑ Replace the camshaft seals.

- use the **(Mot. 1517)** for the inlet camshaft seal,
- use the **(Mot. 1512)** for the exhaust camshaft seal.

❑ Refit the electrical wiring clip.

❑ Connect:

- the upstream oxygen sensor connector,
- the injector connectors,
- the fuel vapour recirculation solenoid valve pipe,
- the inlet distributor pressure sensor connector,

F4R, and 770 or 771 or 776

- the camshaft dephaser connector,
- the air temperature sensor connector,
- the ignition coil connectors.
- the brake servo vacuum pipe on the inlet distributor side,
- the water chamber pipes using the tool **(Mot. 1448)**,
- the coolant temperature sensor connector.

❑ Refit:

- the electrical wiring support,
- the exhaust camshaft pulley.
- the blanking cover of the inlet camshaft dephaser,
- the scuttle panel partition,
- the windscreen wiper mechanism (see **Windscreen wiper mechanism: Removal - Refitting**) (85A, Wiping - Washing),
- the front bumper (see **Front bumper: Removal - Refitting**) (55A, Exterior protection),
- the starter (see **16A**, **Starting - Charging**, **Starter: Removal - Refitting**, page **16A-21**) ,
- the catalytic pre-converter (see **19B**, **Exhaust**, **Catalytic pre-converter: Removal - Refitting**, page **19B-29**) ,
- the accessories belt (see **11A**, **Top and front of engine**, **Accessories belt: Removal - Refitting**, page **11A-4**) ,
- the front wheels (see **Wheel: Removal - Refitting**) (35A, Wheels and tyres),
- the air filter access panel,
- the scuttle panel grille (see **Scuttle panel grille: Removal - Refitting**) (55A, Exterior protection),
- the bonnet (see **Bonnet: Removal - Refitting**) (48A, Non-side opening elements),
- the battery tray (see **Battery tray: Removal - Refitting**) (80A, Battery),
- the battery (see **Battery : Removal - Refitting**) (80A, Battery),
- the engine covers.

❑ Fill and bleed the cooling system (see **19A**, **Cooling**, **Cooling circuit: Draining - Refilling**, page **19A-15**) .

❑ Refit the engine undertray.

K9K, and 720 or 728 or 729

REMOVAL

REMOVAL PREPARATION OPERATION

❑ Position the vehicle on a two-post lift (see **Vehicle: Towing and lifting**) (02A, Lifting equipment).

❑ Remove:

- the engine covers,
- the battery (see **Battery : Removal - Refitting**) ,
- the battery tray (see **Battery tray: Removal - Refitting**) ,
- the bonnet (see **Bonnet: Removal - Refitting**) ,
- the scuttle panel grille (see **Scuttle panel grille: Removal - Refitting**) .

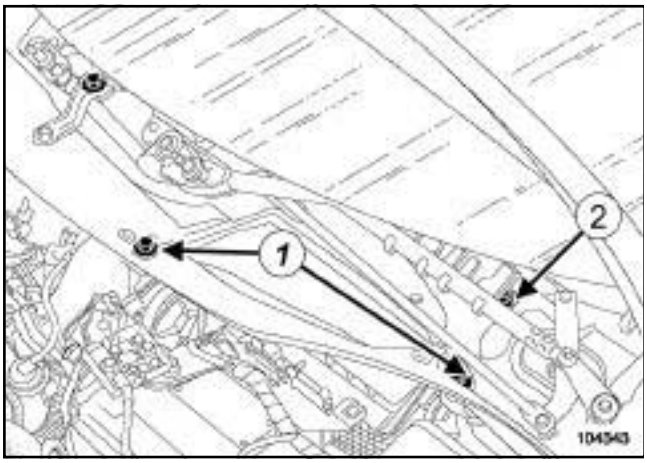

104343

❑ Remove:

- the air filter access panel bolts (**1**) ,
- the air filter access panel,
- the bolt (**2**) from the scuttle panel partition.

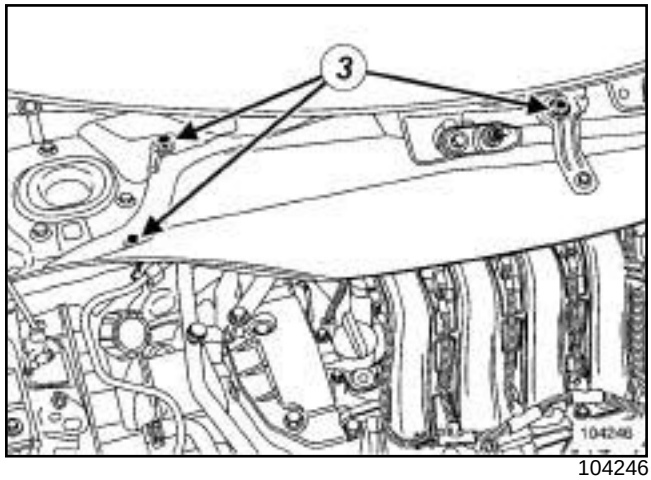

104246

❑ Remove:

- the bolts (**3**) from the scuttle panel partition,
- the scuttle panel partition,
- the windscreen wiper mechanism (see **Windscreen wiper mechanism: Removal - Refitting**) (85A, Wiping - Washing).
- the front bumper (see **Front bumper: Removal - Refitting**) ,
- the engine undertray.

❑ Drain the engine cooling system (see **19A**, **Cooling**, **Cooling circuit: Draining - Refilling**, page **19A-15**) .

❑ Remove:

- the front wheels (see **Wheel: Removal - Refitting**) ,
- the accessories belt (see **11A**, **Top and front of engine**, **Accessories belt: Removal - Refitting**, page **11A-4**) ,
- the timing belt (see **11A**, **Top and front of engine**, **Timing belt: Removal - Refitting**, page **11A-18**) ,
- the catalytic pre-converter (see **19B**, **Exhaust**, **Catalytic pre-converter: Removal - Refitting**, page **19B-29**) ,
- the starter (see **16A**, **Starting - Charging**, **Starter: Removal - Refitting**, page **16A-21**)

F4R, and 774 or 776

Tightening torques ▽	
cylinder head bolts	**30 N.m**
cylinder head bolts	**180° ± 25°**

REMOVAL

I - REMOVAL PREPARATION OPERATION

❑ Remove:

- the « engine and gearbox » assembly (see **10A**, **Engine and cylinder block assembly**, **Engine/ gearbox assembly: Removal - Refitting**, page **10A-97**) ,
- the accessories belt (see **11A**, **Top and front of engine**, **Accessories belt: Removal - Refitting**, page **11A-4**) ,
- the timing belt (see **11A**, **Top and front of engine**, **Timing belt: Removal - Refitting**, page **11A-18**) ,
- the coils (see **17A**, **Ignition**, **Coils Removal - Refitting**, page **17A-1**) ,
- the oil separator (see **11A**, **Top and front of engine**, **Oil decanter: Removal - Refitting**, page **11A-301**) ,
- the rocker cover (see **11A**, **Top and front of engine**, **Rocker cover: Removal - Refitting**, page **11A-158**) ,
- the camshafts (see **11A**, **Top and front of engine**, **Camshaft: Removal - Refitting**, page **11A-172**) .

F4R, and 774

❑ Remove the catalytic converter (see **19B**, **Exhaust**, **Catalytic converter: Removal - Refitting**, page **19B-46**) .

F4R, and 776

❑ Remove the catalytic pre-converter (see **19B**, **Exhaust**, **Catalytic converter: Removal - Refitting**, page **19B-46**) .

❑ Remove:

- the turbocharger (see **12B**, **Turbocharging**, **Turbocharger: Removal - Refitting**, page **12B-4**) ,
- the exhaust manifold (see **12A**, **Fuel mixture**, **Exhaust manifold: Removal - Refitting**, page **12A-73**) ,
- the inlet distributor (see **12A**, **Fuel mixture**, **Inlet manifold: Removal - Refitting**, page **12A-49**) ,
- the water chamber (see **19A**, **Cooling**, **Plenum chamber: Removal - Refitting**, page **19A-45**) .

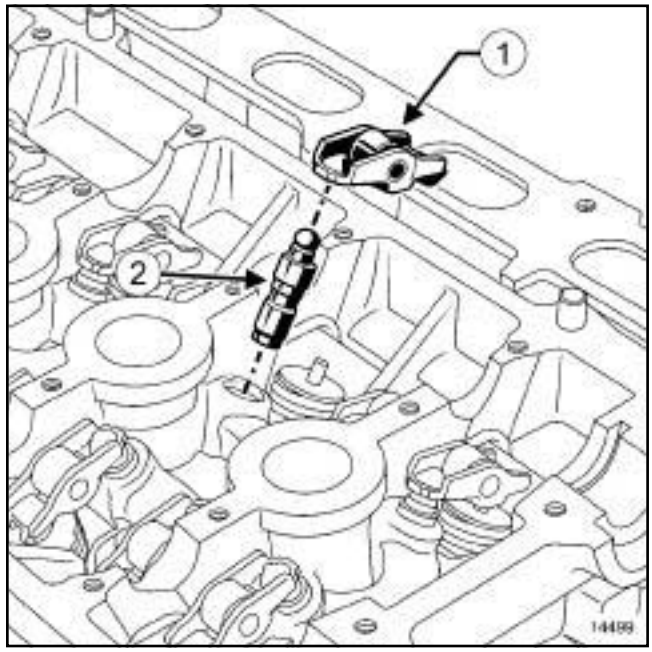

14499

❑

> Note:
>
> To prevent any risk of unpriming the hydraulic tappets, always make sure that they are vertical.

❑ Remove:

- the valve rockers (**1**) ,
- the hydraulic tappets (**2**) .

F4R, and 774 or 776

II - OPERATION FOR REMOVAL OF PART CONCERNED

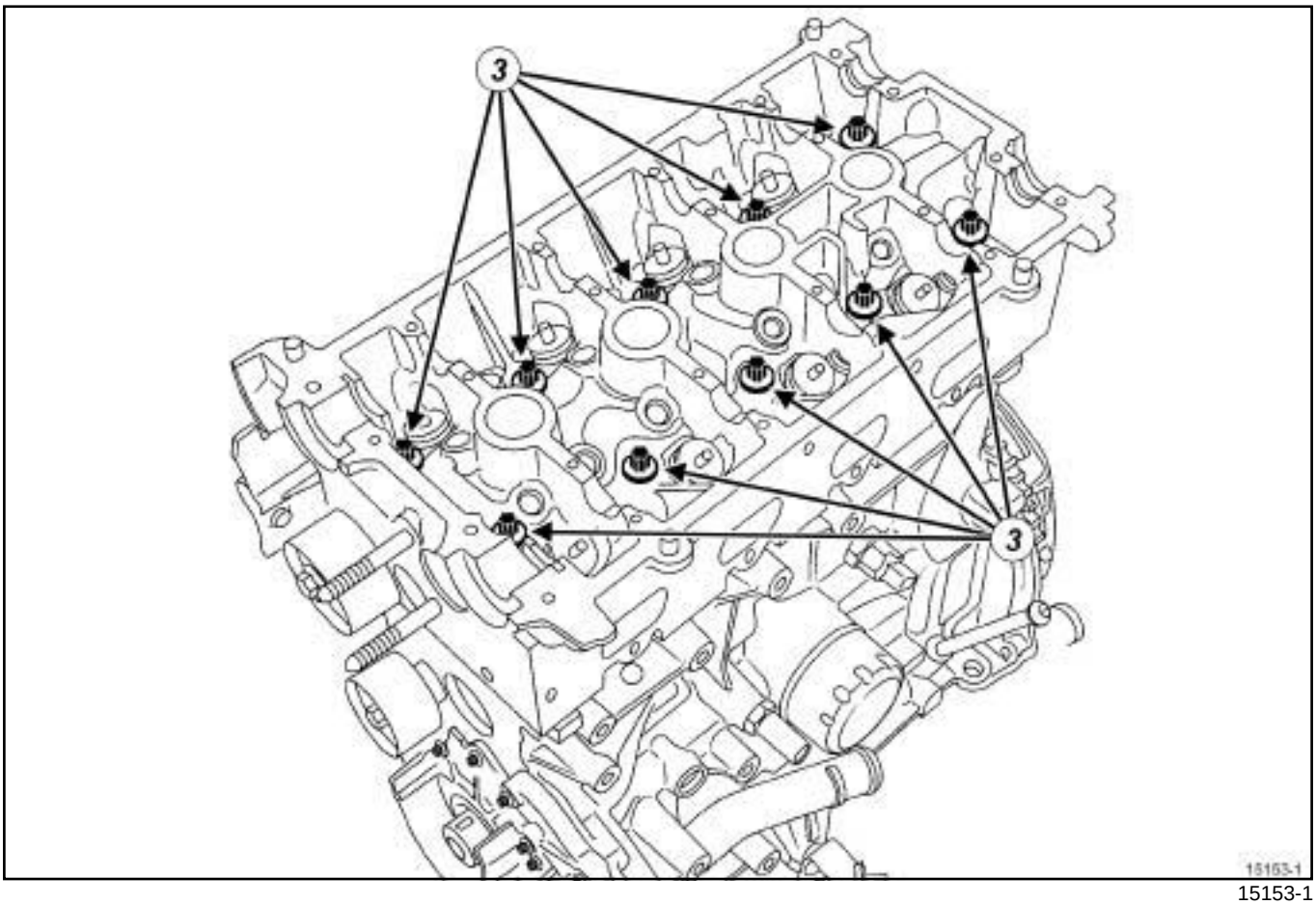

15153-1

❑ Remove:

- the cylinder head bolts (**3**) ,
- the cylinder head,
- the cylinder head gasket.

REFITTING

I - REFITTING PREPARATION OPERATION

❑ **parts always to be replaced: Cylinder head gasket (10,02,01,04)**.

❑ **parts always to be replaced: cylinder head bolts (10,02,01,14)**.

F4R, and 774 or 776

1 - Cleaning the cylinder head joint face

❑

IMPORTANT
Wear goggles with side protectors for this operation.

IMPORTANT
Wear leaktight gloves (Nitrile type) for this operation.

WARNING
Do not scrape the joint faces of the aluminium, any damage caused to the joint face will result in a risk of leaks.

WARNING
Do not allow this product to drip onto the paintwork.

Clean the cylinder head carefully to avoid any foreign bodies entering the oil return and supply pipes.

Failure to follow this advice could lead to the blocking of the various oil inlet galleries, which would quickly result in engine damage.

WARNING
To ensure proper sealing, the gasket surfaces must be clean, dry and not greasy (avoid any finger marks).

WARNING
Protect the oilway so that foreign bodies do not enter the oil pipes in the cylinder head.

Failure to follow this instruction could lead to the blocking of the oilways, resulting in a rapid deterioration of the camshaft.

❑ Clean the joint faces with **SUPER CLEANING AGENT FOR JOINT FACES** (see **Vehicle: Parts and ingredients for the repairwork**) (04B, Consumables - Products):

- the cylinder head gasket face if being reused,

- the cylinder block gasket face.

❑ Use **SURFACE CLEANER** (see **Vehicle: Parts and ingredients for the repairwork**) (04B, Consumables - Products) to degrease:

- the cylinder head gasket face if being reused,

- the cylinder block gasket face.

2 - Checking the gasket face

❑ Check for gasket face deformation using a ruler and a set of shims.

WARNING
No regrinding of the cylinder head is permitted.

❑ The maximum deformation is **0.05 mm**.

Note:

If the cylinder head is faulty:

-strip the cylinder head (see **Stripping the cylinder head**) (Technical Note 6027A, 10A, Engine and cylinder block assembly),

-test the cylinder head in order to detect any possible cracks using the cylinder head test kit (see **Cylinder head testing equipment: Use**) (Technical Note 6026A, 11A, Top and front of engine),

-rebuild the cylinder head (see **Rebuilding the cylinder head**) (Technical Note 6027A, 10A, Engine and cylinder block assembly).

II - REFITTING OPERATION FOR PART CONCERNED

❑ Bring the pistons to mid-stroke position to prevent any risk of contact with the valves when tightening the cylinder head.

WARNING
To ensure proper sealing, the gasket surfaces must be clean, dry and not greasy (avoid any finger marks).

WARNING
In order to ensure that the bolts are correctly tightened, use a syringe to remove any oil which may be in the cylinder head mounting holes.

WARNING
Do not oil the new bolts. Be sure to oil bolts being reused.

F4R, and 774 or 776

- ❑ Check that the centring devices are present and in good condition on the cylinder block.
- ❑ Fit:
  - a new cylinder head gasket,
  - the cylinder head equipped with new bolts on the cylinder block.

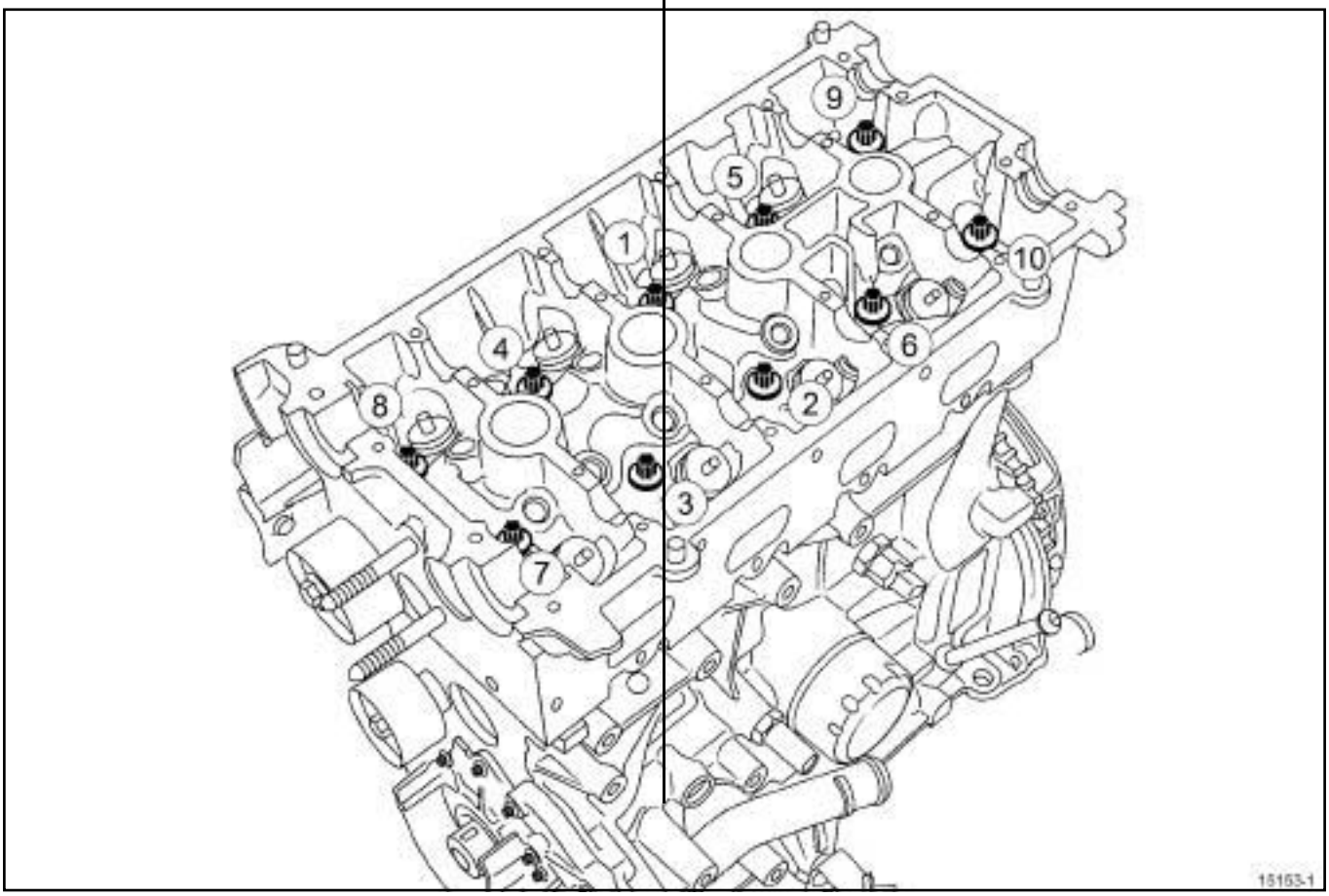

15153-1

- ❑ Fit the new cylinder head bolts in order without tightening.
- ❑ Pretighten in order and to torque the **cylinder head bolts (30 N.m)**.
- ❑ Check that all new cylinder head bolts are correctly tightened to a torque of **30 N.m**.
- ❑ Angle tighten in order the **cylinder head bolts (180° ± 25°)**.

> Note:
>
> Do not retighten the cylinder head bolts after applying this procedure.

F4R, and 774 or 776

III - FINAL OPERATION

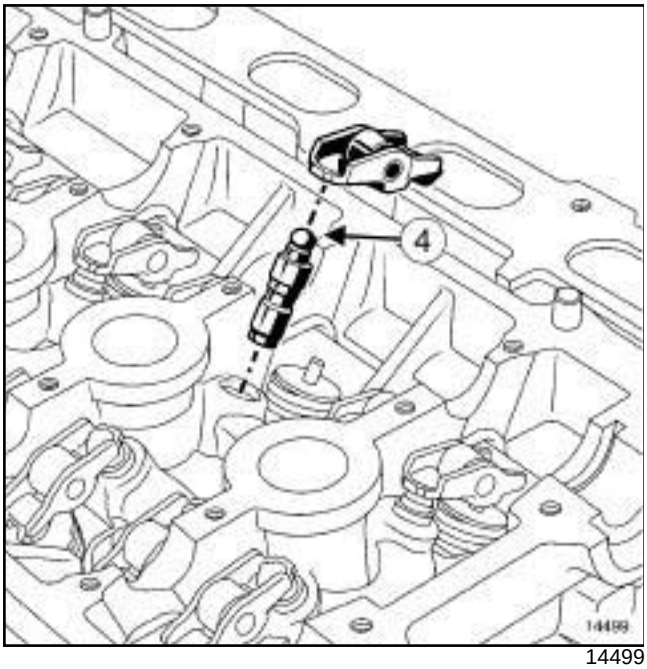

14499

❑

Note:

Because this engine is equipped with hydraulic tappets, there is no valve clearance adjustment.

❑ Reprime the hydraulic tappets (hydraulic tappets may empty if they have been removed for some time).

❑ To check if repriming is necessary, press the top of the tappet (**4**) with your thumb.

❑ If the tappet piston sinks, dip the tappet in a container filled with diesel.

❑ Press on the top of the tappet to expel air bubbles.

❑ Refit:

- the hydraulic tappets,
- the valve rockers.
- the water chamber (see **19A**, **Cooling**, **Plenum chamber: Removal - Refitting**, page **19A-45**) ,
- the inlet distributor (see **12A**, **Fuel mixture**, **Inlet manifold: Removal - Refitting**, page **12A-49**) ,
- the exhaust manifold (see **12A**, **Fuel mixture**, **Exhaust manifold: Removal - Refitting**, page **12A-73**) ,
- the turbocharger (see **12B**, **Turbocharging**, **Turbocharger: Removal - Refitting**, page **12B-4**) .

F4R, and 776

❑ Refit the catalytic pre-converter (see **19B**, **Exhaust**, **Catalytic converter: Removal - Refitting**, page **19B-46**) .

F4R, and 774

❑ Refit the catalytic converter (see **19B**, **Exhaust**, **Catalytic converter: Removal - Refitting**, page **19B-46**) .

❑ Refit:

- the camshafts (see **11A**, **Top and front of engine**, **Camshaft: Removal - Refitting**, page **11A-172**) ,
- the rocker cover (see **11A**, **Top and front of engine**, **Rocker cover: Removal - Refitting**, page **11A-158**) ,
- the oil separator (see **11A**, **Top and front of engine**, **Oil decanter: Removal - Refitting**, page **11A-301**) ,
- the coils (see **17A**, **Ignition**, **Coils Removal - Refitting**, page **17A-1**) ,
- the timing belt (see **11A**, **Top and front of engine**, **Timing belt: Removal - Refitting**, page **11A-18**) ,
- the accessories belt (see **11A**, **Top and front of engine**, **Accessories belt: Removal - Refitting**, page **11A-4**) ,
- the « engine and gearbox » assembly (see **10A**, **Engine and cylinder block assembly**, **Engine/ gearbox assembly: Removal - Refitting**, page **10A-97**) .

F4R, and 774 or 776

K4M, and 760 or 761 or 766 or 812 or 813

Essential special tooling	
Mot. 1496	Tool for setting camshaft.

Tightening torques ▽	
inlet camshaft dephaser pulley bolt	**100 Nm**
inlet camshaft dephaser blanking cover	**15 Nm**

REMOVAL

I - REMOVAL PREPARATION OPERATION

❑ Position the vehicle on a two-post lift (see **Vehicle: Towing and lifting**) (MR 364, 02A, Lifting equipment).

❑ Disconnect the battery (see **Battery: Removal - Refitting**) (MR 364, 80A, Battery).

❑ Remove:

- the scuttle panel grille (see **Scuttle panel grille: Removal - Refitting**) (MR 365, 55A, Exterior protection),
- the accessories belt (see **11A**, **Top and front of engine**, **Accessories belt: Removal - Refitting**, page **11A-4**) ,
- the timing belt (see **11A**, **Top and front of engine**, **Timing belt: Removal - Refitting**, page **11A-18**) .

II - REMOVAL OPERATION FOR PART CONCERNED

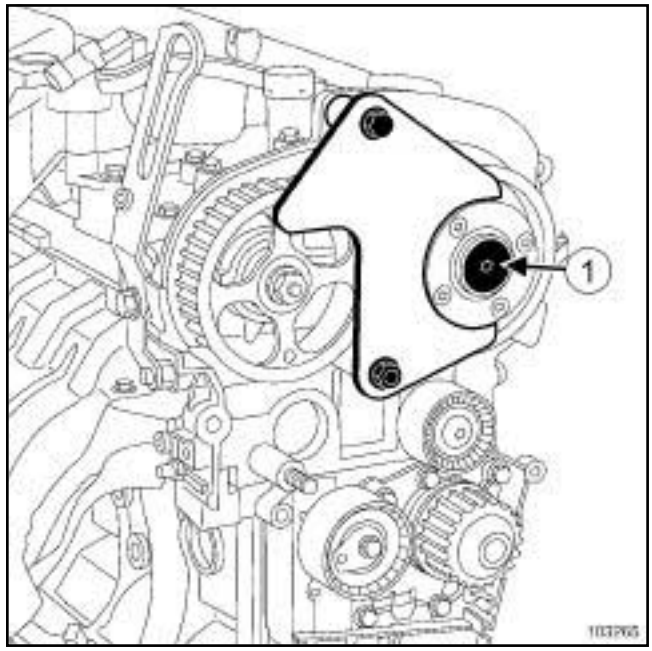

103265

❑ Position the **(Mot. 1496)**.

❑ Remove the inlet camshaft dephaser blanking cover (**1**) .

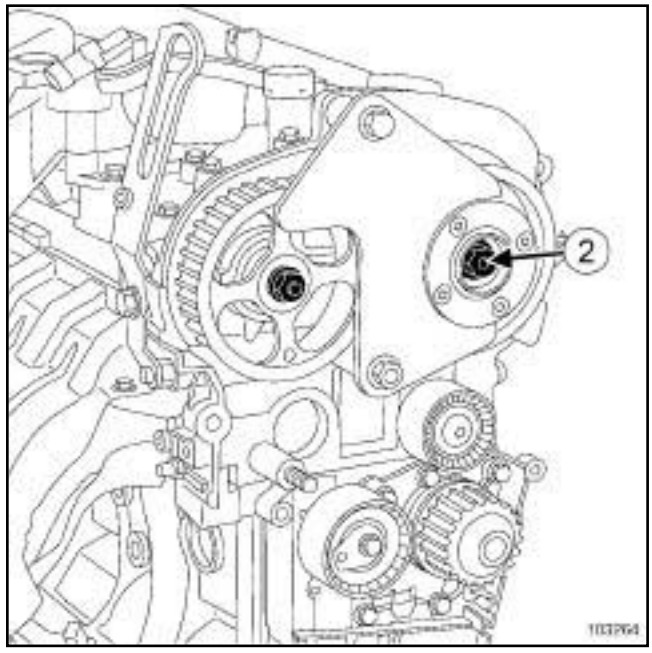

103264

❑ Remove:

- the bolt (**2**) from the inlet camshaft pulley dephaser,
- the **(Mot. 1496)**,
- the inlet camshaft dephaser pulley.

K4M, and 760 or 761 or 766 or 812 or 813

REFITTING

I - REFITTING PREPARATION OPERATION

❑

> **WARNING**
> Failure to observe the following procedure can lead to the destruction of the engine.

❑ If fitting a new inlet camshaft dephaser, check that it is locked by following the procedure described below:

❑ Fit a bolt to the inlet camshaft dephaser hub and tighten it.

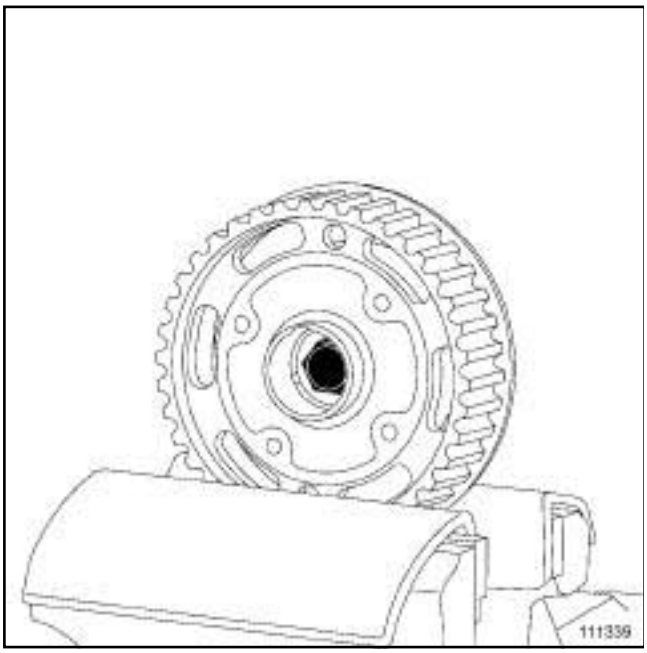

111339

❑ Place the inlet camshaft dephaser in a vice fitted with jaws.

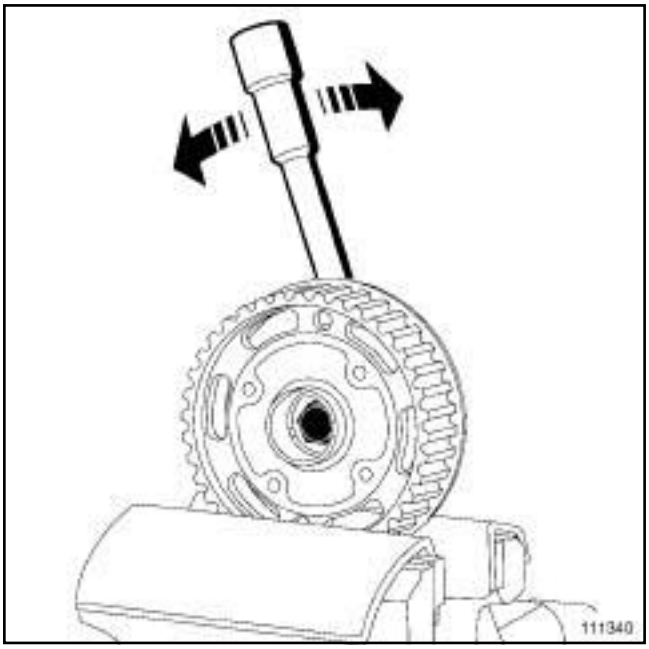

111340

❑ Mechanically lock the dephaser by rotating it to the left or to the right using a tubular hexagon box spanner.

❑ Check that the inlet camshaft dephaser is correctly locked (no rotation of the hub in relation to the wheel to the left or right).

❑ If there is a rotation of the hub in relation to the wheel, the camshaft dephaser is faulty and must be replaced.

❑ Grease the end of the inlet camshaft (timing end) and clean the bores and bearing faces of the inlet camshaft dephaser.

II - REFITTING OPERATION FOR PART CONCERNED

❑ Position the **(Mot. 1496)**.

❑ Refit the inlet camshaft dephaser pulley bolt.

❑ Tighten to torque the **inlet camshaft dephaser pulley bolt (100 Nm)**.

❑ Refit the new inlet camshaft dephaser blanking cover.

❑ Tighten to torque the **inlet camshaft dephaser blanking cover (15 Nm)**.

❑ Remove the **(Mot. 1496)**.

III - FINAL OPERATION.

❑ Refit:

- the timing belt (see **11A**, **Top and front of engine**, **Timing belt: Removal - Refitting**, page **11A-18**) ,

K4M, and 760 or 761 or 766 or 812 or 813

- the accessories belt (see **11A**, **Top and front of engine**, **Accessories belt: Removal - Refitting**, page **11A-4**) ,
- the scuttle panel grille (see **Scuttle panel grille: Removal - Refitting**) (MR 365, 55A, Exterior protection).

❑ Connect the battery (see **Battery : Removal - Refitting**) (MR 364, 80A, Battery).

B84 or C84 or E84 or K84 or L84, and M9R

REMOVAL

I - REMOVAL PREPARATION OPERATION

❑ Disconnect the battery (see **Battery: Removal - Refitting**) (MR 364, 80A, Battery).

❑ Remove:

- the engine cover,
- the injector rail protector (see **13B**, **Diesel injection**, **Injector rail protector: Removal - Refitting**, page **13B-154**) .

II - REMOVAL OPERATION FOR PART CONCERNED

M9R, and 722 or 724

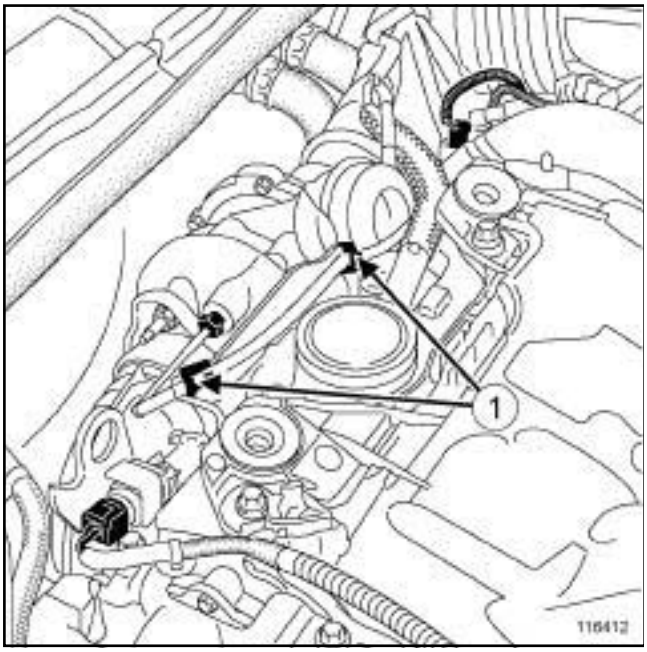

116412

❑ Detach the wiring from the exhaust gas temperature sensor at (**1**) .

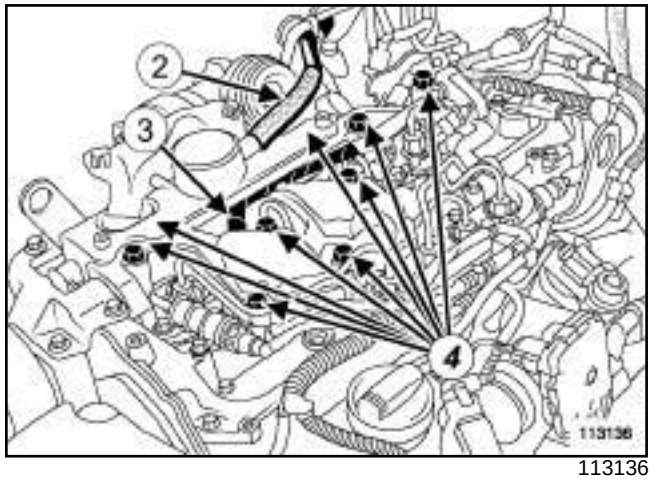

113136

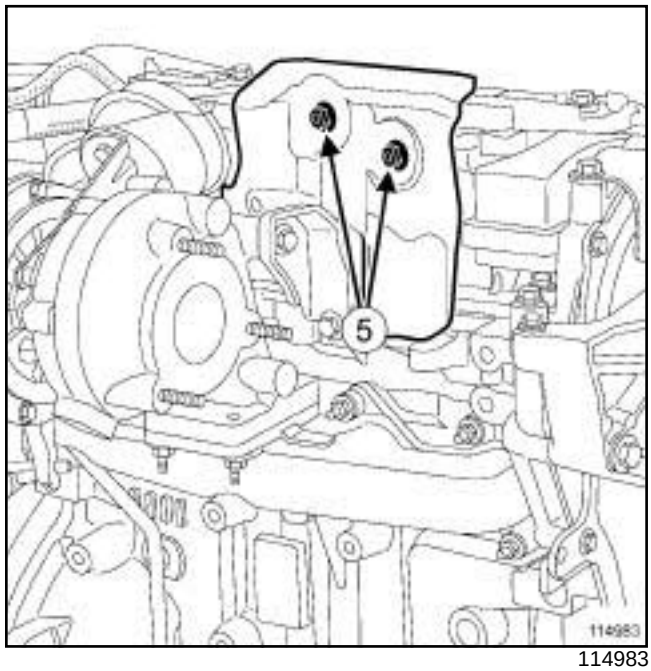

114983

❑ Disconnect:

- the oil vapour rebreathing pipe (**2**) from the oil decanter,
- the connector (**3**) from the injector, timing end.

❑ Unclip the injector harness from the oil separator.

❑ Remove:

- the oil decanter bolts (**4**) on the cylinder head,
- the bolts (**5**) from the heat shield on the oil decanter,
- the oil separator.

B84 or C84 or E84 or K84 or L84, and M9R

REFITTING

I - REFITTING PREPARATIONS OPERATION

❑ Remove the oil decanter seals.

❑ Replace the oil decanter seals.

❑ Check the positioning of the seals in their neck.

❑ Visually inspect the ducts before fitting them.

II - REFITTING OPERATION FOR PART CONCERNED

❑ Refit:

- the oil decanter,
- the oil decanter bolts.

❑ Fit the oil decanter bolts on the cylinder head without tightening them.

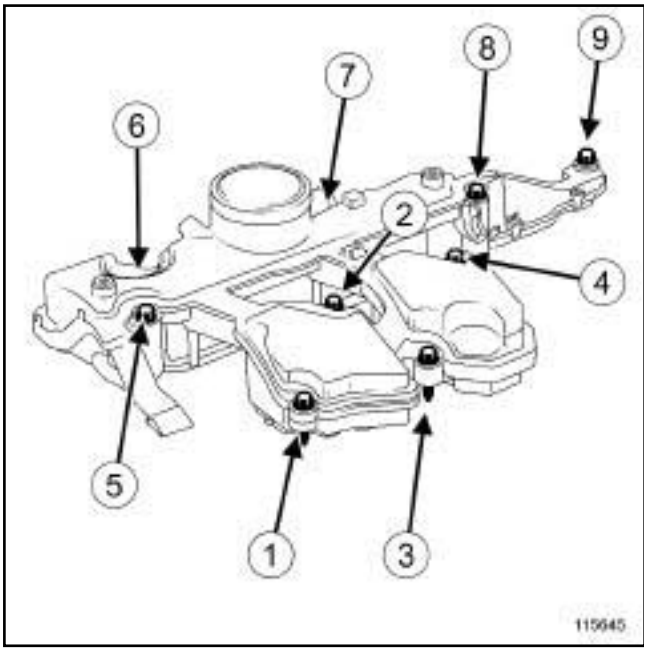

115645

❑ Tighten in order the oil decanter bolts on the cylinder head.

❑ Refit:

- the oil decanter heat shield.
- the oil decanter heat shield bolts.

III - FINAL OPERATION.

❑ Connect the injector connector on the timing end.

❑ Attach the injector wiring harness to the oil decanter.

❑ Connect the oil vapour rebreathing pipe to the oil decanter.

M9R, and 722 or 724

❑ Clip the exhaust gas temperature sensor wiring to the oil decanter heat shield clips.

❑ Refit the injector rail protector (see **13B**, **Diesel injection**, **Injector rail protector: Removal - Refitting**, page **13B-154**) .

❑ Connect the battery (see **Battery: Removal - Refitting**) (MR 364, 80A, Battery).

B84 or C84 or E84 or K84 or L84, and F9Q, and 803 or 804 or 816 or 818

Essential special tooling	
Mot. 1448	Long nose pliers for hose clips.

Tightening torques ▽	
oil decanter bolts	**30 N.m**

REMOVAL

I - REMOVAL PREPARATION OPERATION

❏ Remove the front engine cover.

❏ Remove the air inlet duct.

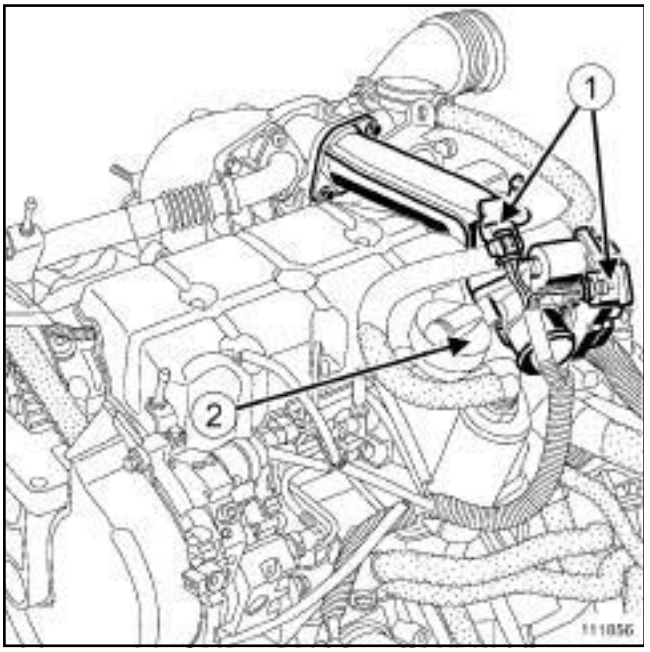

111856

❏ Remove the oil level dipstick (**2**) .

❏ Disconnect the sensors (**1**) .

II - REMOVAL OPERATION FOR PART CONCERNED

❏ Disconnect the oil vapour rebreathing pipe.

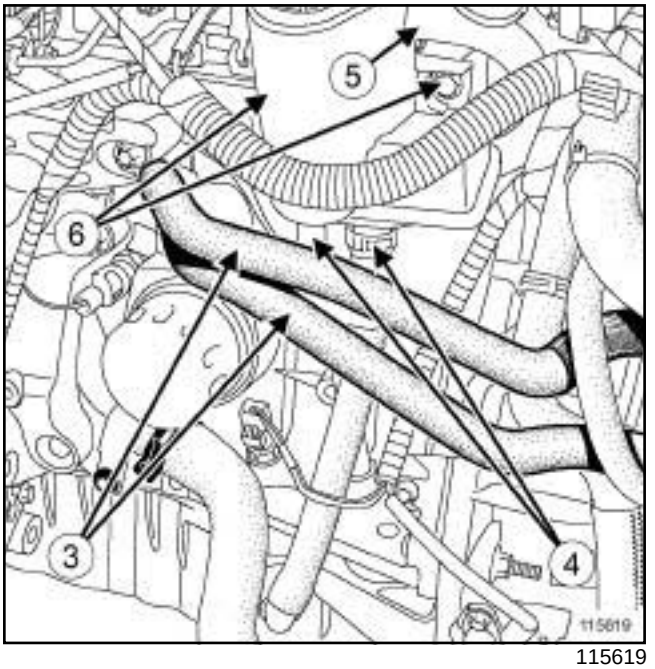

115619

❏ Move the coolant pipes to one side (**3**) .

❏ Disconnect:

- the oil return pipes (**4**) ,
- the pipe (**5**) .

❏ Remove the bolts from the water trap (**6**) .

❏ Move aside the water trap clip on the cylinder block using the **(Mot. 1448)**.

❏ Remove the oil decanter.

REFITTING

I - REFITTING OPERATION FOR PART CONCERNED

❏ Refit:

- the water trap clip on the water trap end piece using the **(Mot. 1448)**.
- the oil decanter, by moving aside the clip using the **(Mot. 1448)**.

❏ Torque tighten the **oil decanter bolts (30 N.m)**.

❏ Connect:

- the pipe ***(5)*** ,
- the oil return pipes ***(4)*** ,
- the oil vapour rebreathing pipe.

❏ Refit the coolant pipes.

B84 or C84 or E84 or K84 or L84, and F9Q, and 803 or 804 or 816 or 818

II - FINAL OPERATION.

❏ Connect the sensors ***(1)*** .

❏ Refit:

- the dipstick,
- the air inlet duct,
- the engine cover.

F4R, and 774 or 776

Tightening torques ▽	
oil separator bolts	**12 N.m**
clip of the intercooler air inlet pipe on the turbocharger	**5.5 N.m**

IMPORTANT
Wear leaktight gloves (Nitrile type) for this operation.

REMOVAL

I - REMOVAL PREPARATION OPERATION

❑ Remove the front engine cover.

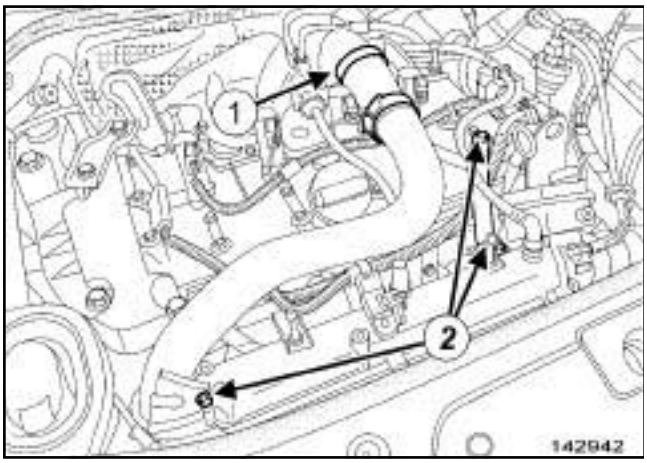

142942

❑ Loosen the clip (**1**) of the intercooler air inlet pipe on the turbocharger.

❑ Remove the bolts (**2**) from the intercooler air inlet pipe.

❑ Disconnect the intercooler air inlet pipe from the turbocharger.

❑ Move aside the intercooler air inlet pipe.

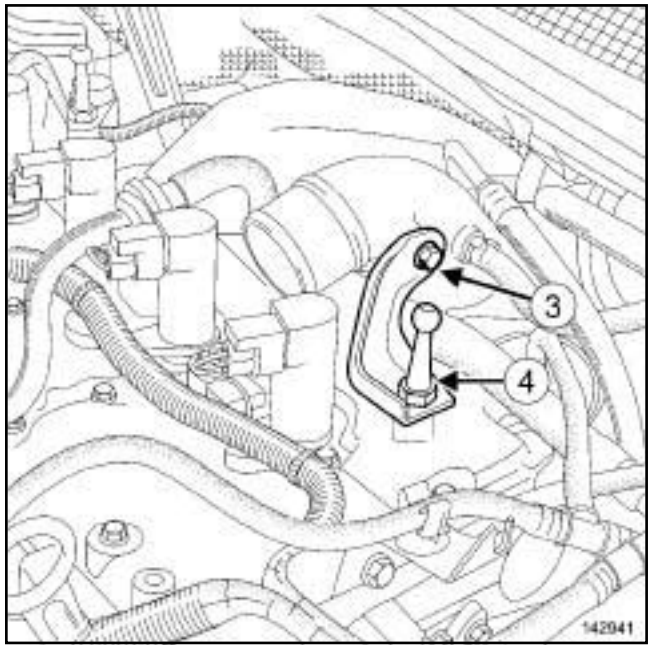

142941

❑ Remove:

- the bolt (**3**) of the turbocharger retaining bracket,
- the positioning pin of the engine cover (**4**) ,
- the turbocharger retaining bracket.

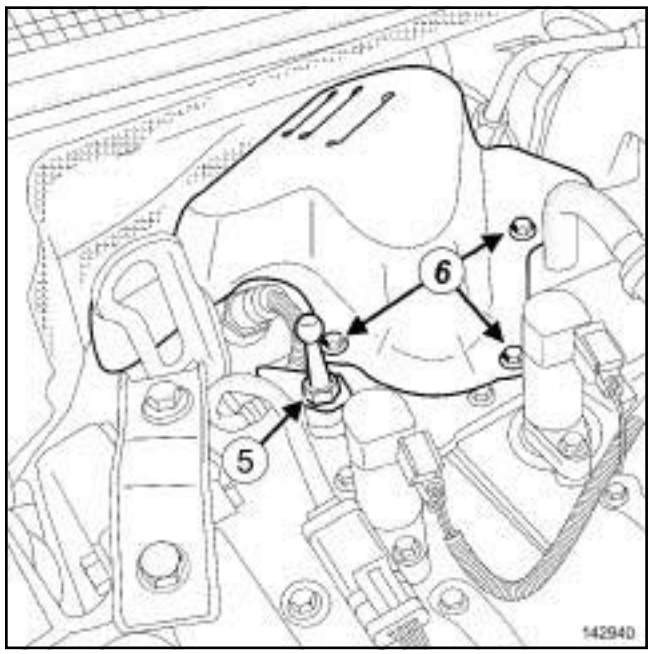

142940

❑ Remove the positioning pin (**5**) from the engine cover.

❑ Unclip the wiring from the upstream oxygen sensor.

❑ Remove:

- the bolts (**6**) from the turbocharger heat shield,
- the turbocharger heat shield.

F4R, and 774 or 776

- The coils (see **17A**, **Ignition**, **Coils Removal - Refitting**, page **17A-1**) of the turbocharger heat shield,

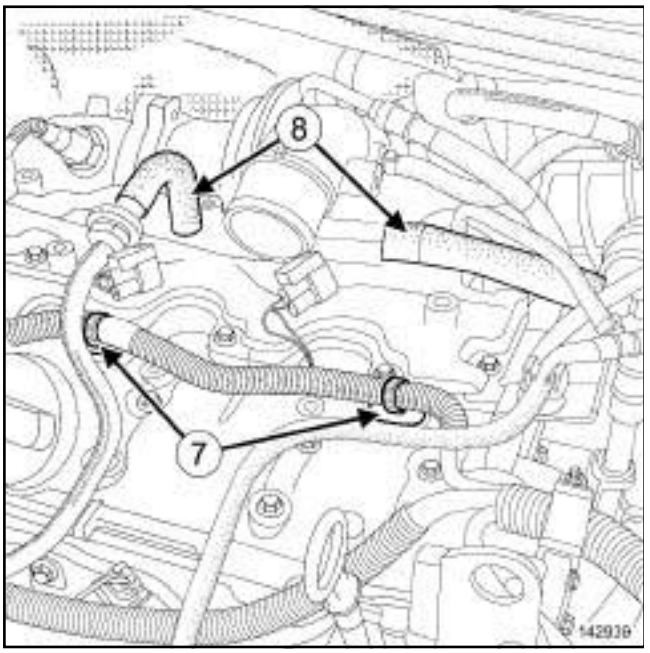

142939

❑ Unclip the coil wiring from the oil decanter at (**7**) .

❑ Disconnect the oil vapour rebreathing pipes (**8**) from the oil decanter.

II - OPERATION FOR REMOVAL OF PART CONCERNED

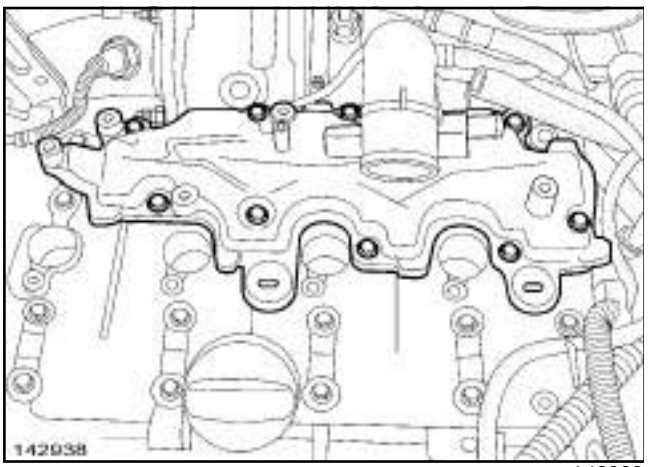

142938

❑ Remove:

- the oil decanter bolts,
- the oil decanter.

REFITTING

I - REFITTING PREPARATION OPERATION

❑ **parts always to be replaced: oil decanter bolt (11,04,06,23)**.

> **WARNING**
> When cleaning parts, it is essential that the parts do not impact on each other, otherwise their mating faces may be damaged and therefore their adjustments may be altered, which could damage the engine.

> **WARNING**
> Do not scrape the joint faces of the aluminium, any damage caused to the joint face will result in a risk of leaks.

❑ Use **SUPER CLEANING AGENT FOR JOINT FACES** (see **Vehicle: Parts and ingredients for the repairwork**) (04B, Consumables - Products) to clean the joint face:

- of the oil decanter in case of reuse,
- of the rocker cover.

❑ Use **SURFACE CLEANER** (see **Vehicle: Parts and ingredients for the repairwork**) (04B, Consumables - Products) to degrease the joint face:

- of the oil decanter in case of reuse,
- of the rocker cover.

> **WARNING**
> To ensure proper sealing, the gasket surfaces must be clean, dry and not greasy (avoid any finger marks).

> **WARNING**
> Applying excess sealant could cause it to be squeezed out when parts are tightened. A mixture of sealant and fluid could damage certain components (engine, radiator, etc.).

❑ Apply **RESIN ADHESIVE** (see **Vehicle: Parts and ingredients for the repairwork**) (04B, Consumables - Products) using a stipple roller on the joint face of the oil separator until the joint face is completely coated.

F4R, and 774 or 776

II - REFITTING OPERATION FOR PART CONCERNED

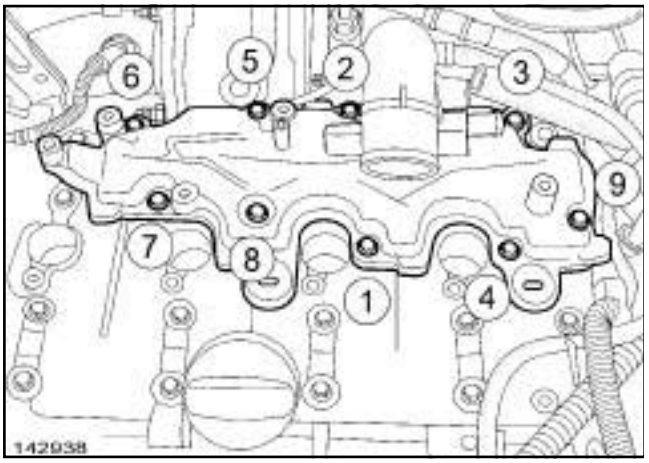

142938

- ❑ Refit:
  - the oil separator,
  - new bolts on the oil separator.
- ❑ Torque tighten in order the **oil separator bolts (12 N.m)**.

III - FINAL OPERATION

- ❑ Connect the oil vapour rebreathing pipes to the oil decanter.
- ❑ Clip the coil wiring onto the oil decanter.
- ❑ Refit:
  - the coils (see **17A**, **Ignition**, **Coils Removal - Refitting**, page **17A-1**) ,
  - the turbocharger heat shield,
  - the turbocharger heat shield bolts.
- ❑ Attach the upstream oxygen sensor wiring.
- ❑ Refit:
  - the turbocharger retaining bracket,
  - the bolt of the turbocharger retaining bracket,
  - the positioning pins of the engine cover.
- ❑ Fit the intercooler air inlet pipe.
- ❑ Connect the intercooler air inlet pipe on the turbocharger.
- ❑ Refit the bolts on the intercooler air inlet pipe.
- ❑ Torque tighten the **clip of the intercooler air inlet pipe on the turbocharger (5.5 N.m)**.
- ❑ Refit the engine cover.

B84 or C84 or G84 or S84, and K4J, and 730 or 732 or 740 – B84 or C84 or G84 or S84, and K4M, and 760 or 761 or 766 or 812 or 813

Engine		Test carried out at idle speed[1]					Fuel[2] (minimum octane rating)
		Pollutant emissions[3]					
Type	**Suffix**	**Idling speed (rpm)**	**CO (%)[4]**	**CO2 (%)**	**HC (ppm)**	**Lambda (λ)**	
K4J	730 / 732 / 740	**750 ± 50**	0.5 maximum	14.5 maximum	100 maximum	0.97<λ<1.03	Super unleaded (octane rating 95)
K4M	760 / 761 / 764 / 766 / 768 / 788 / 812 / 813	**700 ± 40**					

[1]for a coolant temperature above **80˚C** and after a stabilised engine speed of **2500 rpm** for approximately **30 seconds**

[2]compatible with 91 octane unleaded petrol

[3]for the legal values, see specifications by country

[4]at **2000 rpm** the CO should be **0.3 %** maximum

B84 or C84 or G84 or S84, and K4M, and 760 or 761 or 766 or 812 or 813

Diagram of the air inlet circuit

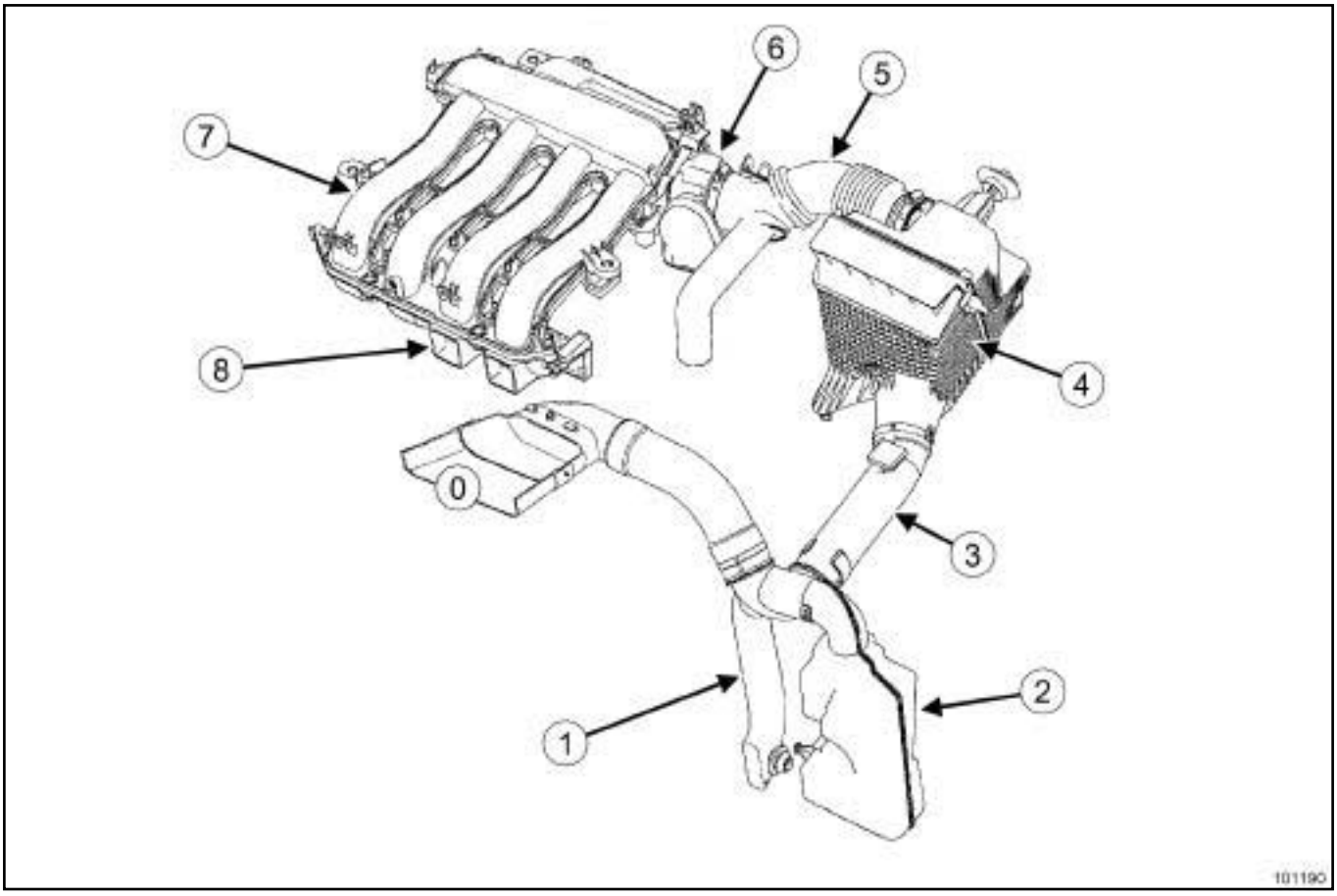

101190

(**0**)	Air inlet scoop
(**1**)	Noise-reducing air pipe
(**2**)	Air resonator
(**3**)	Air filter box air inlet pipe
(**4**)	Air filter box
(**5**)	Air filter box outlet air pipe
(**6**)	Damper valve
(**7**)	Intake distributor
(**8**)	Injector holder shim

B84 or C84 or G84 or S84, and M9R

Diagram of the air inlet circuit

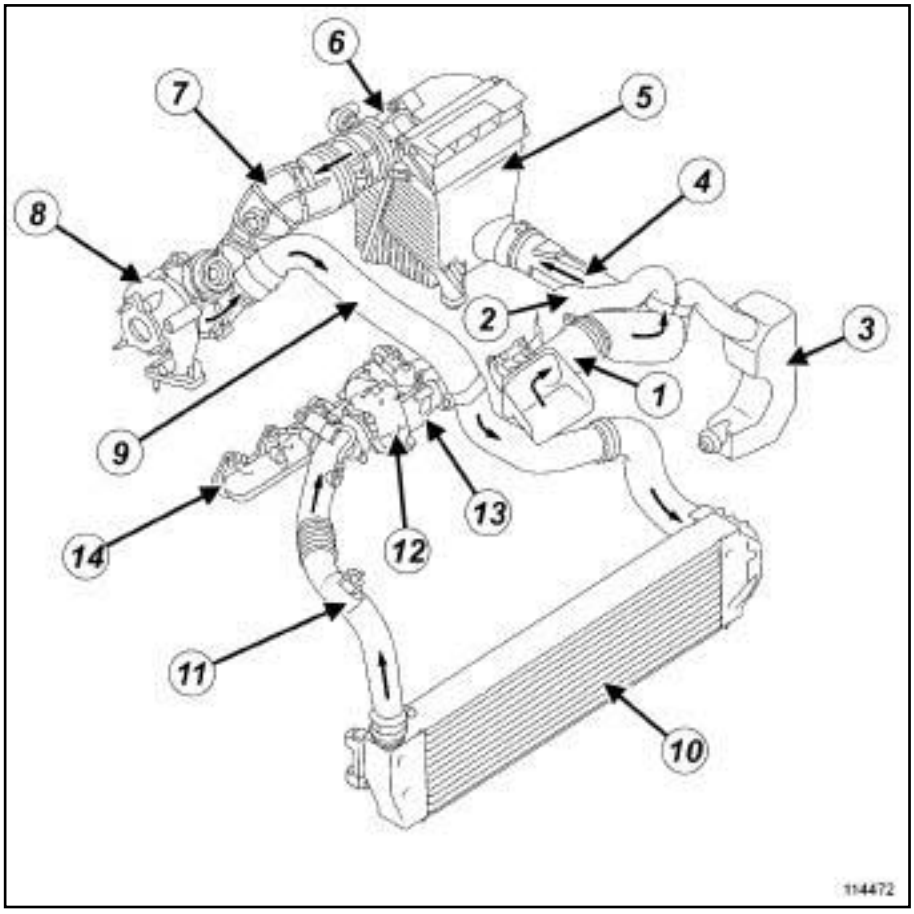

114472

(**1**)	Air inlet scoop
(**2**)	Noise-reducing air pipe
(**3**)	Air resonator (M9R 700 depending on the version)
(**4**)	Air filter box air inlet pipe
(**5**)	Air filter unit
(**6**)	Air flowmeter
(**7**)	Air filter box outlet air pipe
(**8**)	Turbocharger
(**9**)	Intercooler air inlet pipe
(**10**)	Intercooler
(**11**)	Intercooler air outlet pipe
(**12**)	Air inlet valve
(**13**)	EGR solenoid valve
(**14**)	Inlet manifold

B84 or C84 or G84 or S84, and F9Q, and 800

Diagram of the air intake circuit

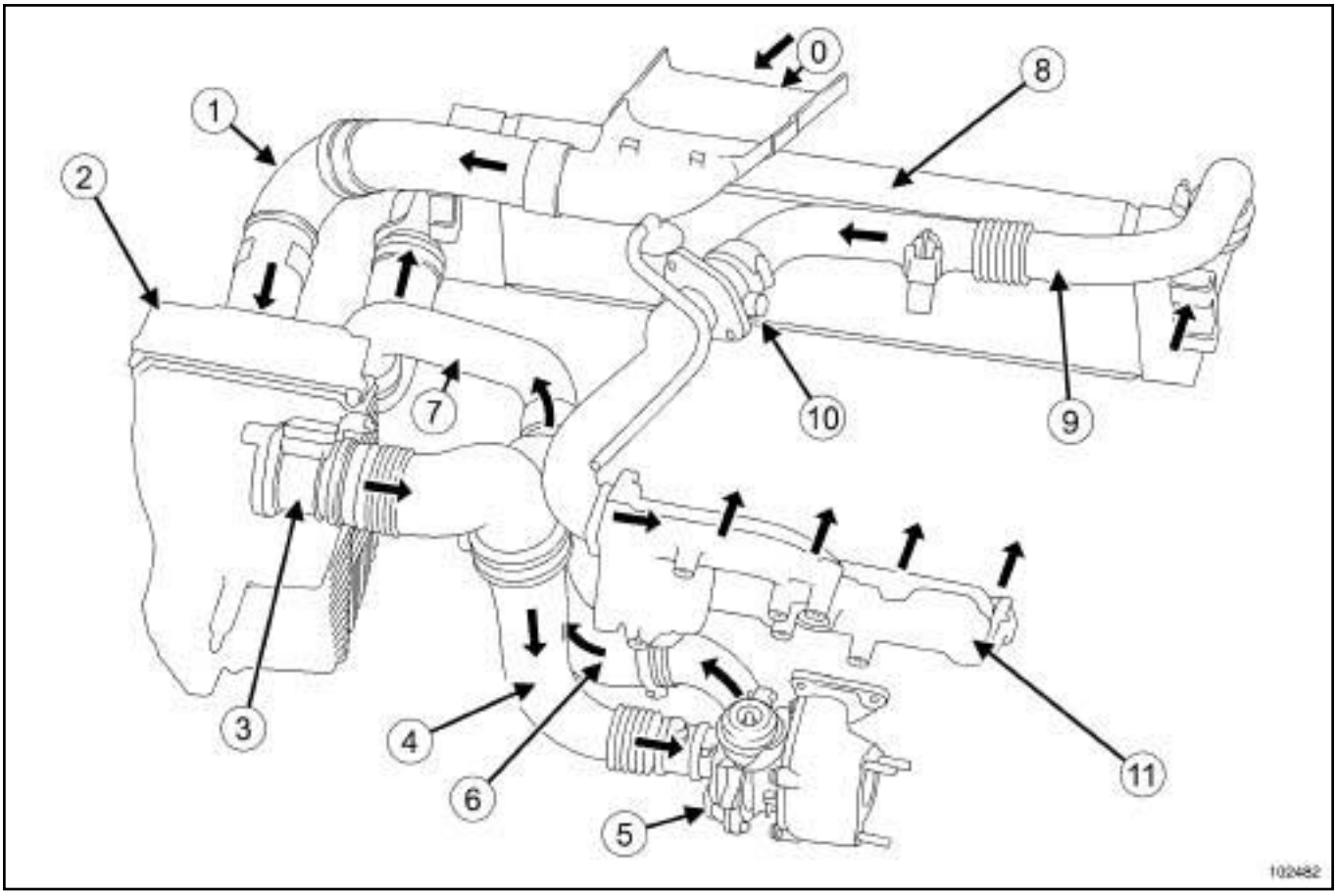

102482

(**0**)	Air inlet scoop
(**1**)	Air filter box air inlet pipe
(**2**)	Air filter box
(**3**)	Airflow meter
(**4**)	Air filter box outlet air pipe
(**5**)	Turbocharger
(**6**)	Turbocharger air outlet pipe
(**7**)	Intercooler air inlet pipe
(**8**)	Intercooler
(**9**)	Intercooler air outlet pipe
(**10**)	Engine stop flap
(**11**)	Inlet manifold

B84 or C84 or G84 or S84, and F9Q, and 808

Diagram of the air intake circuit

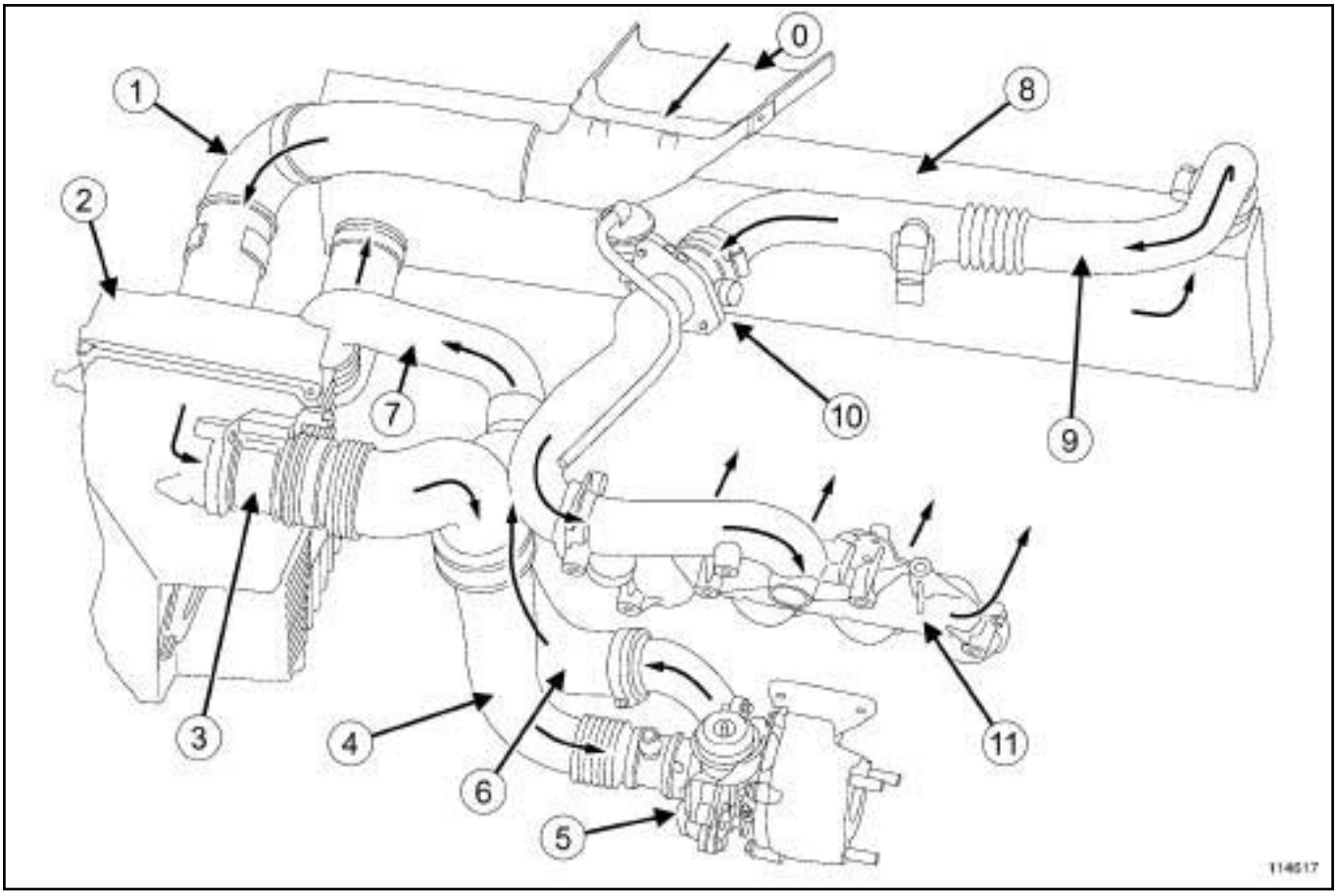

114617

(**0**)	Air inlet scoop
(**1**)	Air filter box air inlet pipe
(**2**)	Air filter box
(**3**)	Airflow meter
(**4**)	Air filter box outlet air pipe
(**5**)	Turbocharger
(**6**)	Turbocharger air outlet pipe
(**7**)	Intercooler air inlet pipe
(**8**)	Intercooler
(**9**)	Intercooler air outlet pipe
(**10**)	Engine stop flap
(**11**)	Inlet manifold

B84 or C84 or G84 or S84, and F9Q, and 803 or 804 or 816 or 818

Diagram of the air inlet circuit

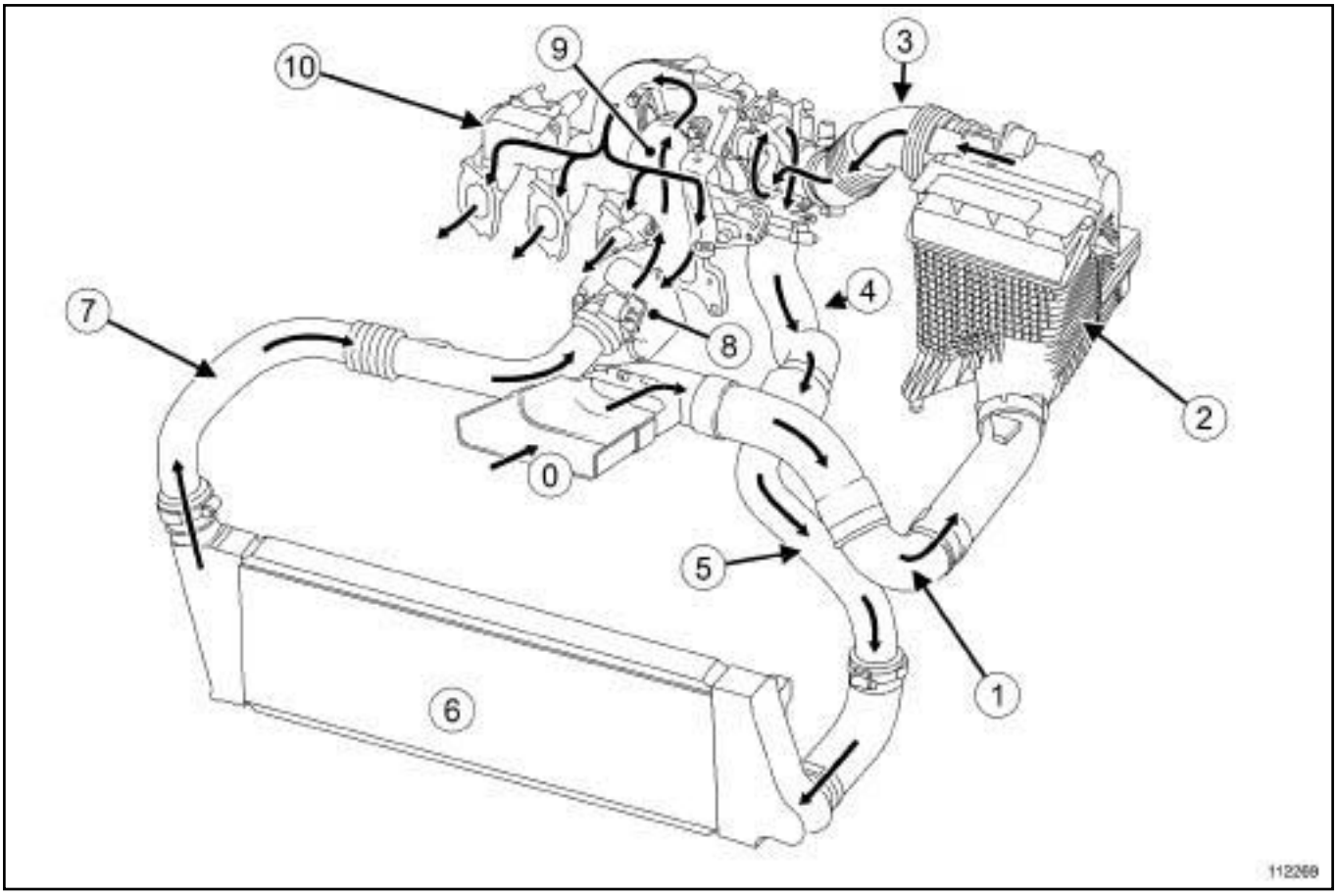

112269

(**0**)	Air inlet scoop
(**1**)	Air filter box air inlet pipe
(**2**)	Air filter box
(**3**)	Air filter box outlet air pipe
(**4**)	Turbocharger air outlet pipe
(**5**)	Intercooler air inlet pipe
(**6**)	Intercooler
(**7**)	Intercooler air outlet pipe
(**8**)	Damper valve
(**9**)	Inlet manifold air inlet pipe
(**10**)	Inlet manifold

B84 or C84 or G84 or S84, and K4J, and 730 or 732 or 740 – B84 or C84 or G84 or S84, and K4M, and 764 or 768 or 788 or 856

Diagram of the air inlet circuit

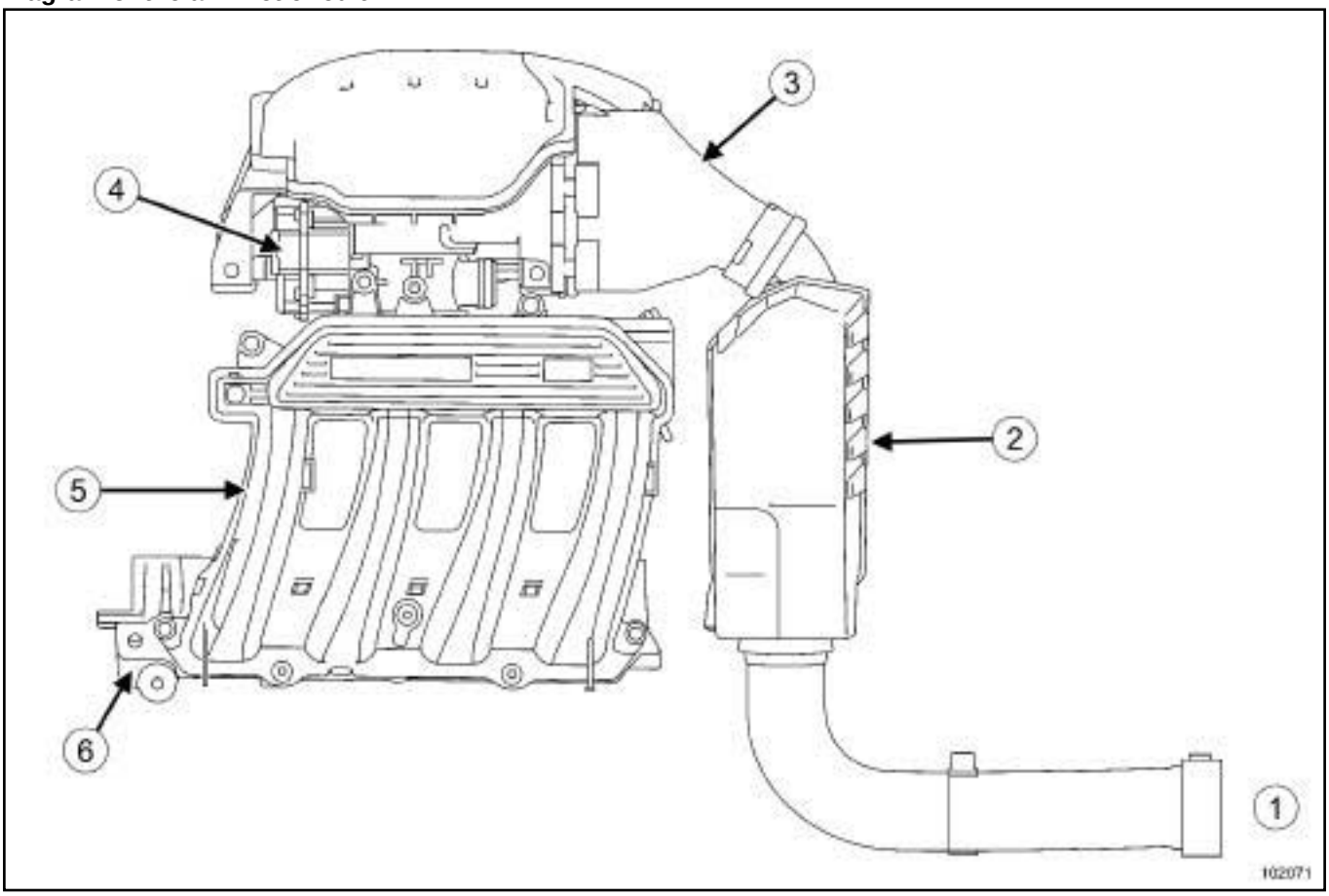

102071

(**1**)	Air inlet
(**2**)	Air resonator
(**3**)	Air filter unit
(**4**)	Air inlet valve
(**5**)	Inlet manifold
(**6**)	Injector holder shim

M9R

REMOVAL

I - OPERATION FOR REMOVAL OF PART CONCERNED

❑ Disconnect the battery (see **Battery: Removal - Refitting**) (80A, Battery).

❑ Remove the front bumper (see **Front bumper: Removal - Refitting**) (55A, Exterior protection).

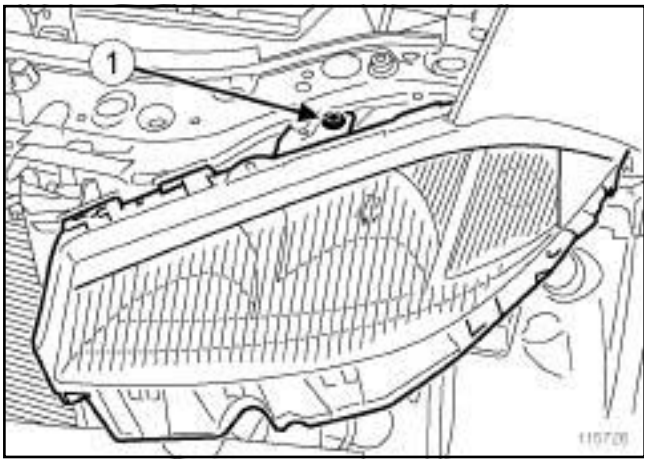

115726

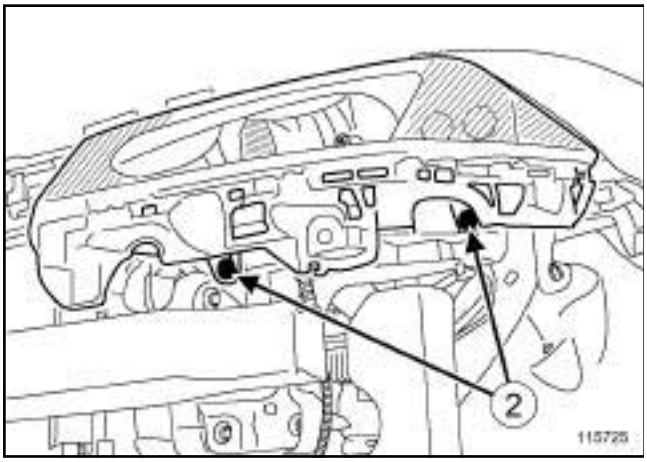

115725

❑ Remove:

- the upper mounting bolt (**1**) of the left-hand headlight,
- the lower mounting bolts (**2**) of the left-hand headlight.

❑ Disconnect the left-hand headlight connectors.

❑ Remove the left-hand headlight.

II - OPERATION FOR REMOVAL OF PART CONCERNED

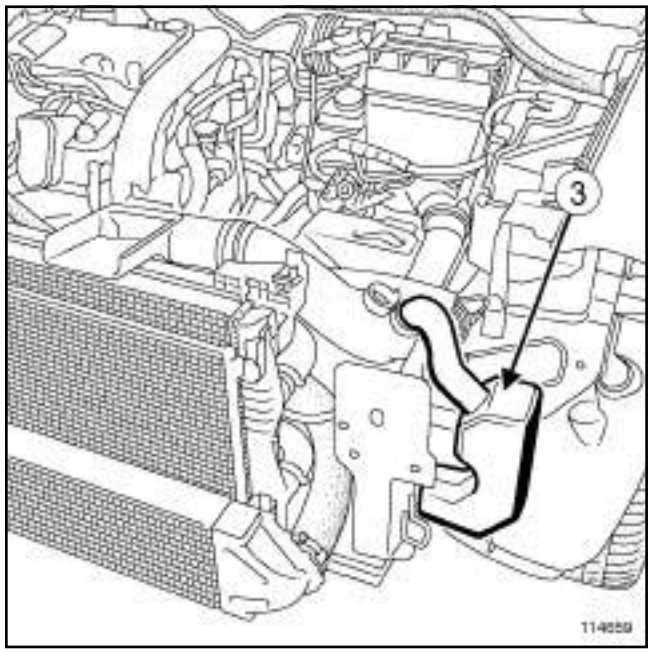

114659

❑ Remove the air resonator (**3**) starting with the end piece side of the duct that is upstream of the air filter.

REFITTING

I - REFITTING OPERATION FOR PART CONCERNED

❑ Refit the air resonator starting with the end piece side of the duct that is upstream of the air filter.

II - FINAL OPERATION

❑ Refit the left-hand headlight.

❑ Tighten:

- the left-hand headlight upper mounting bolt,
- the left-hand headlight lower mounting bolt.

❑ Disconnect the left-hand headlight connectors.

❑ Refit the front bumper (see **Front bumper: Removal - Refitting**) (55A, Exterior protection).

❑ Connect the battery (see **Battery : Removal - Refitting**) (80A, Battery).

B84 or C84 or G84 or S84, and K4J, and 730 or 732

REPLACING THE FILTER ELEMENT

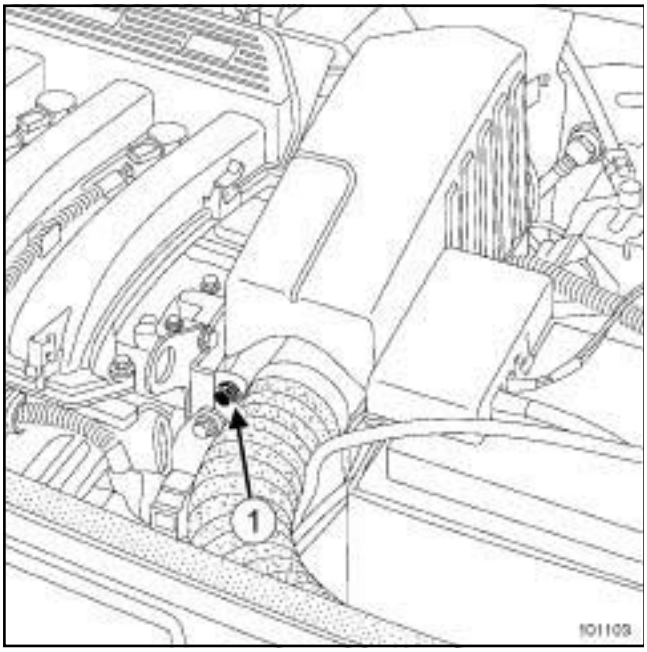

101103

❑ Remove:

- the air resonator mounting bolt (**1**) ,
- the air resonator unit.

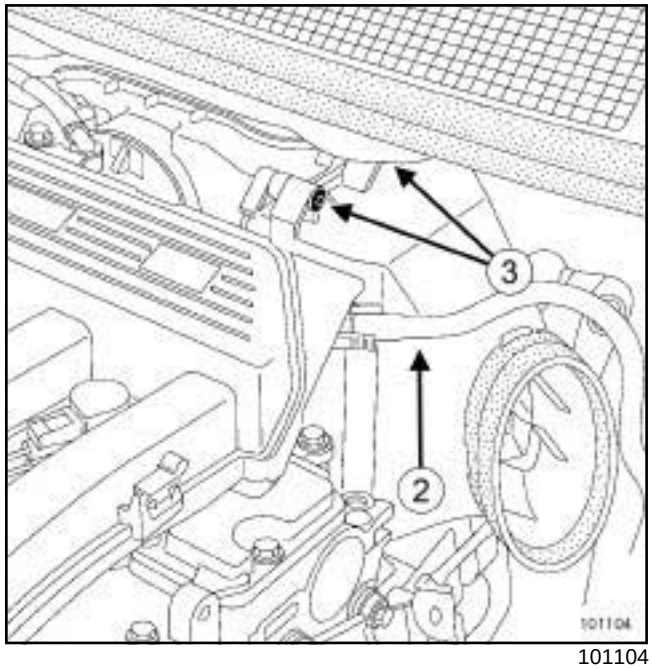

101104

❑ Disconnect the brake servo vacuum pipe (**2**) from the inlet manifold.

> **WARNING**
> Do not damage the vacuum outlet on the inlet manifold. If it is damaged, the inlet manifold will need to be replaced.

❑ Remove:

- the two mounting bolts (**3**) from the air filter cover,
- the filter element.

F4R or F9Q or K4M or K9K or M9R

REMOVAL

I - REMOVAL PREPARATION OPERATION

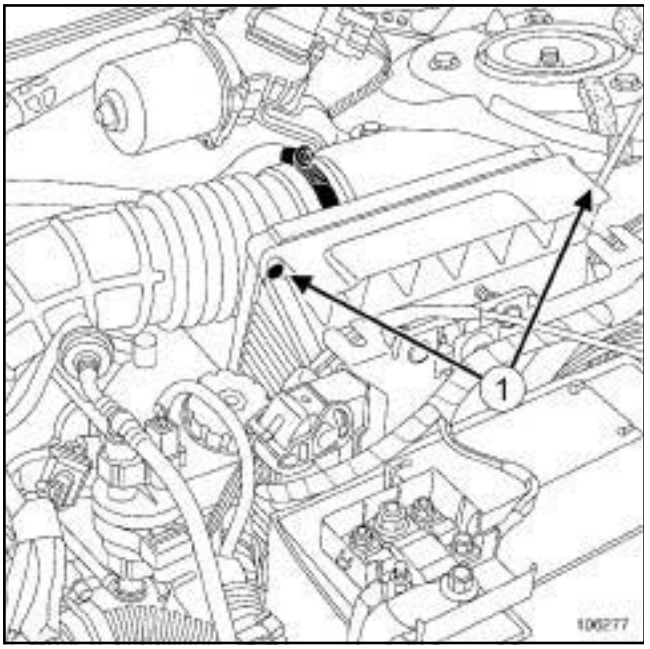

106277

❑ Remove the bolts (**1**) from the air filter cover.

II - REMOVAL OPERATION FOR PART CONCERNED

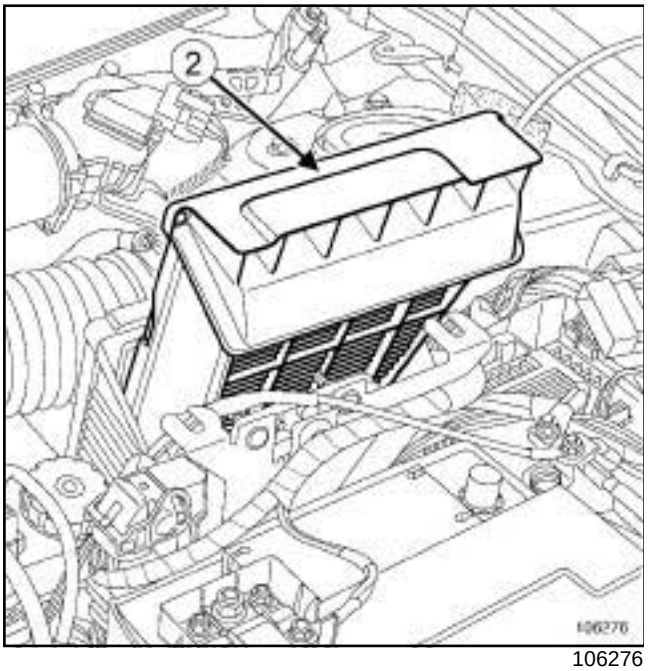

106276

❑ Remove:

- the cover (**2**) ,
- the air filter.

REFITTING

I - REFITTING OPERATION FOR PART CONCERNED

❑ Clean the air filter unit.

❑ Refit:

- the air filter,
- the cover.

II - FINAL OPERATION.

❑ Tighten the air filter cover bolts.

K4J – K4M, and 764 or 768 or 788 or 856

Essential special tooling	
Ele. 1294-01	Windscreen wiper arm removing tool.

Tightening torques ▽	
air filter box bolts	**9 N.m**

REMOVAL

❑ Remove the engine covers.

❑ Disconnect the battery (see **Battery: Removal - Refitting**) (MR 364, 80A, Battery).

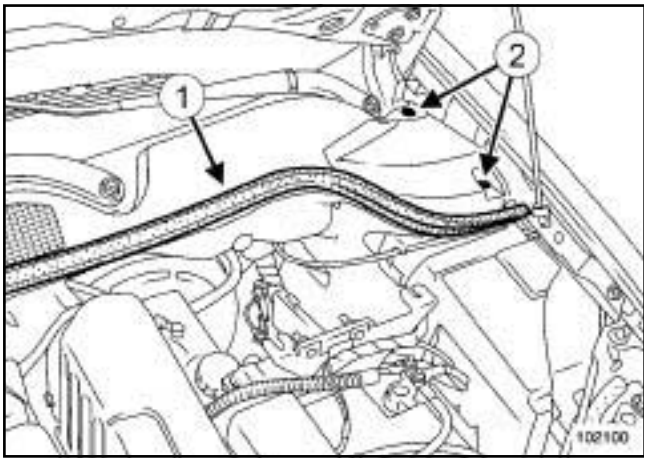

102100

❑ Remove:

- the seal (**1**) ,
- the plastic rivets (**2**) .

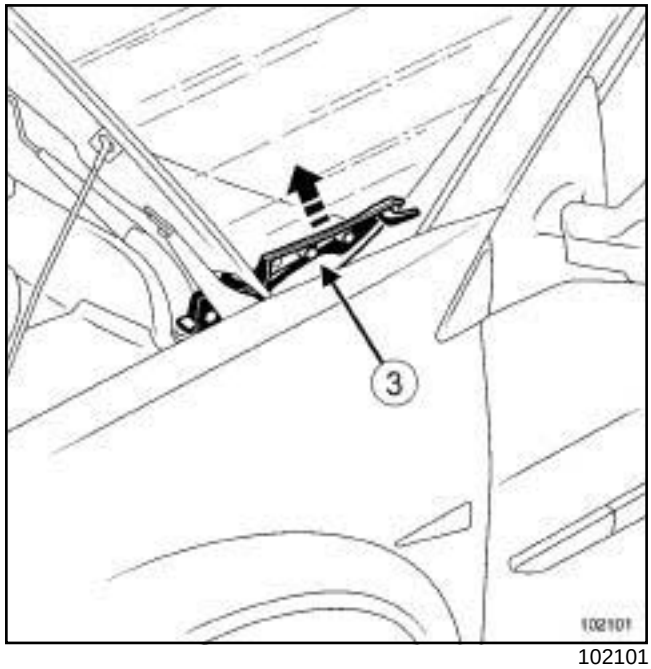

102101

❑ Unclip the trim (**3**) .

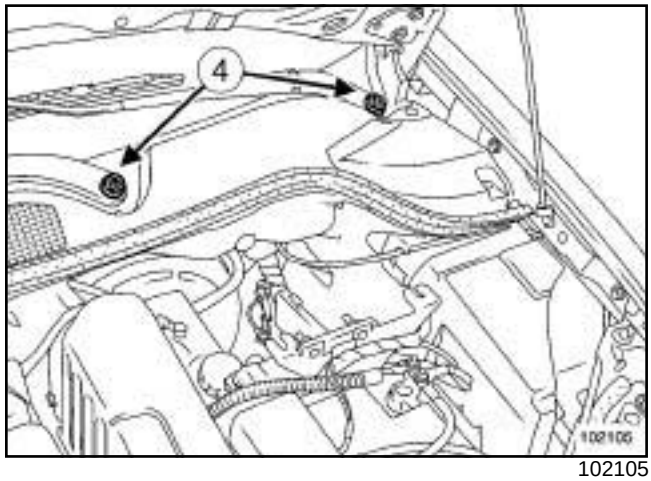

102105

❑ Remove the wiper arms (**4**) using the **(Ele. 1294-01)**.

❑ Remove the scuttle panel grille.

K4J – K4M, and 764 or 768 or 788 or 856

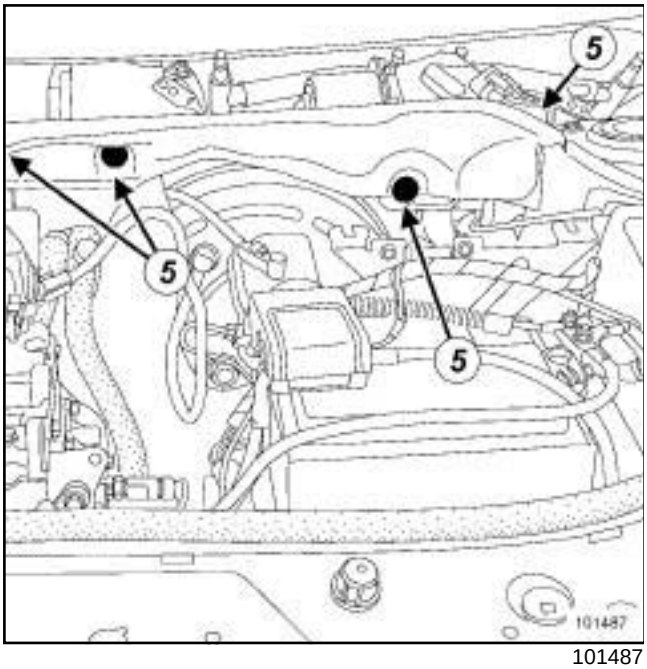

101487

❑ Remove:

- the bulkhead soundproofing pad mountings (**5**) ,
- the bulkhead soundproofing material.

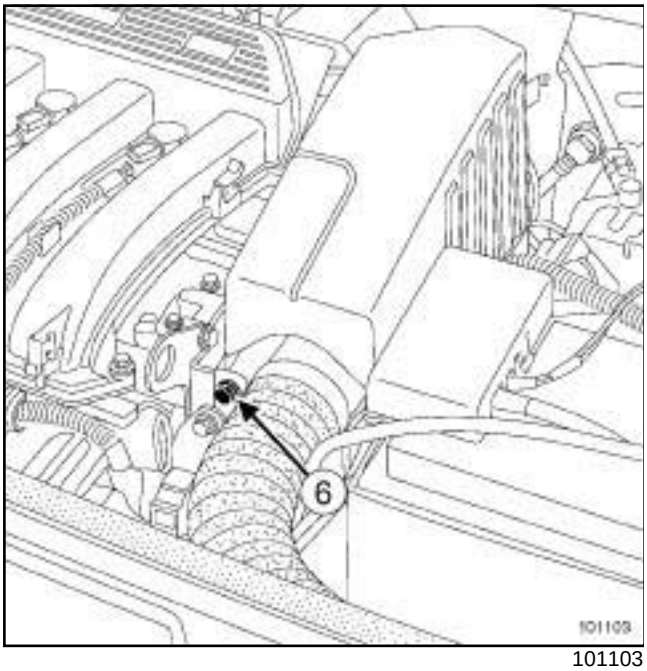

101103

❑ Remove:

- the air resonator bolt (**6**) ,
- the air resonator.

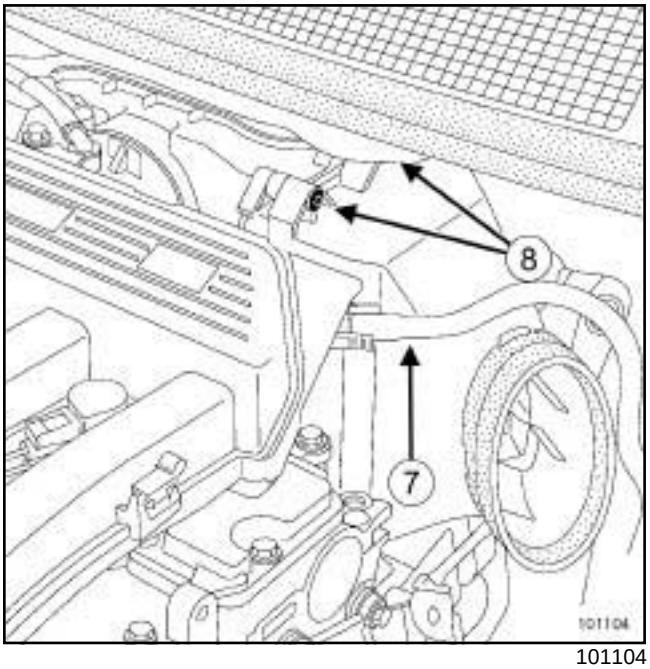

101104

❑ Disconnect the brake servo vacuum pipe (**7**) on the intake distributor.

WARNING

Do not damage the vacuum outlet on the intake distributor. If it is damaged, the intake distributor will need to be replaced.

❑ Remove:

- the bolts (**8**) from the air filter cover,
- the filter element.

K4J – K4M, and 764 or 768 or 788 or 856

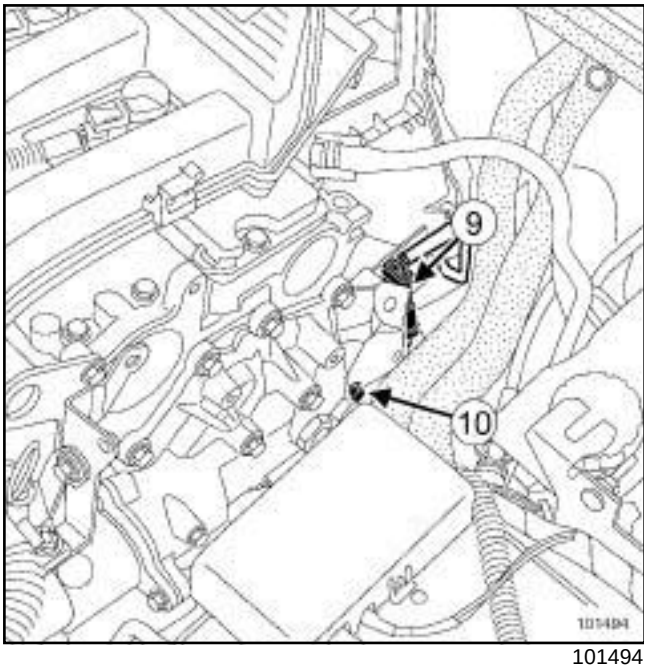

101494

❑ Disconnect the oxygen sensor connector (**9**) .

❑ Remove the retaining bracket (**10**) .

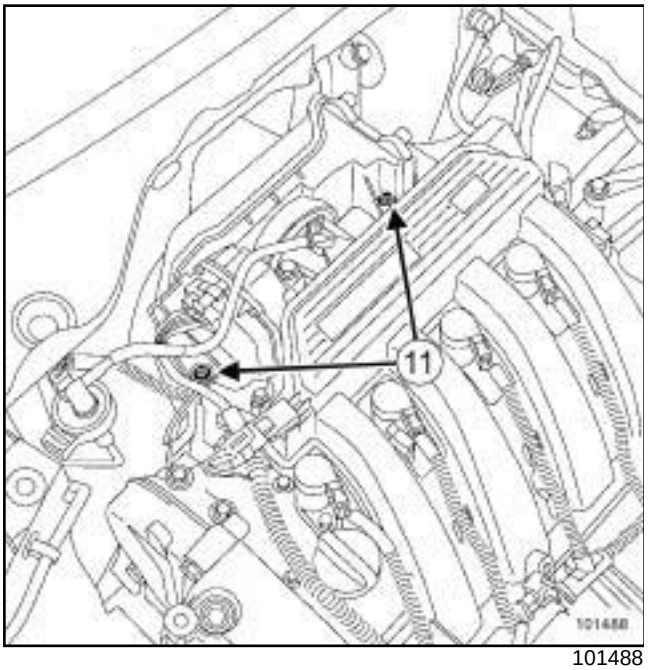

101488

❑ Remove:

- the bolts (**11**) from the air unit,
- the air filter box.

REFITTING

❑ Replace:

- the throttle body seal each time it is removed using grease to make fitting easier,
- the plastic rivets and clips every time they are removed.

❑ Proceed in the reverse order to removal.

❑ Torque tighten the **air filter box bolts (9 N.m)**.

❑ Connect the battery (see **Battery : Removal - Refitting**) (MR 364, 80A, Battery).

B84 or C84 or E84 or K84 or L84, and M9R

Essential special tooling	
Mot. 1608	Torque screwdriver 1 to 6.6 N.m.

Tightening torques ▽	
air flowmeter mounting bolts	**4 N.m**
air duct clip mounting bolt between the air filter unit and the turbocharger	**5.5 N.m**
front end panel lower mounting bolts	**44 N.m**
front end panel upper mounting bolts	**21 N.m**
battery tray mounting bolts	**21 N.m**
wiring harness mounting nut	**8 N.m**

REMOVAL

I - REMOVAL PREPARATION OPERATION

❑ Remove

- the engine protectors,
- the battery (see **Battery: Removal - Refitting**) (80A, Battery),
- the engine undertray,
- the front bumper (see **Front bumper: Removal - Refitting**) (55A, Exterior protection),

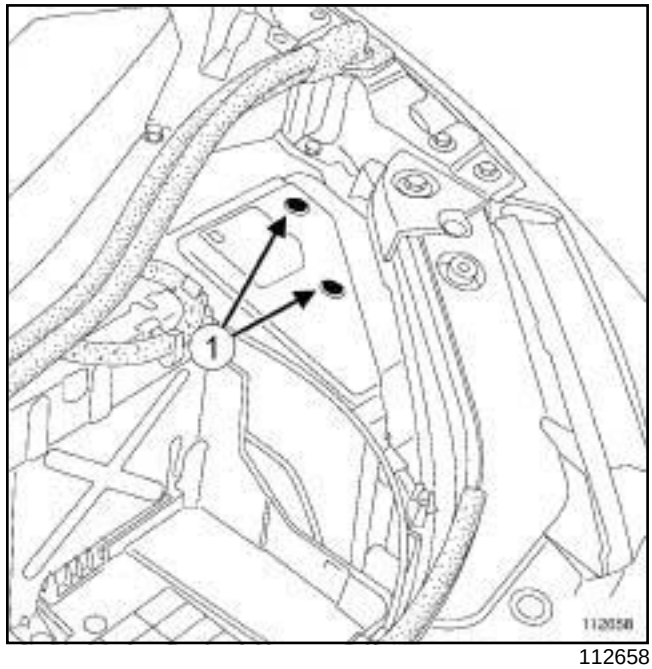

112658

❑

Remove:

- the Protection and Switching Unit cover mounting bolts (**1**) ,
- the Protection and Switching Unit cover.

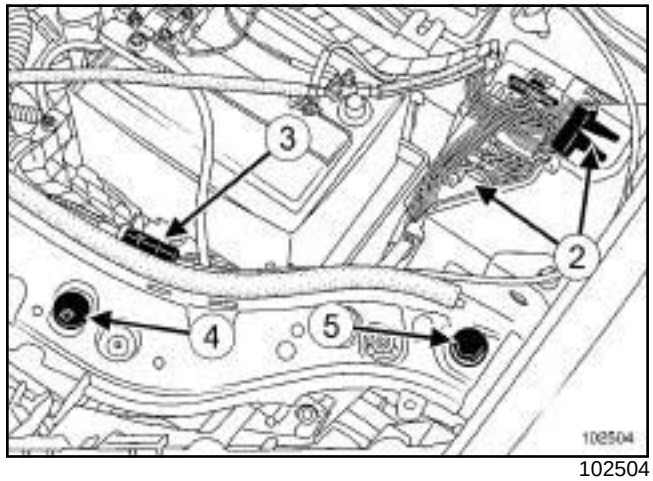

102504

❑ Disconnect the connectors (**2**) .

❑ Unclip the bonnet release cable (**3**) .

❑ Remove:

- the clips (**4**) ,
- the upper mounting bolts (**5**) of the front end panel.

B84 or C84 or E84 or K84 or L84, and M9R

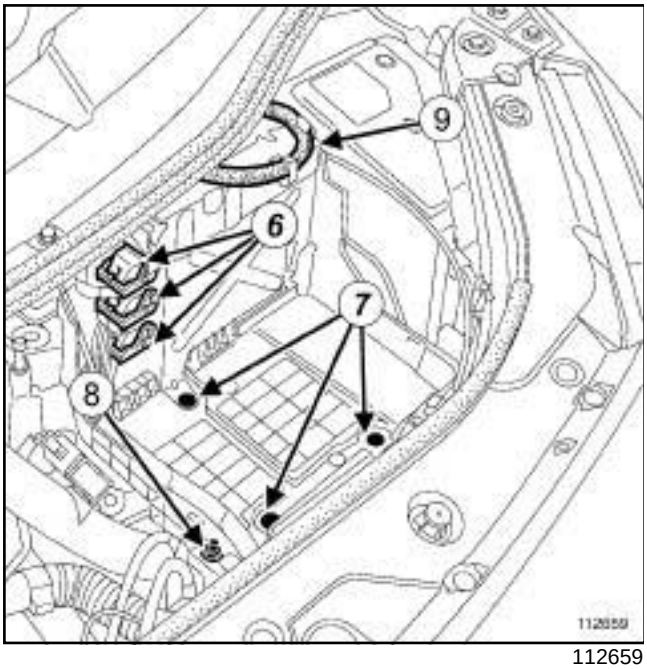

112659

- ❑ Disconnect the injection computer connectors (**6**) .
- ❑ Remove:
  - the battery tray mounting bolt (**7**) ,
  - the mounting nut (**8**) from the wiring harness.
- ❑ Move the wiring harness to one side.
- ❑ Unclip the wiring harness (**9**) from the negative battery terminal.
- ❑ Remove the battery tray and the injection computer.

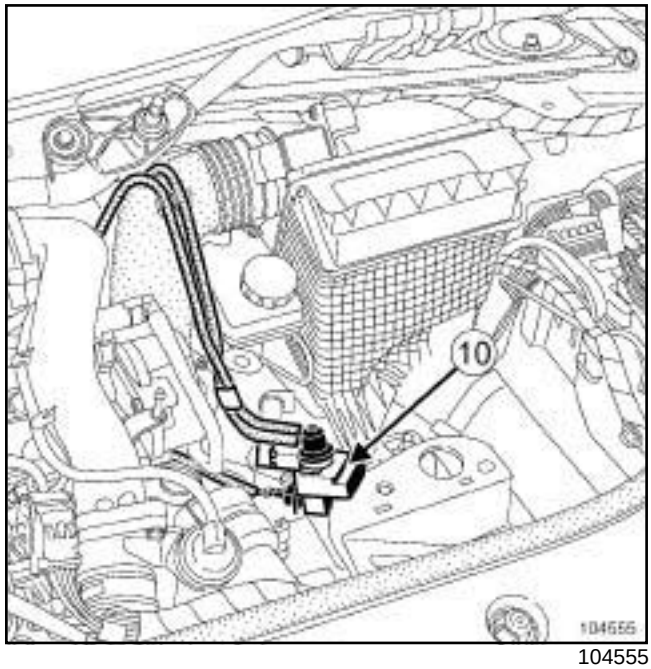

104555

- ❑ Move the turbocharger regulation solenoid valve (**10**) to one side.
- ❑ Remove the air duct between the air filter unit and the turbocharger.

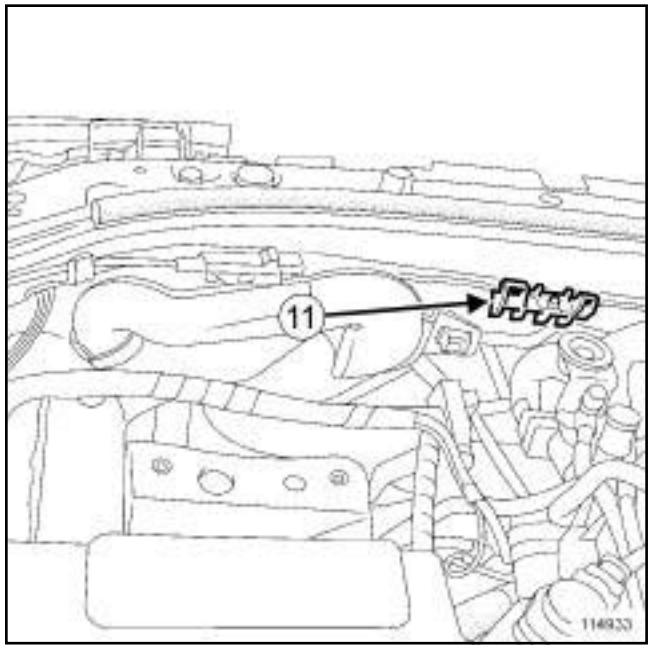

114933

- ❑ Unclip the air inlet scoop (**11**) .

B84 or C84 or E84 or K84 or L84, and M9R

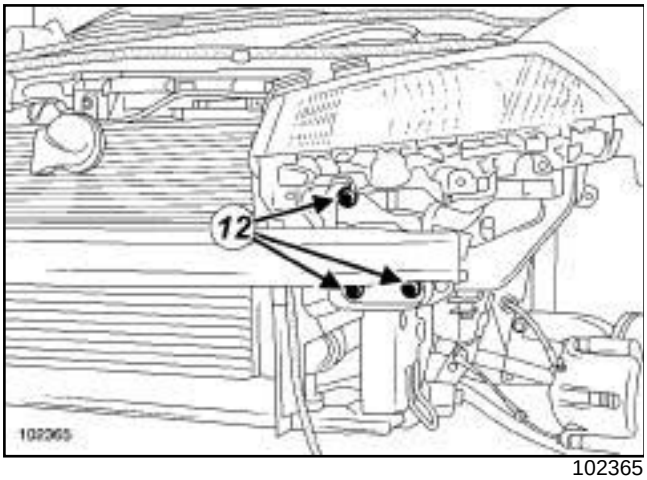

102365

❑ Remove:

- the front end panel lower mounting bolts (**12**) ,
- the front of the vehicle.

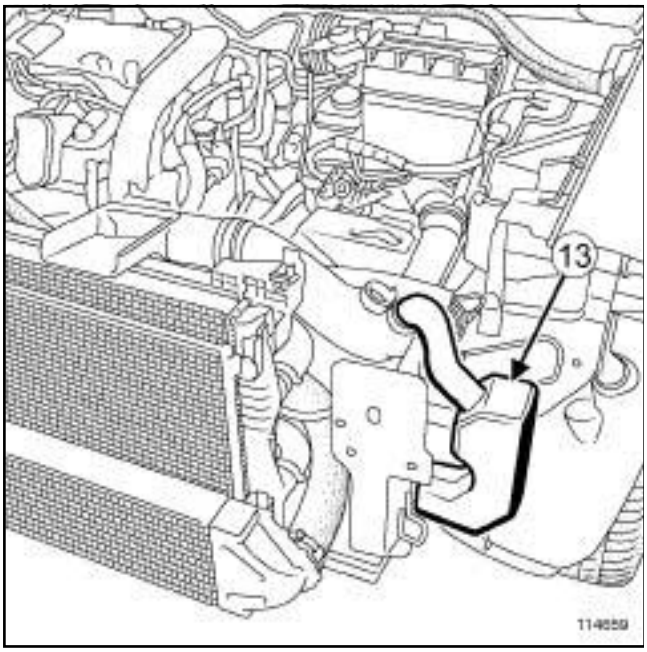

114659

❑ Remove the air resonator (**13**) .

II - OPERATION FOR REMOVAL OF PART CONCERNED

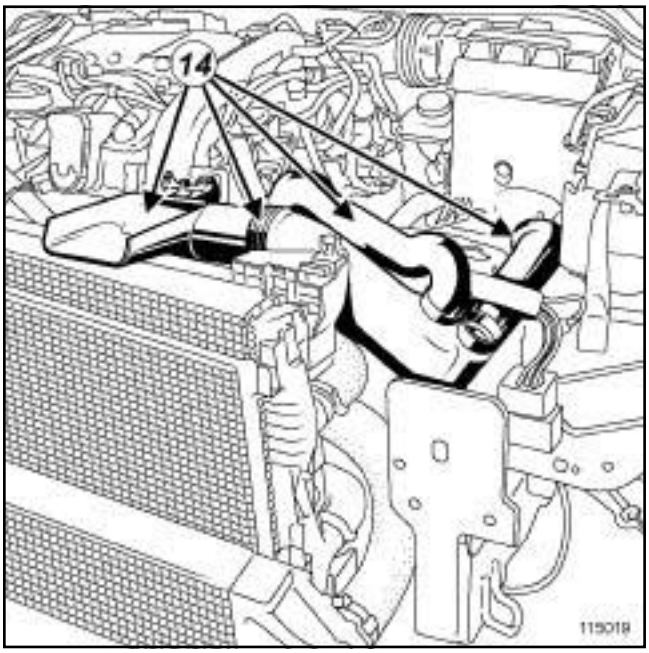

115019

❑ Remove the air inlet duct (**14**) .

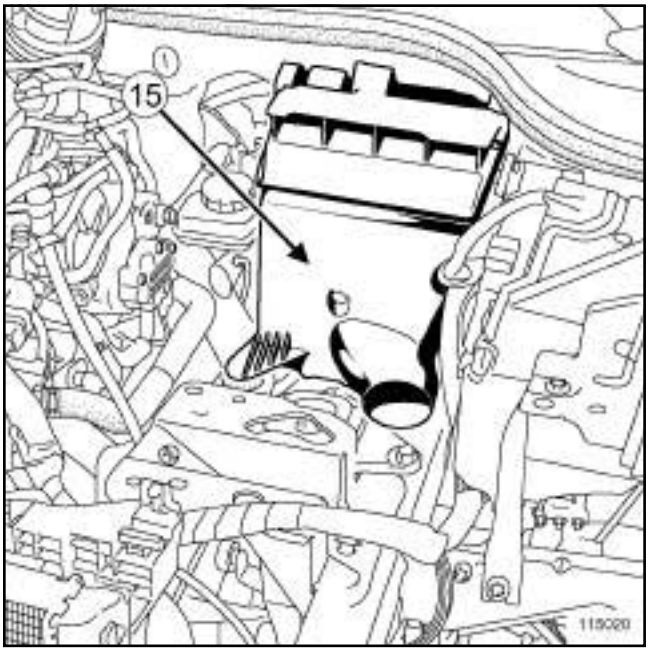

115020

❑ Remove the air filter unit (**15**)

B84 or C84 or E84 or K84 or L84, and M9R

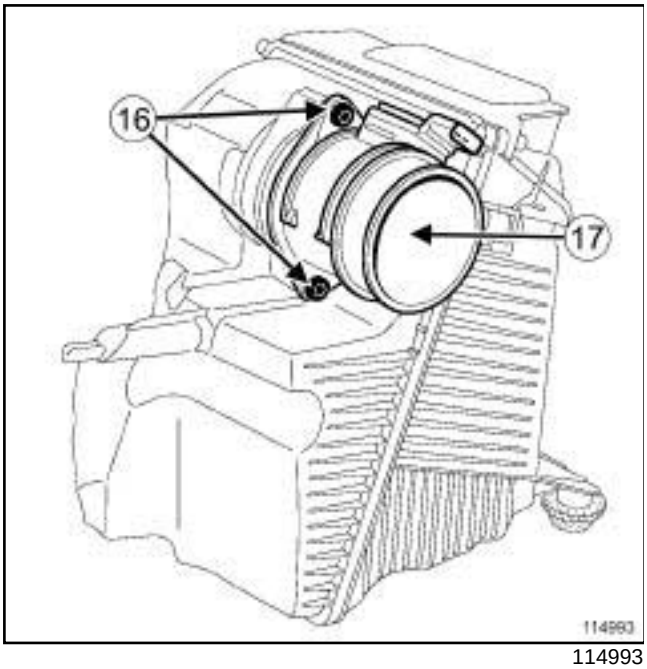

114993

❑ Remove

- the mounting bolts (**16**) from the air flowmeter,
- the air flowmeter (**17**) .

REFITTING

I - REFITTING OPERATION FOR PART CONCERNED

❑ Refit the air flowmeter onto the air filter unit.

❑ Torque tighten the **air flowmeter mounting bolts (4 N.m)** using the tool **(Mot. 1608)**.

❑ Refit the air filter unit.

II - FINAL OPERATION

❑ Refit:

- the air inlet duct,
- the air resonator,
- the front end panel mounting bolts,
- the front end panel clips,
- the front end panel mounting bolts.

❑ Torque tighten:

- the **air duct clip mounting bolt between the air filter unit and the turbocharger (5.5 N.m)**,
- the **front end panel lower mounting bolts (44 N.m)**,
- the **front end panel upper mounting bolts (21 N.m)**.

❑ Clip on:

- the air inlet scoop to the front end panel,
- the bonnet opening cable

❑ Fit the turbocharger regulation solenoid valve onto the air filter unit.

❑ Refit the battery tray and the computer.

❑ Torque tighten the **battery tray mounting bolts (21 N.m)**.

❑ Refit the wiring harness mounting nut.

❑ Torque tighten the **wiring harness mounting nut (8 N.m)**.

❑ Connect:

- the injection computer connectors,
- the air flowmeter connector,
- the connectors to the Protection and Switching Unit box.

❑ Refit

- the battery (see **Battery : Removal - Refitting**) (80A, Battery),
- the front bumper (see **Front bumper: Removal - Refitting**) (55A, Exterior protection),
- the engine undertray,
- the engine protectors.

K4M, and 760 or 761 or 766 or 812 or 813 – F4R, and 770 or 771 or 776

Tightening torques ▽	
battery tray mounting bolts	**21 Nm**

REMOVAL

❑ Remove the engine covers.

❑ Remove the battery (see **Battery : Removal - Refitting**) (MR 364, 80A, Battery).

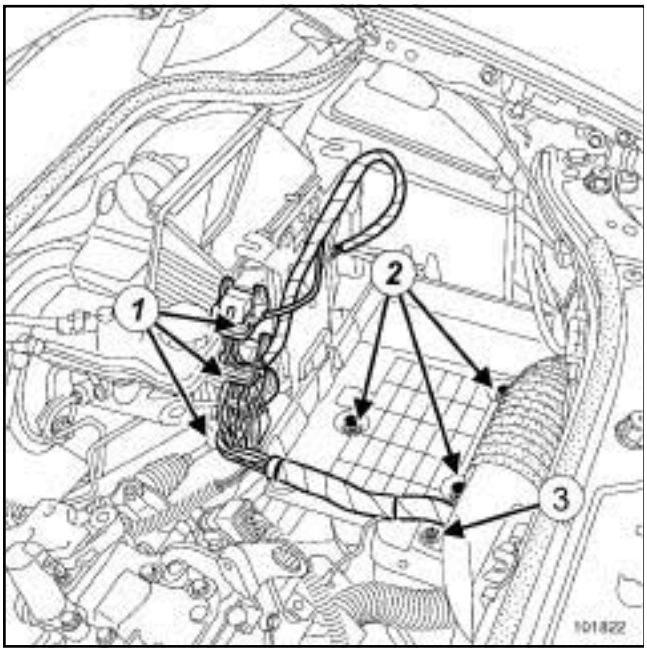

101822

❑ Disconnect the injection computer connectors (**1**) .

❑ Remove:

- the battery tray bolts (**2**) ,
- the wiring harness bracket (**3**) .

❑ Unclip the wiring harnesses from the battery tray.

❑ Remove the battery tray.

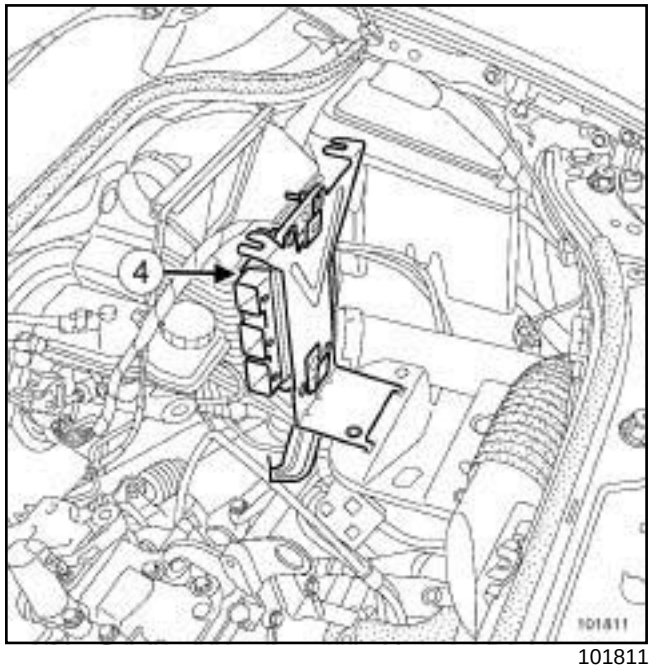

101811

❑ Remove the injection computer (**4**) and its support.

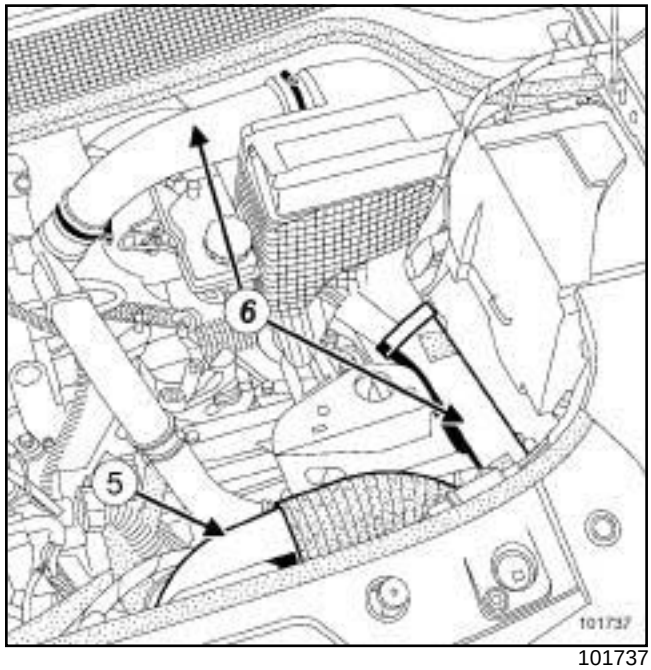

101737

❑ Remove:

- the air inlet sleeve (**5**) ,
- the air ducts (**6**) ,
- the air filter box.

K4M, and 760 or 761 or 766 or 812 or 813 – F4R, and 770 or 771 or 776

REFITTING

- ❑ Proceed in the reverse order to removal.
- ❑ Torque tighten the **battery tray mounting bolts (21 Nm)**.
- ❑ Connect the battery (see **Battery : Removal - Refitting**) (MR 364, 80A, Battery).

B84 or C84 or G84 or S84, and K9K, and 722 or 724 or 728 or 729

Tightening torques ▽	
battery tray bolts	**21 N.m**

REMOVAL

❑ Remove the engine covers.

❑ Remove the battery (see **Battery : Removal - Refitting**) (80A, Battery).

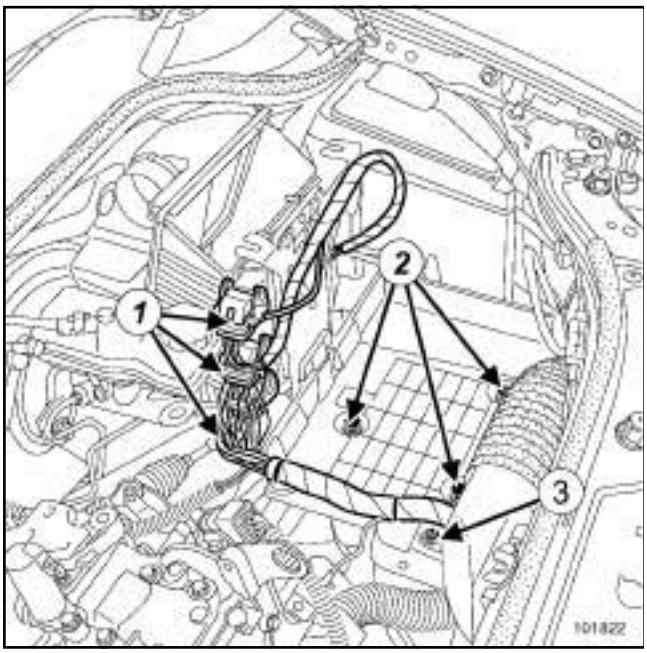

101822

❑ Disconnect the injection computer connectors (**1**) .

❑ Remove:

- the battery tray bolts (**2**) ,
- the electrical wiring bracket (**3**) .

❑ Unclip the electrical wiring from the battery tray.

❑ Remove the battery tray.

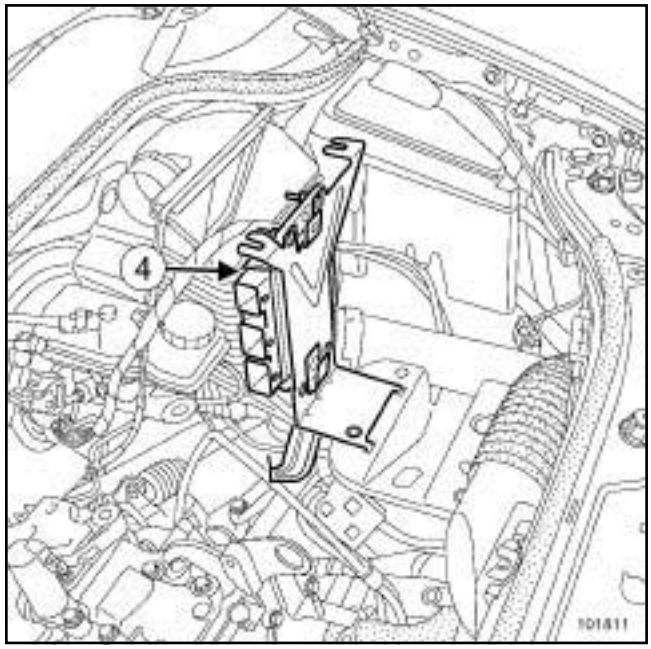

101811

❑ Remove the injection computer (**4**) and its mounting.

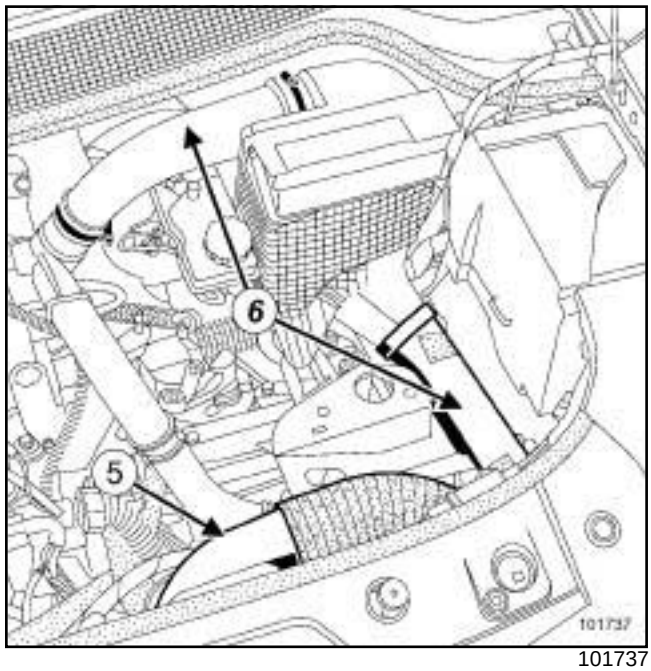

101737

❑ Remove:

- the air inlet sleeve (**5**) ,
- the air ducts (**6**) ,
- the air filter unit.

B84 or C84 or G84 or S84, and K9K, and 722 or 724 or 728 or 729

REFITTING

- Proceed in the reverse order to removal.
- Torque tighten the **battery tray bolts (21 N.m)**.
- Refit the battery (see **Battery : Removal - Refitting**) (80A, Battery).

F9Q – K9K, and 732 or 734

Tightening torques ▽	
battery tray mounting bolts	**21 Nm**

REMOVAL

❑ Remove the engine covers.

❑ Remove the battery (see **Battery : Removal - Refitting**) (MR 364, 80A, Battery).

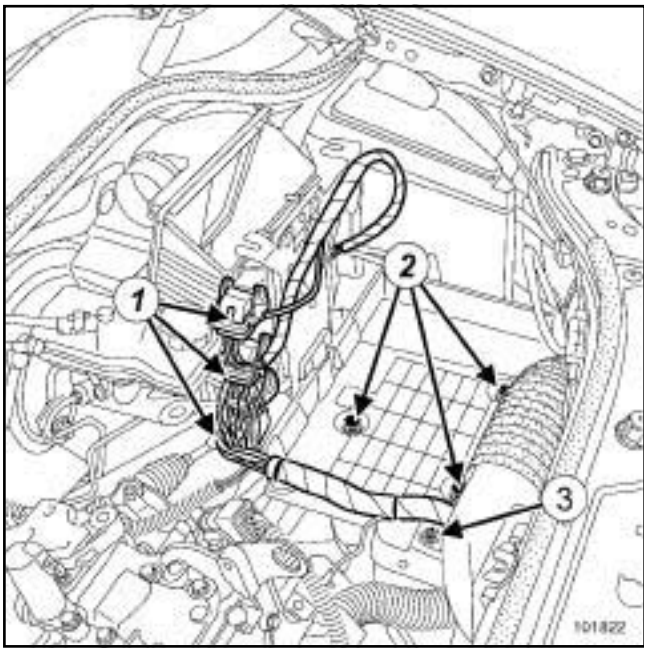

101822

❑ Disconnect the injection computer connectors (**1**) .

❑ Remove:

- the battery tray mounting bolts (**2**) ,
- the wiring harness bracket (**3**) .

❑ Unclip the wiring harnesses from the battery tray.

❑ Remove the battery tray.

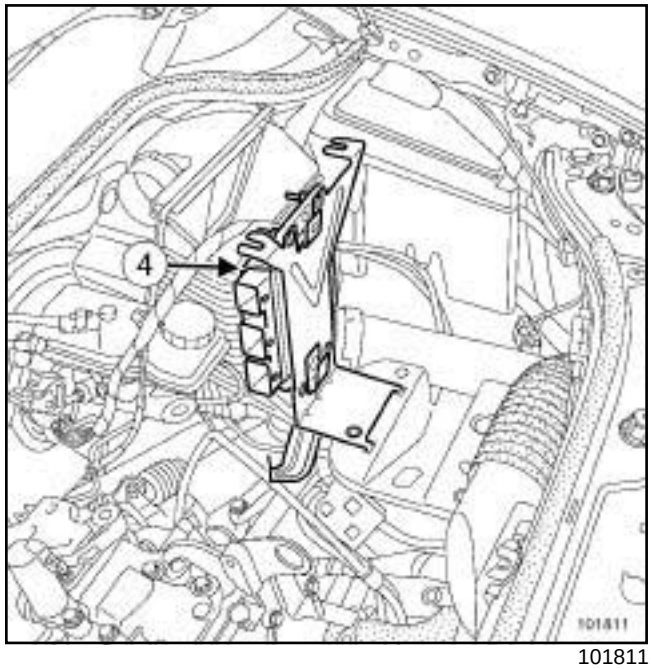

101811

❑ Remove the injection computer (**4**) and its support.

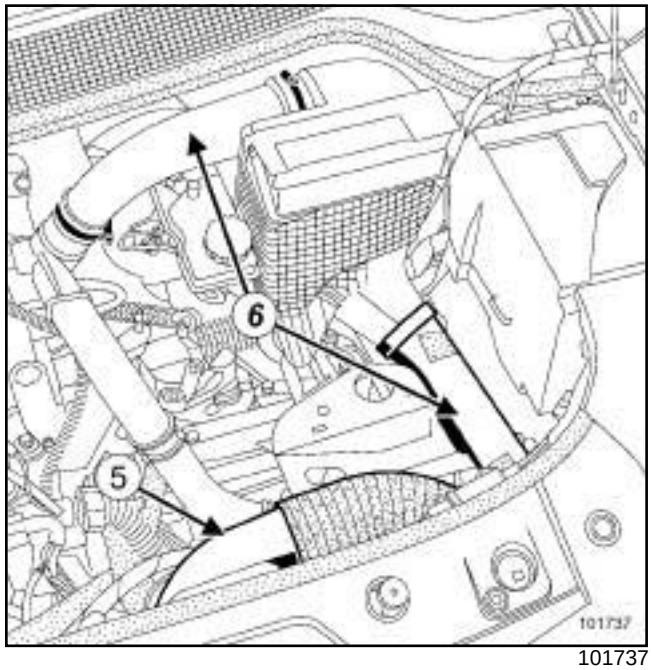

101737

❑ Remove:

- the air inlet sleeve (**5**) ,
- the air ducts (**6**) ,
- the air filter box.

F9Q – K9K, and 732 or 734

REFITTING

- Proceed in the reverse order to removal.
- Torque tighten the **battery tray mounting bolts (21 Nm)**.
- Refit the battery (see **Battery : Removal - Refitting**) (MR 364, 80A, Battery).

B84 or C84 or E84 or K84 or L84, and F4R, and 774

Tightening torques ▽	
battery tray mounting bolts	**21 Nm**
battery cover bolts	**4 Nm**

REMOVAL

❑ Remove:

- the engine covers,
- the battery (see **Battery: Removal - Refitting**) (MR 364, 80A, Battery).

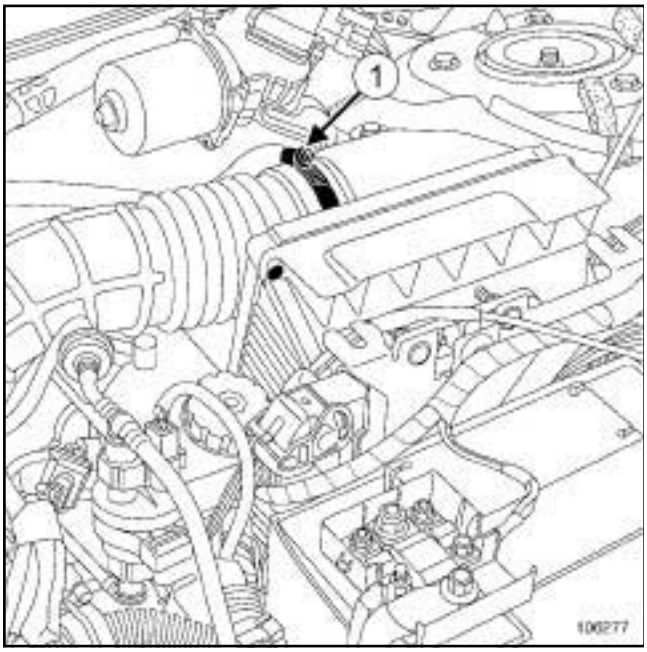

106277

❑ Move aside the air duct (**1**) .

❑ Disconnect the injection computer connectors.

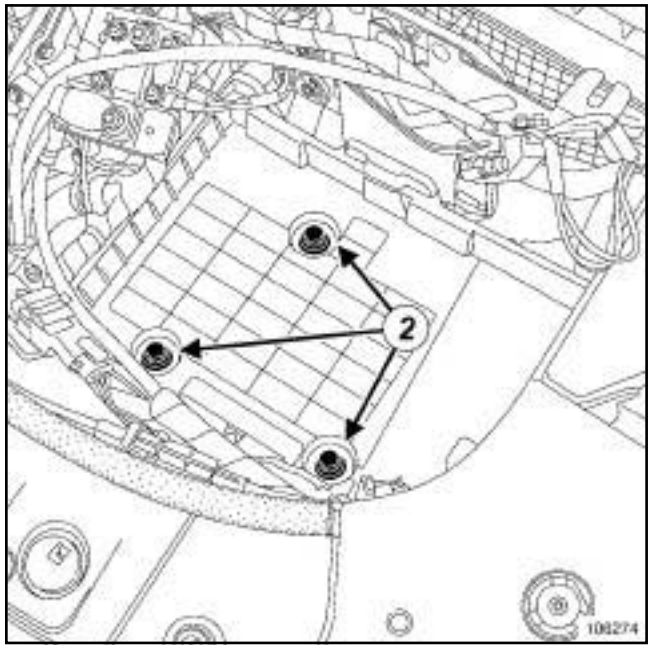

106274

❑ Remove the three battery tray mounting bolts (**2**) .

❑ Unclip the wiring harnesses from the battery tray.

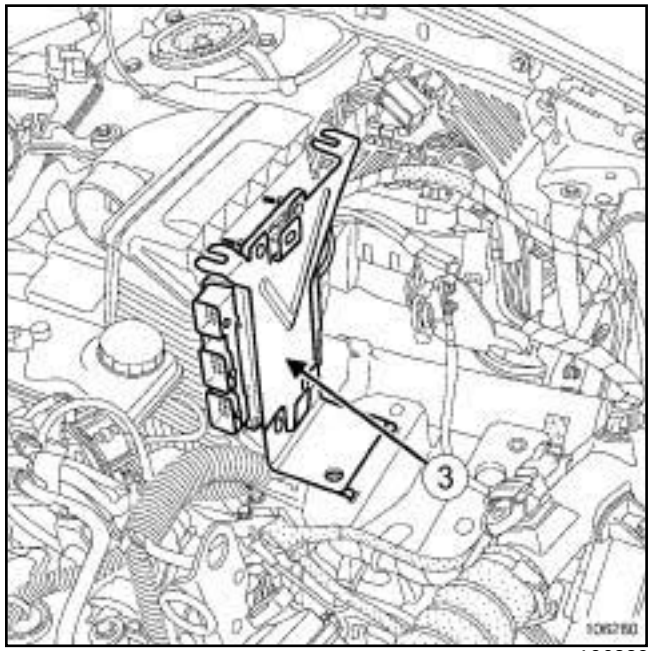

106280

❑ Remove the injection computer (**3**) and its support.

B84 or C84 or E84 or K84 or L84, and F4R, and 774

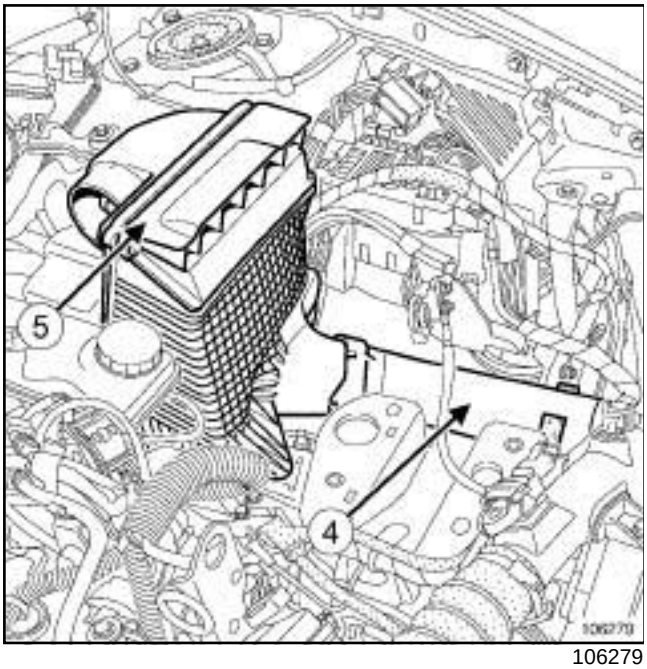

106279

- Remove:
  - the inlet trunking (**4**) ,
  - the air filter unit (**5**) .

REFITTING

- Proceed in the reverse order to removal.
- Torque tighten the **battery tray mounting bolts (21 Nm)**.
- Refit the battery (see **Battery : Removal - Refitting**) (MR 364, 80A, Battery).
- Torque tighten the **battery cover bolts (4 Nm)**.

B84 or C84 or G84 or S84, and F9Q

Essential special tooling	
Mot. 1608	Torque screwdriver 1 to 6.6 N.m.

Tightening torques ▽	
air flowmeter bolts	**4 Nm**
air filter box air outlet pipe clips	**5.5 Nm**

REMOVAL

I - REMOVAL PREPARATION OPERATION

❑ Remove the front engine cover.

❑ Disconnect the battery (see **Battery: Removal - Refitting**) (MR 364, 80A, Battery).

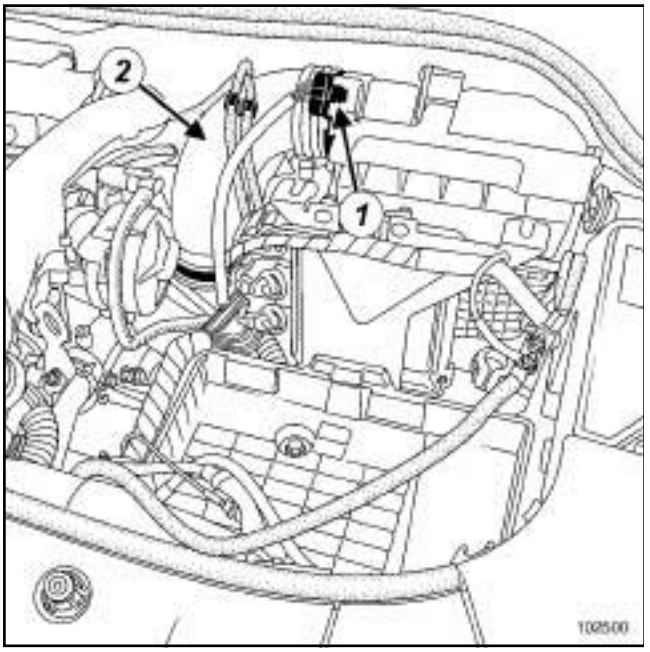

102500

❑ Disconnect:

- the air flow sensor connector (**1**) ,
- the turbocharging pressure regulation solenoid valve connector.

❑ Move aside the turbocharging pressure regulator solenoid valve.

❑ Undo the clips on the air filter box outlet air pipe.

❑ Disconnect the air filter box air outlet pipe (**2**) .

II - OPERATION FOR REMOVAL OF PART CONCERNED

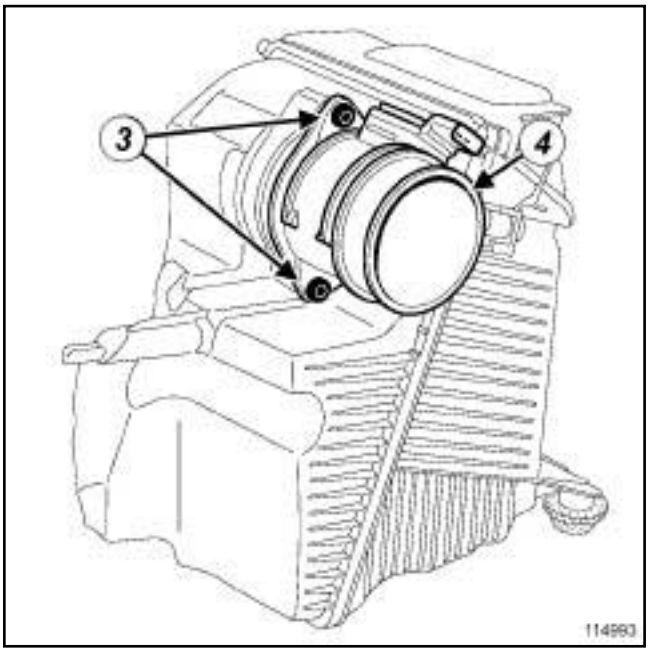

114993

❑ Remove:

- the bolts (**3**) from the air flowmeter,
- the air flowmeter (**4**) .

REFITTING

I - REFITTING OPERATION FOR PART CONCERNED

❑ Refit:

- the air flowmeter, fitted with a new seal,
- the air flowmeter bolts.

❑ Torque tighten the **air flowmeter bolts (4 Nm)** using the **(Mot. 1608)**.

II - FINAL OPERATION.

❑ Connect the air filter box outlet air pipe.

❑ Torque tighten the **air filter box air outlet pipe clips (5.5 Nm)**.

❑ Position the turbocharger pressure regulating solenoid valve.

❑ Connect:

- the turbocharging pressure regulation solenoid valve connector,
- the air flowmeter connector,

B84 or C84 or G84 or S84, and F9Q

- the battery (see **Battery : Removal - Refitting**) (MR 364, 80A, Battery).

❑ Refit the engine cover.

B84 or C84 or E84 or K84 or L84, and M9R

Essential special tooling	
Mot. 1608	Torque screwdriver 1 to 6.6 N.m.

Tightening torques ▽	
air flowmeter bolts on the air filter box	**4 Nm**
air filter box air outlet pipe clips	**5.5 Nm**

REMOVAL

I - REMOVAL PREPARATION OPERATION

❑ Disconnect the battery (see **Battery: Removal - Refitting**) (MR 364, 80A, Battery).

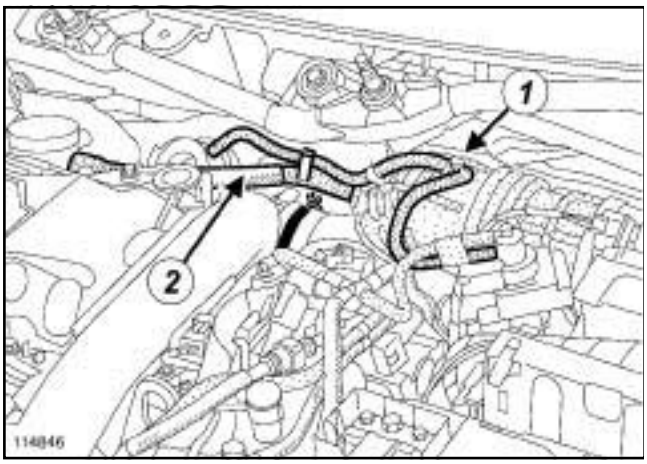

114846

❑ Unclip:

- the turbocharger pressure regulator solenoid valve hose (**1**) from the air filter box outlet air pipe,
- the oil vapour rebreathing pipe (**2**) on the air filter box outlet air pipe.

❑ Unpick the turbocharger regulation solenoid valve on the air filter unit.

❑ Disconnect the air flow sensor connector.

❑ Move the turbocharger regulation solenoid valve and air flowmeter connector aside.

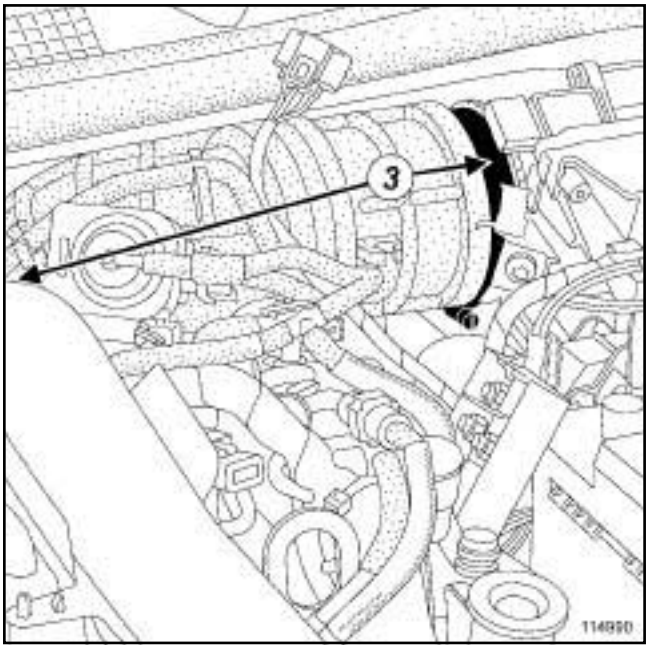

114990

❑ Undo the air filter unit air outlet pipe clips (**3**) .

❑ Remove the air filter box air outlet pipe.

II - OPERATION FOR REMOVAL OF PART CONCERNED

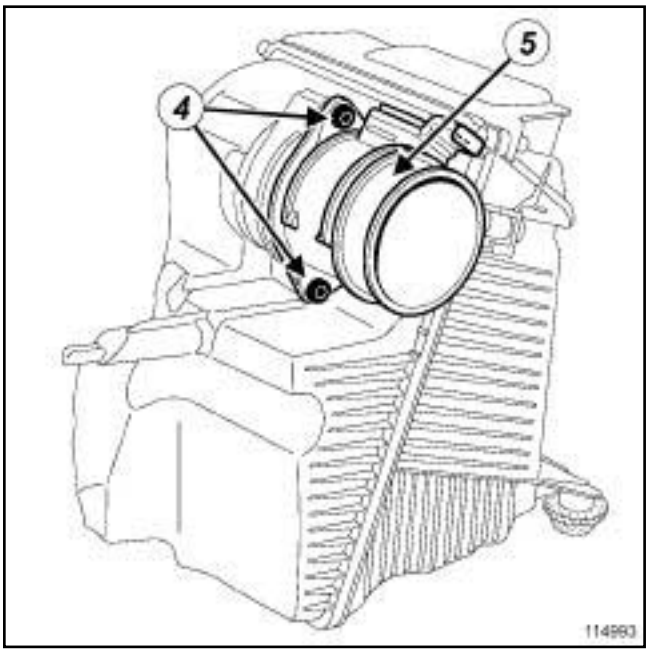

114993

❑ Remove:

- the air flowmeter bolts (**4**) on the air filter box,
- the air flowmeter (**5**) .

B84 or C84 or E84 or K84 or L84, and M9R

REFITTING

I - REFITTING OPERATION FOR PART CONCERNED

❏ Refit:

- the air flowmeter,
- the air flowmeter bolts.

> Note:
>
> Be sure not to damage the air flowmeter seal.
>
> Replace the seal if necessary.

❏ Torque tighten the **air flowmeter bolts on the air filter box (4 Nm)** using the **(Mot. 1608)**.

II - FINAL OPERATION.

❏ Refit the air filter box air outlet pipe.

❏ Torque tighten the **air filter box air outlet pipe clips (5.5 Nm)**.

❏ Clip:

- the oil vapour rebreathing pipe to the air filter unit air outlet pipe.
- the turbocharger pressure regulator solenoid valve hose from the air filter box outlet air pipe,

❏ Refit the turbocharger regulation solenoid valve onto the air filter unit.

❏ Connect:

- the air flowmeter connector,
- the battery (see **Battery: Removal - Refitting**) (MR 364, 80A, Battery).

K9K

Tightening torques ▽	
air filter box outlet air pipe clip	**5.5 Nm**

REMOVAL

I - REMOVAL PREPARATION OPERATION

❑ Remove the front engine cover.

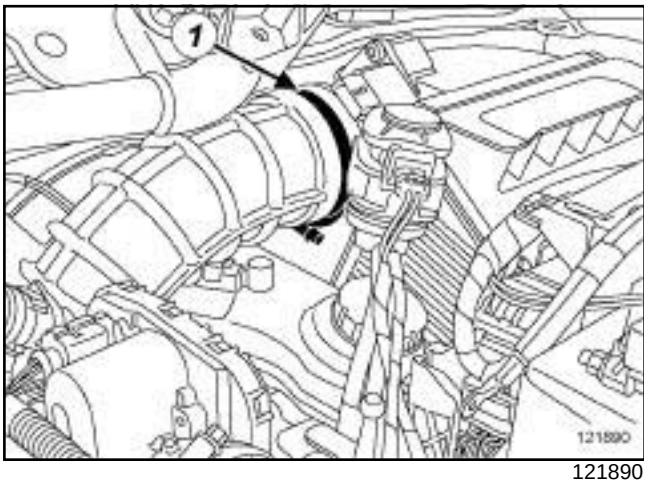

121890

❑ Disconnect the air flow sensor connector.

❑ Loosen the air filter box air outlet pipe clip (**1**) on the air flowmeter end.

❑ Disconnect the air filter unit air outlet pipe on the air flowmeter side.

❑ Move aside the air filter box air outlet pipe.

II - OPERATION FOR REMOVAL OF PART CONCERNED

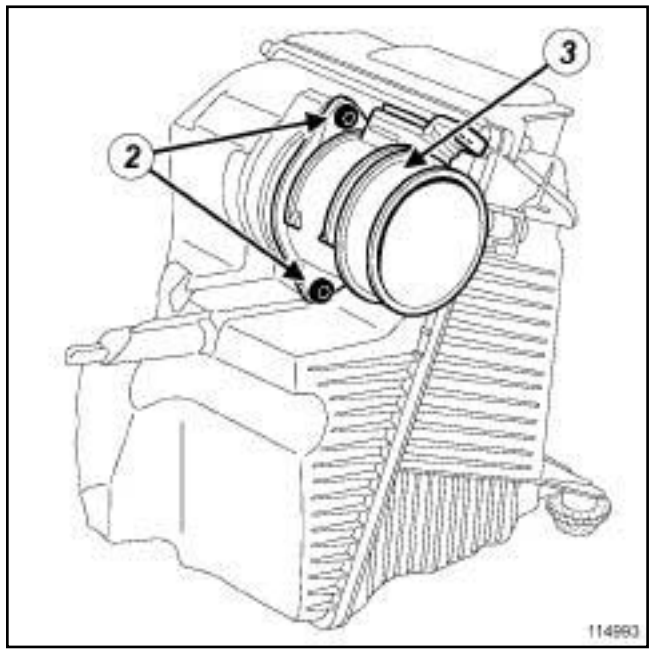

114993

❑ Remove:

- the bolts (**2**) from the air flowmeter,
- the air flowmeter (**3**) .

REFITTING

I - REFITTING OPERATION FOR PART CONCERNED

❑ Refit:

- the air flowmeter, fitted with a new seal,
- the air flowmeter bolts.

II - FINAL OPERATION.

❑ Fit the air filter unit air outlet pipe.

❑ Connect the air filter box outlet air pipe.

❑ Torque tighten the **air filter box outlet air pipe clip (5.5 Nm)**.

❑ Connect the air flowmeter connector.

❑ Refit the engine cover.

Engine damper flap: Removal - Refitting

B84 or C84 or G84 or S84, and F9Q, and 800 or 808

Tightening torques ▽	
engine damper flap bolts	**8 Nm**
intercooler outlet air pipe clip	**5.5 Nm**

REMOVAL

I - REMOVAL PREPARATION OPERATION

❑ Disconnect the battery (see **Battery: Removal - Refitting**) (MR 364, 80A, Battery).

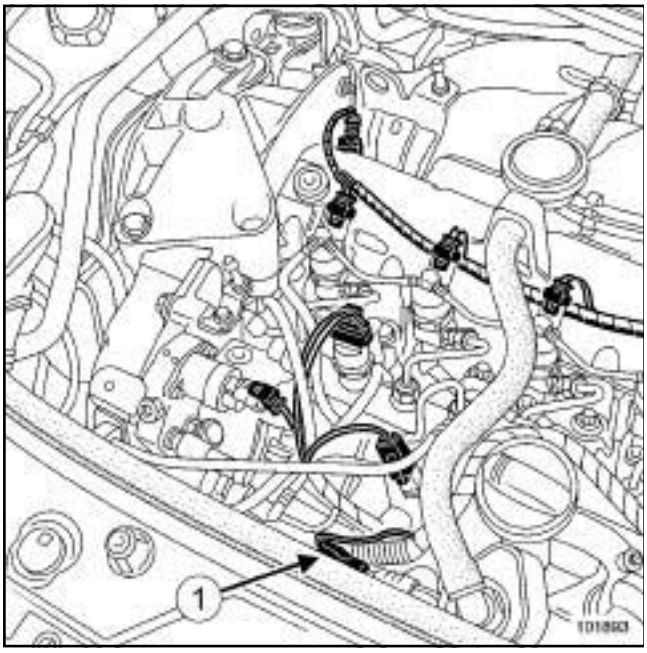

101893

❑ Disconnect the turbocharging pressure sensor connector (**1**) .

II - OPERATION FOR REMOVAL OF PART CONCERNED

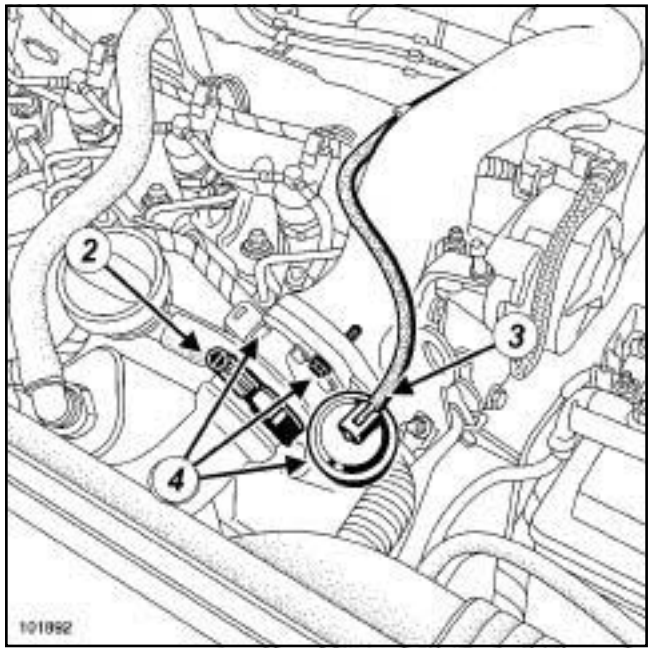

101892

❑ Loosen the clip (**2**) on the intercooler outlet air pipe, engine damper flap side.

❑ Disconnect the intercooler air outlet pipe, engine damper flap side.

❑ Move the intercooler outlet air pipe to one side.

❑ Disconnect the vacuum hose (**3**) from the engine damper flap diaphragm.

❑ Remove:

- the engine damper flap bolts (**4**) .

- the engine damper flap.

REFITTING

I - REFITTING PREPARATIONS OPERATION

❑ Clean the joint faces.

II - REFITTING OPERATION FOR PART CONCERNED

❑ Refit:

- the engine damper flap, with a new seal,

- the engine damper flap bolts.

❑ Torque tighten the **engine damper flap bolts (8 Nm)**.

B84 or C84 or G84 or S84, and F9Q, and 800 or 808

❑ Connect:

- the vacuum hose to the engine damper flap diaphragm,
- the intercooler outlet air pipe.

❑ Torque tighten the **intercooler outlet air pipe clip (5.5 Nm)**.

III - FINAL OPERATION.

❑ Connect:

- the turbocharger pressure sensor connector,
- the battery (see **Battery : Removal - Refitting**) (MR 364, 80A, Battery).

B84 or C84 or G84 or S84, and K9K, and 732 or 734

Tightening torques ▽	
damper valve mounting nuts	**12 Nm**

REMOVAL

I - REFITTING PREPARATIONS OPERATION

❏ Remove the engine covers.

❏ Disconnect the battery (see **Battery: Removal - Refitting**) (MR 364, 80A, Battery).

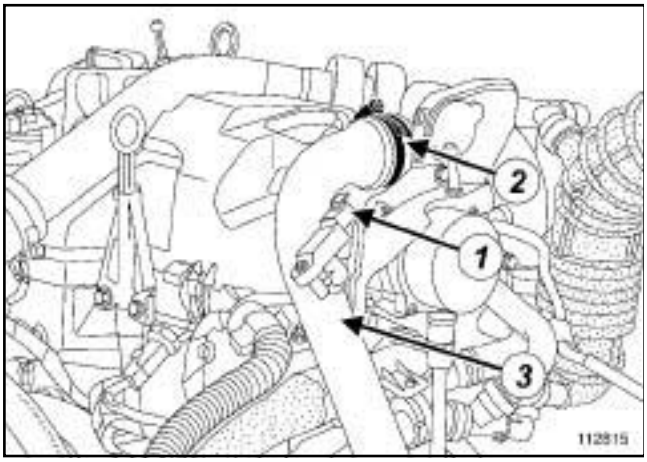

112815

❏ Disconnect the connector (**1**) from the inlet air pressure sensor.

❏ Loosen the clip (**2**) and move the air inlet manifold to one side (**3**) .

II - OPERATION FOR REMOVAL OF PART CONCERNED

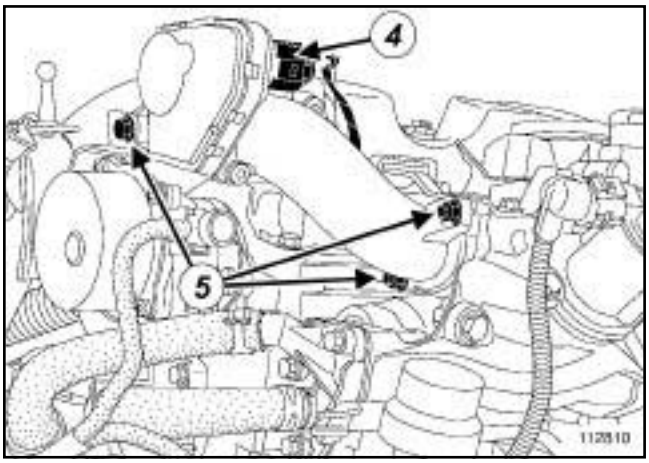

112810

❏ Disconnect:

- the damper valve connector (**4**) ,
- the vacuum pipe from the brake servo.

❏ Remove:

- the damper valve mounting nuts (**5**) ,
- the damper valve,
- the damper flap seal.

REFITTING

I - REFITTING OPERATION FOR PART CONCERNED

❏ Refit:

- the damper flap with a new seal,
- the damper flap mounting nuts.

❏ Torque tighten the **damper valve mounting nuts (12 Nm)**.

❏ Connect:

- the vacuum pipe from the brake servo,
- the connector to the damper flap.

II - FINAL OPERATION.

❏ Refit the air inlet duct onto the damper flap.

❏ Tighten the clip.

❏ Connect:

- the connector to the air inlet pressure sensor,
- the battery (see **Battery: Removal - Refitting**) (MR 364, 80A, Battery).

B84 or C84 or G84 or S84, and K9K, and 732 or 734

❑ Refit the engine covers.

Air inlet flap: Removal - Refitting

C84 or G84 or S84, and F9Q, and 803 or 804 or 816 or 818

Tightening torques ▽	
damper valve bolts	**8 N.m**

REMOVAL

❏ Remove the engine covers.

❏ Disconnect the battery (see **Battery: Removal - Refitting**) (MR 364, 80A, Battery).

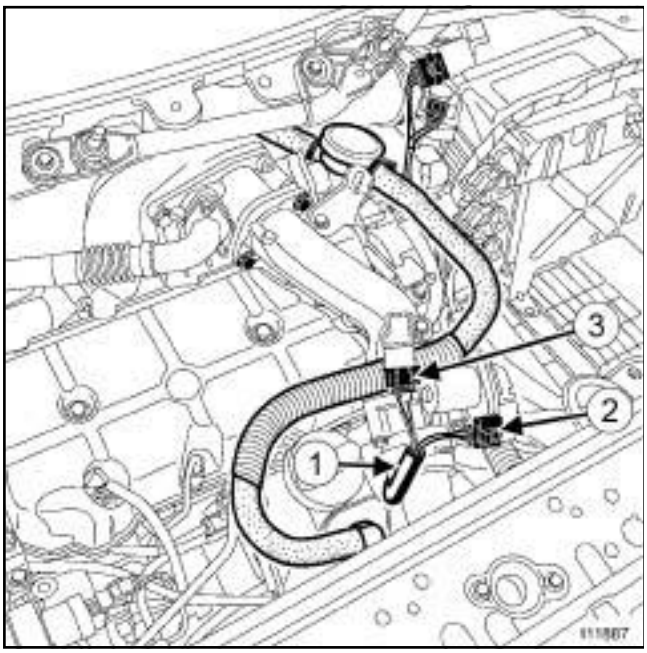

111887

❏ Undo the intercooler outlet air pipe clip (**1**) on the damper valve side.

❏ Undo the intercooler outlet air pipe hose on the damper valve side.

❏ Remove the intercooler outlet air pipe hose.

❏ Disconnect:

- the damper valve connector (**2**) ,
- the turbocharger pressure sensor connector (**3**) .

❏ Remove:

- the damper valve bolts,
- the damper valve.

REFITTING

❏ Proceed in the reverse order to removal.

❏ Replace the damper valve seal.

❏ Torque tighten the **damper valve bolts (8 N.m)**.

❏ Connect the battery (see **Battery : Removal - Refitting**) (MR 364, 80A, Battery).

❏ After replacing the damper valve, carry out the necessary programming (see **Fault finding - replacement of components**) (MR 366, 13B, Diesel injection).

B84 or C84 or E84 or K84 or L84, and M9R

Tightening torques ▽	
damper valve retaining strut bolts on the intake distributor	**12 Nm**
damper valve retaining strut bolts on the EGR solenoid valve	**12 Nm**
intercooler downstream duct clip on the inter-cooler	**5.5 Nm**
intercooler downstream duct clip on the damper valve	**5.5 Nm**
front end panel upper bolts	**21 Nm**
front end panel lower bolts	**44 Nm**

REMOVAL

I - REMOVAL PREPARATION OPERATION

❑ Position the vehicle on a two-post lift (see **Vehicle: Towing and lifting**) (MR 364, 02A, Lifting equipment).

❑ Disconnect the battery (see **Battery: Removal - Refitting**) (MR 364, 80A, Battery).

❑ Remove:

- the engine protector,
- the front bumper (see **Front bumper: Removal - Refitting**) (MR 365, 55A, Exterior protection).

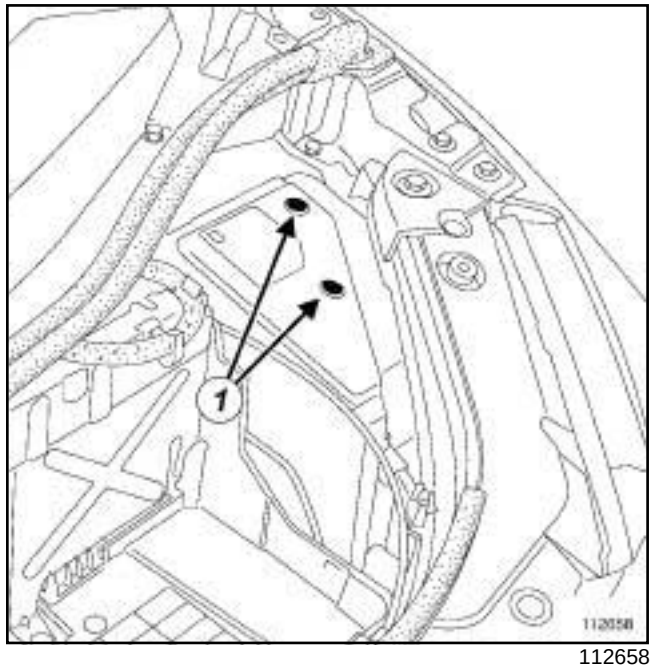

112658

❑ Remove:

- the engine accessories unit cover bolts (**1**) ,
- the engine accessories unit cover.

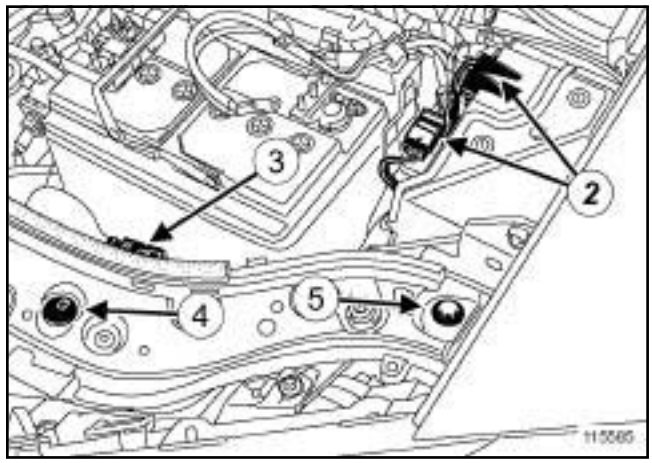

115585

❑ Disconnect the connectors (**2**) from the engine accessories unit.

❑ Unfasten the bonnet opening cable (**3**) .

❑ Remove:

- the clips (**4**) ,
- the front end panel upper bolts (**5**) .

❑ Disconnect the screen washer pipes.

B84 or C84 or E84 or K84 or L84, and M9R

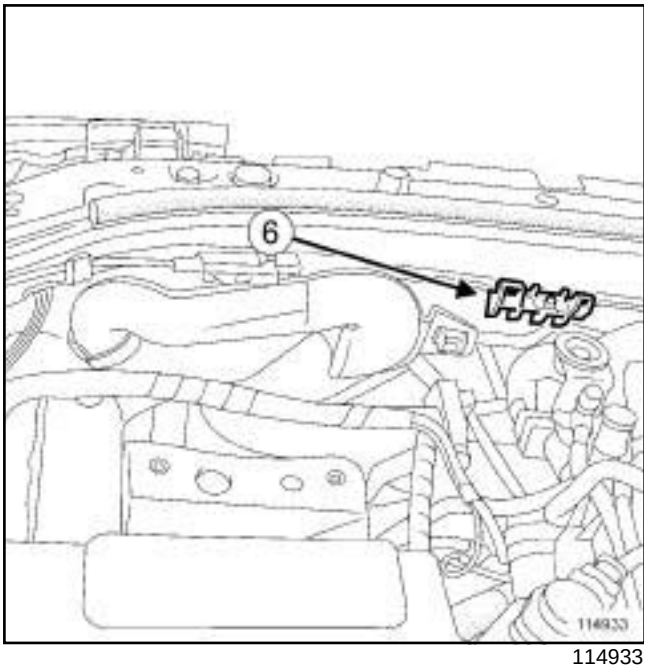

114933

❑ Unclip the air inlet (**6**) .

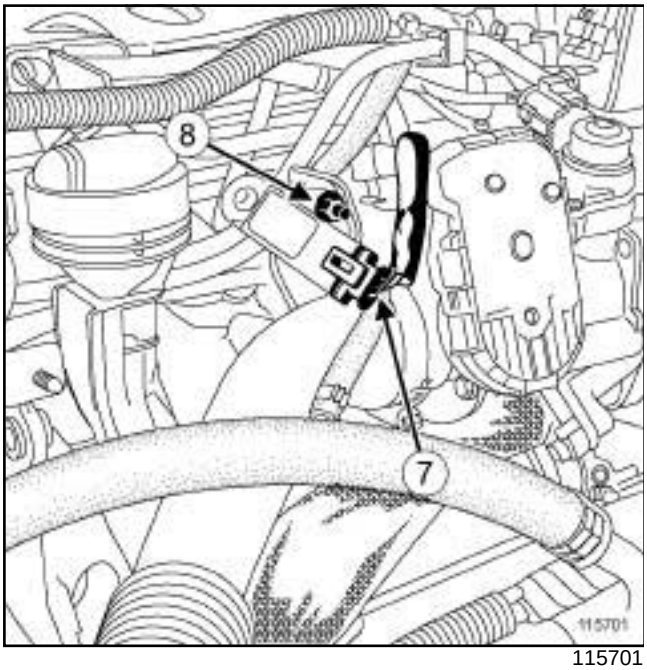

115701

❑ Disconnect the turbocharger pressure sensor connector (**7**) .

❑ Remove the nut (**8**) from the turbocharger pressure sensor on the damper valve strut.

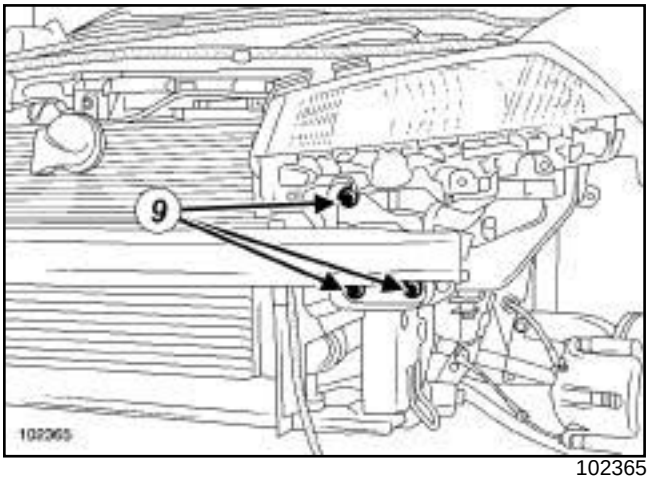

102365

❑ Remove:

- the front end panel lower bolts (**9**) ,
- the front end panel.

B84 or C84 or E84 or K84 or L84, and M9R

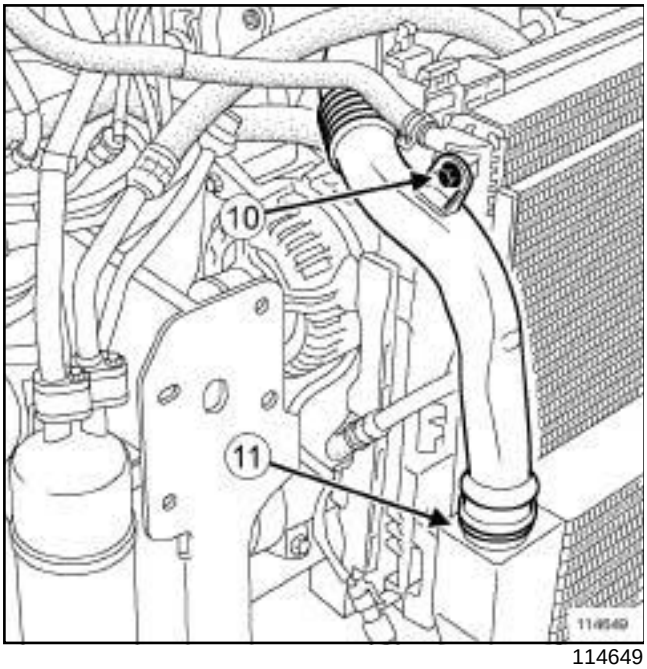

114649

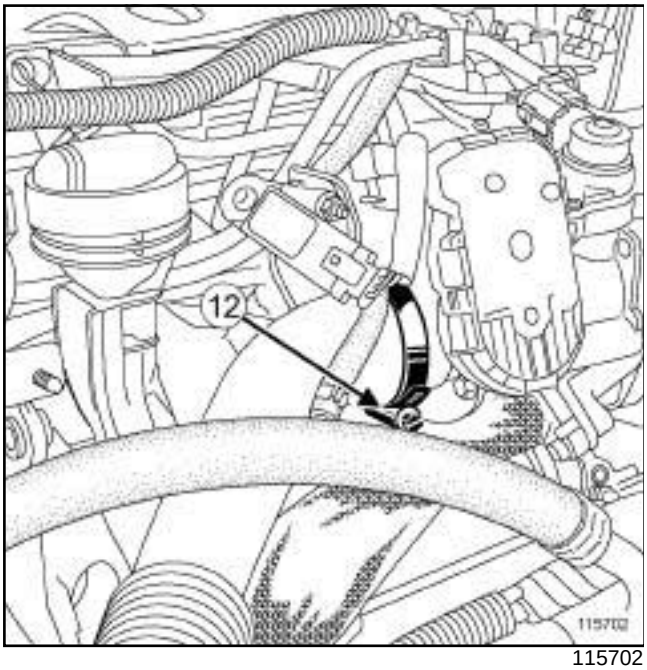

115702

❑ Remove the bolt (**10**) from the intercooler downstream duct on the cooling radiator.

❑ Undo:

- the clip (**11**) securing the intercooler downstream duct on the intercooler,
- the downstream intercooler duct clip (**12**) on the damper flap.

❑ Remove the downstream intercooler duct.

II - OPERATION FOR REMOVAL OF PART CONCERNED

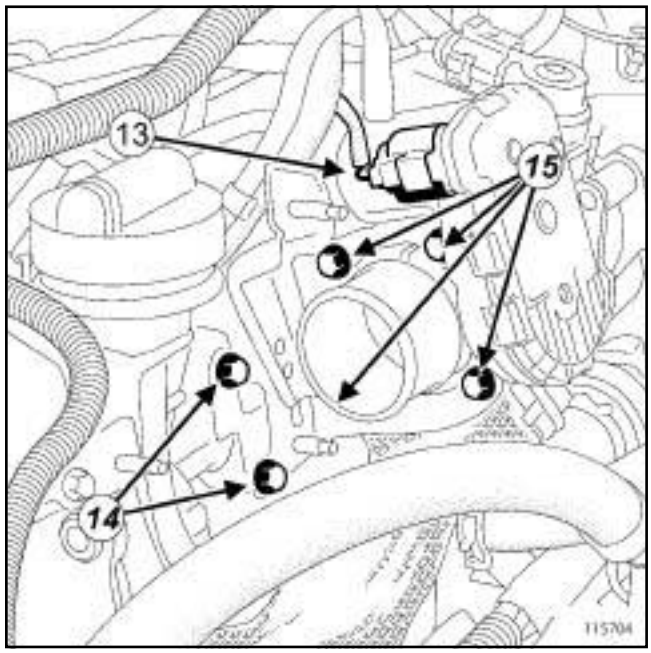

115704

❑ Disconnect the connector (**13**) from the damper valve.

❑ Remove:

- the damper valve retaining strut bolts (**14**) on the intake distributor,
- the bolts (**15**) from the damper flap retaining strut on the exhaust gas recirculation solenoid valve,
- the damper valve,
- the seal between the exhaust gas recirculation solenoid valve and the damper valve,

REFITTING

I - REFITTING PREPARATIONS OPERATION

❑ Replace the seal between the damper valve and the exhaust gas recirculation solenoid valve.

B84 or C84 or E84 or K84 or L84, and M9R

II - REFITTING OPERATION FOR PART CONCERNED

❏ Finger tighten until contact:

- the damper valve retaining strut bolts on the intake distributor,
- the damper flap retaining strut bolts on the exhaust gas recirculation solenoid valve.

❏ Torque tighten:

- the **damper valve retaining strut bolts on the intake distributor (12 Nm)**,
- the **damper valve retaining strut bolts on the EGR solenoid valve (12 Nm)**.

III - FINAL OPERATION.

❏ Refit:

- the intercooler downstream duct onto the intercooler and damper valve,
- the intercooler downstream duct bolt on the cooling radiator.

❏ Torque tighten:

- the **intercooler downstream duct clip on the intercooler (5.5 Nm)**,
- the **intercooler downstream duct clip on the damper valve (5.5 Nm)**.

❏ Refit:

- the front end panel,
- the front end panel bolts.

❏ Torque tighten:

- the **front end panel upper bolts (21 Nm)**,
- the **front end panel lower bolts (44 Nm)**.

❏ Clip:

- the air inlet scoop,
- the bonnet opening cable.

❏ Connect:

- the screen washer pipes,
- the engine accessories unit connectors,
- the injection computer connectors.

❏ Refit:

- the clips,
- the engine accessories unit cover bolts,
- the front bumper (see **Front bumper: Removal - Refitting**) (MR 365, 55A, Exterior protection).
- the engine undertray,
- the engine covers.

❏ Connect the battery (see **Battery : Removal - Refitting**) (MR 364, 80A, Battery).

❏ Reinitialise the programming following the scenario of command **SC036** when replacing or Removing - Refitting the damper valve (**Fault finding - Interpretation of commands**) (MR 366, 13B, Diesel injection) and (**Fault finding - Replacement of components**) (MR 366, 13B, Diesel injection).

K4J – K4M, and 764 or 768 or 788 or 856

Tightening torques ▽	
throttle valve bolts	**13 N.m**

REMOVAL

I - REMOVAL PREPARATION OPERATION

❑ Remove the engine covers.

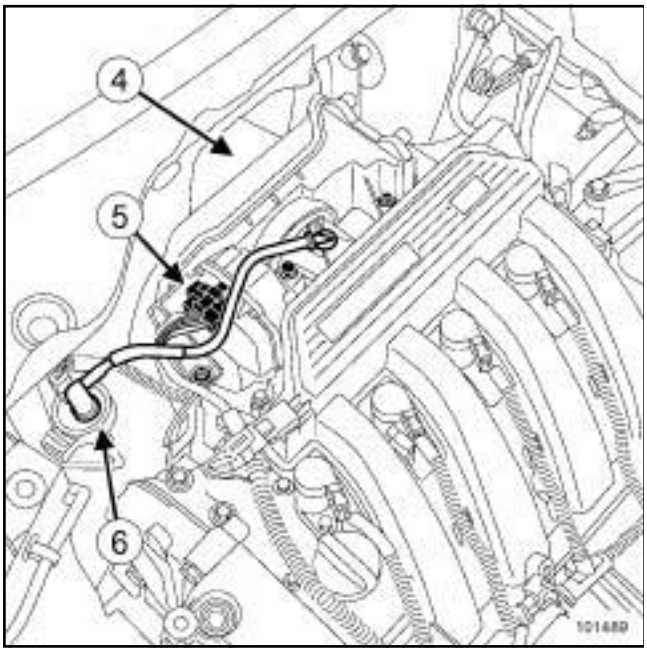

101489

❑ Remove the air filter unit (**4**) (see **12A**, **Fuel mixture**, **Air filter unit: Removal - Refitting**, page **12A-11**) .

❑ Disconnect:

- the throttle body connector (**5**) ,
- the fuel vapour recirculation pipe on the control solenoid valve (**6**) .

II - OPERATION FOR REMOVAL OF PART CONCERNED

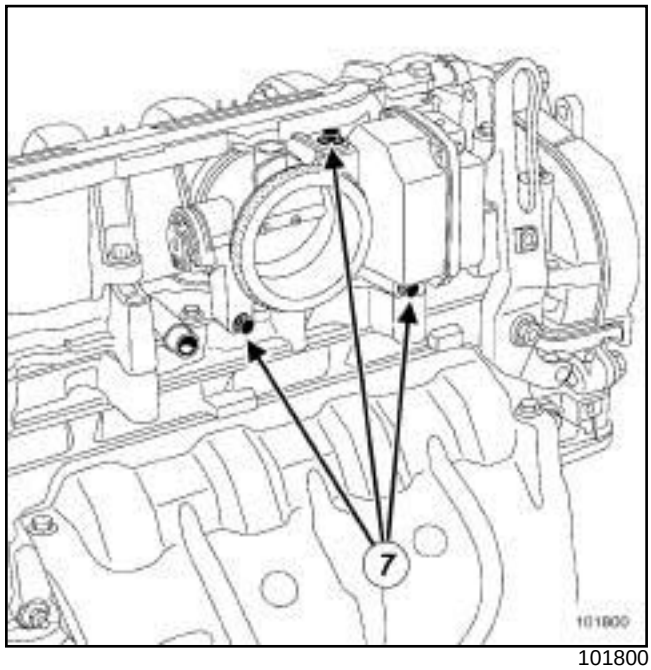

101800

❑ Remove:

- the throttle valve bolts (**7**) ,
- the throttle valve.

REFITTING

I - REFITTING OPERATION FOR PART CONCERNED

❑ **parts always to be replaced: Throttle valve seal (11,04,06,25)**

❑ Refit the throttle valve.

❑ Torque tighten the **throttle valve bolts (13 N.m)**.

II - FINAL OPERATION

❑ Connect:

- the fuel vapour recirculation pipe on the control solenoid valve,
- the throttle valve connector.

❑ Refit the air filter unit (see **12A**, **Fuel mixture**, **Air filter unit: Removal - Refitting**, page **12A-11**) .

❑ Reinitialise the programming of the stops (see **Fault finding - Configurations and programming**) (17B, Petrol injection).

F4R, and 770 or 771 – K4M, and 760 or 761 or 766 or 782 or 812 or 813

Tightening torques ▽	
throttle valve mounting bolts	**13 N.m**

REMOVAL

I - REMOVAL PREPARATION OPERATION

❑ Remove the engine covers.

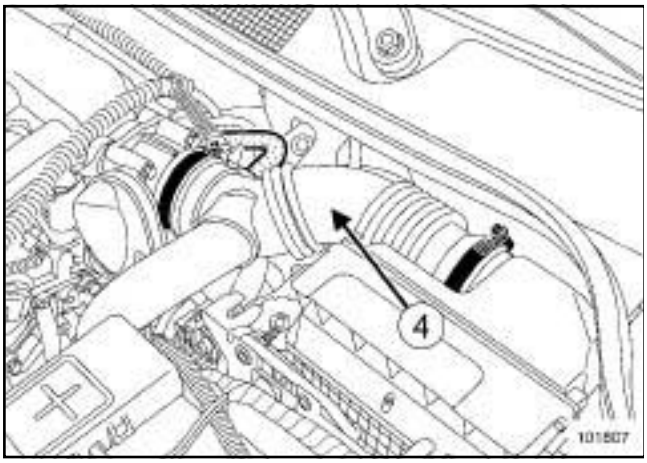

101807

❑ Remove the air duct (**4**) .

II - OPERATION FOR REMOVAL OF PART CONCERNED

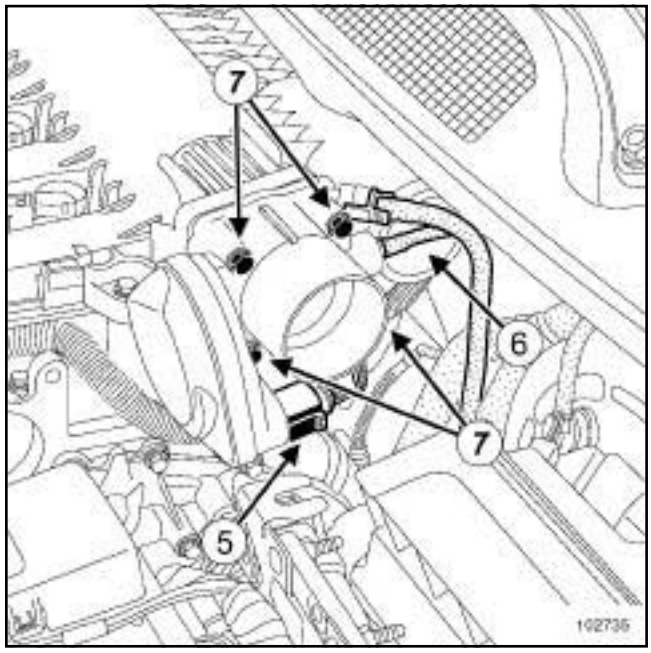

102735

❑ Disconnect:

- the throttle body connector (**5**) ,
- the fuel vapour recirculation pipe (**6**) from the control solenoid valve.

❑ Remove:

- the throttle valve mounting bolts (**7**) ,
- the throttle valve.

REFITTING

I - REFITTING OPERATION FOR PART CONCERNED

❑ **parts always to be replaced: Throttle valve seal (11,04,06,25)**

❑ Refit the throttle valve.

❑ Torque tighten the **throttle valve mounting bolts (13 N.m)** tightening the bolts evenly.

❑ Connect:

- the fuel vapour recirculation pipe on the control solenoid valve,
- the throttle valve connector.

II - FINAL OPERATION

❑ Refit the air duct.

F4R, and 770 or 771 – K4M, and 760 or 761 or 766 or 782 or 812 or 813

- Reinitialise the programming of the stops (see **Fault finding - Configurations and programming**) (17B, Petrol injection).

Throttle valve: Removal - Refitting

F4R, and 774 or 776

Essential equipment
diagnostic tool

Tightening torques ▽	
motorised throttle valve mounting bolts	**10 N.m**

REMOVAL

❑ Remove the engine covers.

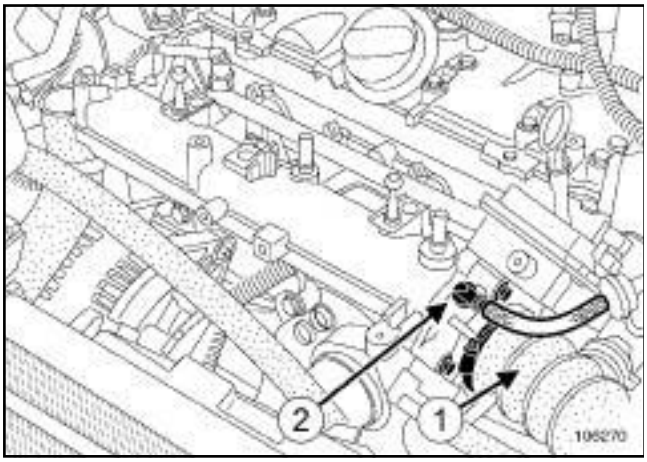

106270

❑ Remove the air duct (**1**) .

❑ Remove fuel vapour recirculation pipe (**2**) .

❑ Disconnect the motorised throttle valve connector.

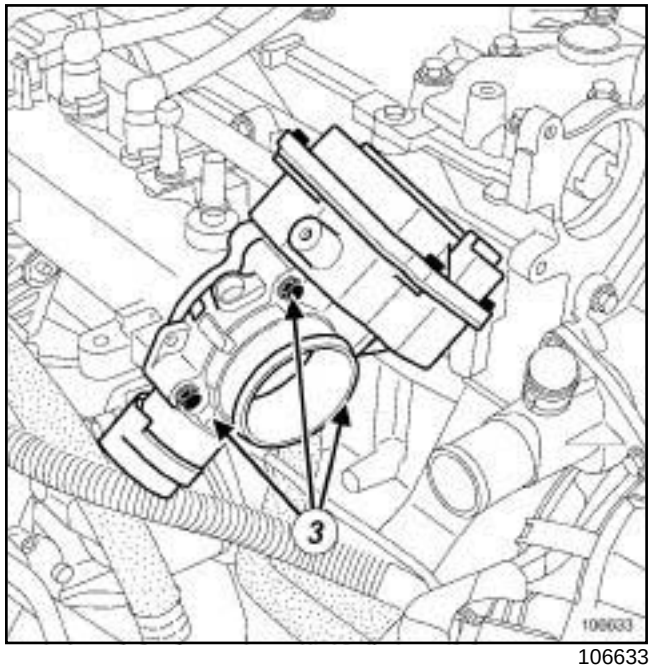

106633

❑ Remove:

- the motorised throttle valve mounting bolts (**3**) ,
- the motorised throttle valve.

REFITTING

❑ Always replace all of the seals.

❑ Proceed in the reverse order to removal.

❑ Torque tighten the **motorised throttle valve mounting bolts (10 N.m)**.

❑ If the throttle valve is replaced, reinitialise the programming of the stops with the **diagnostic tool** using the command **RZ005 « Apprentissages »** .

When the ignition is switched on, the throttle valve should go through a cycle to program the MIN and MAX throttle stop positions.

❑ Use the **diagnostic tool** to check that this programming has been carried out correctly **ET051 « Apprentissages butées papillon »** .

F4R or K4J or K4M

Essential equipment
compressed air nozzle

IMPORTANT
Wear leaktight gloves (Nitrile type) for this operation.

IMPORTANT
Always wear protective gear (gloves, goggles and breathing masks).

Note:
Be sure to work in a clean environment so as not to allow any contamination of the throttle valve.

CLEANING

I - CLEANING PREPARATION OPERATION

❑ Remove the throttle valve (see **12A**, **Fuel mixture**, **Throttle valve: Removal - Refitting**, page **12A-40**) .

II - CLEANING THE PART CONCERNED

❑

Note:
The **CARBURETTOR CLEANING** product damages the seals.

❑ Remove the seal(s) of the throttle valve.

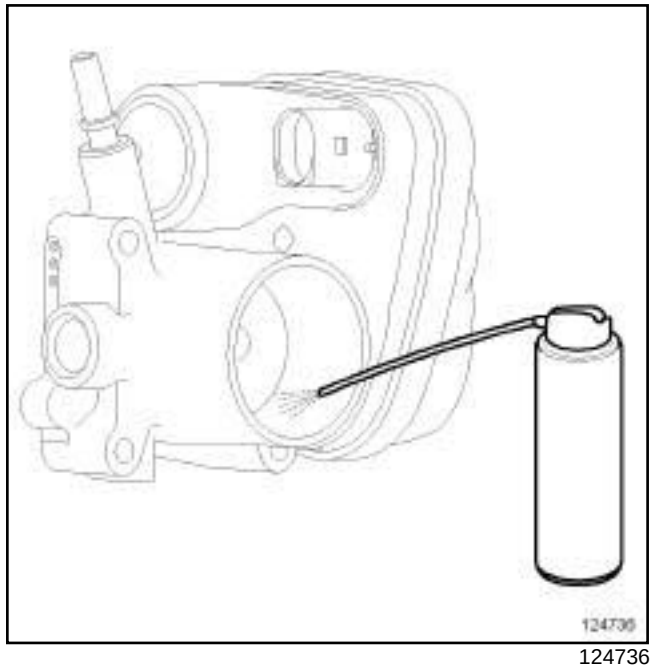

124736

❑ Hold the throttle valve flap open manually.

Note:
Do not spray any cleaning product onto the outside of the cylinder, inside the spring housing or onto the connector.

❑ Spray **CARBURETTOR CLEANER** (see **Vehicle: Parts and ingredients for the repairwork**) (04B, Consumables - Products) into the air vent until all traces of clogging have disappeared.

F4R or K4J or K4M

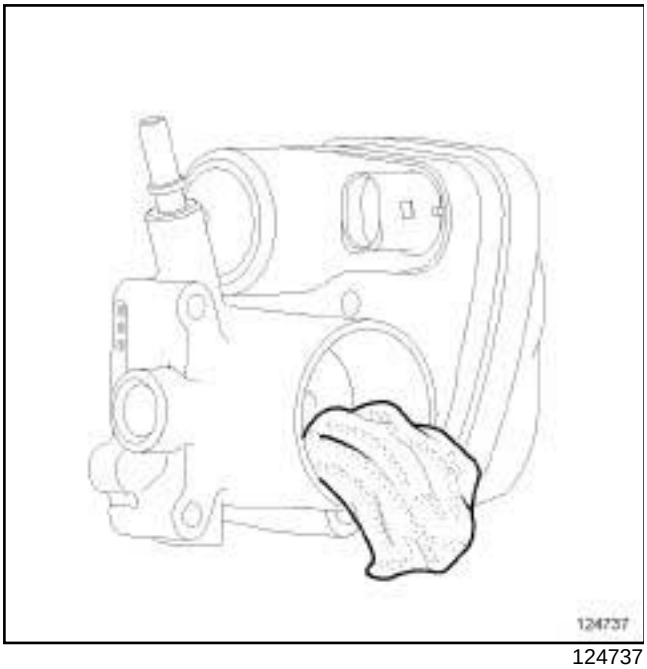

124737

❑ Remove the residues of **CARBURETTOR CLEANER** and the residual dirt using a **LINT-FREE CLOTH** (see **Vehicle: Parts and ingredients for the repairwork**) (04B, Consumables - Products).

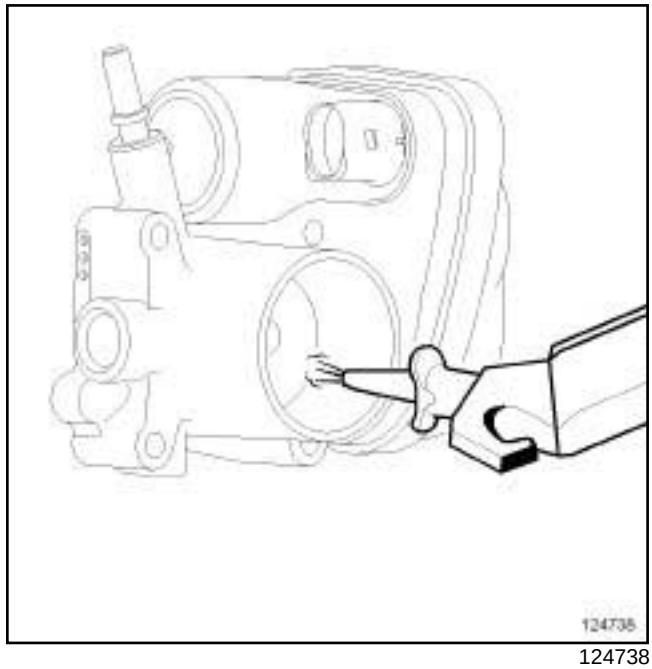

124738

❑ Use a **compressed air nozzle** to blast the throttle valve edges and the air vent.

parts always to be replaced: Throttle valve seal (11,04,06,25)

Note:

If the throttle valve is dropped or receives any other impact, it will need to be replaced.

III - FINAL OPERATION

❑ Refit the throttle valve (see **12A**, **Fuel mixture**, **Throttle valve: Removal - Refitting**, page **12A-40**) .

Air inlet duct: Removal - Refitting

B84 or C84 or G84 or S84, and F9Q, and 800 or 808

Tightening torques ▽	
inlet duct mounting bolts	**8 Nm**
inlet duct nut	**21 Nm**
battery cover mounting bolts	**4 Nm**

REMOVAL

❑ Remove the engine covers.

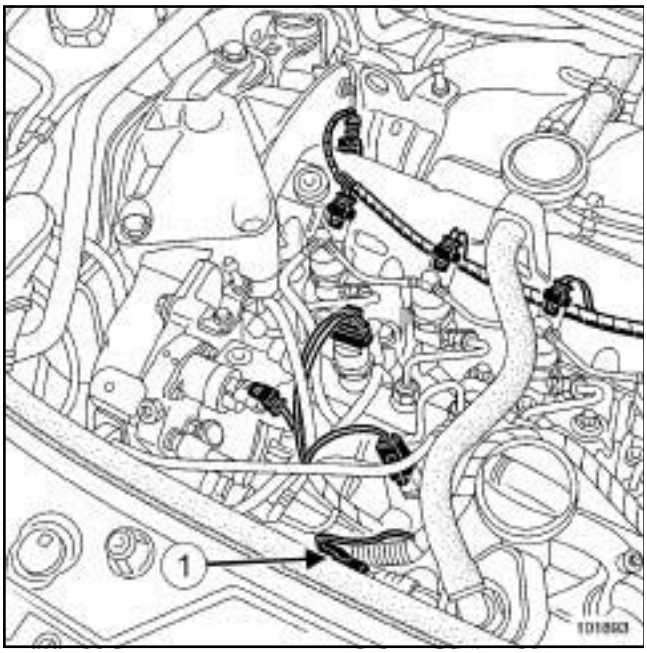

101893

❑ Disconnect:

- the battery (see **Battery : Removal - Refitting**) (MR 364, 80A, Battery),
- the turbocharger pressure sensor (**1**) .

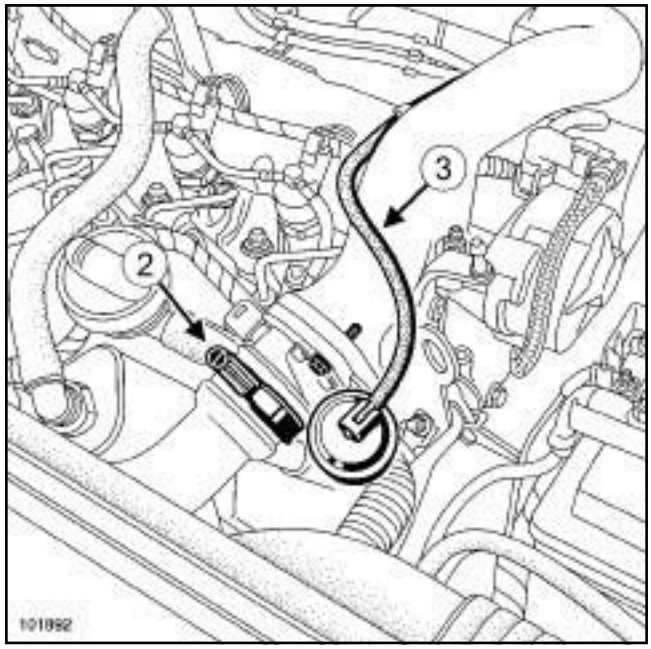

101892

❑ Loosen the clip (**2**) .

❑ Disconnect the air inlet hose.

❑ Move aside the air inlet hose.

❑ Disconnect the vacuum hose (**3**) from the diaphragm.

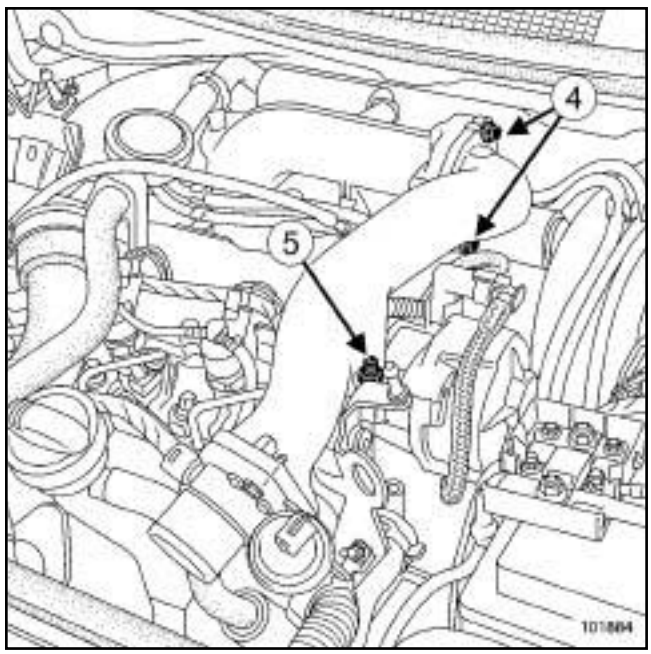

101884

❑ Remove:

- the inlet duct mounting bolts (**4**) ,
- the inlet duct mounting nut (**5**) ,
- the air inlet duct.

B84 or C84 or G84 or S84, and F9Q, and 800 or 808

REFITTING

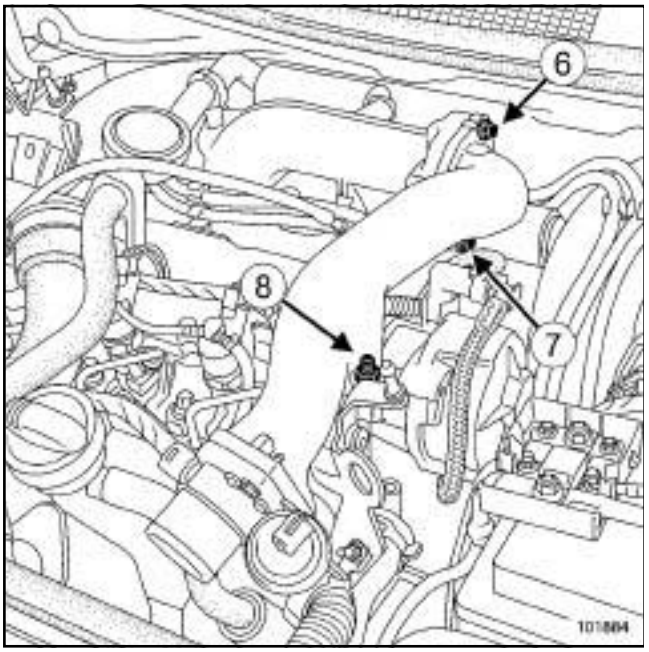

101884

- ❑ Replace the seal.
- ❑ Refit the inlet duct.
- ❑ Torque tighten and in order:
  - the **inlet duct mounting bolts (8 Nm)**,
  - the **inlet duct nut (21 Nm)**.
- ❑ Proceed in the reverse order to removal.
- ❑ Connect the battery (see **Battery : Removal - Refitting**) (MR 364, 80A, Battery).
- ❑ Torque tighten the **battery cover mounting bolts (4 Nm)**.

Air inlet duct: Removal - Refitting

B84 or C84 or G84 or S84, and F9Q, and 803 or 804 or 816 or 818

Tightening torques ▽	
inlet duct bolts	**25 Nm**
inlet duct nut	**21 Nm**

REMOVAL

❑ Remove the engine covers.

❑ Disconnect the battery (see **Battery: Removal - Refitting**) (MR 364, 80A, Battery).

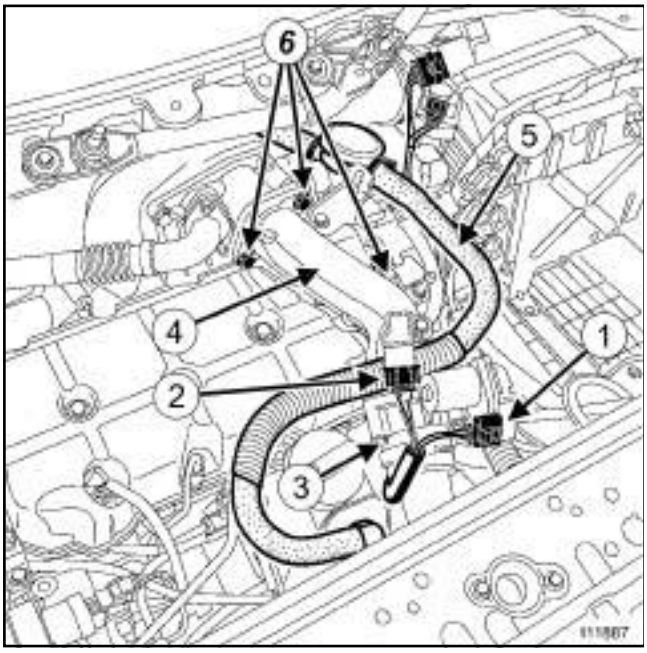

111887

❑ Disconnect:

- the damper valve connector (**1**) ,
- the pressure sensor connector (**2**) ,
- the air duct (**3**) from the inlet duct (**4**) ,
- the oil vapour rebreather pipe (**5**) :
  - on the oil decanter,
  - on the turbocharger upstream air duct.

❑ Remove:

- the inlet duct mountings (**6**) ,
- the air inlet duct.

REFITTING

❑ Replace the seals.

❑ Refit the inlet duct.

❑ Torque tighten and in order:

- the **inlet duct bolts (25 Nm)**,
- the **inlet duct nut (21 Nm)**.

❑ To refit, proceed in the reverse order of removal.

❑ Connect the battery (see **Battery : Removal - Refitting**) (MR 364, 80A, Battery).

Inlet manifold: Removal - Refitting

B84 or C84 or G84 or S84, and K4J, and 730 or 732 or 740 – B84 or C84 or G84 or S84, and K4M, and 764 or 768 or 788 or 856

Tightening torques ▽	
intake distributor bolts	**9 N.m**
throttle valve bolts	**13 N.m**
air unit bolts	**9 N.m**

REMOVAL

❏ Disconnect the battery (see **Battery: Removal - Refitting**) (MR 364, 80A, Battery).

❏ Remove:

- the air filter unit (see **12A**, **Fuel mixture**, **Air filter: Removal - Refitting**, page **12A-10**) ,
- the throttle valve (see **12A**, **Fuel mixture**, **Throttle valve: Removal - Refitting**, page **12A-40**) .

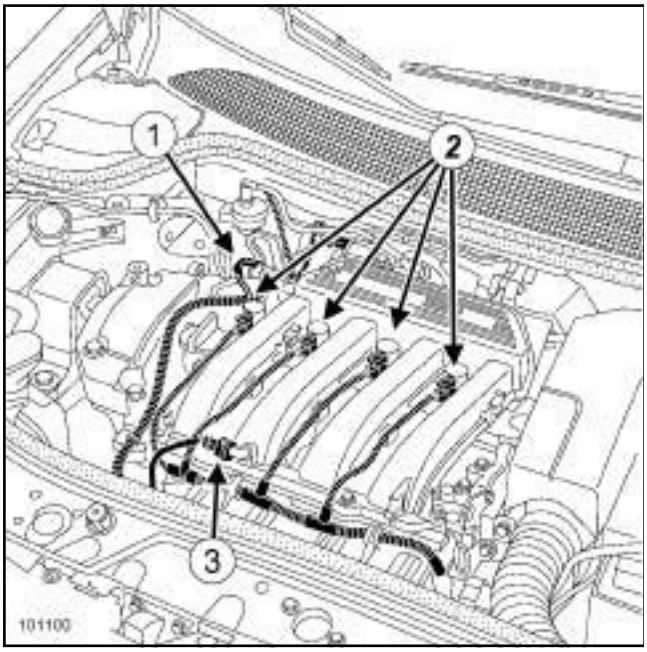

101100

❏ Disconnect:

- manifold pressure sensor (**1**) ,
- ignition coils (**2**) ,
- air temperature sensor (**3**) .

❏ Move the wiring harness to one side.

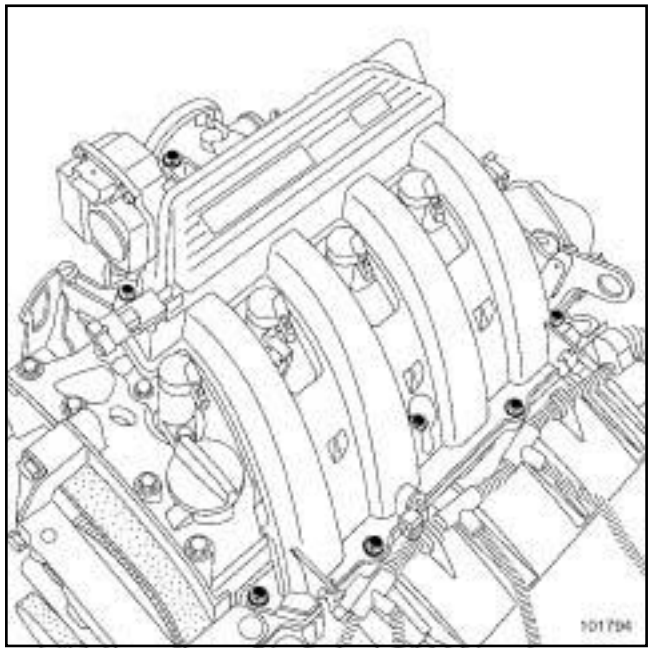

101794

❏ Remove:

- the intake distributor bolts,
- the intake distributor.

REFITTING

❏ Always replace all of the seals with new ones.

❏ Proceed in the reverse order to removal.

B84 or C84 or G84 or S84, and K4J, and 730 or 732 or 740 – B84 or C84 or G84 or S84, and K4M, and 764 or 768 or 788 or 856

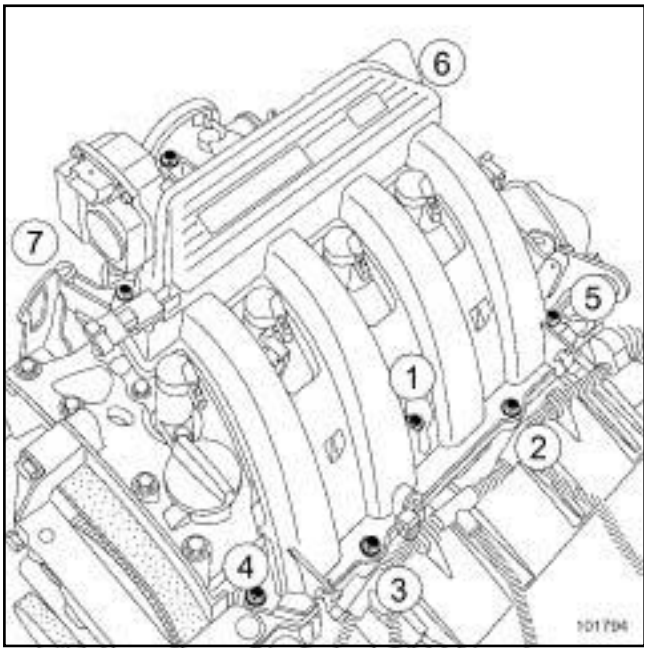

101794

- Torque tighten in order the **intake distributor bolts (9 N.m)**.
- Torque tighten:
  - the **throttle valve bolts (13 N.m)**,
  - the **air unit bolts (9 N.m)**.
- Connect the battery (see **Battery : Removal - Refitting**) (MR 364, 80A, Battery).

Inlet manifold: Removal - Refitting

B84 or C84 or G84 or S84, and F4R, and 770 or 771 – B84 or C84 or G84 or S84, and K4M, and 760 or 761 or 766 or 812 or 813

Tightening torques ▽	
intake distributor bolts	**9 Nm**
motorised throttle valve bolts	**13 Nm**

REMOVAL

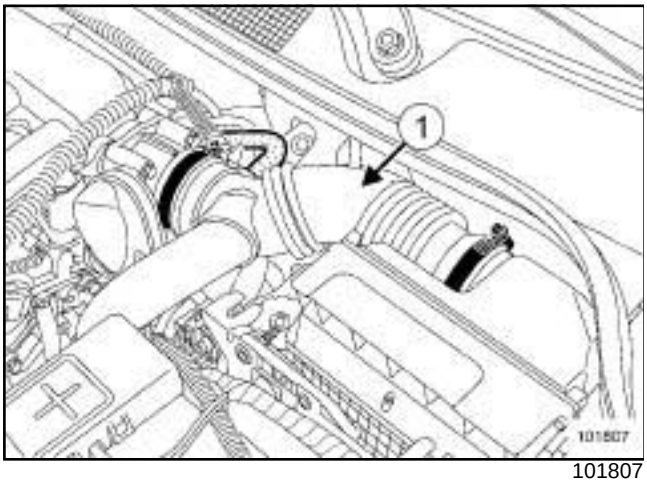

101807

❑ Disconnect the battery (see **Battery: Removal - Refitting**) (MR 364, 80A, Battery).

❑ Remove:

- the engine covers,
- air duct (**1**) .

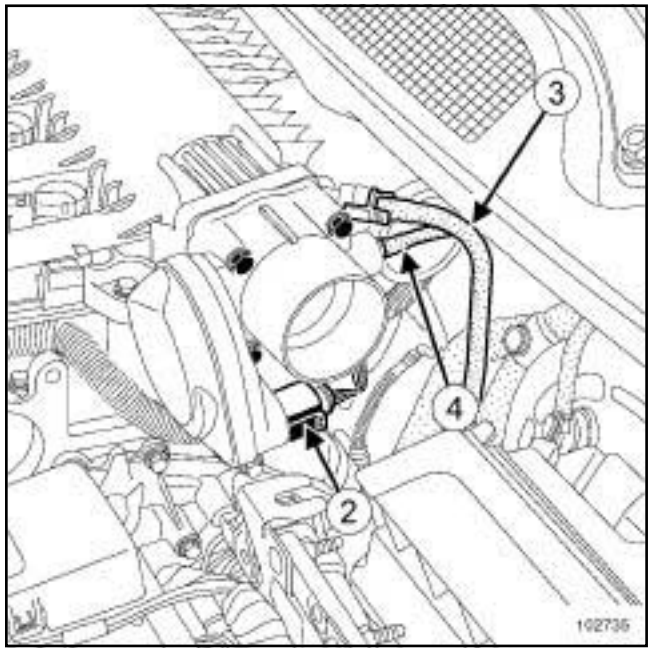

102735

❑ Disconnect:

- throttle valve connector (**2**) ,
- the brake servo vacuum pipe (**3**) on the intake distributor.

WARNING

Do not damage the vacuum outlet on the intake distributor. If it is damaged, the inlet manifold will have to be replaced.

❑ Disconnect the petrol vapour recirculation pipe (**4**) on the throttle valve.

B84 or C84 or G84 or S84, and F4R, and 770 or 771 – B84 or C84 or G84 or S84, and K4M, and 760 or 761 or 766 or 812 or 813

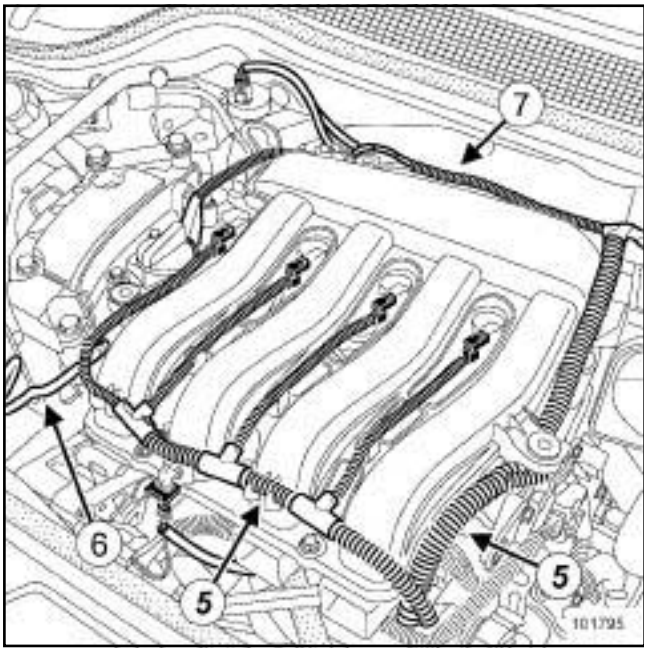

101795

❑ Disconnect electrical wiring harness (**5**) .

❑ Pull the electric wiring harness to one side.

❑ Disconnect the fuel supply pipe (**6**) from the injector rail.

IMPORTANT

During this operation, be sure to:

- refrain from smoking or bringing red hot objects close to the working area,
- be careful of fuel splashes when disconnecting the union.

IMPORTANT

Always wear protective gear (gloves, goggles and breathing masks).

❑ Unclip the petrol vapour recirculation pipe (**7**) from the intake distributor.

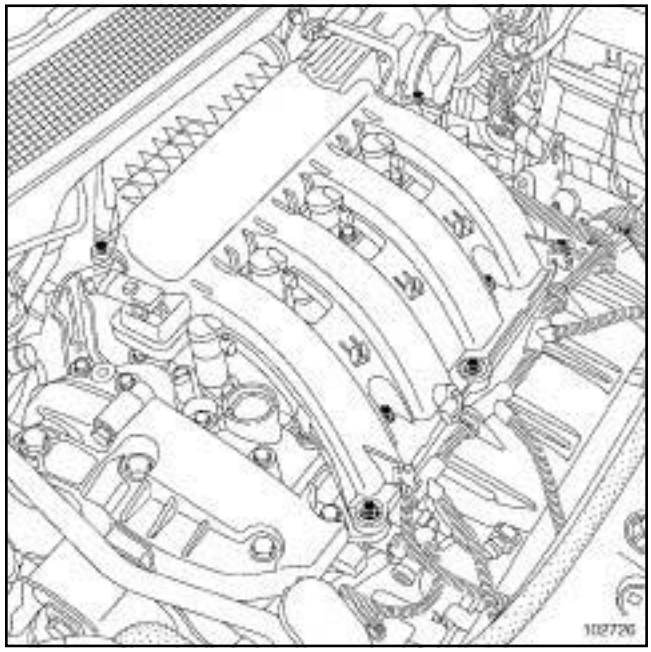

102726

❑ Remove the intake distributor bolts.

ON THE WORKBENCH

❑ Remove the throttle valve.

REFITTING

❑ Always replace all of the seals with new ones.

❑ Proceed in the reverse order to removal.

B84 or C84 or G84 or S84, and F4R, and 770 or 771 – B84 or C84 or G84 or S84, and K4M, and 760 or 761 or 766 or 812 or 813

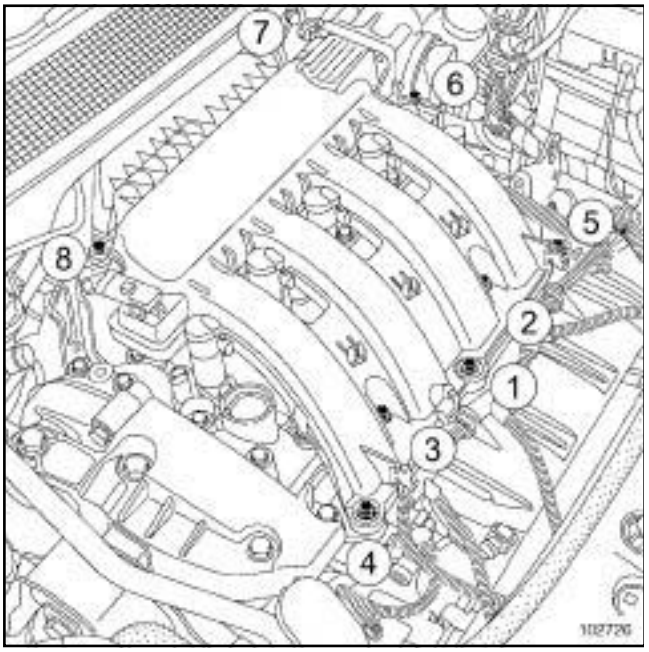

102726

- Torque tighten in order the **intake distributor bolts (9 Nm)**.
- Torque tighten the **motorised throttle valve bolts (13 Nm)**, tightening the bolts evenly.
- Connect the battery (see **Battery : Removal - Refitting**) (MR 364, 80A, Battery).

B84 or C84 or G84 or S84, and F4R, and 776

Tightening torques ▽	
intake distributor mounting bolts	**21 Nm**
motorised throttle valve mounting bolts	**21 Nm**
battery cover mounting bolts	**4 Nm**

REMOVAL

❑ Disconnect the battery (see **Battery: Removal - Refitting**) (MR 364, 80A, Battery).

❑ Remove the engine covers.

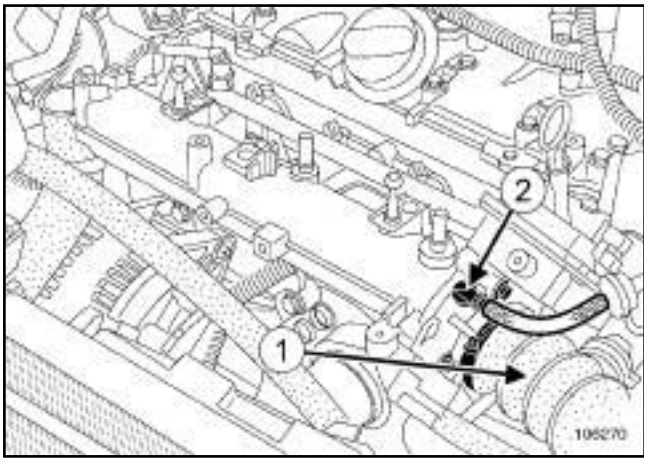

106270

❑ Remove air duct ***(1)*** .

❑ Remove petrol vapour rebreathing pipe ***(2)*** .

❑ Disconnect the motorised throttle valve connector.

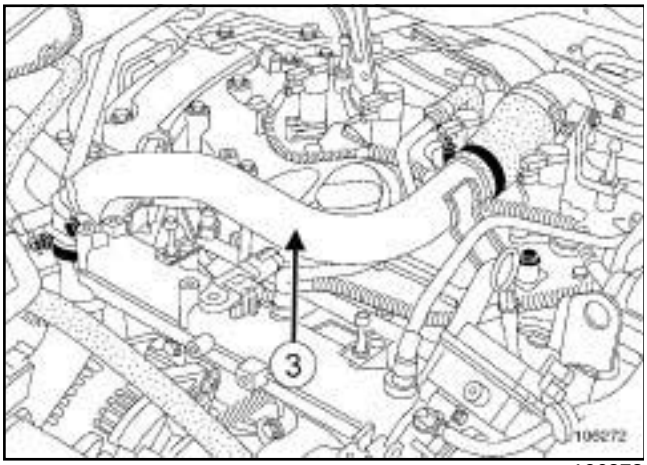

106272

❑ Remove the air pipe ***(3)*** between the turbocharger and intercooler.

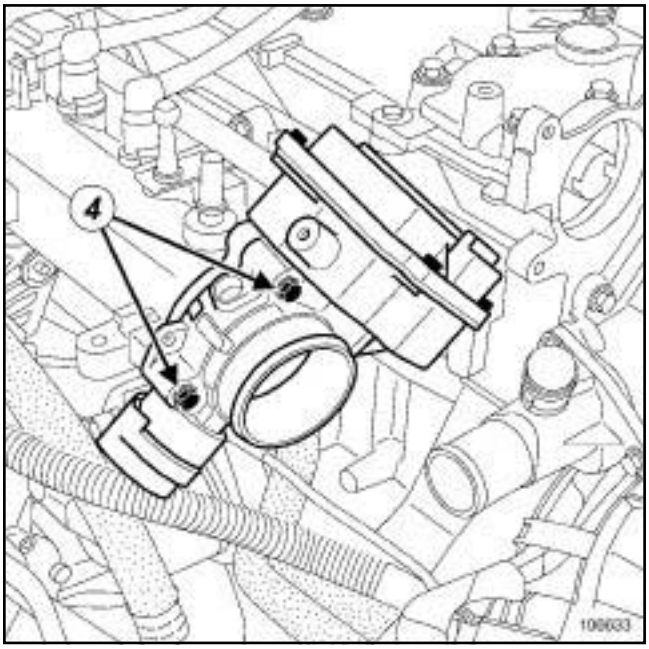

106633

❑ Remove:

- the motorised throttle valve mounting bolts ***(4)*** ,
- the motorised throttle valve.

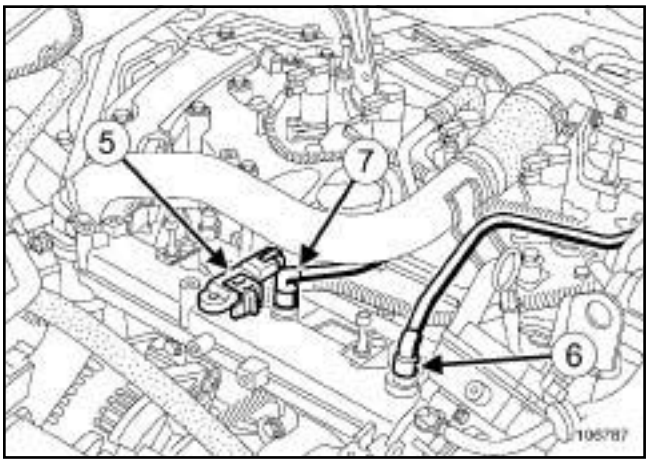

106787

❑ Disconnect:

- the turbocharger pressure sensor connector ***(5)*** ,
- the brake servo vacuum pipe ***(6)*** ,
- the oil vapour recirculation pipe ***(7)*** .

B84 or C84 or G84 or S84, and F4R, and 776

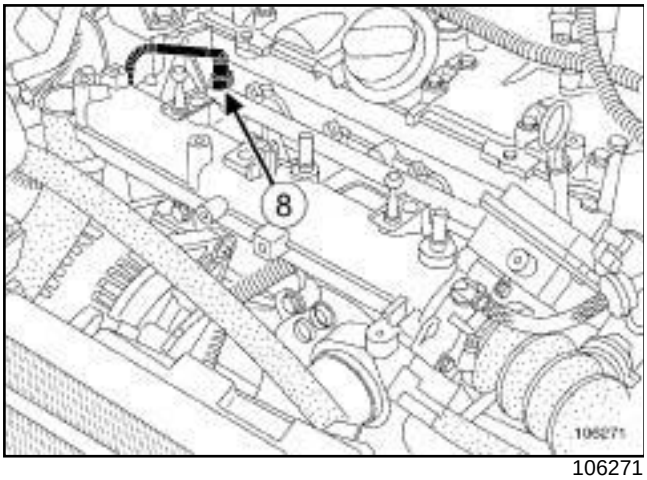

106271

❑ Disconnect:

- the injector rail fuel supply pipe ***(8)*** ,
- the injector connectors.

IMPORTANT

During this operation, it is essential to:

- refrain from smoking or bringing red hot objects close to the working area,
- expect fuel splashes when disconnecting the supply union,
- protect sensitive areas from fuel outflow.

IMPORTANT

Wear gloves during the operation.

❑ Pull the electric wiring harness to one side.

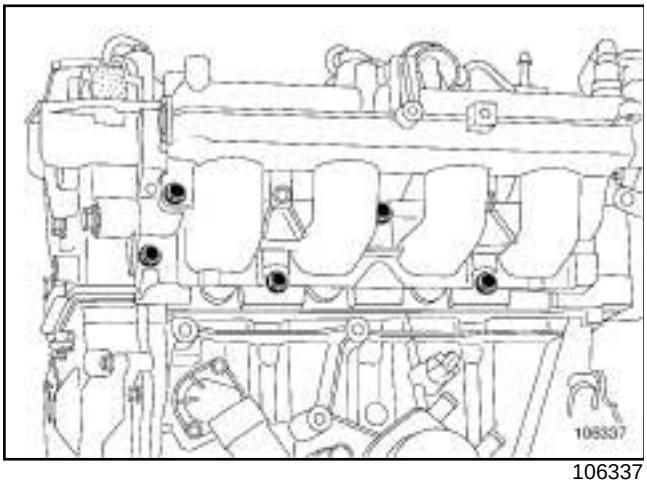

106337

❑ Remove the intake distributor bolts.

REFITTING

❑ Be sure to replace all the seals with new ones when they are removed.

❑ Proceed in the reverse order to removal

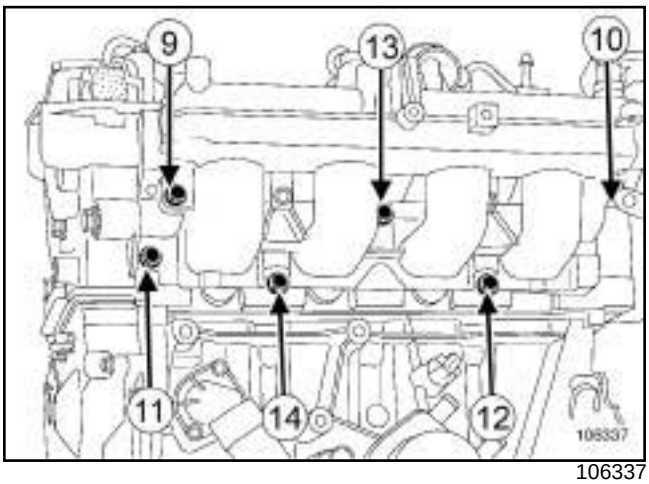

106337

❑ Tighten in order and to torque the **intake distributor mounting bolts (21 Nm)**.

❑ Torque tighten the **motorised throttle valve mounting bolts (21 Nm)**.

❑ Connect the battery (see **Battery : Removal - Refitting**) (MR 364, 80A, Battery).

❑ Torque tighten the **battery cover mounting bolts (4 Nm)**.

B84 or C84, and F4R, and 774

Tightening torques ▽	
intake distributor bolts	**21 Nm**
motorised throttle valve bolts	**10 Nm**
battery cover bolts	**4 Nm**

REMOVAL

❑ Disconnect the battery (see **Battery: Removal - Refitting**) (MR 364, 80A, Battery).

❑ Remove the engine covers.

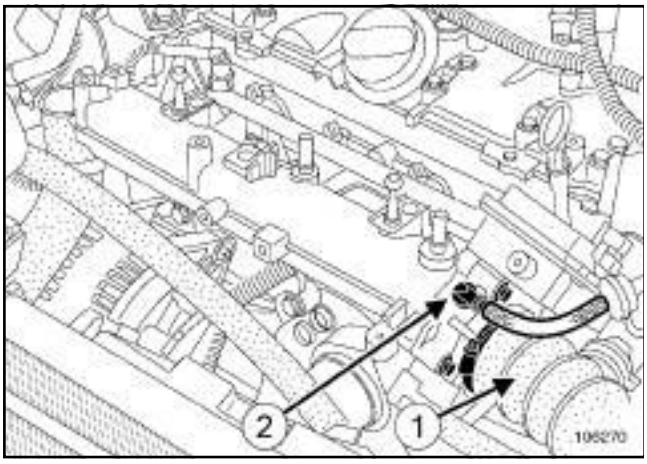

106270

❑ Move aside the air duct (**1**) .

❑ Remove fuel vapour recirculation pipe (**2**) .

❑ Disconnect the motorised throttle valve connector.

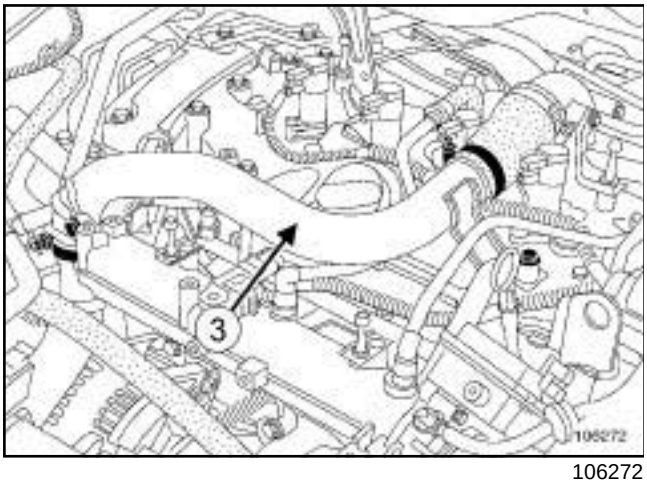

106272

❑ Remove the air pipe (**3**) from the intercooler-turbo-charger.

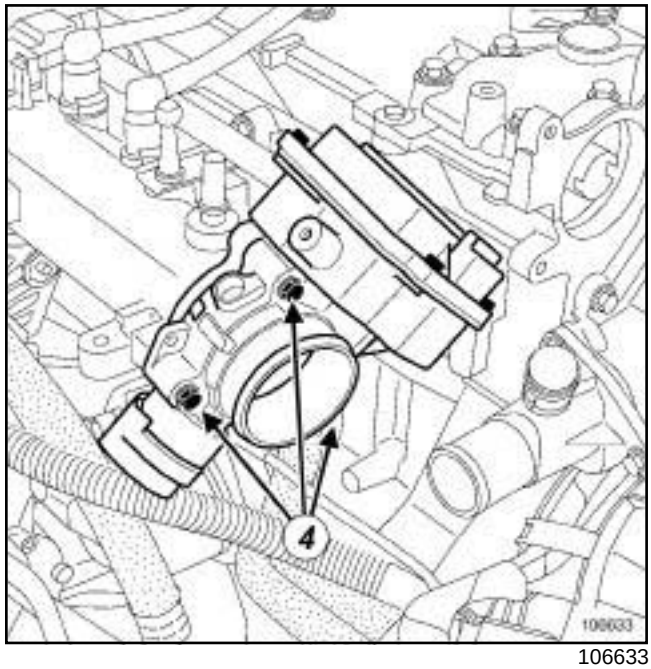

106633

❑ Remove:

- the motorised throttle valve mounting bolts,
- the motorised throttle valve.

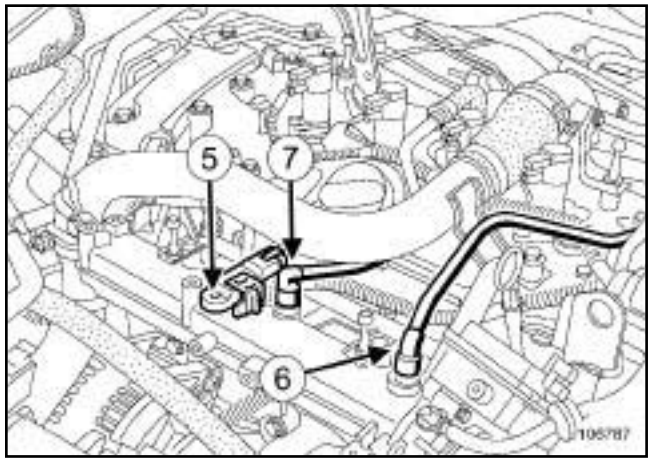

106787

❑ Disconnect:

- the turbocharging pressure sensor connector (**5**) ,
- the vacuum pipe from the brake servo (**6**) ,
- the oil vapour recirculation pipe (**7**) .

B84 or C84, and F4R, and 774

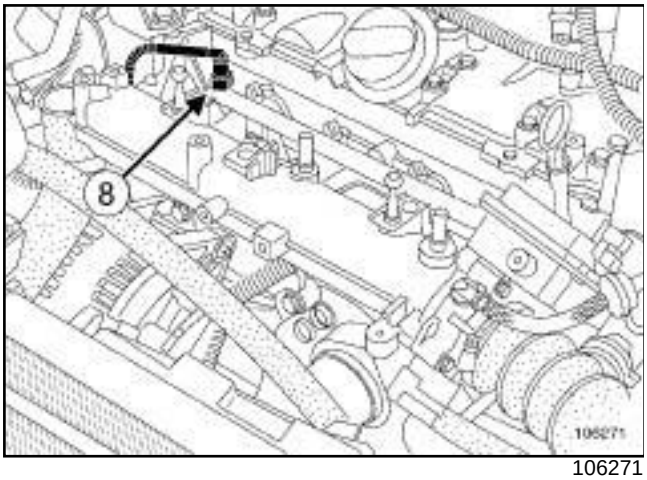

106271

❑ Disconnect the fuel supply pipe (**8**) from the injector rail.

IMPORTANT

During this operation, be sure to:

- refrain from smoking or bringing red hot objects close to the working area,
- beware of fuel splashes when disconnecting the union,
- protect sensitive areas from fuel outflow.

IMPORTANT
Wear gloves during this operation.

❑ Disconnect the injector connectors.

❑ Pull the electric wiring harness to one side.

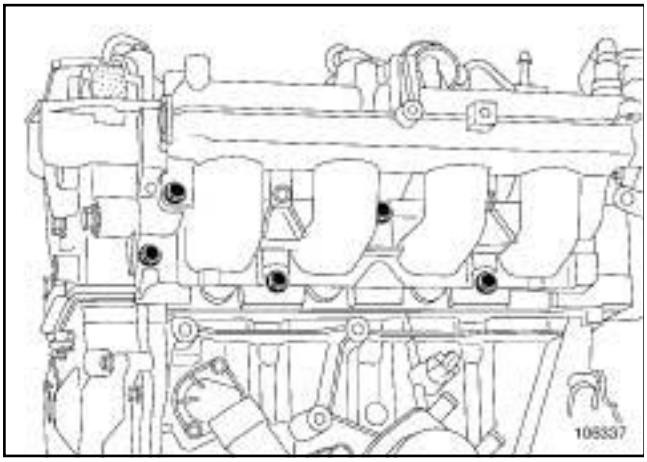

106337

❑ Remove the six inlet manifold bolts.

REFITTING

❑ Always replace all of the seals with new ones.

❑ Proceed in the reverse order to removal.

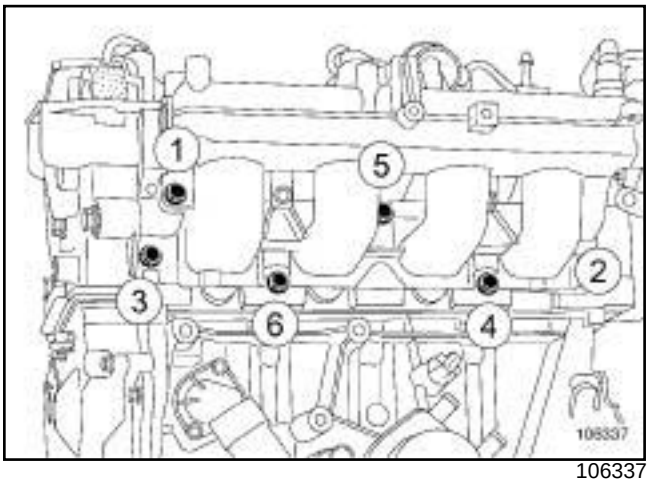

106337

❑ Tighten to torque and in order the **intake distributor bolts (21 Nm)**.

❑ Torque tighten the **motorised throttle valve bolts (10 Nm)**.

❑ Connect the battery (see **Battery : Removal - Refitting**) (MR 364, 80A, Battery).

❑ Torque tighten the **battery cover bolts (4 Nm)**.

B84 or C84 or E84 or K84 or L84, and M9R

Essential equipment
roller-type stud removal tool

Tightening torques ▽	
intake distributor studs	**9 Nm**
intake distributor nuts and bolts (initial torque)	**15 Nm**
intake distributor nuts and bolts	**25 Nm**
dipstick guide bolts on the intake distributor	**10 Nm**
front end panel upper bolts	**21 Nm**
front end panel lower bolts	**44 Nm**

REMOVAL

I - REMOVAL PREPARATION OPERATION

❑ Position the vehicle on a two-post lift (see **Vehicle: Towing and lifting**) (MR 364, 02A, Lifting equipment).

❑ Disconnect the battery (see **Battery: Removal - Refitting**) (MR 364, 80A, Battery).

❑ Remove:

- the engine covers,
- the front bumper (see **Front bumper: Removal - Refitting**) (MR 365, 55A, Exterior protection).

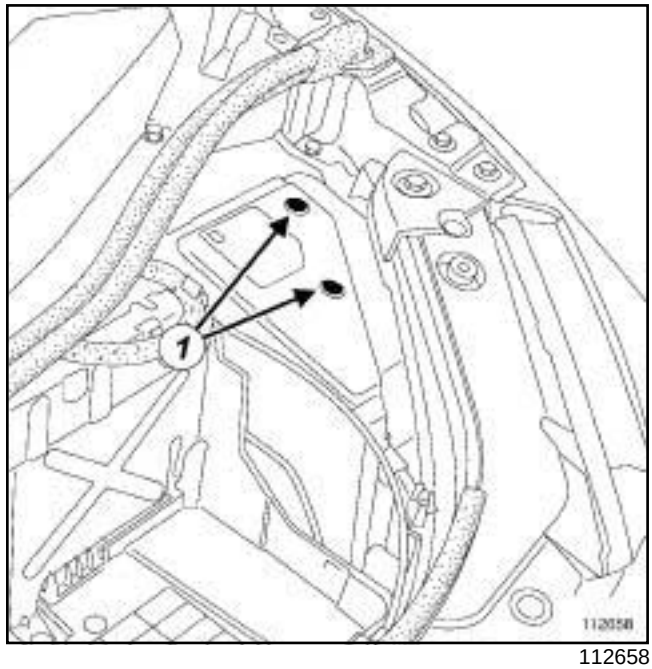

112658

❑ Remove:

- the engine accessories unit cover bolts (**1**) ,
- the engine accessories unit cover.

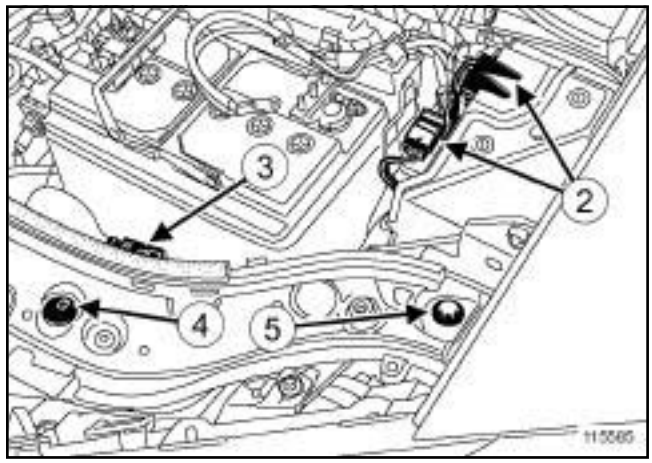

115585

❑ Disconnect the connectors (**2**) from the engine accessories unit.

❑ Unclip the bonnet opening cable (**3**) .

❑ Remove:

- the clips (**4**) ,
- the front end panel upper bolts (**5**) .

❑ Disconnect the screen washer pipes.

B84 or C84 or E84 or K84 or L84, and M9R

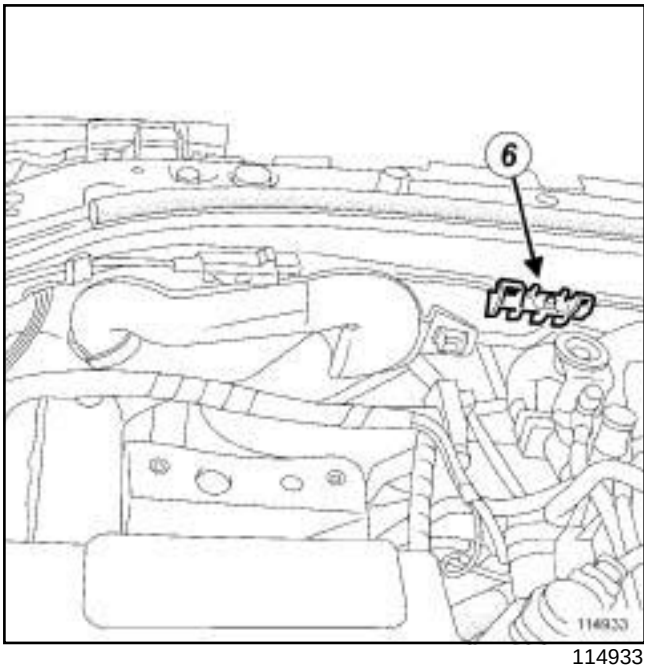

114933

❑ Unclip the air inlet scoop (**6**) .

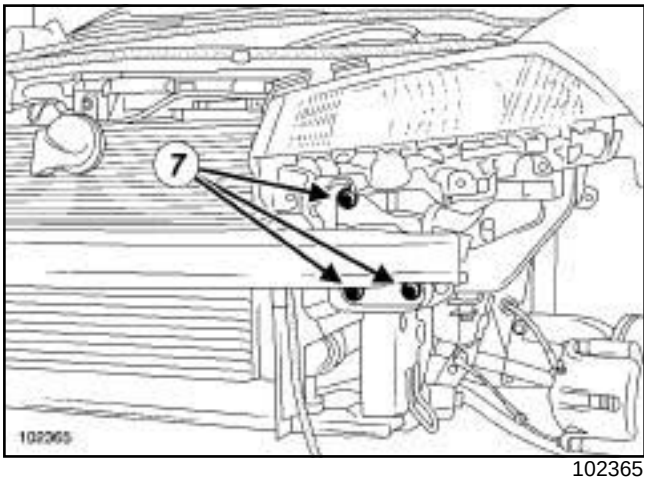

102365

❑ Remove:

- the front end panel lower bolts (**7**) ,
- the front end panel.

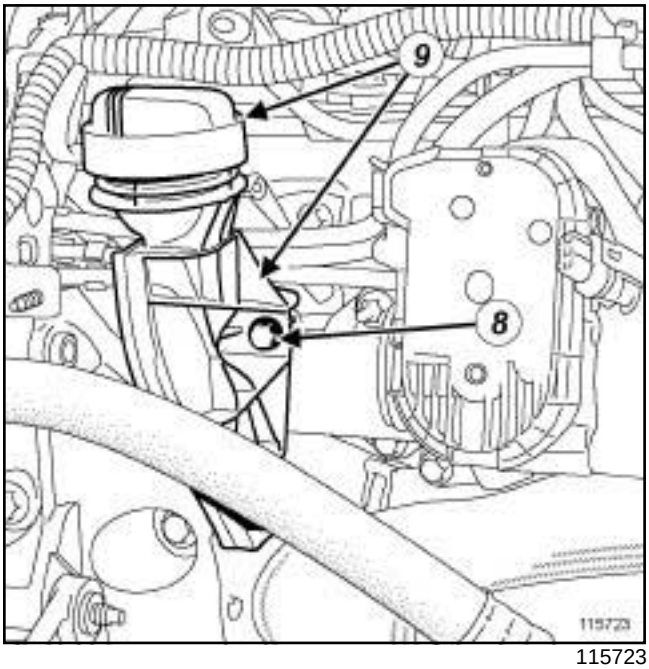

115723

❑ Remove:

- the damper valve (see **12A**, **Fuel mixture**, **Air inlet flap: Removal - Refitting**, page **12A-33**) ,
- the EGR solenoid valve (see **14A**, **Antipollution**, **Exhaust gas recirculation solenoid valve: Removal - Refitting**, page **14A-23**) ,
- the dipstick guide bolt (**8**) on the intake distributor,
- the dipstick and the dipstick guide (**9**) .

II - OPERATION FOR REMOVAL OF PART CONCERNED

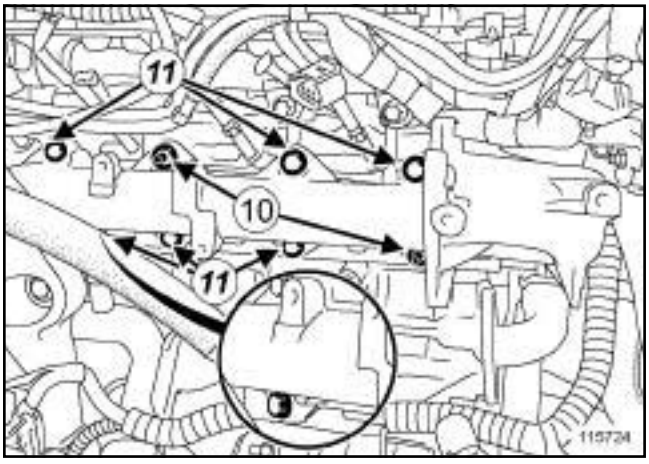

115724

❑ Remove:

- the intake distributor nuts (**10**) ,
- the intake distributor bolts (**11**) ,
- the intake distributor,

B84 or C84 or E84 or K84 or L84, and M9R

- the intake distributor seal.

REFITTING

I - REMOVAL PREPARATION OPERATION

❏ Always replace the studs if they are loose at the time of the removal operation.

❏ Always replace the inlet manifold seal.

❏ Always replace:

- the seal between the EGR solenoid valve and the intake distributor.
- the dipstick guide seal.

❏ Clean and degrease the bearing faces of:

- the intake distributor in case of reuse,
- the cylinder head.

II - REFITTING OPERATION FOR PART CONCERNED

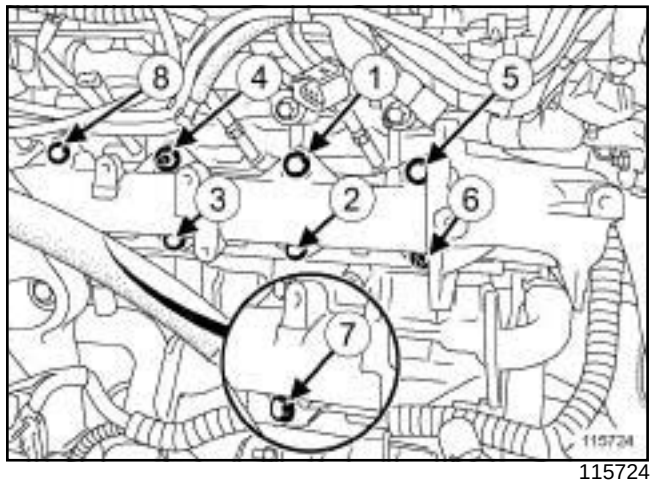

115724

❏ Refit:

- the new intake distributor seal,
- the intake distributor.

❏ Screw in the new intake distributor studs without tightening them (if loosened during removal).

❏ Torque tighten the **intake distributor studs (9 Nm)** using a **roller-type stud removal tool**.

❏ Position the intake distributor.

❏ Without tightening, fit:

- the intake distributor nuts,
- the intake distributor bolts.

❏ Pretighten to torque and in order the **intake distributor nuts and bolts (initial torque) (15 Nm)**.

❏ Torque tighten in order the **intake distributor nuts and bolts (25 Nm)**.

B84 or C84 or E84 or K84 or L84, and M9R

III - FINAL OPERATION.

❏ Lubricate the dipstick guide seal with engine oil.

❏ Refit the dipstick guide in the cylinder block.

❏ Screw in the dipstick guide bolts without tightening them.

❏ Torque tighten the **dipstick guide bolts on the intake distributor (10 Nm)**.

❏ Fit the oil level dipstick.

❏ Refit:

- the EGR solenoid valve (see **14A**, **Antipollution**, **Exhaust gas recirculation solenoid valve: Removal - Refitting**, page **14A-23**) ,
- the damper valve (see **12A**, **Fuel mixture**, **Air inlet flap: Removal - Refitting**, page **12A-33**) .

❏ Refit:

- the front end panel,
- the front end panel upper bolts,
- the front end panel lower bolts.

❏ Torque tighten:

- the **front end panel upper bolts (21 Nm)**,
- the **front end panel lower bolts (44 Nm)**.

❏ Clip on the air inlet scoop.

❏ Connect the engine accessories unit connectors.

❏ Clip the bonnet opening cable.

❏ Refit:

- the clips,
- the front end panel upper bolts.

❏ Connect the screen washer pipes.

❏ Refit:

- the engine accessories unit cover,
- the engine accessories unit cover bolts,
- the front bumper (see **Front bumper: Removal - Refitting**) (MR 365, 55A, Exterior protection),
- the engine covers.

❏ Connect the battery (see **Battery : Removal - Refitting**) (MR 364, 80A, Battery).

Injector holder shim: Removal - Refitting

B84 or C84 or G84 or S84, and K4J, and 730 or 732 or 740 – B84 or C84 or G84 or S84, and K4M, and 764 or 768 or 788 or 856

Tightening torques ▽	
bolts 11 and 12 on the injector holder shim	**25 N.m**
bolts 13 to 20 on the injector holder shim	**21 N.m**
upper timing cover bolt	**44 N.m**
suspended mounting bolt	**44 N.m**

REMOVAL

❑ Disconnect the battery (see **Battery: Removal - Refitting**) (MR 364, 80A, Battery).

❑ Remove the inlet manifold (see **12A**, **Fuel mixture**, **Inlet manifold: Removal - Refitting**, page **12A-49**) .

IMPORTANT

During this operation, be sure to:

- refrain from smoking or bringing red hot objects close to the working area,
- be careful of fuel splashes when disconnecting the union.

IMPORTANT

Always wear protective gear (gloves, goggles and breathing masks).

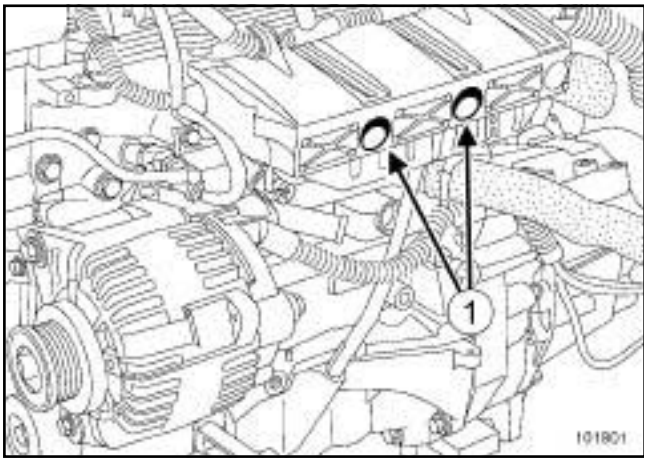

101801

❑ Remove the injector rail protector nuts (**1**) .

❑ Move the wiring harness to one side.

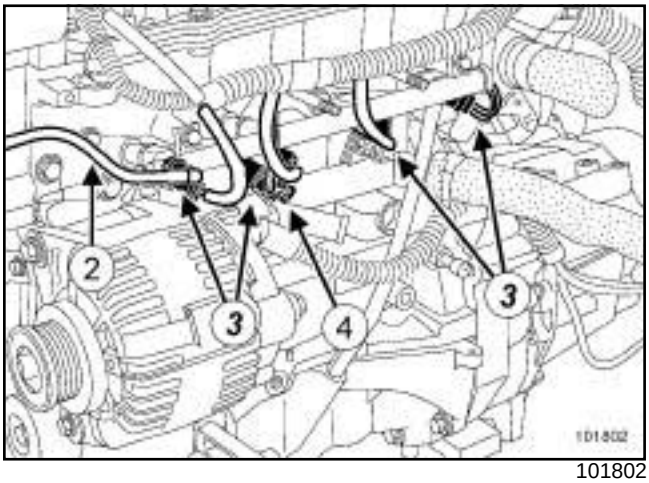

101802

❑ Disconnect:

- fuel supply union (**2**) ,
- injectors (**3**) ,
- pinking sensor (**4**) .

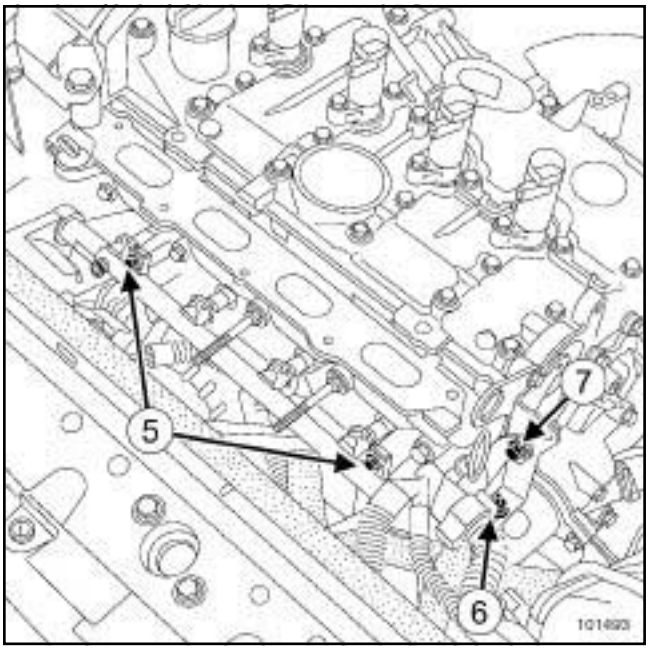

101493

❑ Remove the bolts (**5**) from the injector rail.

❑ Pull the injection rail gently towards yourself to remove it.

❑ Remove:

- the nut (**6**) from the wiring harness,
- the dipstick guide tube mounting (**7**) .

B84 or C84 or G84 or S84, and K4J, and 730 or 732 or 740 – B84 or C84 or G84 or S84, and K4M, and 764 or 768 or 788 or 856

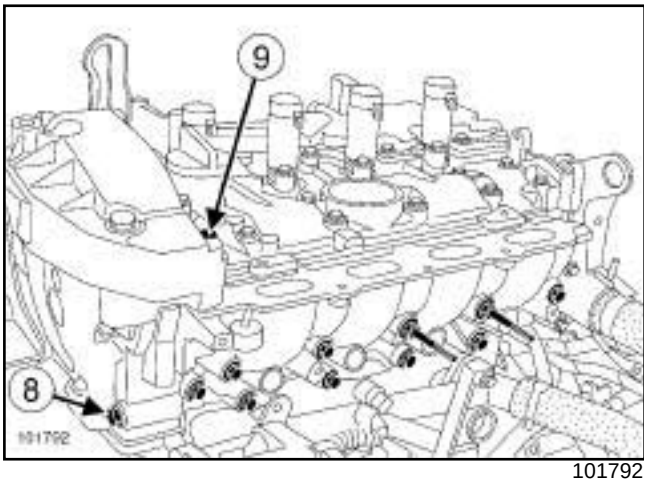

101792

❑ Remove:

- the suspended engine mounting cover bolt (**9**) ,
- the bolt (**8**) ,
- the injector holder shim bolts.

REFITTING

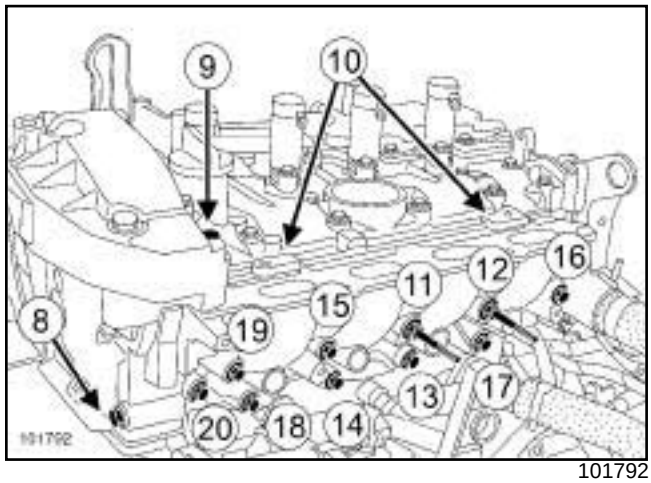

101792

❑ The injector holder shim seal must always be replaced.

❑ Fit all the injector holder shim bolts.

❑ Secure:

- the injector holder shim against the upper timing cover, by tightening the bolt (**8**) by hand,
- the injector holder shim against the suspended engine mounting by tightening bolt (**9**) by hand.

❑ Position the injector holder shim against the shims (**10**) on the rocker cover.

❑ Torque tighten and in order:

- **bolts 11 and 12 on the injector holder shim (25 N.m)**,
- **bolts 13 to 20 on the injector holder shim (21 N.m)**.

❑ Torque tighten:

- the **upper timing cover bolt (44 N.m)**,
- the **suspended mounting bolt (44 N.m)**.

❑ Refit the intake distributor (see **12A**, **Fuel mixture**, **Inlet manifold: Removal - Refitting**, page **12A-49**) .

❑ Proceed in the reverse order to removal.

❑ Connect the battery (see **Battery : Removal - Refitting**) (MR 364, 80A, Battery).

Injector holder shim: Removal - Refitting

B84 or C84 or G84 or S84, and K4M, and 760 or 761 or 766 or 812 or 813

Tightening torques ▽	
injector holder shim bolts 5 and 6	**25 N.m**
injector holder shim bolts 7 to 14	**21 N.m**
suspended mounting bolt	**44 N.m**
upper timing cover bolt	**44 N.m**

REMOVAL

❑ Disconnect the battery (see **Battery: Removal - Refitting**) (MR 364, 80A, Battery).

❑ Remove the inlet manifold (see **12A**, **Fuel mixture**, **Inlet manifold: Removal - Refitting**, page **12A-49**) .

IMPORTANT

During this operation, be sure to:

- refrain from smoking or bringing red hot objects close to the working area,
- be careful of fuel splashes when disconnecting the union.

IMPORTANT

Always wear protective gear (gloves, goggles and breathing masks).

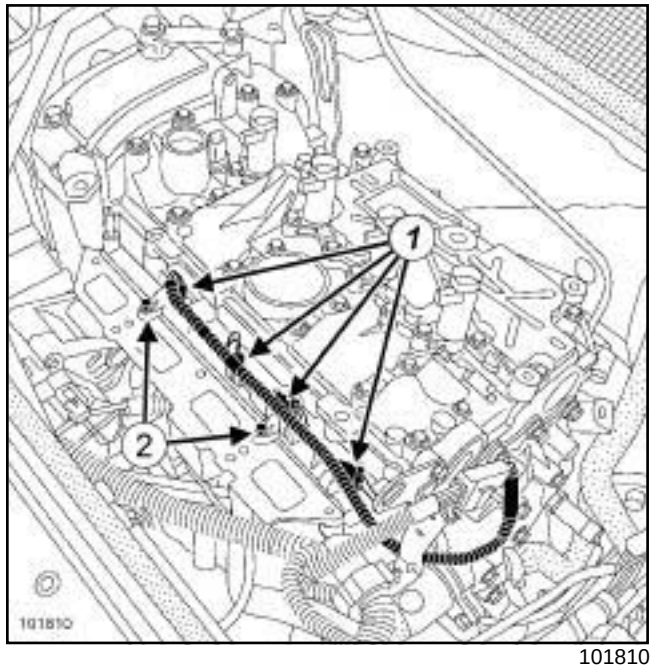

101810

❑ Disconnect injectors (**1**) .

❑ Move the wiring harness to one side.

❑ Remove:

- the injector rail bolts (**2**) ,
- the injector rail, pulling it carefully towards you.

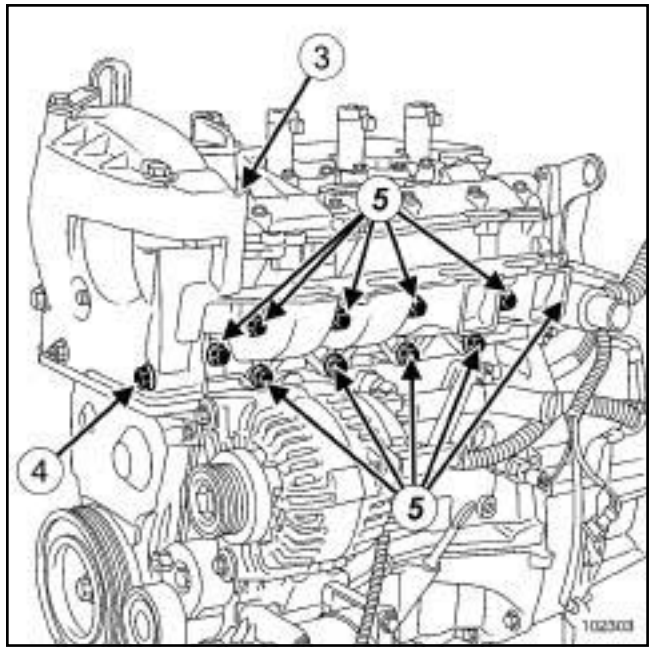

102303

❑ Remove:

- the suspended engine mounting cover bolt (**3**) ,
- the bolt (**4**) ,
- the injector holder shim bolts (**5**) .

B84 or C84 or G84 or S84, and K4M, and 760 or 761 or 766 or 812 or 813

REFITTING

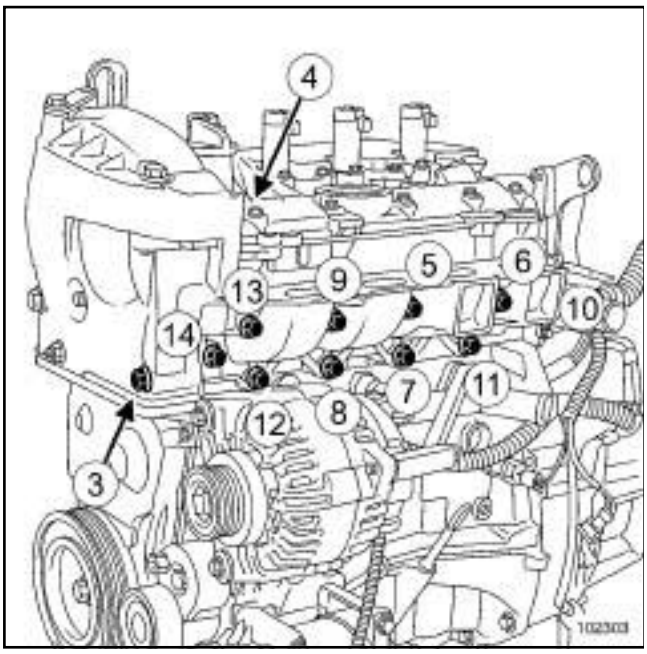

102303

- The injector holder shim seal must always be replaced.
- Fit all the injector holder shim bolts.
- Secure:
  - the injector holder shim against the upper timing cover, by tightening the bolt (**3**) by hand,
  - the injector holder shim against the suspended engine mounting by tightening bolt (**4**) by hand.
- Torque tighten and in order:
  - **injector holder shim bolts 5 and 6 (25 N.m)**,
  - **injector holder shim bolts 7 to 14 (21 N.m)**.
- Torque tighten:
  - the **suspended mounting bolt (44 N.m)**,
  - the **upper timing cover bolt (44 N.m)**.
- Refit the intake distributor (see **12A**, **Fuel mixture**, **Inlet manifold: Removal - Refitting**, page **12A-49**) .
- Proceed in the reverse order to removal.
- Connect the battery (see **Battery : Removal - Refitting**) (MR 364, 80A, Battery).

B84 or C84 or G84 or S84, and F4R, and 770 or 771

Tightening torques ▽	
bolts 7 and 8 on the injector holder shim	**25 Nm**
injector holder shim bolts 9 to 16	**21 Nm**
bolt 6 on the suspended mounting	**44 Nm**
bolt 5 on the upper timing cover	**44 Nm**
battery cover mounting bolts	**4 Nm**

REMOVAL

❑ Disconnect the battery (see **Battery: Removal - Refitting**) (MR 364, 80A, Battery).

❑ Remove the inlet manifold (see **12A**, **Fuel mixture**, **Inlet manifold: Removal - Refitting**, page **12A-49**) .

IMPORTANT

During this operation, it is essential to:

- refrain from smoking or bringing red hot objects close to the working area,
- expect fuel splashes when disconnecting the supply union,
- protect sensitive areas from fuel outflow.

IMPORTANT

Wear gloves during the operation.

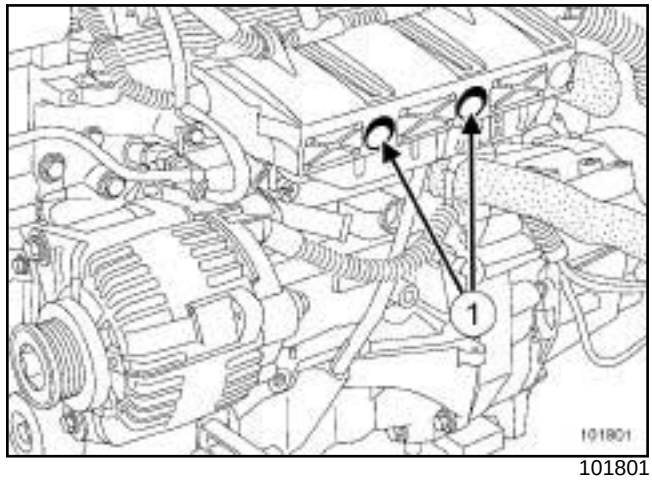

101801

❑ Remove the injector rail protector mounting nuts (**1**) .

❑ Move the wiring harness to one side.

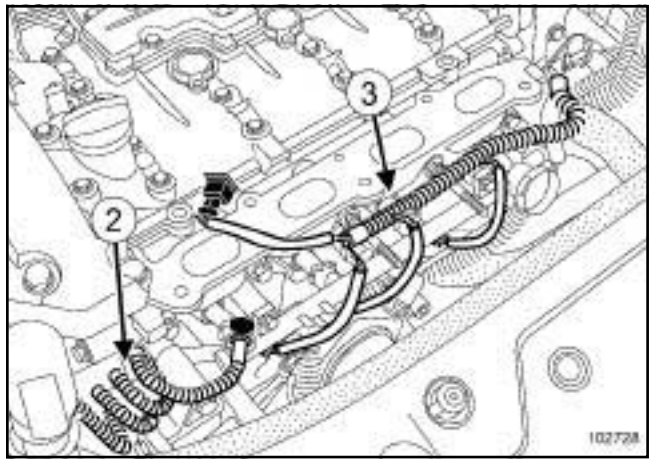

102728

❑ Disconnect:

- fuel supply union (**2**) ,
- the injector wiring harness (**3**) .

B84 or C84 or G84 or S84, and F4R, and 770 or 771

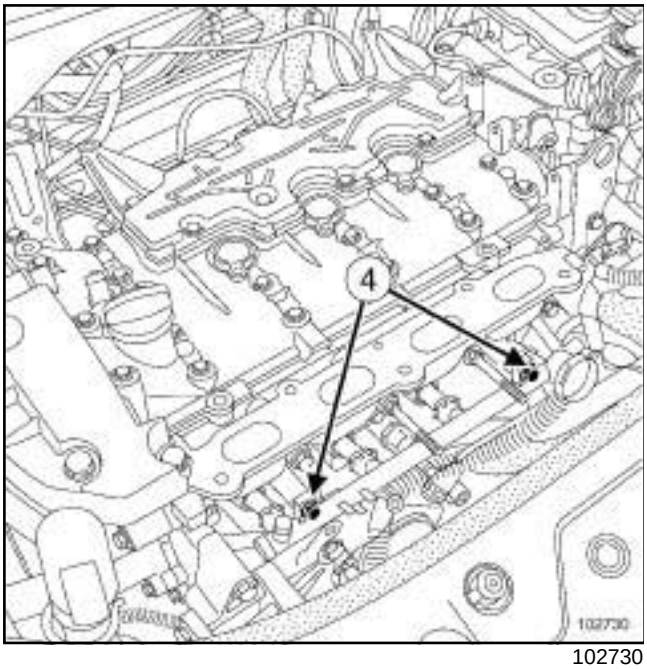

102730

❑ Remove:

- the injector rail mounting bolts (**4**) ,
- the injector rail, pulling it carefully towards you.

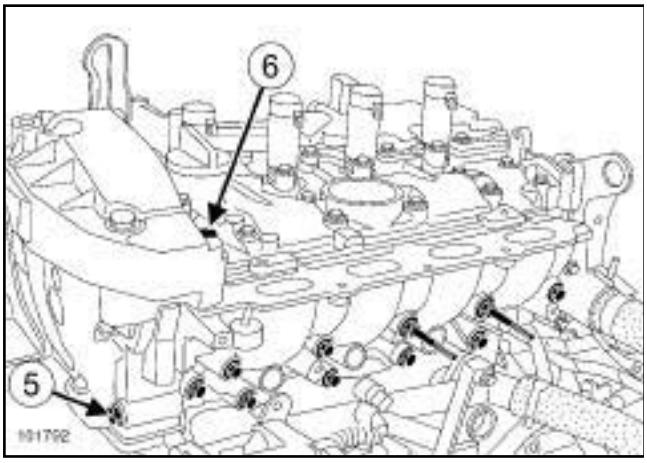

101792

❑ Remove:

- the mounting bolt (**6**) from the suspended engine mounting cover,
- the mounting bolts (**5**) ,
- the injector holder shim mounting bolts.

REFITTING

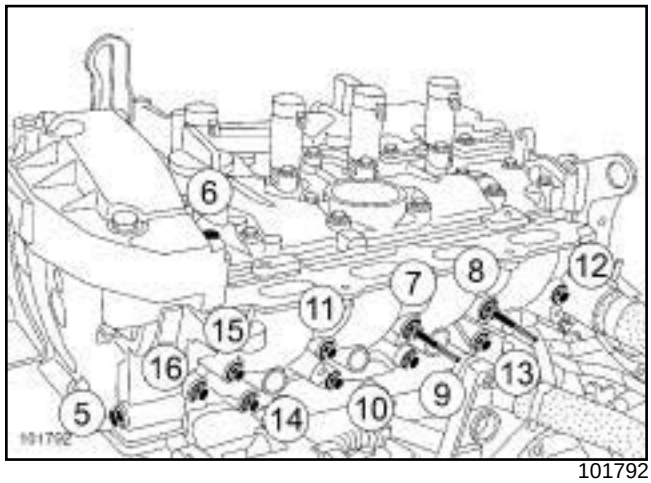

101792

❑ The injector holder shim seal must always be replaced.

❑ Fit all the mounting bolts.

❑ Secure:

- the injector holder shim against the upper timing cover, by tightening the bolt (**5**) by hand,
- the injector holder shim against the suspended mounting by tightening the bolt (**6**) by hand.

❑ Torque tighten and in order:

- **bolts 7 and 8 on the injector holder shim (25 Nm)**,
- the **injector holder shim bolts 9 to 16 (21 Nm)**.

❑ Torque tighten:

- **bolt 6 on the suspended mounting (44 Nm)**,
- **bolt 5 on the upper timing cover (44 Nm)**.

❑ Refit the intake distributor (see **12A**, **Fuel mixture**, **Inlet manifold: Removal - Refitting**, page **12A-49**) .

❑ Proceed in the reverse order to removal.

❑ Connect the battery (see **Battery : Removal - Refitting**) (MR 364, 80A, Battery).

❑ Torque tighten the **battery cover mounting bolts (4 Nm)**.

B84 or C84 or G84 or S84, and F9Q, and 800

Essential special tooling	
Mot. 1729	Pin wrench for removing the EGR valve.

Tightening torques ▽	
manifold mounting studs	**8 Nm**
manifold mounting nuts	**28 Nm**
exhaust gas recirculation valve mounting bolts	**12 Nm**
engine cover mounting bolts	**4 Nm**

REMOVAL

❑ Disconnect the battery (see **Battery: Removal - Refitting**) (MR 364, 80A, Battery).

❑ Remove:

- the intake duct (see **12A**, **Fuel mixture**, **Air inlet duct: Removal - Refitting**, page **12A-46**) ,
- the turbocharger (see **12B**, **Turbocharging**, **Turbocharger: Removal - Refitting**, page **12B-4**) .

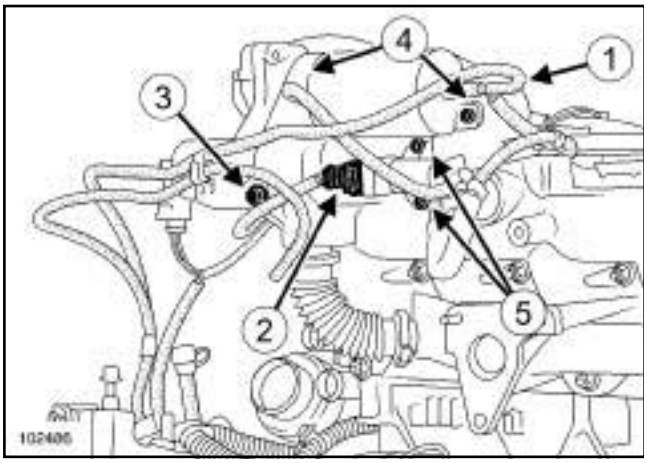

102486

❑ Disconnect:

- the air pipe on the vacuum canister (**1**) ,
- the engine stop solenoid valve connector (**2**) .

❑ Remove:

- the pipe mountings (**3**) ,
- the vacuum canister (**4**) ,
- the engine stop solenoid valve (**5**) .

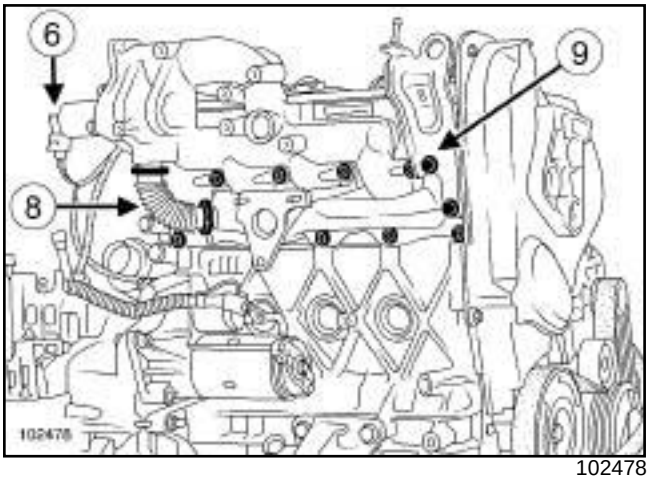

102478

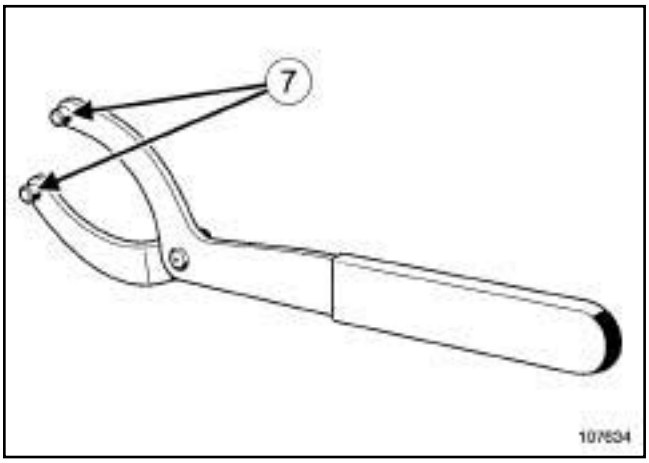

107634

❑ Disconnect the exhaust gas recirculation solenoid valve.

❑ Remove the EGR solenoid valve (**6**) using the **(Mot. 1729)** :

- place the lugs (**7**) of the **(Mot. 1729)**,
- take care to fully drive home the lugs (**7**) ,
- turn the tool in small stages to detach the EGR solenoid valve from its housing.

❑ Remove:

- the exhaust gas recirculation pipe (**8**) ,
- the engine lifting bracket (**9**) ,
- the manifold mounting nuts,
- the manifolds.

B84 or C84 or G84 or S84, and F9Q, and 800

REFITTING

- ❑ Proceed in the reverse order to removal.
- ❑ Replace the gaskets:
  - on the manifolds,
  - the exhaust gas recirculation solenoid valve,
  - on the air inlet duct.
- ❑ Torque tighten:
  - the **manifold mounting studs (8 Nm)**,
  - the **manifold mounting nuts (28 Nm)**,
  - the **exhaust gas recirculation valve mounting bolts (12 Nm)**.
- ❑ Connect the battery (see **Battery : Removal - Refitting**) (MR 364, 80A, Battery).
- ❑ Torque tighten the **engine cover mounting bolts (4 Nm)**.

B84 or C84 or G84 or S84, and F9Q, and 803 or 804 or 816 or 818

Tightening torques ▽	
manifold studs	**8 Nm**
manifold nuts	**28 Nm**

REMOVAL

❑ Disconnect the battery (see **Battery: Removal - Refitting**) (MR 364, 80A, Battery).

❑ Position the vehicle on a two-post lift (see **Vehicle: Towing and lifting**) (MR 364, 02A, Lifting equipment).

❑ Remove:

- the intake duct (see **12A**, **Fuel mixture**, **Air inlet duct: Removal - Refitting**, page **12A-46**) ,
- the injector rail protector (see **13B**, **Diesel injection**, **Injector rail protector: Removal - Refitting**, page **13B-154**) ,
- the exhaust gas recirculation unit (see **14A**, **Anti-pollution**, **Exhaust gas recirculation unit: Removal - Refitting**, page **14A-35**) ,
- the exhaust gas recirculation pipe,
- the catalytic pre-converter (see **19B**, **Exhaust**, **Catalytic pre-converter: Removal - Refitting**, page **19B-29**) ,
- the starter (see **16A**, **Starting - Charging**, **Starter: Removal - Refitting**, page **16A-21**) .
- the turbocharger (see **12B**, **Turbocharging**, **Turbocharger: Removal - Refitting**, page **12B-4**) ,

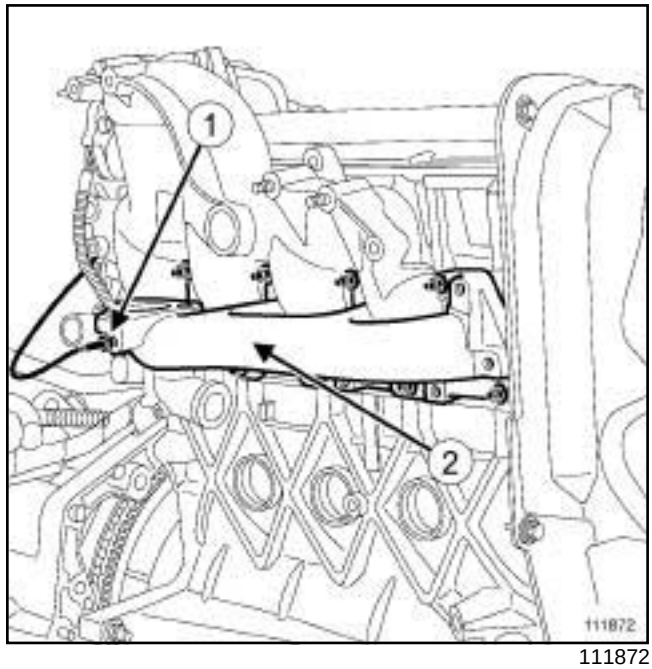

111872

❑ Disconnect the exhaust gas temperature sensor upstream of the turbocharger (**1**) .

❑ Remove:

- the nuts from the manifold,
- the exhaust manifold (**2**) .

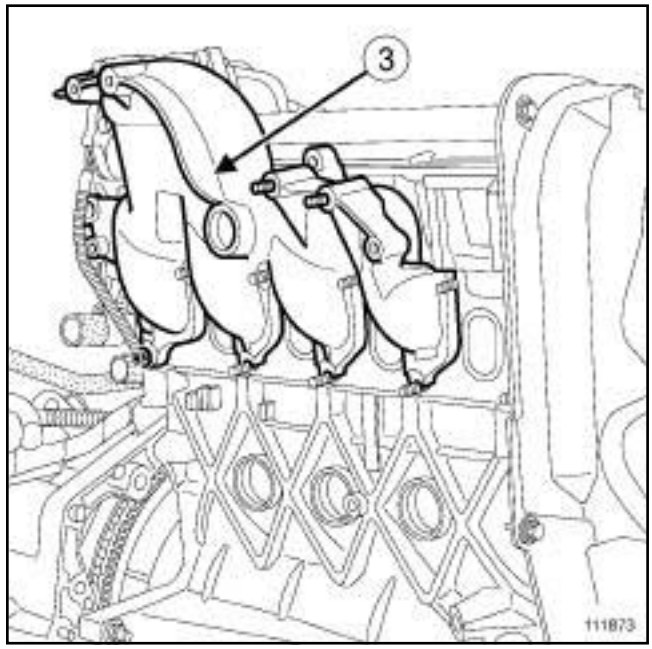

111873

❑ Remove the inlet manifold (**3**) .

B84 or C84 or G84 or S84, and F9Q, and 803 or 804 or 816 or 818

REFITTING

- ❑ Be sure to replace the manifold gaskets.
- ❑ For studs removed when removing the manifolds:
  - apply **LOCTITE FRENBLOC** (see MR 364, 04B, Products - consumables) to the inlet of the cylinder head thread holes,
  - wipe any run-off after refitting the studs,
  - torque tighten the **manifold studs (8 Nm)**.
- ❑ Refit the manifolds.
- ❑ Torque tighten the **manifold nuts (28 Nm)**.
- ❑ Proceed in the reverse order to removal.

F9Q, and 818

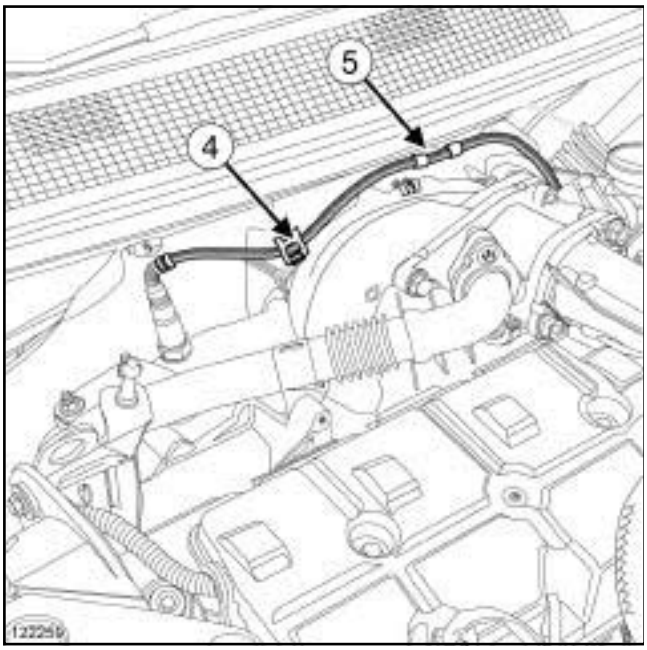

122259

- ❑ If the inlet manifold is replaced, fit new oxygen sensor wiring clips:
  - the locking clip at (**4**) ,
  - the small clip at (**5**) .
- ❑ Refit:
  - the turbocharger (see **12B**, **Turbocharging**, **Turbocharger: Removal - Refitting**, page **12B-4**) ,
  - the exhaust gas recirculation solenoid valve (see **14A**, **Antipollution**, **Exhaust gas recirculation unit: Removal - Refitting**, page **14A-35**) ,
  - the inlet duct (see **12A**, **Fuel mixture**, **Air inlet duct: Removal - Refitting**, page **12A-46**) .
- ❑ Connect the battery (see **Battery : Removal - Refitting**) (MR 364, 80A, Battery).
- ❑ Refit the engine lifting bracket.

F9Q, and 808

Tightening torques ▽	
manifold mounting studs	**8 N.m**
manifold mounting nuts	**28 N.m**
battery cover mounting bolts	**4 N.m**

REMOVAL

❑ Disconnect the battery, starting with the negative terminal (see **Battery : Removal - Refitting**) (80A, Battery).

❑ Remove:

- the inlet duct,
- the exhaust gas recirculation unit (see **14A**, **Anti-pollution**, **Exhaust gas recirculation solenoid valve: Removal - Refitting**, page **14A-23**) ,
- the turbocharger (see **12B**, **Turbocharging**, **Turbocharger: Removal - Refitting**, page **12B-4**) .

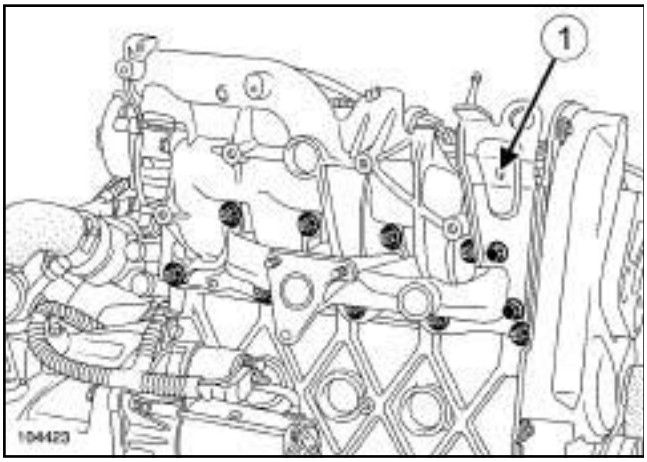

104423

❑ Remove:

- the engine lifting bracket
- the manifold mounting nuts,
- the manifolds.

REFITTING

❑ Be sure to replace the manifold gaskets.

❑ For studs removed when removing the manifolds:

- apply **LOCTITE FRENBLOC** around the entrance of the cylinder head thread holes,
- wipe any run-off after refitting the studs,
- Torque tighten the **manifold mounting studs (8 N.m)**.

❑ Refit the manifolds.

❑ Torque tighten the **manifold mounting nuts (28 N.m)**.

❑ Proceed in the reverse order to removal.

❑ Connect the battery, starting with the positive terminal.

> **WARNING**
> Carry out the necessary programming (see **Battery : Removal - Refitting**) (80A, Battery).

❑ Torque tighten the **battery cover mounting bolts (4 N.m)**.

B84 or C84 or E84 or K84 or L84, and M9R

Tightening torques ▽	
exhaust manifold nuts (initial torque)	**18 N.m**
exhaust manifold nuts	**30 N.m**
front end panel lower bolts	**44 N.m**
front end panel upper bolts	**21 N.m**
air filter unit air outlet pipe clip	**5.5 N.m**
reinforcement lower cross member nuts	**62 N.m**

IMPORTANT
Wear protective gloves during all operations.

REMOVAL

I - REMOVAL PREPARATION OPERATION

❑ Position the vehicle on a two-post lift (see **Vehicle: Towing and lifting**) (MR 364, 02A, Lifting equipment).

❑ Remove:

- the battery (see **Battery: Removal - Refitting**) (MR 364, 80A, Battery),
- the front wiper arms (see **Windscreen wiper arm: Removal - Refitting**) (MR 364, 85A, Wiping - Washing),
- the scuttle panel grille (see **Scuttle panel grille: Removal - Refitting**) (MR 365, 56A, Exterior equipment),
- the acoustic protection clips on the scuttle panel partition,
- the acoustic protection.

M9R, and 700

❑ Remove the catalytic converter (see **19B**, **Exhaust**, **Catalytic converter: Removal - Refitting**, page **19B-46**) .

M9R, and 724

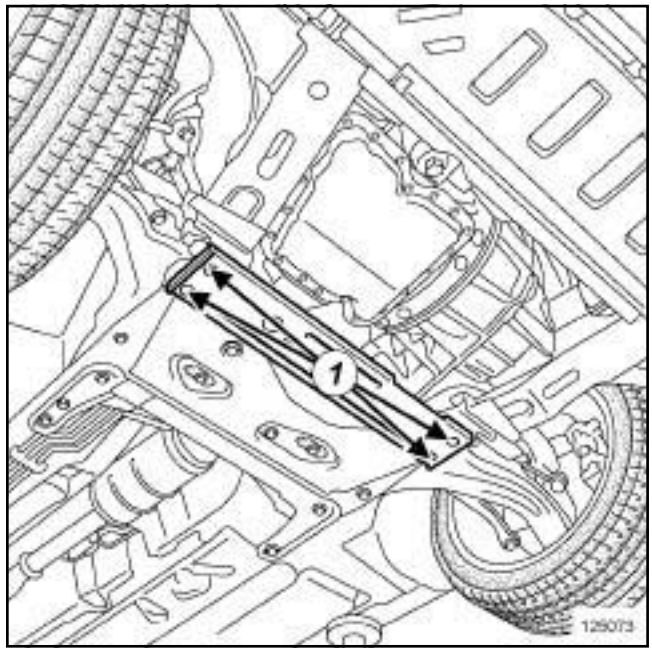

125073

❑ Remove:

- the reinforcement lower cross member nuts (**1**) ,
- the reinforcement lower cross member.

B84 or C84 or E84 or K84 or L84, and M9R

M9R, and 722 or 724

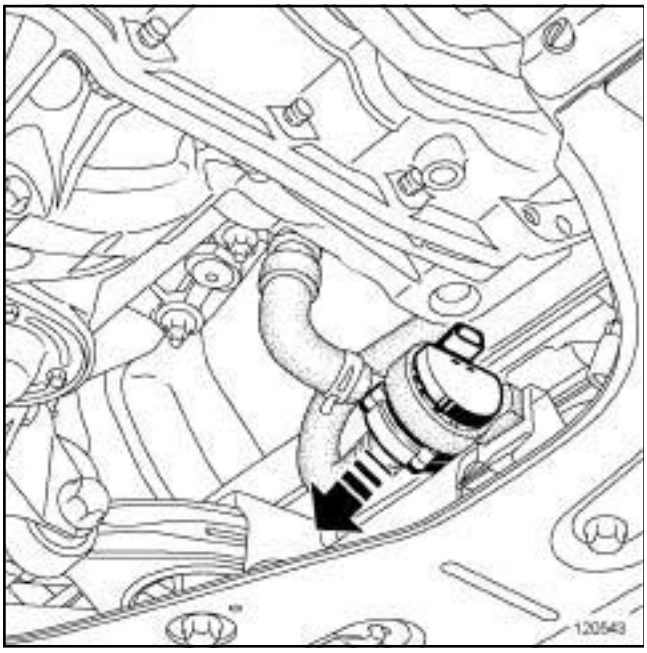

120543

❑ Remove the electric coolant pump from its mounting.

❑ Remove:

- the front right-hand wheel (see **Wheel: Removal - Refitting**) (MR 364, 35A, Wheels and tyres),
- the front right-hand driveshaft (see **Front right-hand wheel driveshaft: Removal - Refitting**) (MR 364, 29A, Driveshafts),
- the lower engine tie-bar (see **19D**, **Engine mounting**, **Lower engine tie-bar: Removal - Refitting**, page **19D-36**) ,
- the catalytic pre-converter (see **19B**, **Exhaust**, **Catalytic pre-converter: Removal - Refitting**, page **19B-29**) .

❑ Remove the turbocharger (see **12B**, **Turbocharging**, **Turbocharger: Removal - Refitting**, page **12B-4**) .

❑ Remove the battery tray (see **Battery tray: Removal - Refitting**) (MR 364, 80A, Battery).

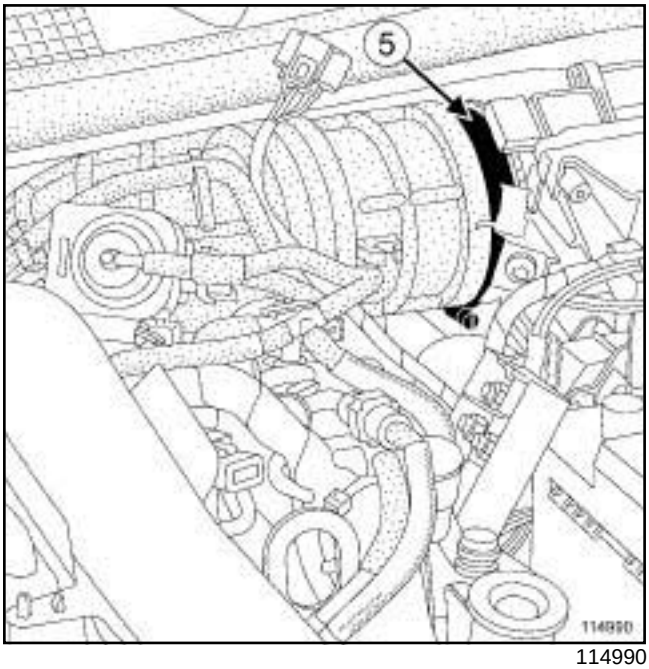

114990

❑ Loosen the air filter box air outlet pipe clip (**5**) on the air flowmeter end.

❑ Disconnect the air filter unit air outlet pipe on the air flowmeter side.

❑ Remove the front bumper (see **Front bumper: Removal - Refitting**) (MR 365, 55A, Exterior protection).

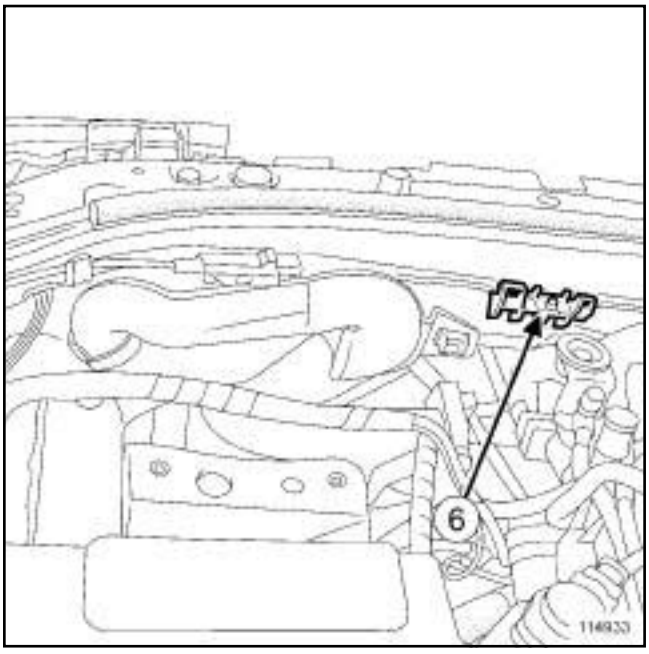

114933

❑ Unclip the air inlet scoop (**6**) .

B84 or C84 or E84 or K84 or L84, and M9R

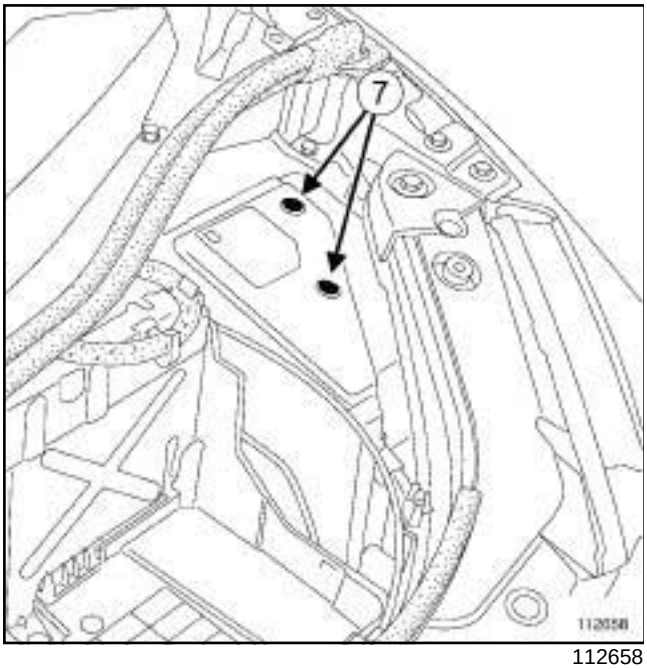

112658

❑ Remove:

- the engine accessories unit cover bolts (**7**) ,
- the engine accessories unit cover.

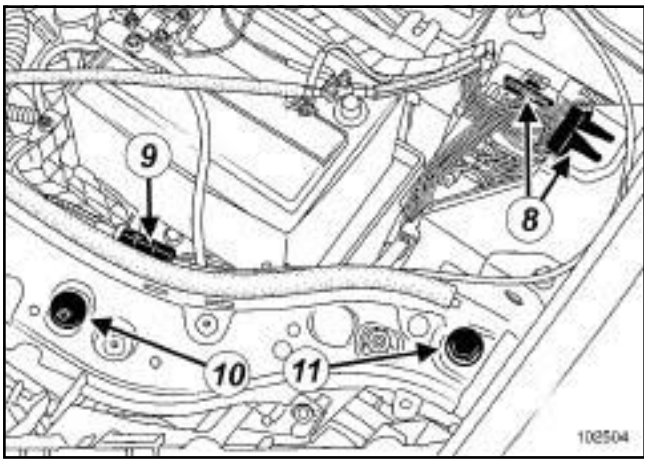

102504

❑ Disconnect the connectors (**8**) from the engine accessories unit.

❑ Unclip the bonnet opening cable (**9**) .

❑ Remove:

- the front end panel clips (**10**) ,
- the front end panel upper bolts (**11**) .

❑ Disconnect the screen washer pipes.

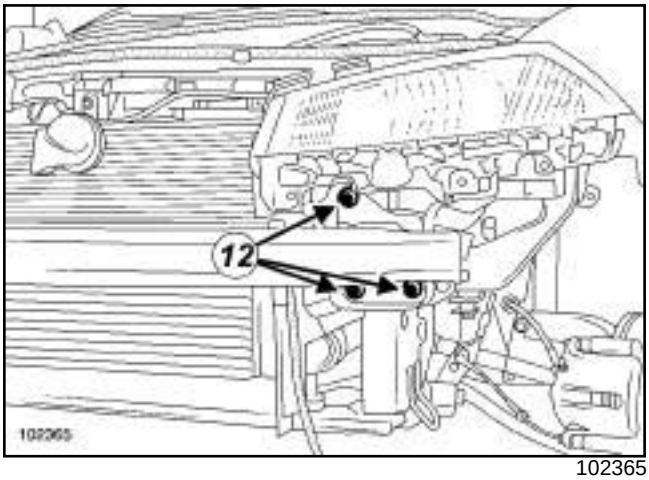

102365

❑ Remove:

- the front end panel lower bolts (**12**) ,
- the front end panel.

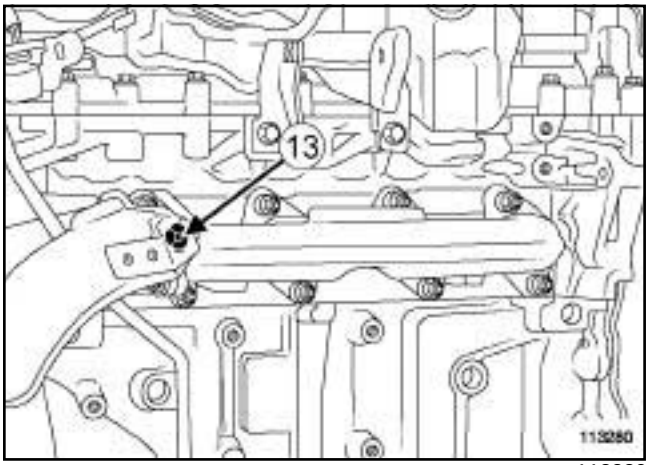

113280

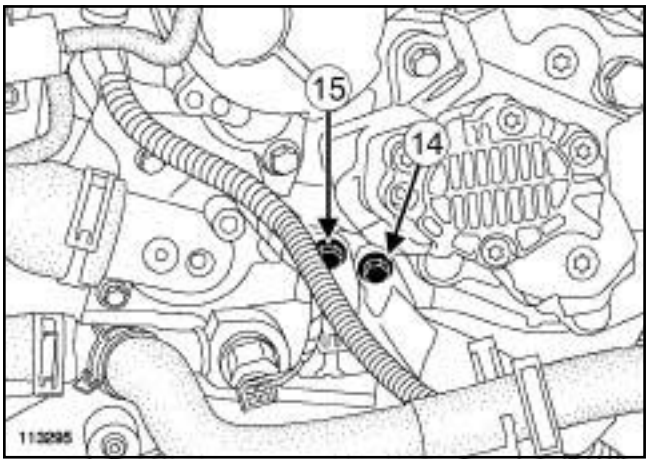

113295

❑ Remove:

- the bolt (**13**) from the EGR duct heat shield on the exhaust manifold,

B84 or C84 or E84 or K84 or L84, and M9R

- the bolt (**14**) from the EGR duct heat shield on the cylinder head,
- the bolt (**15**) from the EGR duct on the cylinder head.

❏ Move the EGR pipe heat shield to one side.

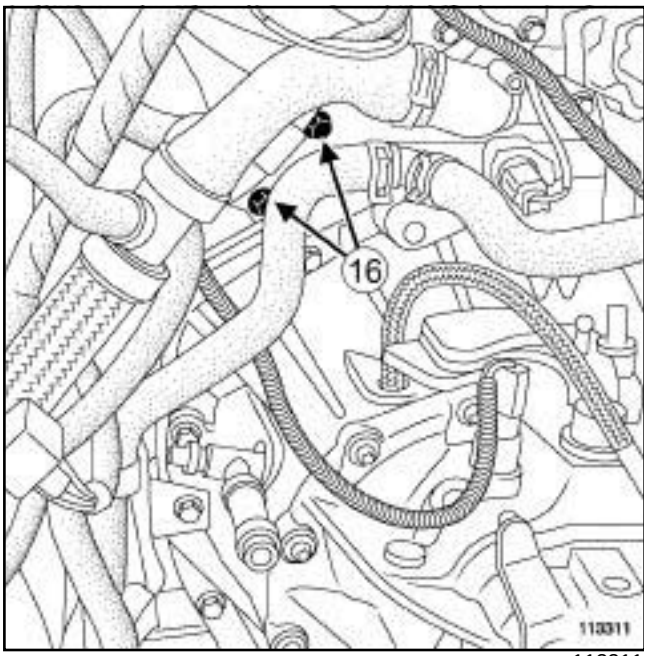

113311

❏ Remove the bolts (**16**) from the EGR duct on the EGR cooler.

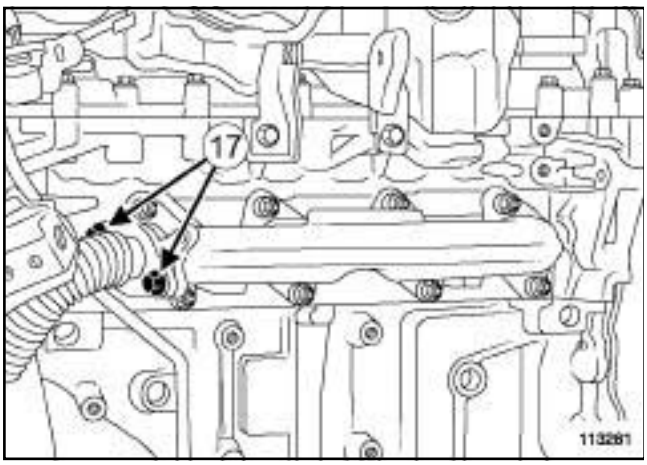

113281

❏ Remove the bolts (**17**) from the EGR duct on the exhaust manifold.

❏ Move the EGR duct to one side.

❏ Remove:

- the gasket between the EGR cooler and the EGR duct,
- the gasket between the EGR pipe and the exhaust manifold.

II - REMOVAL OPERATION FOR PART CONCERNED

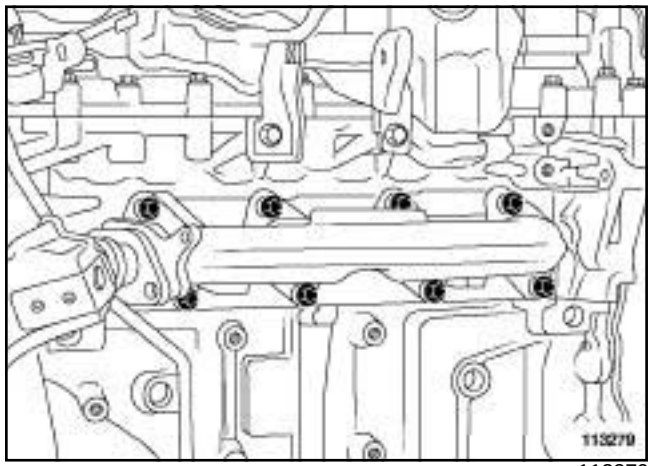

113279

❏ Remove:

- the exhaust manifold nuts,
- the exhaust manifold spacers,
- the exhaust manifold,
- the exhaust manifold gasket.

REFITTING

I - REFITTING PREPARATIONS OPERATION

❏ Clean and degrease the bearing faces:

- the exhaust manifold if it is to be reused,
- the cylinder head face,
- the EGR duct,

❏ Check that the exhaust manifold studs are correctly tightened, if not, replace any loose exhaust manifold studs.

B84 or C84 or E84 or K84 or L84, and M9R

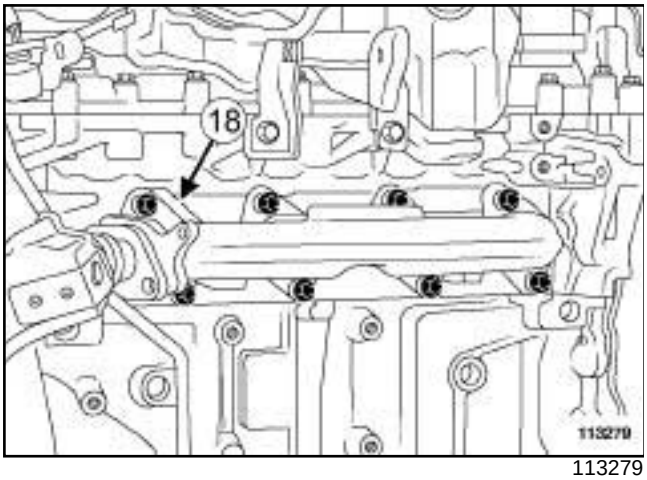

113279

❑

> Note:
>
> Check that the manifold gasket is positioned correctly.
>
> The tab must be positioned as (**18**) .

❑ Refit the new seal on the exhaust manifold.

II - REFITTING OPERATION FOR PART CONCERNED

❑ Refit:

- the exhaust manifold,
- the spacers.

❑ Fit without tightening the new exhaust manifold nuts.

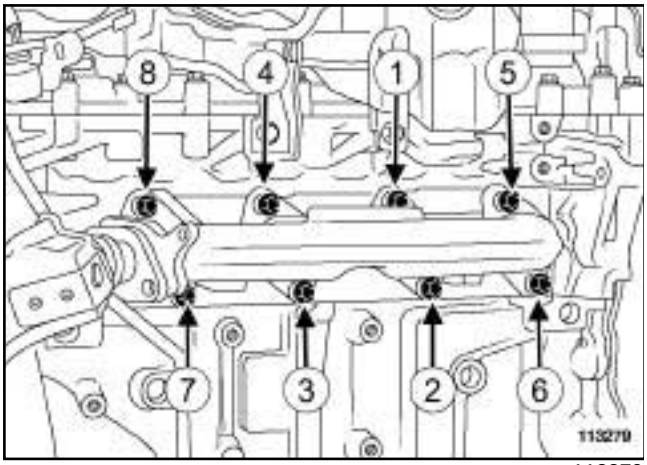

113279

❑ Tighten to torque and in order the **exhaust manifold nuts (initial torque) (18 N.m)**.

❑ Tighten to torque and in order the **exhaust manifold nuts (30 N.m)**.

III - FINAL OPERATION.

❑ Refit:

- the new gasket between the EGR duct and the exhaust manifold,
- the new gasket between the EGR cooler and the EGR duct.

❑ Without tightening, fit:

- the EGR duct bolts on the exhaust manifold,
- the EGR duct bolts on the EGR cooler,
- the EGR duct bolts on the cylinder head.

❑ Tighten:

- the EGR duct bolts on the EGR cooler,
- the EGR duct bolts on the exhaust manifold,
- the EGR duct bolts on the cylinder head.

❑ Fit the heat shield.

❑ Without tightening, fit:

- the bolts from the EGR duct heat shield on the cylinder head,
- the bolts from the EGR duct heat shield on the exhaust manifold.

❑ Tighten:

- the bolts from the EGR duct heat shield on the cylinder head,
- the bolts from the EGR duct heat shield on the exhaust manifold.

❑ Refit:

- the front end panel,
- the front end panel upper bolts,
- the front end panel lower bolts.

❑ Torque tighten:

- the **front end panel lower bolts (44 N.m)**,
- the **front end panel upper bolts (21 N.m)**.

❑ Clip on the air inlet scoop.

❑ Connect the screen washer pipes.

❑ Refit the front end panel clips.

❑ Fit the bonnet opening cable.

❑ Connect the engine accessories unit connectors.

❑ Refit:

- the engine accessories unit cover,
- the engine accessories unit cover bolts,

B84 or C84 or E84 or K84 or L84, and M9R

- the front bumper (see **Front bumper: Removal - Refitting**) (MR 365, 55A, Exterior protection).

❑ Connect the air filter box air outlet pipe to the air flowmeter.

❑ Torque tighten the **air filter unit air outlet pipe clip (5.5 N.m)**.

❑ Refit:

- the turbocharger (see **12B**, **Turbocharging**, **Turbocharger: Removal - Refitting**, page **12B-4**) ,
- the battery tray (see **Battery tray: Removal - Refitting**) (MR 364, 80A, Battery),
- the battery (see **Battery: Removal - Refitting**) (MR 364, 80A, Battery).

M9R, and 700

❑ Refit the catalytic converter (see **19B**, **Exhaust**, **Catalytic converter: Removal - Refitting**, page **19B-46**) .

M9R, and 724

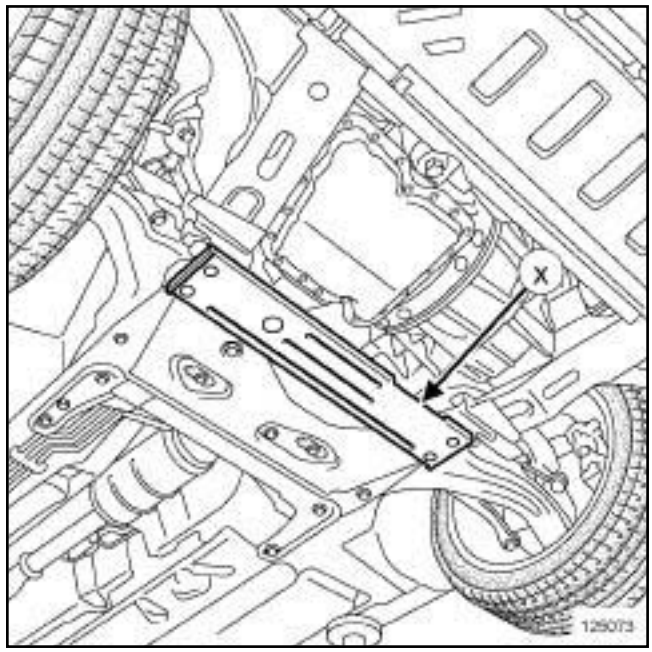

125073

❑

Note:

Position the indent (**x**) of the reinforcement lower cross member on the gearbox side.

❑ Refit:

- the reinforcement lower cross member,
- the reinforcement lower cross member nuts.

❑ Torque tighten the **reinforcement lower cross member nuts (62 N.m)**.

M9R, and 722 or 724

❑ Fit the electric coolant pump onto its mounting.

❑ Refit:

- the catalytic pre-converter (see **19B**, **Exhaust**, **Catalytic pre-converter: Removal - Refitting**, page **19B-29**) ,
- the front right-hand driveshaft (see **Front right-hand wheel driveshaft: Removal - Refitting**) (MR 364, 29A, Driveshafts),
- the lower engine tie-bar (see **19D**, **Engine mounting**, **Lower engine tie-bar: Removal - Refitting**, page **19D-36**) ,

B84 or C84 or E84 or K84 or L84, and M9R

- the front right-hand wheel (see **Wheel: Removal - Refitting**) (MR 364, 35A, Wheels and tyres).

❑ Refit:

- the acoustic protection,
- the acoustic protection clips on the scuttle panel partition,
- the scuttle panel grille (see **Scuttle panel grille: Removal - Refitting**) (MR 365, 56A, Exterior equipment),
- the front wiper arms (see **Windscreen wiper arm: Removal - Refitting**) (MR 364, 85A, Wiping - Washing).

M9R, and 722 or 724

❑ Make sure the coolant fluid level is at the « Maximum » mark.

❑ Bleed the cooling system (see **19A**, **Cooling**, **Cooling circuit: Draining - Refilling**, page **19A-15**) .

Exhaust manifold: Removal - Refitting

B84 or C84 or G84 or S84, and K9K, and 722 or 728 or 729

Essential special tooling	
Mot. 1567	Long nose pliers for EGR duct clips.

Tightening torques ▽	
exhaust manifold studs	**9 Nm**
exhaust manifold mounting nuts	**26 Nm**
exhaust gas recirculation unit mounting bolts	**21 Nm**
air inlet metal tube mounting bolts	**21 Nm**
lifting eye	**21 Nm**
battery cover mounting bolts	**4 Nm**

REMOVAL

❑ Position the vehicle on a two-post lift.

❑ Disconnect the battery (see **Battery: Removal - Refitting**) (MR 364, 80A, Battery).

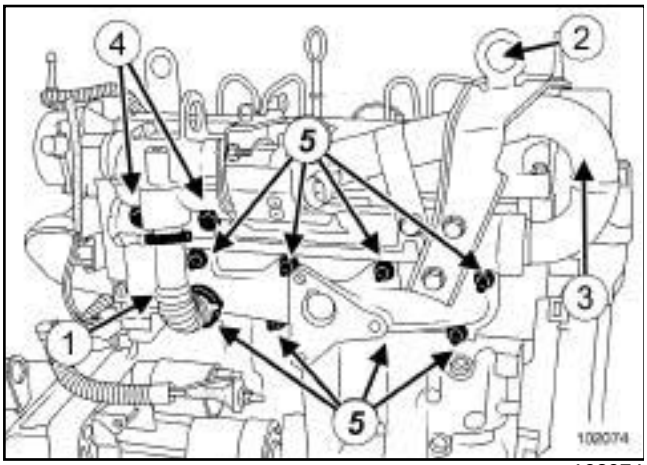

102074

❑ Remove:

- lifting eye (**2**) ,
- the air inlet metal tube (**3**) ,
- the turbocharger (see **12B**, **Turbocharging**, **Turbocharger: Removal - Refitting**, page **12B-4**) ,
- the exhaust gas recirculation metal tube (**1**) ,
- the EGR unit mounting bolts (**4**) ,
- the EGR unit,
- the manifold mounting nuts (**5**) ,
- the manifold.

B84 or C84 or G84 or S84, and K9K, and 722 or 728 or 729

REFITTING

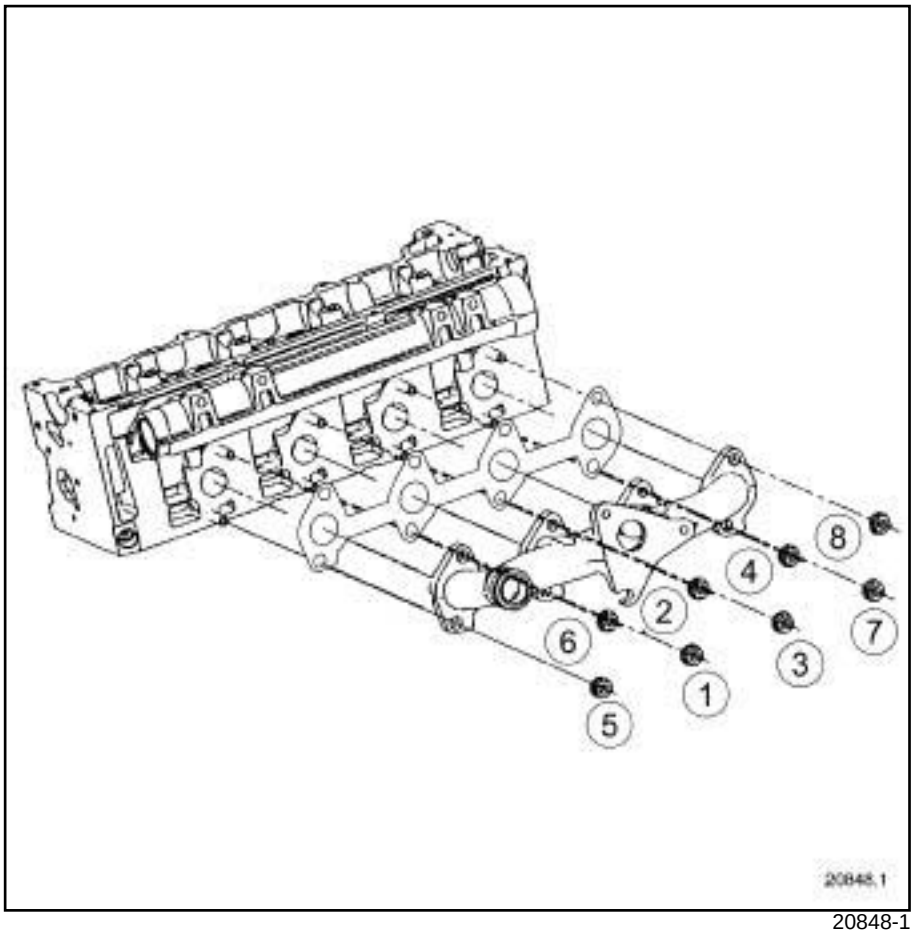

20848-1

- ❑ Replace the manifold gasket.
- ❑ Torque tighten the **exhaust manifold studs (9 Nm)**.
- ❑ Refit the manifold.
- ❑ Torque tighten in order the **exhaust manifold mounting nuts (26 Nm)**.
- ❑ Fit:
  - the EGR unit,
  - the new exhaust gas recirculation unit tube,
  - the new clips on the new exhaust gas recirculation unit tube.
- ❑ Tighten the new clips using the **(Mot. 1567)**.
- ❑ Torque tighten:
  - the **exhaust gas recirculation unit mounting bolts (21 Nm)**,
  - the **air inlet metal tube mounting bolts (21 Nm)**,
  - the **lifting eye (21 Nm)**.
- ❑ Proceed in the reverse order to removal.
- ❑ Refit the turbocharger (see **12B**, **Turbocharging**, **Turbocharger: Removal - Refitting**, page **12B-4**) .
- ❑ Connect the battery (see **Battery : Removal - Refitting**) (MR 364, 80A, Battery).
- ❑ Torque tighten the **battery cover mounting bolts (4 Nm)**.

Exhaust manifold: Removal - Refitting

B84 or C84 or G84 or S84, and K4J – B84 or C84 or G84 or S84, and K4M

Essential special tooling	
Mot. 1495-01	22 mm socket for removing/ refitting oxygen sensors.

Tightening torques ▽	
manifold nuts	**23 Nm**
heat shield bolt	**12 Nm**
oxygen sensors	**45 Nm**
exhaust pipe support bolts on the body	**21 Nm**
exhaust bracket nuts	**20 Nm**

REMOVAL

❑ Position the vehicle on a two-post lift (see **Vehicle: Towing and lifting**) (MR 364, 02A, Lifting equipment).

❑ Disconnect the battery (see **Battery: Removal - Refitting**) (MR 364, 80A, Battery).

K4J

❑ Remove the air filter box (see **12A**, **Fuel mixture**, **Air filter unit: Removal - Refitting**, page **12A-11**) .

K4M

❑ Remove the inlet manifold (see **12A**, **Fuel mixture**, **Inlet manifold: Removal - Refitting**, page **12A-49**) .

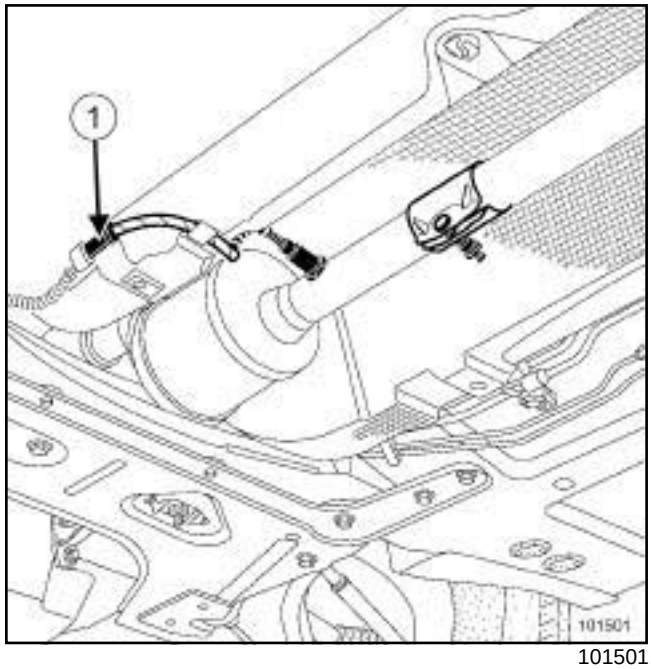

101501

❑ Disconnect the downstream oxygen sensor (**1**) .

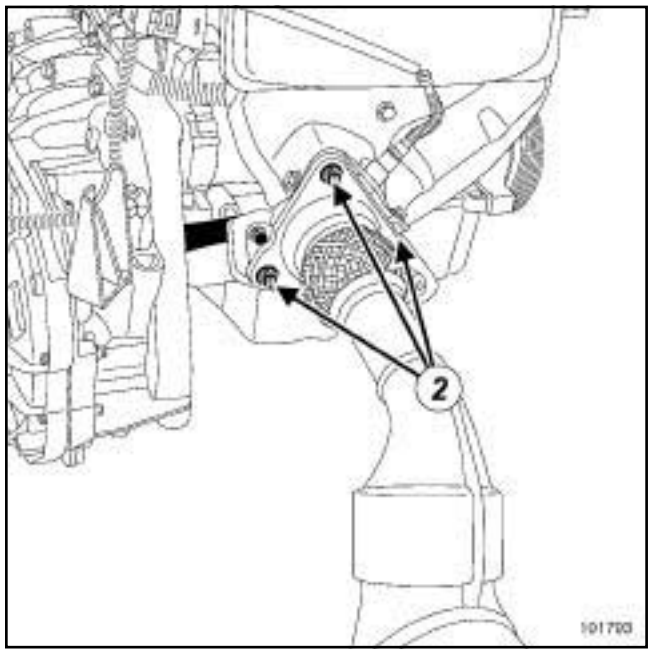

101793

❑ Remove:

- the nuts (**2**) from the exhaust flange,

- the exhaust manifold stay.

Note:

Mark with a pen the position of the exhaust rubber mounting bush supports on the vehicle body.

B84 or C84 or G84 or S84, and K4J – B84 or C84 or G84 or S84, and K4M

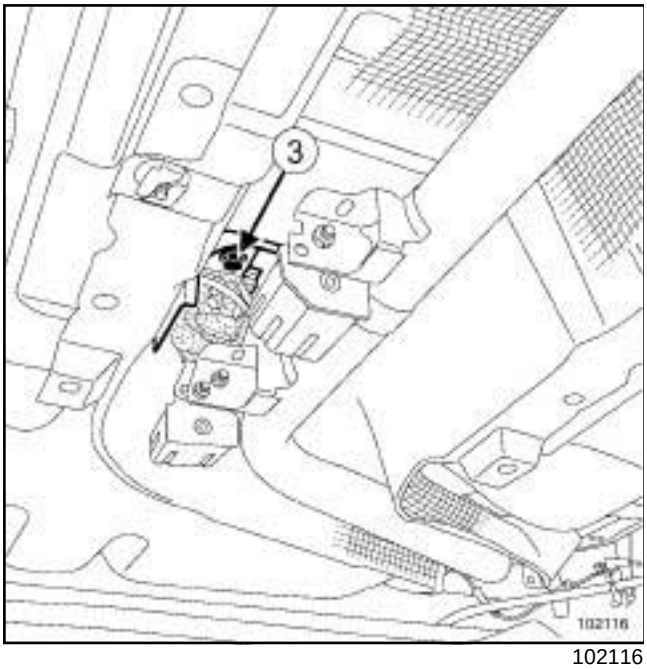

102116

❑ Remove the exhaust pipe rubber mounting bush support bolt (**3**) on the body.

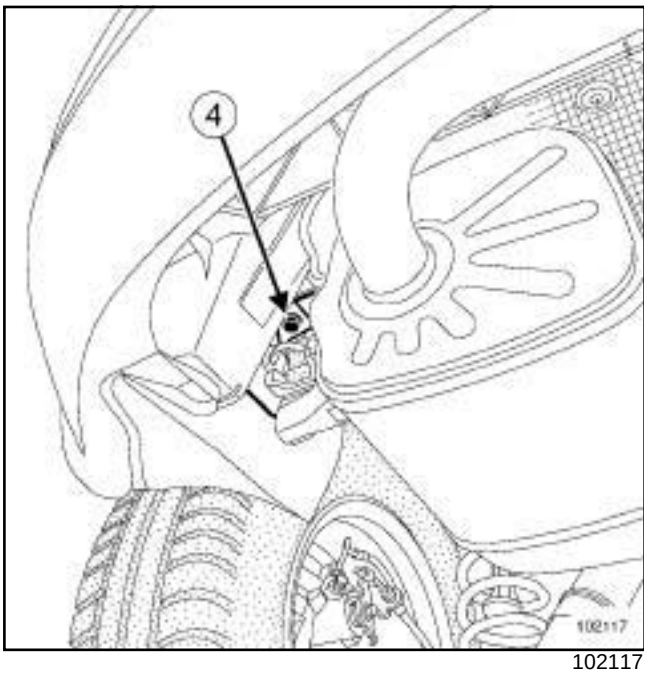

102117

❑ Remove the silencer rubber mounting bush bolt (**4**) on the body.

❑ Withdraw the exhaust pipe towards the rear of the vehicle.

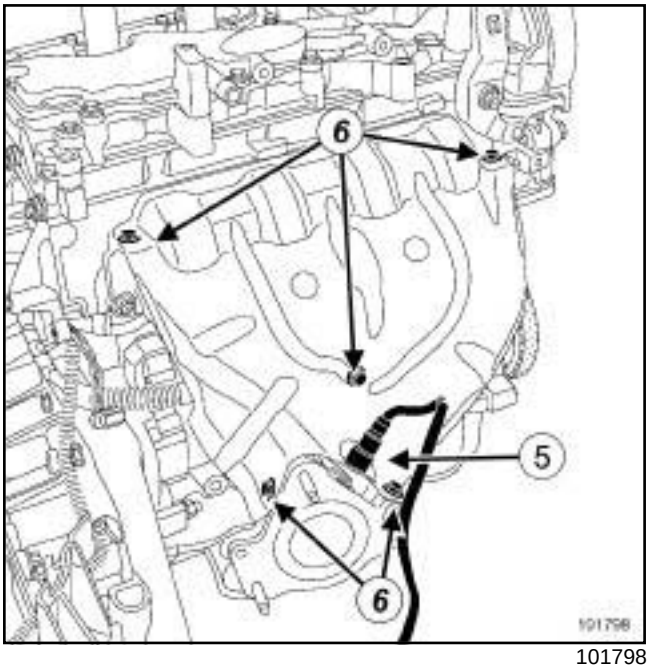

101798

❑ Remove the oxygen sensor (**5**) using the **(Mot. 1495-01)**.

❑ Remove the exhaust manifold upper heat shield (**6**) .

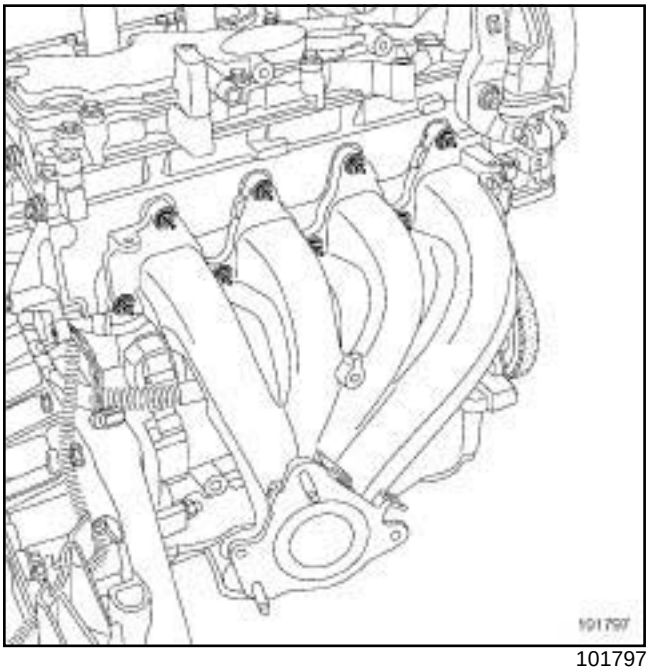

101797

❑ Remove:

- the exhaust manifold nuts,
- the exhaust manifold.

ON THE WORKBENCH

❑ Remove the lower heat shield.

B84 or C84 or G84 or S84, and K4J – B84 or C84 or G84 or S84, and K4M

REFITTING

❏ Always replace:

- the manifold gaskets,
- the exhaust bracket gaskets,
- the manifold nuts.

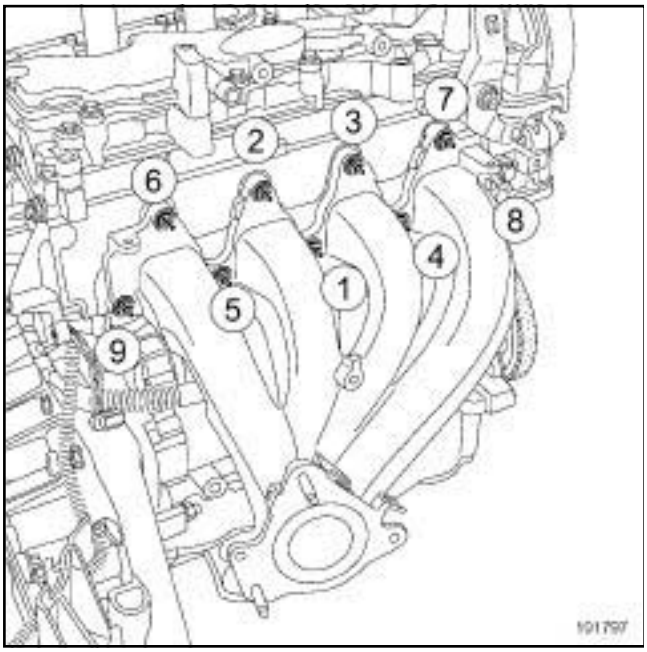

101797

❏ Proceed in the reverse order to removal.

❏ Torque tighten and in order:

- the **manifold nuts (23 Nm)**,
- the **heat shield bolt (12 Nm)**,
- the **oxygen sensors (45 Nm)**,
- the **exhaust pipe support bolts on the body (21 Nm)**,
- the **exhaust bracket nuts (20 Nm)**.

❏ Connect the battery (see **Battery : Removal - Refitting**) (MR 364, 80A, Battery).

Exhaust manifold: Removal - Refitting

B84 or C84 or G84 or S84, and F4R, and 770 or 771

Essential special tooling	
Mot. 1495-01	22 mm socket for removing/ refitting oxygen sensors.

Tightening torques ▽	
manifold nuts	**18 Nm**
heat shield bolt	**10 Nm**
oxygen sensors	**45 Nm**
exhaust pipe mounting bolts on the body	**21 Nm**
gearbox exhaust manifold strut bolt	**21 Nm**
exhaust bracket nuts	**20 Nm**
battery cover mounting bolts	**4 Nm**

REMOVAL

❑ Position the vehicle on a two-post lift (see **Vehicle: Towing and lifting**) (MR 364, 02A, Lifting equipment).

❑ Disconnect the battery (see **Battery: Removal - Refitting**) (MR 364, 80A, Battery).

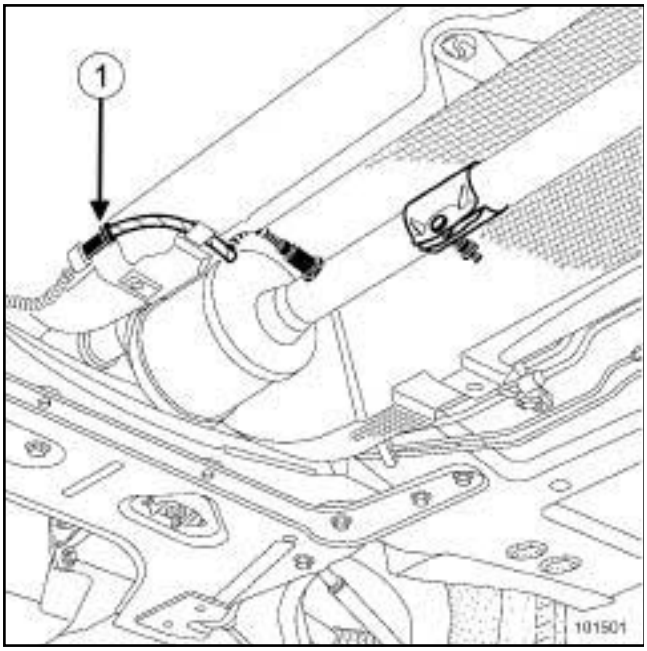

101501

❑ Disconnect the downstream oxygen sensor (**1**) .

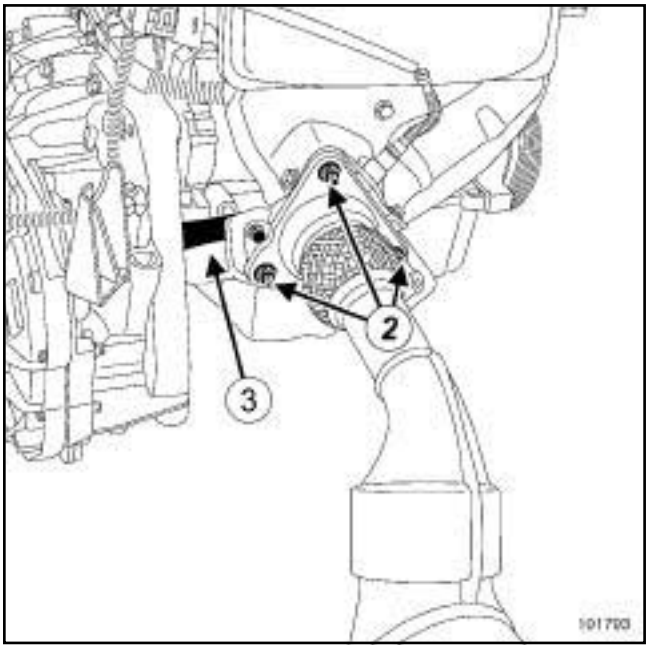

101793

❑ Remove:

- the exhaust bracket mounting nuts (**2**) ,

- the exhaust manifold strut (**3**) .

> Note:
>
> Mark with a pen the position of the exhaust rubber mounting bush supports on the vehicle body.

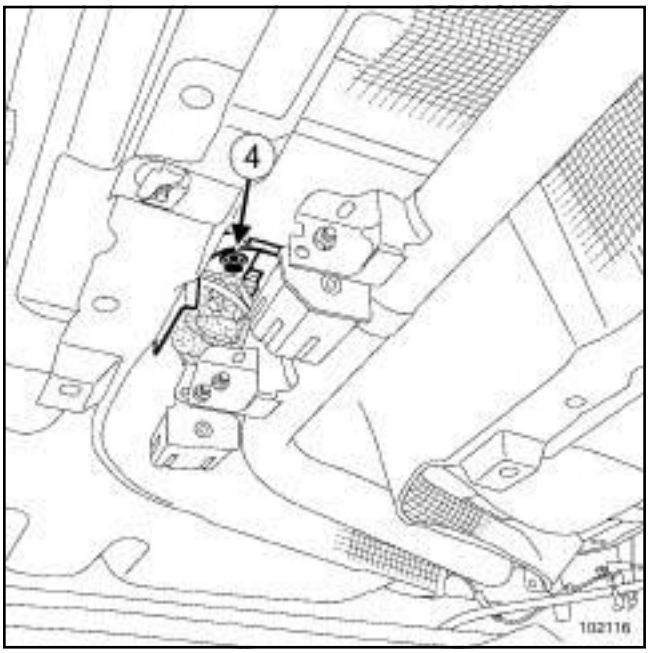

102116

❑ Remove the mounting bolt (**4**) from the exhaust pipe rubber mounting bush support on the body.

B84 or C84 or G84 or S84, and F4R, and 770 or 771

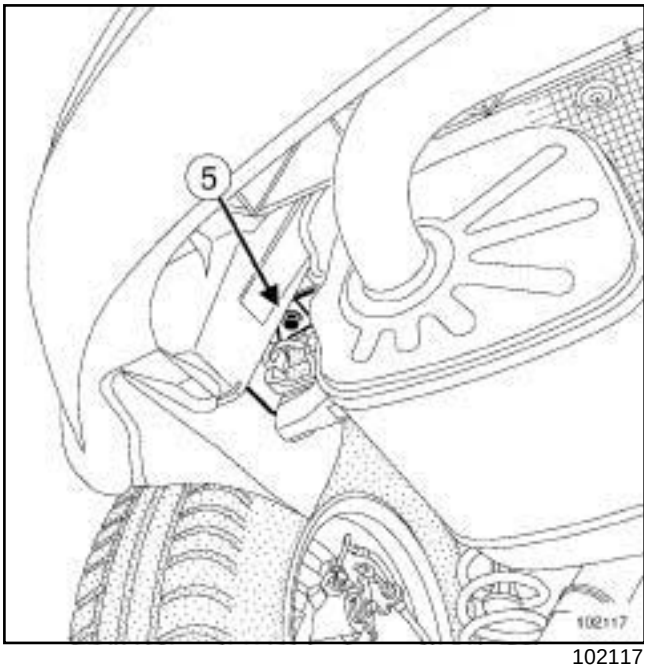

102117

❑ Remove the mounting bolt (**5**) from the silencer rubber mounting bush support on the body.

❑ Withdraw the exhaust pipe towards the rear of the vehicle.

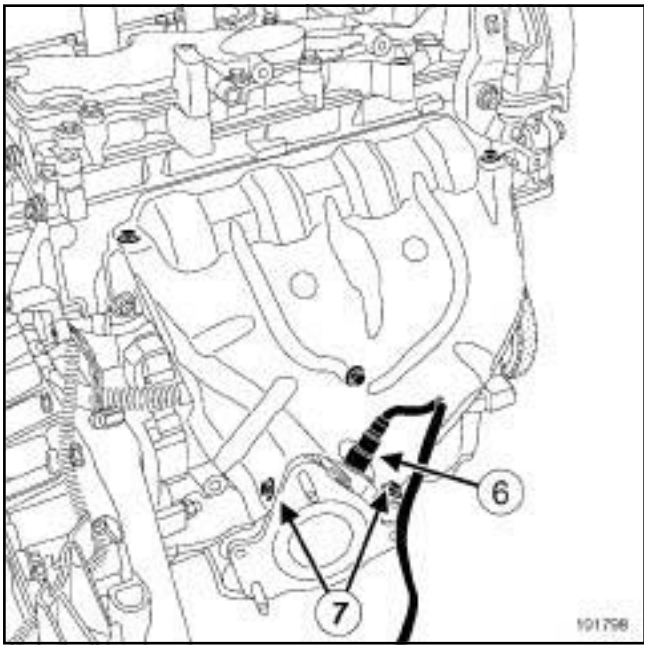

101798

❑ Remove the oxygen sensor (**6**) using the **(Mot. 1495-01)**.

❑ Remove the exhaust manifold upper heat shield (**7**) .

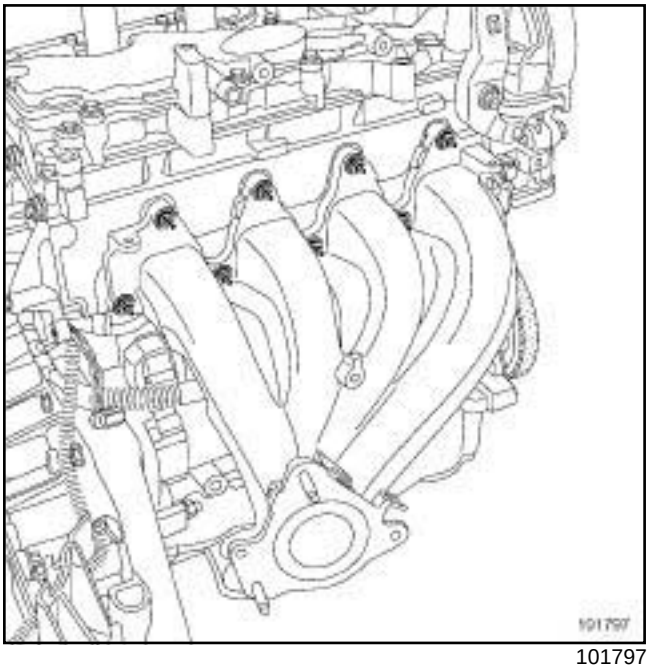

101797

❑ Remove:

- the exhaust manifold mounting nuts,
- the exhaust manifold.

ON THE WORKBENCH

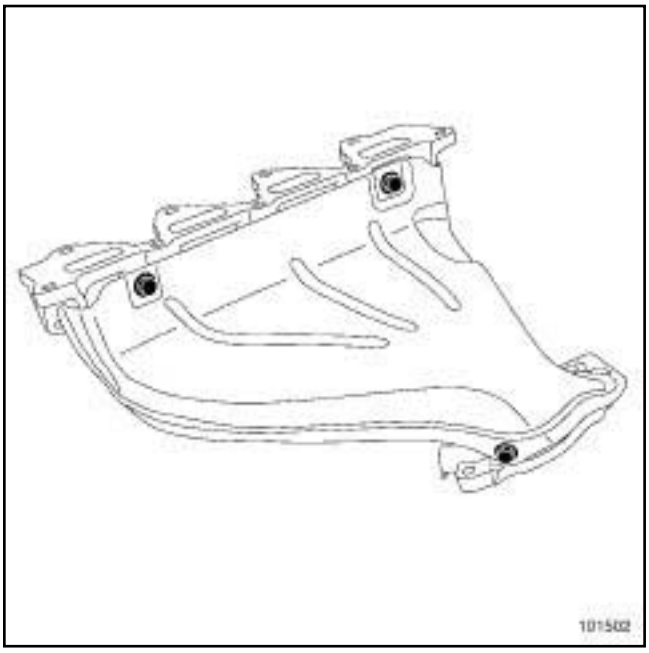

101502

❑ Remove the lower heat shield.

REFITTING

❑ Always replace:

- the manifold gaskets,

B84 or C84 or G84 or S84, and F4R, and 770 or 771

- the exhaust bracket gaskets,
- the manifold nuts.

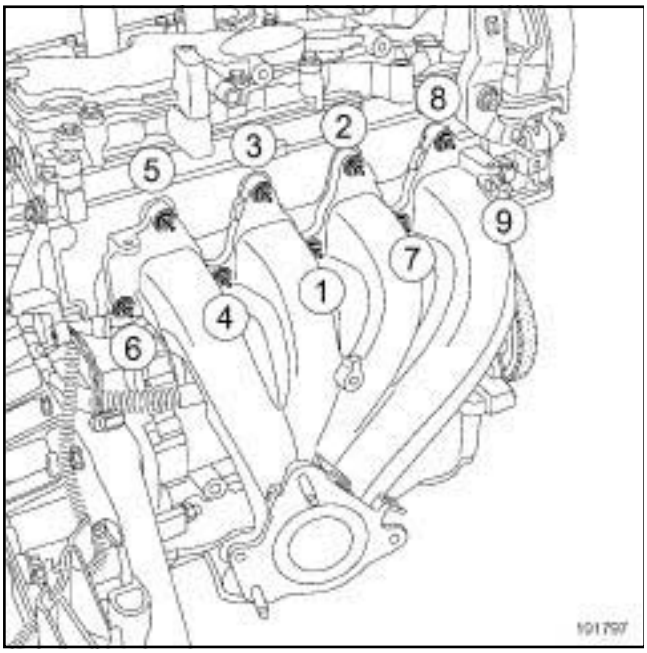

101797

❑ Proceed in the reverse order to removal.

❑ Torque tighten and in order:

- the **manifold nuts (18 Nm)**,
- the **heat shield bolt (10 Nm)**,
- the **oxygen sensors (45 Nm)**,
- the **exhaust pipe mounting bolts on the body (21 Nm)**,
- the **gearbox exhaust manifold strut bolt (21 Nm)**,
- the **exhaust bracket nuts (20 Nm)**.

❑ Connect the battery (see **Battery : Removal - Refitting**) (MR 364, 80A, Battery).

❑ Torque tighten the **battery cover mounting bolts (4 Nm)**.

Exhaust manifold: Removal - Refitting

B84 or C84 or G84 or S84, and F4R, and 776

Tightening torques ▽	
exhaust manifold mounting nuts	**20 Nm**
battery cover mounting bolts	**4 Nm**

REMOVAL

❑ Disconnect the battery (see **Battery: Removal - Refitting**) (MR 364, 80A, Battery).

❑ Remove:

- the engine and transmission assembly (see **10A**, **Engine and cylinder block assembly**, **Engine/ gearbox assembly: Removal - Refitting**, page **10A-97**) ,
- the turbocharger (see **12B**, **Turbocharging**, **Turbocharger: Removal - Refitting**, page **12B-4**) .

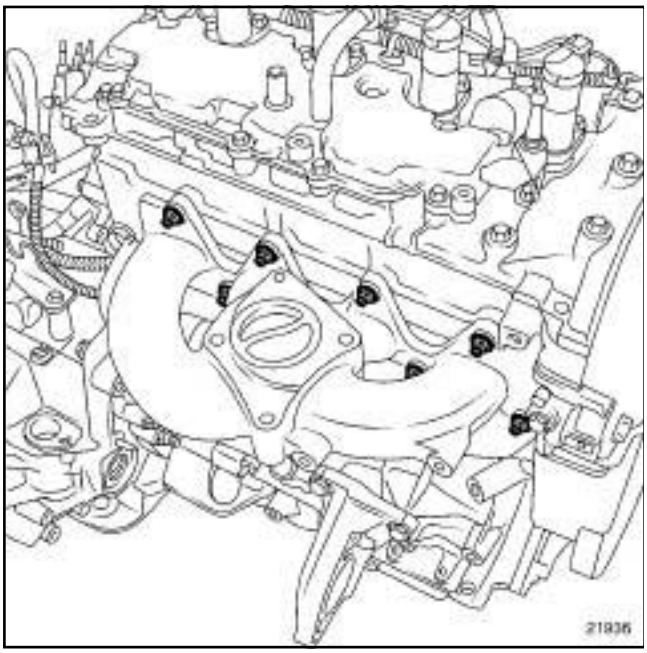

21936

❑ Remove:

- the exhaust manifold mounting nuts,
- the exhaust manifold.

REFITTING

❑ Proceed in the reverse order to removal.

WARNING

Always replace:

- the exhaust manifold sealing ring,
- the exhaust manifold mounting nuts.

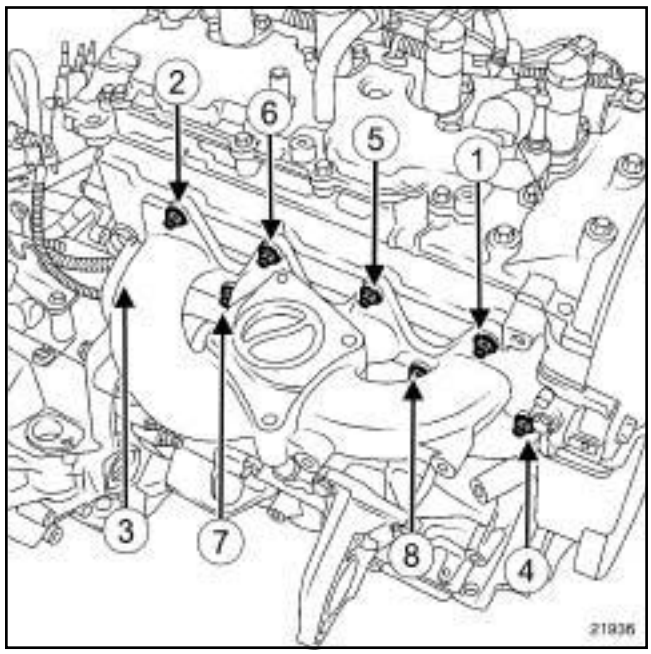

21936

❑ Tighten to torque and in order the **exhaust manifold mounting nuts (20 Nm)**.

❑ Refit:

- the turbocharger (see **12B**, **Turbocharging**, **Turbocharger: Removal - Refitting**, page **12B-4**) ,
- the engine and transmission assembly (see **10A**, **Engine and cylinder block assembly**, **Engine/ gearbox assembly: Removal - Refitting**, page **10A-97**) .

❑ Connect the battery (see **Battery : Removal - Refitting**) (MR 364, 80A, Battery).

❑ Torque tighten the **battery cover mounting bolts (4 Nm)**.

WARNING

Strict adherence to the repair procedures is required for the removal and refitting of the turbocharger in order to seal the system **FAILURE TO COMPLY WITH THESE INSTRUCTIONS MAY HAVE SERIOUS SAFETY-RELATED CONSEQUENCES**.

Exhaust manifold: Removal - Refitting

B84 or C84 or G84 or S84, and K9K, and 732 or 734

Tightening torques ▽	
exhaust manifold studs	**9 N.m**
exhaust manifold nuts	**26 N.m**
exhaust gas recirculation assembly bolts	**25 N.m**

REMOVAL

I - REMOVAL PREPARATION OPERATION

❏ Position the vehicle on a two-post lift (see **Vehicle: Towing and lifting**) (02A, Lifting equipment).

❏ Disconnect the battery (see **Battery: Removal - Refitting**) (80A, Battery).

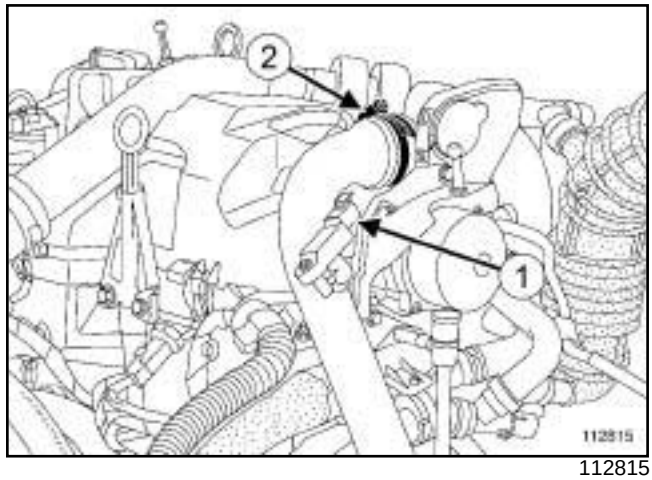

112815

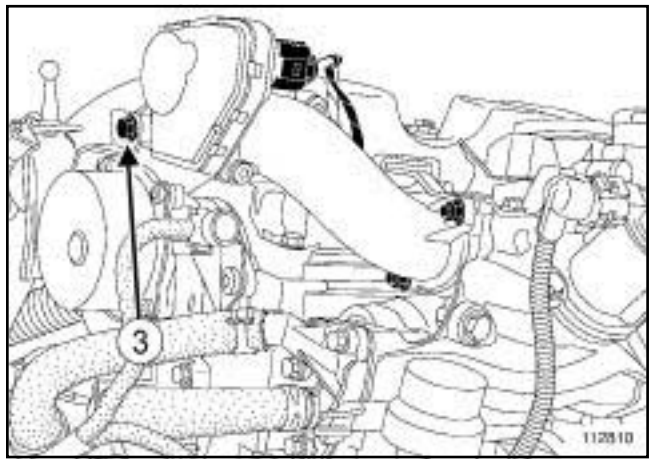

112810

❏ Disconnect the inlet pressure sensor connector (**1**) .

❏ Loosen the clip (**2**) on the intercooler outlet air pipe.

❏ Move the intercooler outlet air pipe to one side.

❏ Remove:

- the damper valve bolt (**3**) ,
- the engine undertray,
- the catalytic converter (see **19B**, **Exhaust**, **Catalytic converter: Removal - Refitting**, page **19B-46**) ,
- the turbocharger (see **12B**, **Turbocharging**, **Turbocharger: Removal - Refitting**, page **12B-4**) ,
- the bolts from the lifting eye, timing end,
- the lifting eye on the timing end.

B84 or C84 or G84 or S84, and K9K, and 732 or 734

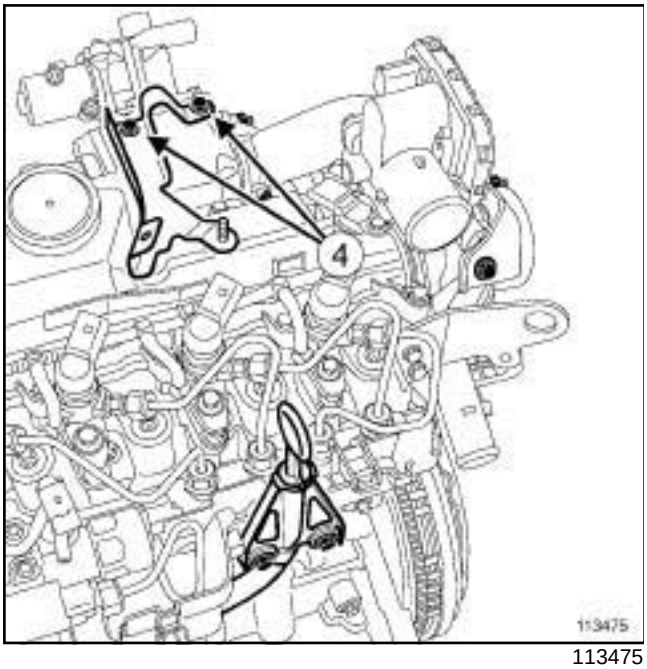

113475

❑ Remove:

- the injector rail protector cover bracket bolts (**4**) ,
- the rigid exhaust gas recirculation pipe (see **14A**, **Antipollution**, **Exhaust gas recirculation rigid pipe: Removal - Refitting**, page **14A-95**) .

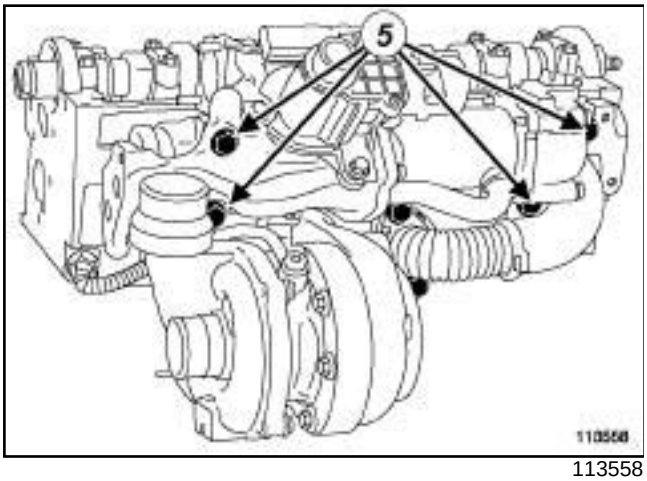

113558

❑ Undo the exhaust gas recirculation assembly bolts (**5**) by a few turns.

❑ Move the exhaust gas recirculation assembly to one side without removing it.

II - OPERATION FOR REMOVAL OF PART CONCERNED

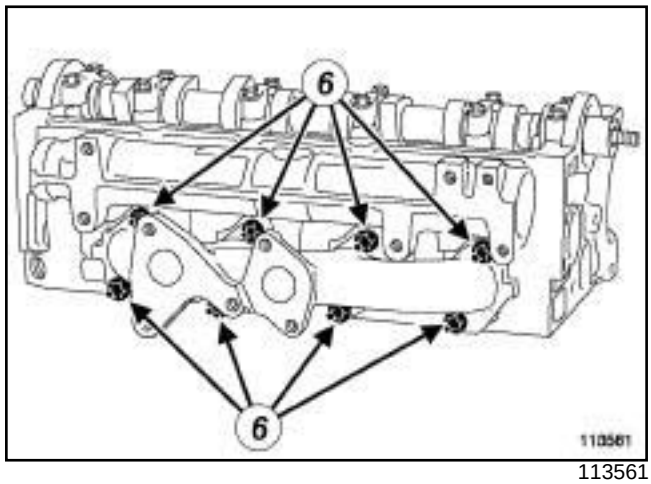

113561

❑ Remove:

- the nuts (**6**) from the exhaust manifold,
- the exhaust manifold.

REFITTING

I - REFITTING PREPARATION OPERATION

❑ **parts always to be replaced: exhaust manifold seal (10,07,02,07)**

❑ Use **ABRASIVE PADS** to clean the joint face:

- the cylinder head,
- of the exhaust manifold, if it is to be reused.

❑ Use **SURFACE CLEANER** (see **Vehicle: Parts and consumables for repair**) (04B, Consumables - Products) and **CLEAN CLOTHS** to clean and de-grease the joint faces:

- the cylinder head,
- of the exhaust manifold, if it is to be reused.

B84 or C84 or G84 or S84, and K9K, and 732 or 734

II - REFITTING OPERATION FOR PART CONCERNED

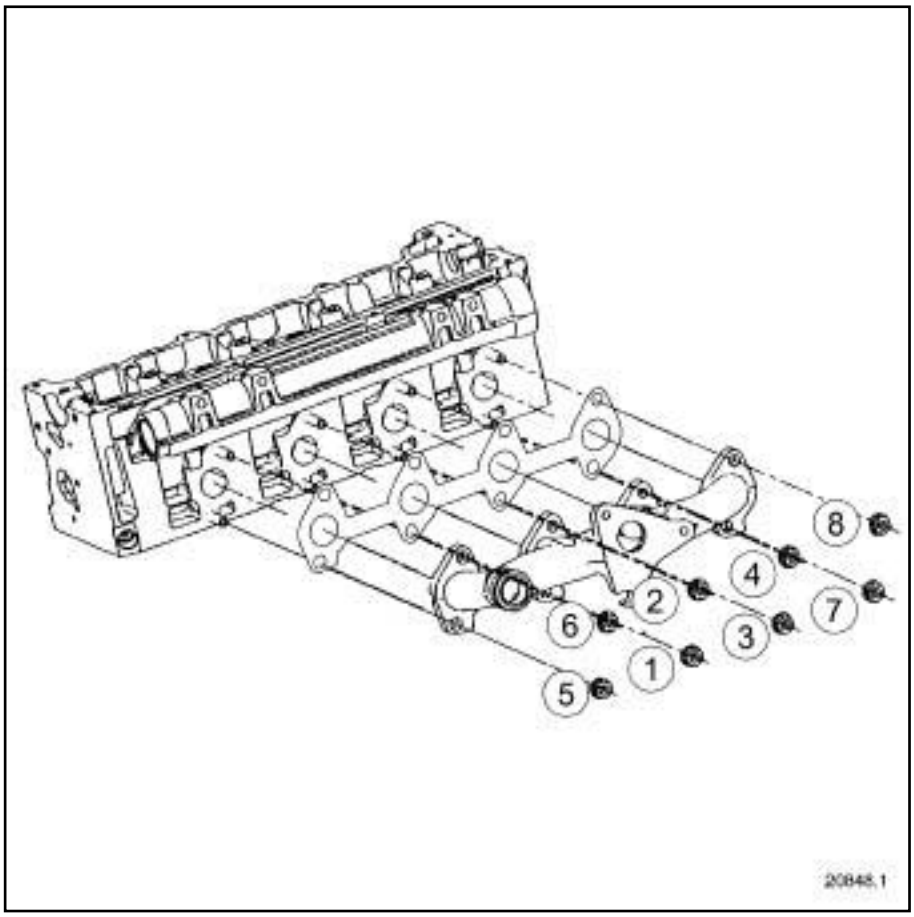

20848-1

- ❑ Torque tighten the **exhaust manifold studs (9 N.m)**.
- ❑ Fit the new exhaust manifold gasket.
- ❑ Refit the exhaust manifold.
- ❑ Torque tighten in order the **exhaust manifold nuts (26 N.m)**.

III - FINAL OPERATION

- ❑ Fit the exhaust gas recirculation assembly.
- ❑ Torque tighten the **exhaust gas recirculation assembly bolts (25 N.m)**.
- ❑ Refit the rigid exhaust gas recirculation pipe (see **14A**, **Antipollution**, **Exhaust gas recirculation rigid pipe: Removal - Refitting**, page **14A-95**) .
- ❑ Refit:
  - the lifting eye on the timing end,
  - the bolts from the lifting eye, timing end,
  - the bolts of the injector rail protector cover mounting bracket,
  - the damper valve bolt,
  - the turbocharger (see **12B**, **Turbocharging**, **Turbocharger: Removal - Refitting**, page **12B-4**) ,
  - the catalytic converter (see **19B**, **Exhaust**, **Catalytic converter: Removal - Refitting**, page **19B-46**) ,
  - the engine undertray.
- ❑ Connect the damper valve connector.
- ❑ Refit the intercooler air outlet pipe.
- ❑ Tighten the clip on the intercooler air outlet pipe.
- ❑ Connect the inlet pressure sensor connector.
- ❑ Connect the battery (see **Battery : Removal - Refitting**) (80A, Battery).
- ❑ Refit the engine covers.

B84 or C84, and F4R, and 774

Tightening torques ▽	
exhaust manifold mounting nuts	**20 Nm**

REMOVAL

❑ Disconnect the battery (see **Battery: Removal - Refitting**) (MR 364, 80A, Battery).

❑ Remove:

- the engine and gearbox assembly (see **10A**, **Engine and cylinder block assembly**, **Engine/gearbox assembly: Removal - Refitting**, page **10A-97**) ,
- the turbocharger (see **12B**, **Turbocharging**, **Turbocharger: Removal - Refitting**, page **12B-4**) .

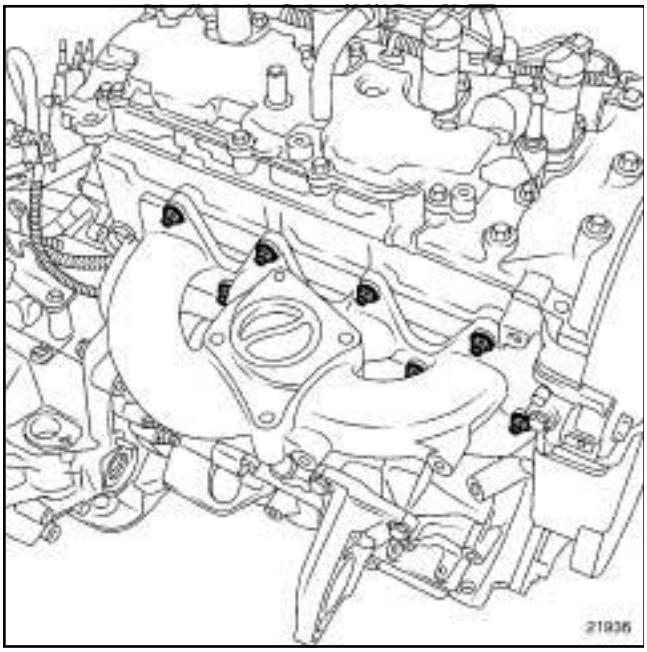

21936

❑ Remove:

- the mounting nuts on the manifold,
- the exhaust manifold.

REFITTING

❑ Proceed in the reverse order to removal.

❑ Always replace:

- the seal,
- the exhaust manifold mounting nuts.

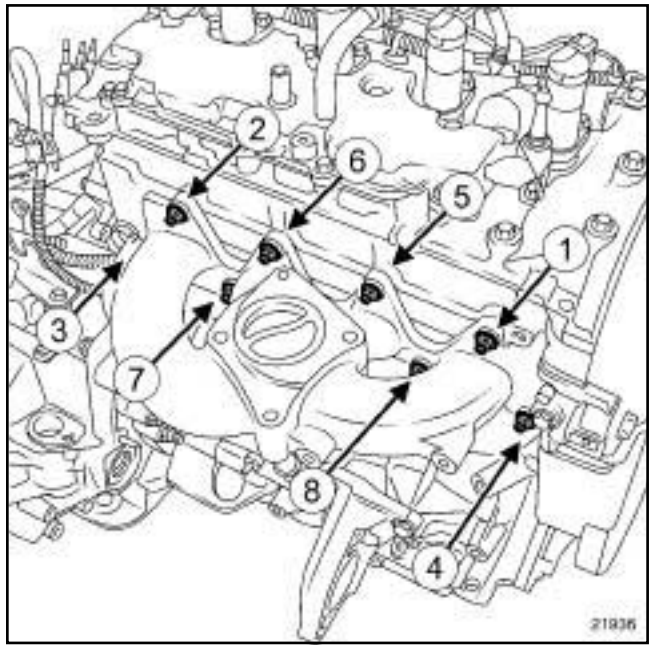

21936

❑ Tighten to torque and in order the **exhaust manifold mounting nuts (20 Nm)**.

WARNING

Removal and refitting of the turbocharger requires careful application of the repair procedures to ensure that the system is sealed correctly. Failure to comply with these instructions may have serious safety-related consequences for the driver.

❑ Connect the battery (see **Battery : Removal - Refitting**) (MR 364, 80A, Battery).

B84 or C84 or G84 or S84, and K9K, and 724

Tightening torques ▽	
exhaust manifold studs	**9 N.m**
exhaust manifold nuts	**25 N.m**

REMOVAL

I - REMOVAL PREPARATION OPERATION

❏ Position the vehicle on a two-post lift (see **Vehicle: Towing and lifting**) (02A, Lifting equipment).

❏ Disconnect the battery (see **Battery: Removal - Refitting**) (80A, Battery).

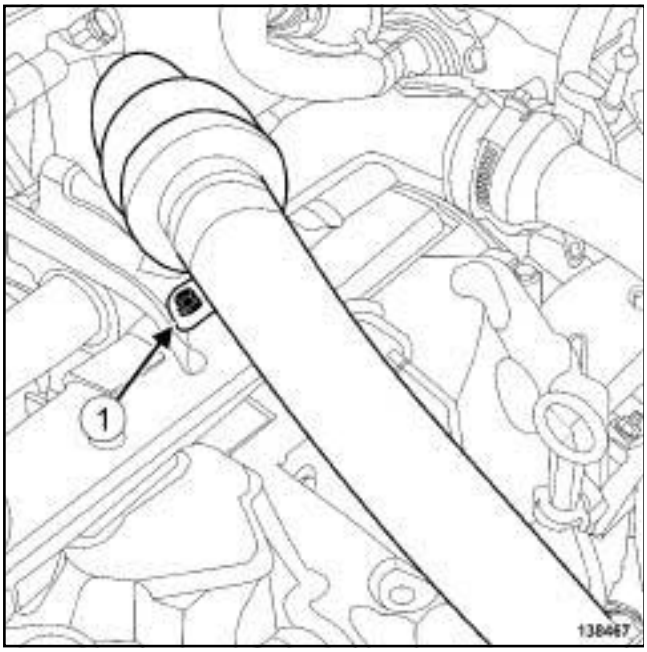

138467

❏ Remove the bolt (**1**) on the intercooler air inlet pipe.

123299

❏ Pull the clip (**2**) from the intercooler inlet air pipe.

❏ Disconnect the intercooler air inlet pipe.

❏ Remove the intercooler inlet air pipe.

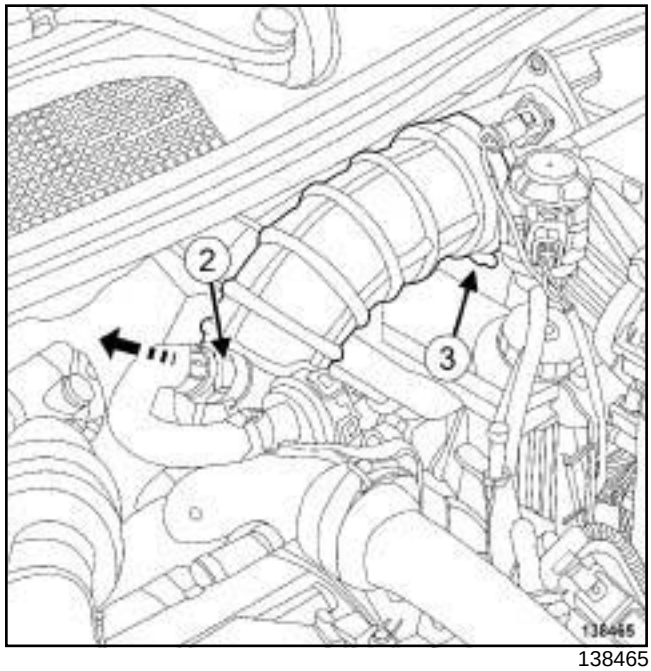

138465

❏ Unclip the oil vapour rebreathing pipe (**3**) .

❏ Undo:

- the clip (**4**) of the air filter unit air outlet pipe at the air filter unit end,
- the clip of the air filter unit air outlet pipe at the turbocharger end.

B84 or C84 or G84 or S84, and K9K, and 724

❑ Remove:

- the air outlet pipe of the air filter unit,
- the engine undertray bolts,
- the engine undertray,
- the catalytic converter (see **19B**, **Exhaust**, **Catalytic converter: Removal - Refitting**, page **19B-46**) ,
- the turbocharger oil pipes (see **12B**, **Turbocharging**, **Turbocharger oil pipe: Removal - Refitting**, page **12B-52**) ,
- the turbocharger (see **12B**, **Turbocharging**, **Turbocharger: Removal - Refitting**, page **12B-4**) .

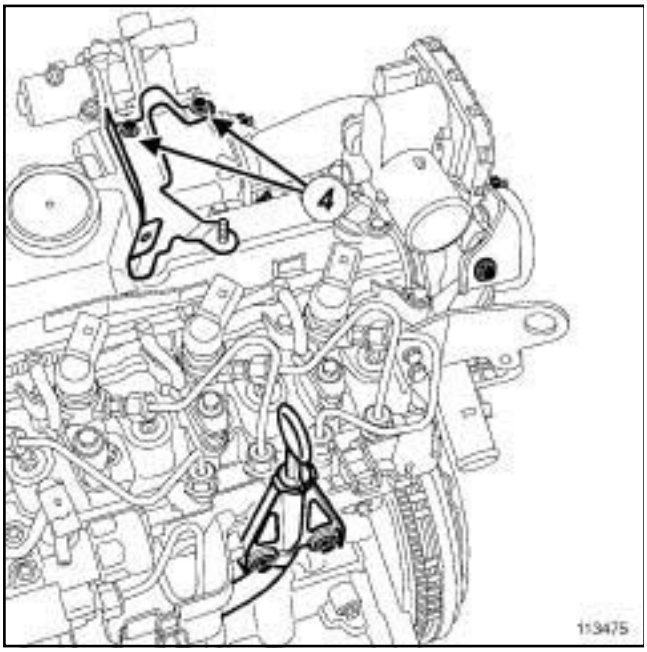

113475

❑ Remove:

- the injector rail cover bracket bolts (**5**) ,
- the rigid exhaust gas recirculation pipe (see **14A**, **Antipollution**, **Exhaust gas recirculation rigid pipe: Removal - Refitting**, page **14A-95**) .

II - OPERATION FOR REMOVAL OF PART CONCERNED

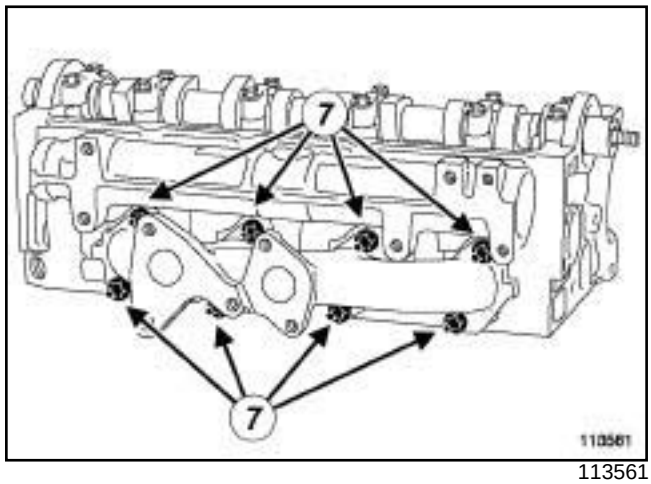

113561

❑ Remove:

- the nuts (**6**) from the exhaust manifold,
- the exhaust manifold.

REFITTING

I - REFITTING PREPARATION OPERATION

❑ **parts always to be replaced: exhaust manifold seal (10,07,02,07)**

❑ Use **ABRASIVE PADS** to clean the joint face:

- the cylinder head,
- of the exhaust manifold, if it is to be reused.

❑ Use **SURFACE CLEANER** (see **Vehicle: Parts and consumables for repair**) (04B, Consumables - Products) and **CLEAN CLOTHS** to clean and degrease the joint faces:

- the cylinder head,
- of the exhaust manifold, if it is to be reused.

B84 or C84 or G84 or S84, and K9K, and 724

II - REFITTING OPERATION FOR PART CONCERNED

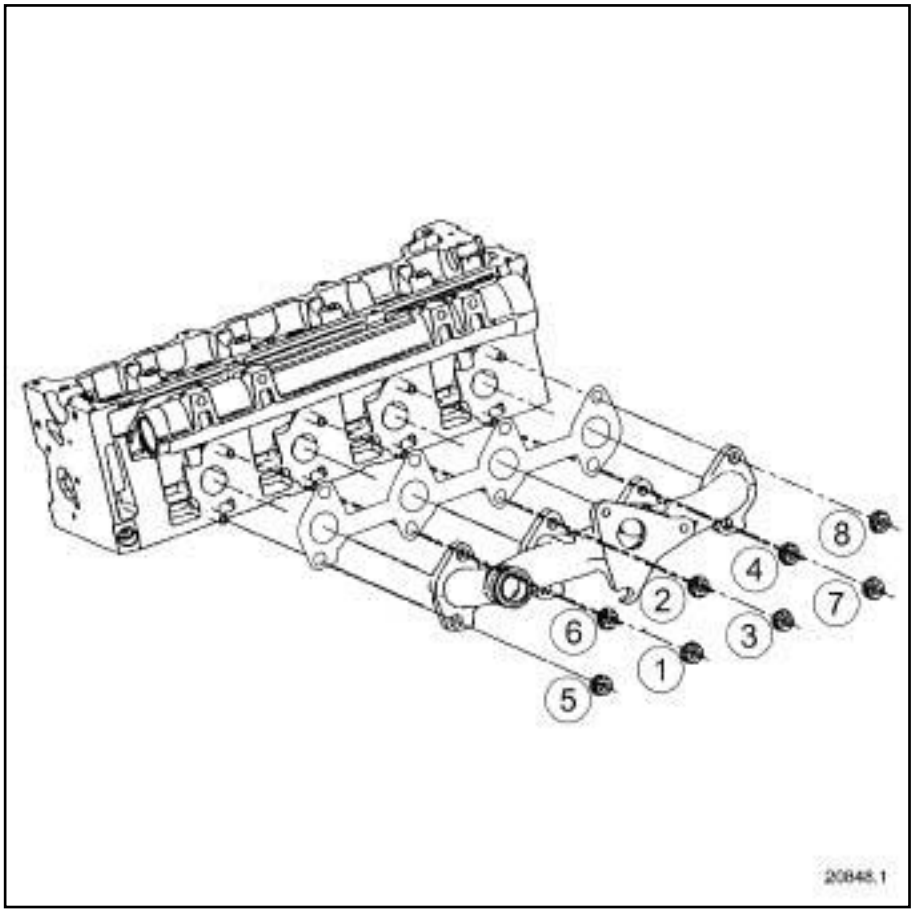

20848-1

- ❑ Torque tighten the **exhaust manifold studs (9 N.m)**.
- ❑ Fit the new exhaust manifold gasket.
- ❑ Refit the exhaust manifold.
- ❑ Tighten to torque and in order the **exhaust manifold nuts (25 N.m)**.

III - FINAL OPERATION

- ❑ Refit:
  - the turbocharger (see **12B**, **Turbocharging**, **Turbocharger: Removal - Refitting**, page **12B-4**) ,
  - the turbocharger oil pipes (see **12B**, **Turbocharging**, **Turbocharger oil pipe: Removal - Refitting**, page **12B-52**) ,
  - the catalytic converter (see **19B**, **Exhaust**, **Catalytic converter: Removal - Refitting**, page **19B-46**) ,
  - the engine undertray,
  - the air outlet pipe of the air filter unit.
- ❑ Clip:
  - the oil vapour rebreathing pipe,
  - the clip of the intercooler air inlet pipe.
- ❑ Refit the bolt on the intercooler air inlet pipe.
- ❑ Connect the battery (see **Battery : Removal - Refitting**) (80A, Battery).
- ❑ Refit the engine cover.

F4R or F9Q or K9K or M9R

Essential equipment
parts washer

I - TURBOCHARGER: GENERAL INSTRUCTIONS

For the turbocharging pressure regulator check (see **Fault finding - Tests**) (Technical Note 3419A, 12B, Turbocharging).

WARNING
The turbocharger pressure regulator rod must not be adjusted.

II - TURBOCHARGER CIRCUIT DIAGRAM

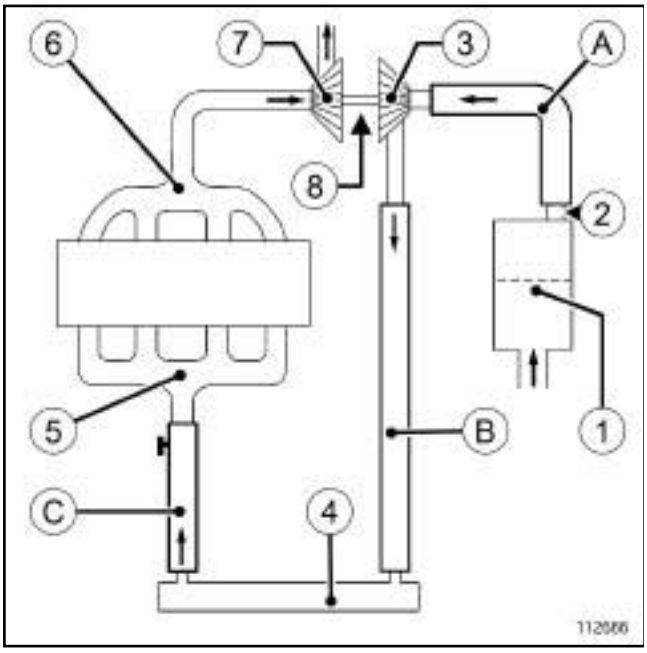

112666

(**1**)	Air filter unit
(**2**)	Air flowmeter
(**3**)	Compressor wheel
(**4**)	Intercooler
(**5**)	Inlet manifold
(**6**)	Exhaust manifold
(**7**)	Turbine wheel
(**8**)	Bearing system (bearing + wheel shaft)
(**A**)	Air filter box air outlet pipe
(**B**)	Turbocharger air outlet pipe
(**C**)	Intercooler air outlet pipe

III - APPLICATION CONDITIONS OF INSTRUCTIONS

The instructions below must be followed when replacing a turbocharger due to mechanical damage:

- damage to the bearing system,
- broken shaft or turbine wheel,
- compressor wheel rubbing against the turbocharger casing,
- broken or damaged compressor wheel,
- extensive clogging of the turbine wheel casing (hard deposits).

FOR THE AIR CIRCUIT:

- Consequences:
  - swarf or metal objects in the turbocharger inlet and outlet pipes,
  - oil in the air circuit (collected in the intercooler).
- Risks (after replacing the turbocharger):
  - metal objects sucked in by the compressor wheel (destruction of the turbocharger).

FOR THE LUBRICATION CIRCUIT:

- Consequences:
  - swarf found in the engine oil circuit,
  - circulation of swarf within the circuit.
- Risks (after replacing the turbocharger):
  - premature wear on the bearing system (destruction of turbocharger).

WARNING
Metal objects may enter the oil and air circuits as a result of a broken turbocharger.

Failure to follow the INSTRUCTIONS listed will lead to the turbocharger breaking again.

INSTRUCTIONS:

- Drain the engine oil (see **10A**, **Engine and cylinder block assembly**, **Engine oil: Draining - Refilling**, page **10A-43**)
- Replace the oil filter (see **10A**, **Engine and cylinder block assembly**, **Oil filter: Removal - Refitting**, page **10A-53**) .
- Replace the seals and fittings,
- Carry out the following only if the compressor wheel is broken or rubbing against the turbocharger casing:
  - Drain the intercooler,

F4R or F9Q or K9K or M9R

• Clean the turbocharger air pipes.

Note:

When carrying out an operation on the air or lubrication circuit, it is necessary to plug the open holes to prevent any risk of foreign bodies entering the system.

IV - AIR CIRCUIT*: INSTRUCTIONS FOLLOWING MECHANICAL DAMAGE TO THE TURBOCHARGER

Note:

(*) These instructions for the air circuit are only to be followed in the case of:

- broken compressor wheel,
- compressor wheel rubbing against the turbocharger casing.

Remove the intercooler if fitted to the vehicle (see **12B**, **Turbocharging**, **Intercooler: Removal - Refitting**, page **12B-69**) .

Turn the intercooler over and allow the oil inside to drain out.

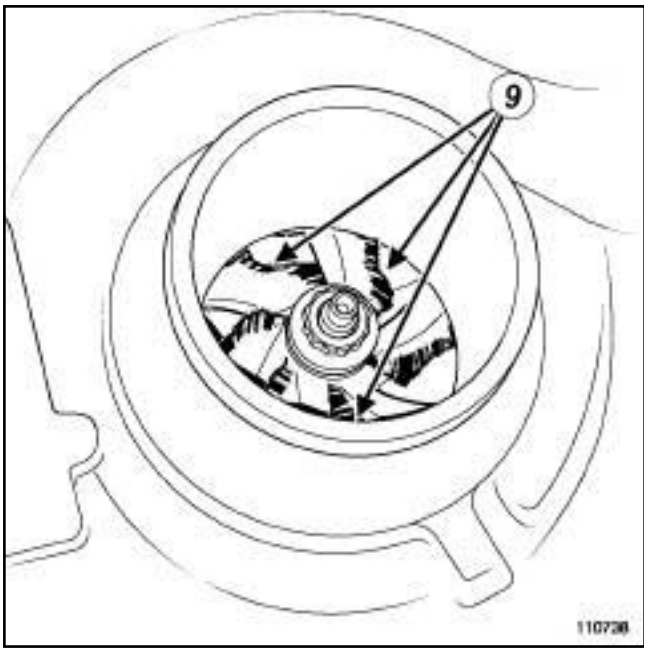

110738

Note:

If the compressor wheel (**9**) is damaged, metal objects are ejected inside the air pipes.

Check that there are no metal objects inside the air flowmeter ***(2)*** .

Remove:

- the air pipe(between the air filter unit and the turbocharger) ***(A)*** ,
- the air pipe ***(B)*** (between the turbocharger and the intercooler).

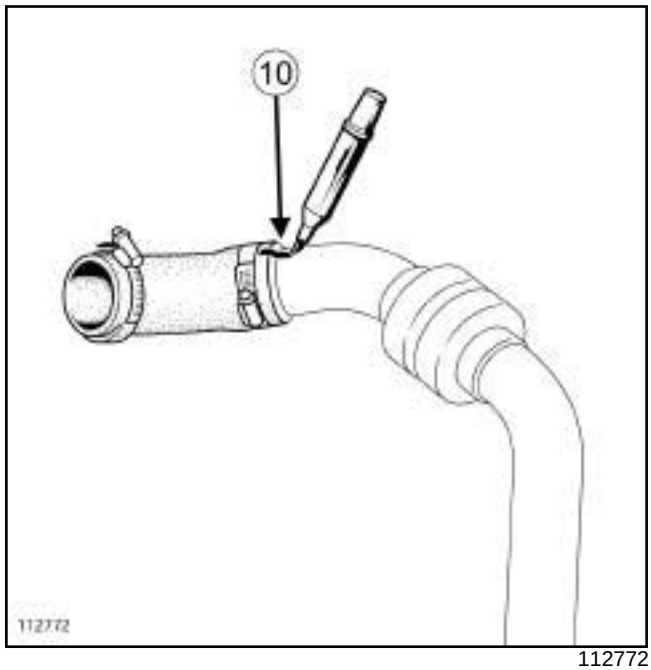

112772

For air pipes comprising several components:

- mark (**10**) the fitting position of each component,
- separate all the components.

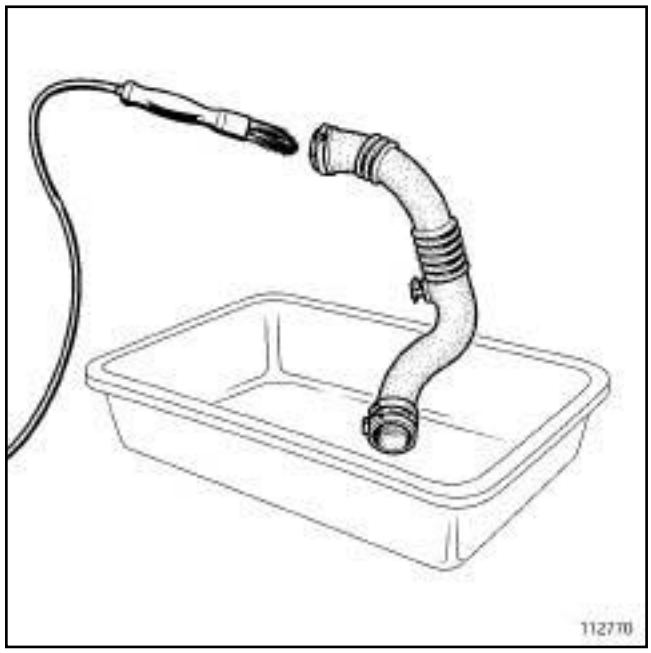

112770

F4R or F9Q or K9K or M9R

One by one, clean the pipes removed with the **parts washer** :

- brush as much of the inside of the pipe as possible (only use brushes with plastic bristles),
- wash plenty of cleaning product from the cleaning station through the pipe,
- allow the cleaned pipe to drain by standing it upright,
- ensure the cleaning product has drained out completely (check areas where liquid may be retained, e.g. gaiters, resonators etc.).

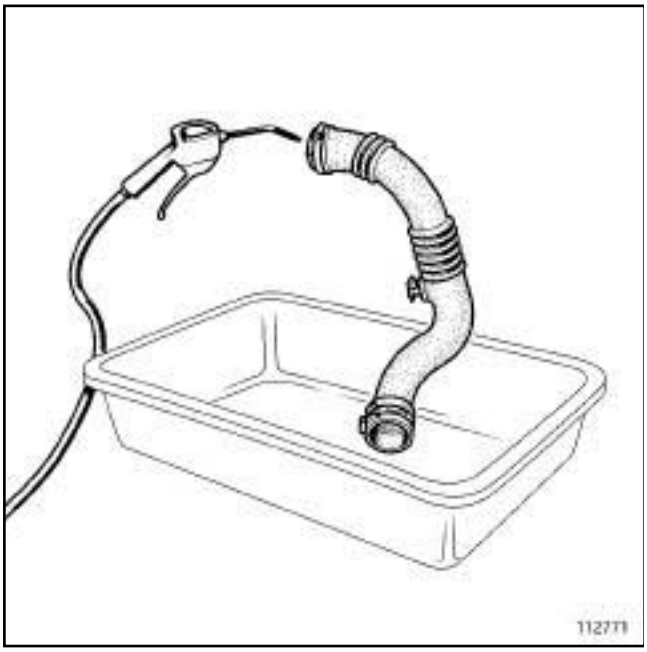

112771

Dry the pipes one by one using a compressed air spray gun.

For pipes comprising several components:

- assemble the components, taking note of their correct fitting position ***(10)*** .

Refit:

- the air pipe(between the air filter unit and the turbocharger) ***(A)*** ,
- the air pipe ***(B)*** (between the turbocharger and the intercooler).

Refit the intercooler, if fitted to the vehicle (see **12B**, **Turbocharging**, **Intercooler: Removal - Refitting**, page **12B-69**) .

V - LUBRICATION CIRCUIT: INSTRUCTIONS FOLLOWING MECHANICAL DAMAGE TO THE TURBOCHARGER**

Note:

(**) These instructions relating to the lubrication circuit must always be followed in all cases of mechanical damage as listed above.

Drain the engine oil (see **10A**, **Engine and cylinder block assembly**, **Engine oil: Draining - Refilling**, page **10A-43**) .

Replace the oil filter (see **10A**, **Engine and cylinder block assembly**, **Oil filter: Removal - Refitting**, page **10A-53**) .

Only fill the engine with a suitable oil type (see **Engine oil: Specifications**) (Technical Note 6013A, 04A, Lubricants).

VI - GENERAL INSTRUCTIONS TO BE FOLLOWED WHEN REMOVING A TURBOCHARGER

Always replace:

- the oil supply pipe:
  - if the pipe is blocked, even partially (due to scale, carbonised oil etc.),
  - if the pipe is fitted with self-retaining seals.
- the oil return pipe:
  - if the pipe is blocked, even partially (due to scale, carbonised oil etc.),
  - if the pipe is fitted with self-retaining seals.
- all seals that have been removed,
- all fittings that have been removed.

WARNING
Failure to observe the following procedure may lead to destruction of the turbocharger.

When starting the engine:

- do not accelerate,
- allow the engine to run for **1 minute**,the time taken for the oil circuit pressure to increase (until the oil pressure warning light on the instrument panel goes out),
- accelerate several times at no load,
- check the air circuit and the oil circuit for leaks.

B84 or C84 or G84 or S84, and K9K, and 722 or 728 or 729

Essential special tooling	
Mot. 1711	Kit for measuring injector leak rate.

Essential equipment
diagnostic tool

Tightening torques ▽	
turbocharger studs on the exhaust manifold	**9 N.m**
turbocharger stud on the turbocharger	**9 N.m**
turbocharger lower nut on the exhaust manifold	**28 N.m**
turbocharger upper nuts on the exhaust manifold	**28 N.m**

REMOVAL

I - REMOVAL PREPARATION OPERATION

❏ Position the vehicle on a two-post lift (see **Vehicle: Towing and lifting**) (02A, Lifting equipment).

❏ Remove the engine covers.

❏ Disconnect the battery (see **Battery: Removal - Refitting**) (80A, Battery).

❏ Remove:

- the engine undertray bolts,
- the engine undertray.

K9K, and 722

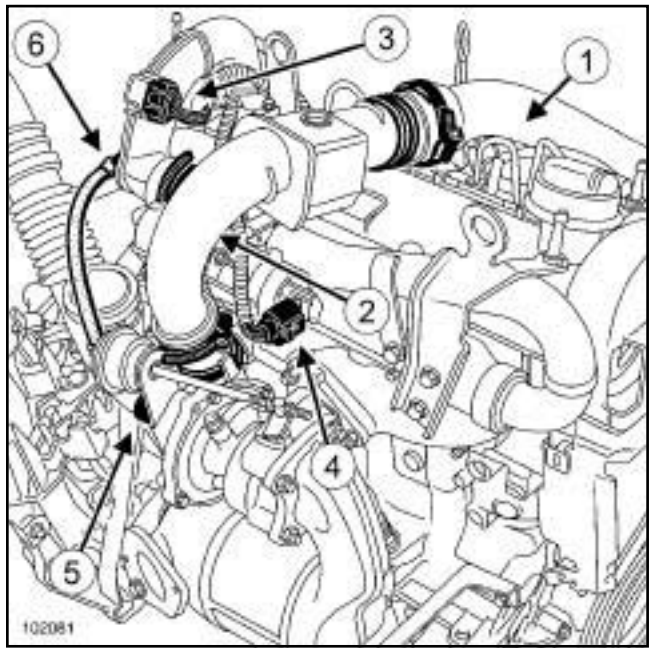

102081

❏ Disconnect the intercooler air inlet pipe (**1**) .

❏ Remove the turbocharger outlet air pipe (**2**) .

❏ Disconnect:

- the turbocharging pressure sensor connector (**3**) ,
- the sensor of the exhaust gas recirculation solenoid valve (**4**) ,
- the air filter unit air outlet pipe (**5**) on the turbocharger,
- the turbocharging pressure regulation valve pipe (**6**) on the air duct.

B84 or C84 or G84 or S84, and K9K, and 722 or 728 or 729

K9K, and 728 or 729

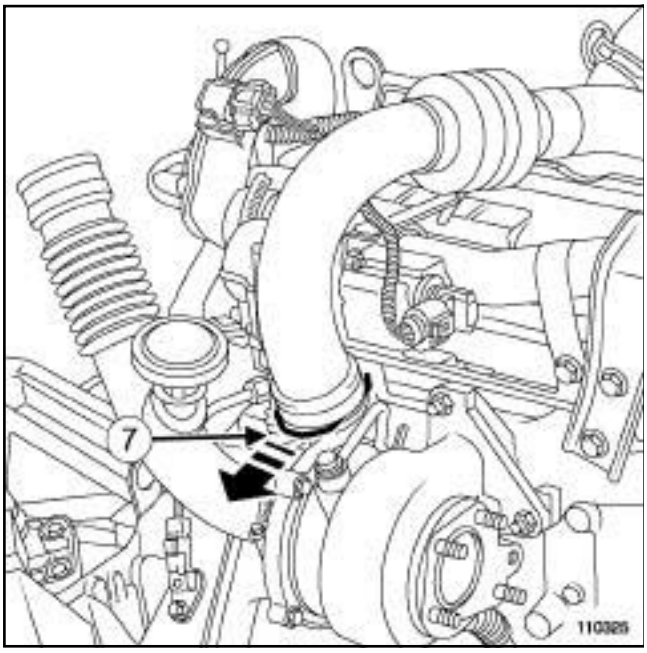

110325

❑ Pull out clip (**7**) .

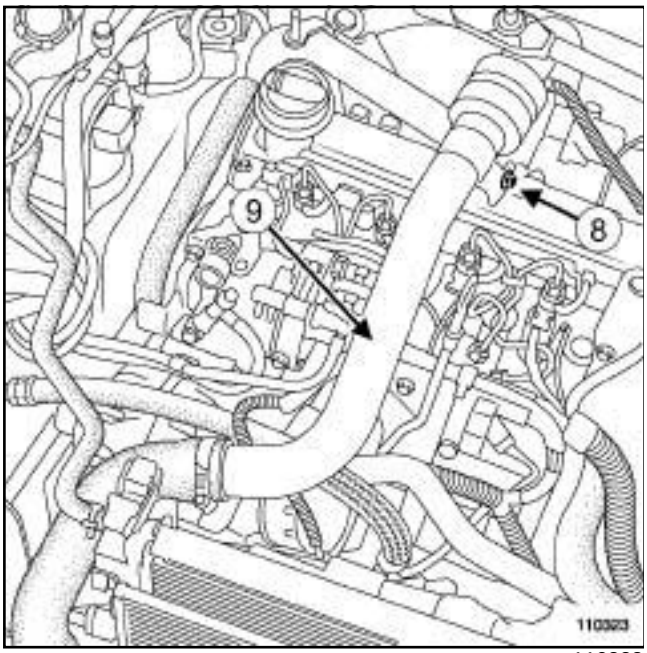

110323

❑ Remove the bolt (**8**) on the intercooler air inlet pipe.

❑ Move aside the intercooler air inlet pipe (**9**) .

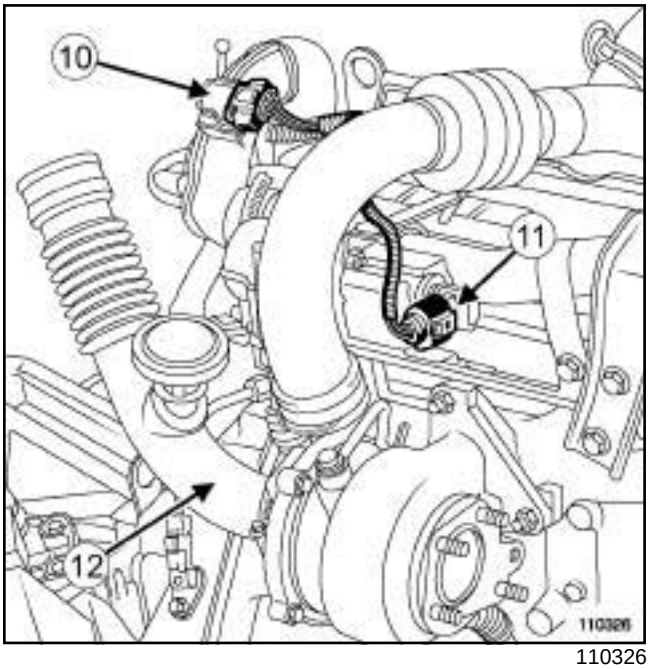

110326

❑ Disconnect:

- the turbocharging pressure sensor connector (**10**) ,
- exhaust gas recirculation solenoid valve connector (**11**) ,
- the air filter unit air outlet pipe (**12**) on the turbocharger,
- the pipe from the turbocharging pressure regulation valve to the turbocharging pressure regulation solenoid valve.

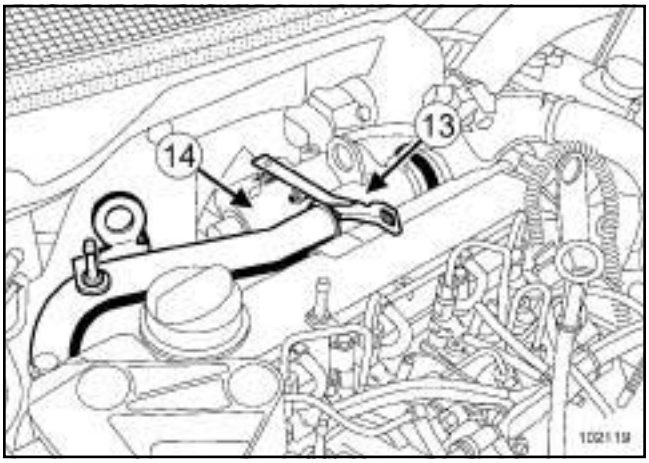

102119

❑ Remove:

- the injector rail protector bracket (**13**) ,
- the exhaust gas recirculation solenoid valve heat shield (**14**) ,

B84 or C84 or G84 or S84, and K9K, and 722 or 728 or 729

- the turbocharger oil pipes (see **12B**, **Turbocharging**, **Turbocharger oil pipe: Removal - Refitting**, page **12B-52**) ,
- the catalytic converter (see **19B**, **Exhaust**, **Catalytic converter: Removal - Refitting**, page **19B-46**) .

II - OPERATION FOR REMOVAL OF PART CONCERNED

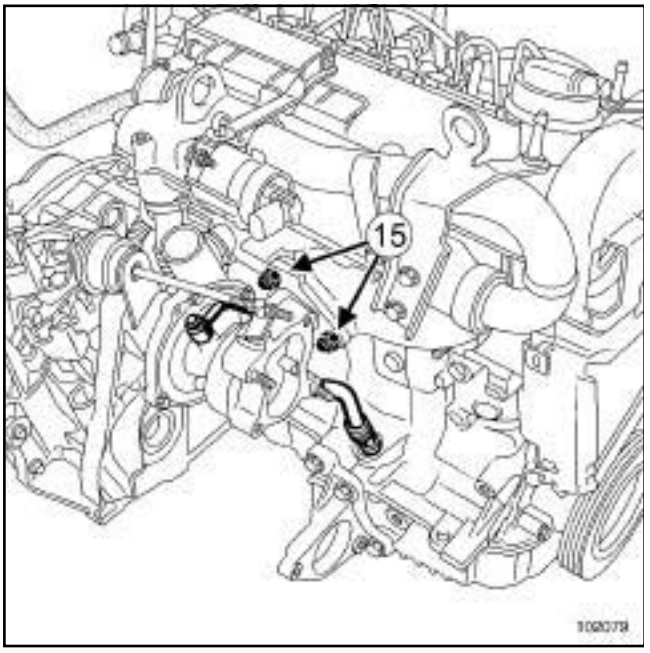

102079

❑ Remove:

- the turbocharger upper nuts (**15**) ,
- the turbocharger lower nut,
- the turbocharger,
- the turbocharger seal.

REFITTING

I - REFITTING PREPARATION OPERATION

❑

> **WARNING**
> Metal objects may enter the oil and air circuits as a result of a broken turbocharger.
>
> Failure to observe the following instructions will lead to the turbocharger breaking again.

> **WARNING**
> Following a turbocharger fault, check that the intercooler and air circuit assembly are not full of oil. If they are, remove them and clean them with a cleaning tray or station and dry them with a compressed air gun.

> **WARNING**
> The turbocharger pressure regulator rod must not be adjusted.

❑ **parts always to be replaced: seal between exhaust manifold and turbocharger (10,09,01,07)**

❑ Clean the bearing faces using **ABRASIVE PADS** on:

- the exhaust manifold in contact with the turbocharger,
- the catalytic converter in contact with the turbocharger.

❑ Next, degrease these bearing faces using **SURFACE CLEANER** (see **Vehicle: Parts and consumables for repair**) (04B, Consumables - Products) and clean cloths.

❑ If a replacement has been carried out, torque tighten:

- the **turbocharger studs on the exhaust manifold (9 N.m)**,
- the **turbocharger stud on the turbocharger (9 N.m)**.

B84 or C84 or G84 or S84, and K9K, and 722 or 728 or 729

II - REFITTING OPERATION FOR PART CONCERNED

❑

WARNING

Ensure that no foreign bodies enter the turbine or compressor during the refitting operation.

Check that the turbocharger oil return pipe is not partially or completely blocked by scale. Check that there are no leaks. If there are, replace the part.

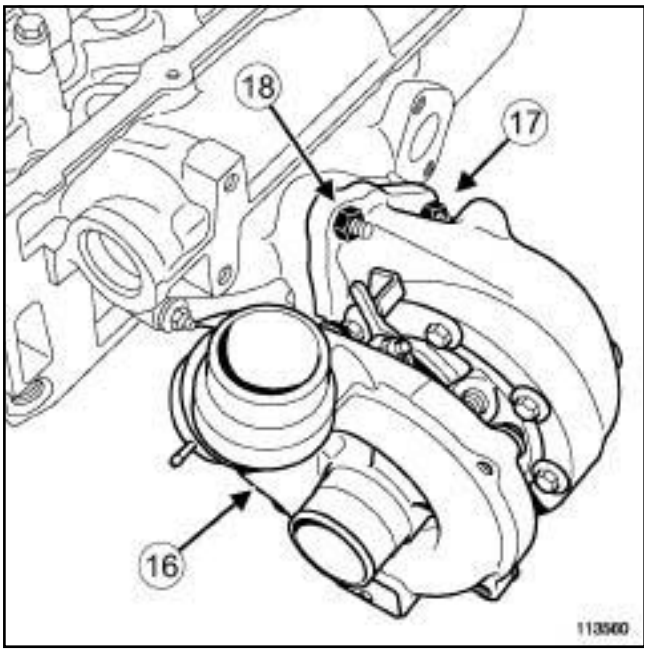

113560

❑ Fit the turbocharger with new seals on the exhaust manifold.

❑ Bolt without tightening the turbocharger nuts using an open-jawed spanner (the turbocharger must rest on the manifold and the spanner must no longer turn without effort).

❑ Put a paint mark on the turbocharger coinciding with a crest of the turbocharger lower nut (**16**) .

❑ Tighten the turbocharger lower nut until the next nut crest coincides with the paint mark made on the turbocharger (the final angle achieved is **60°**).

❑ Torque tighten:

- the **turbocharger lower nut on the exhaust manifold (28 N.m)** (**17**) ,
- the **turbocharger upper nuts on the exhaust manifold (28 N.m)** (**18**) .

III - FINAL OPERATION

❑ Refit:

- the turbocharger oil pipes (see **12B**, **Turbocharging**, **Turbocharger oil pipe: Removal - Refitting**, page **12B-52**) ,
- the catalytic converter (see **19B**, **Exhaust**, **Catalytic converter: Removal - Refitting**, page **19B-46**) ,
- the exhaust gas recirculation solenoid valve heat shield,
- the injector rail cover mounting bracket.

K9K, and 728 or 729

❑ Connect:

- the turbocharging pressure sensor connector,
- the exhaust gas recirculation solenoid valve manifold,
- the turbocharging duct on the turbocharger,
- the turbocharging pressure regulation valve pipe on the turbocharging pressure regulation solenoid valve.

❑ Refit:

- the intercooler air inlet pipe,
- the bolt on the intercooler air inlet pipe.

K9K, and 722

❑ Connect:

- the turbocharging pressure sensor,
- the exhaust gas recirculation solenoid valve,
- the turbocharging duct on the turbocharger,
- the turbocharging pressure regulation valve pipe on the air duct.

❑ Refit the engine undertray.

❑ Connect the battery (see **Battery : Removal - Refitting**) (80A, Battery).

❑ Refit the engine covers.

B84 or C84 or G84 or S84, and K9K, and 722 or 728 or 729

Check

- ❑ Disconnect the injector connectors, or the connector for the rate of flow actuator, to connect the IMV test of tool **(Mot. 1711)**.
- ❑ Run the starter motor until the oil pressure warning light goes out (wait for a few seconds).
- ❑ Switch off the ignition.
- ❑ Make sure that there are no oil leaks.
- ❑ Connect the **diagnostic tool** and clear the stored faults.
- ❑ Refit the engine undertray.

B84 or C84 or G84 or S84, and F9Q, and 800

Tightening torques ▽	
turbocharger mounting studs	**8 Nm**
turbocharger union end piece	**26 Nm**
turbocharger mounting nuts	**26 Nm**
oil supply pipe mounting nuts	**22.5 Nm**
oil supply pipe mounting bolt on the cylinder block	**12 Nm**
turbocharger oil return pipe mounting bolts	**12 Nm**
battery cover mounting bolts	**4 Nm**

REMOVAL

❑ Put the vehicle on a two-post lift.

❑ Remove the engine covers.

❑ Disconnect the battery, starting with the negative terminal.

❑ Remove the catalytic converter (see **19B, Exhaust, Catalytic converter: Removal - Refitting**).

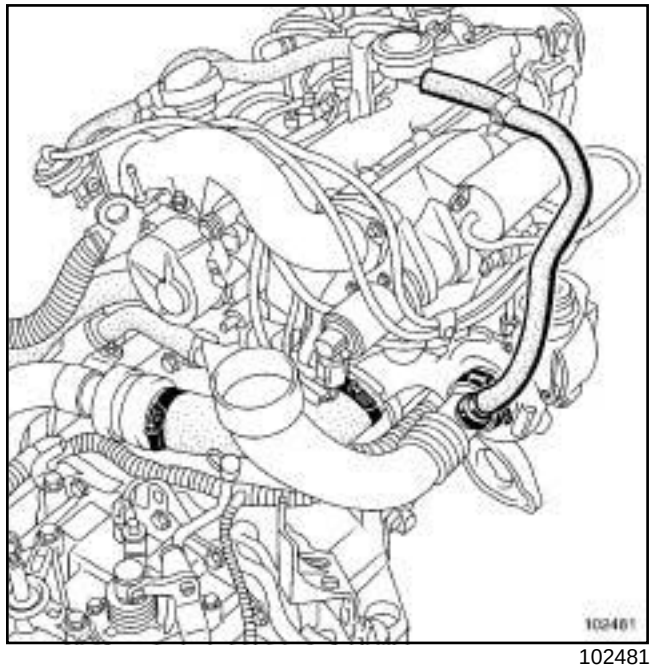

102481

❑ Disconnect the turbocharger air inlet and outlet pipes.

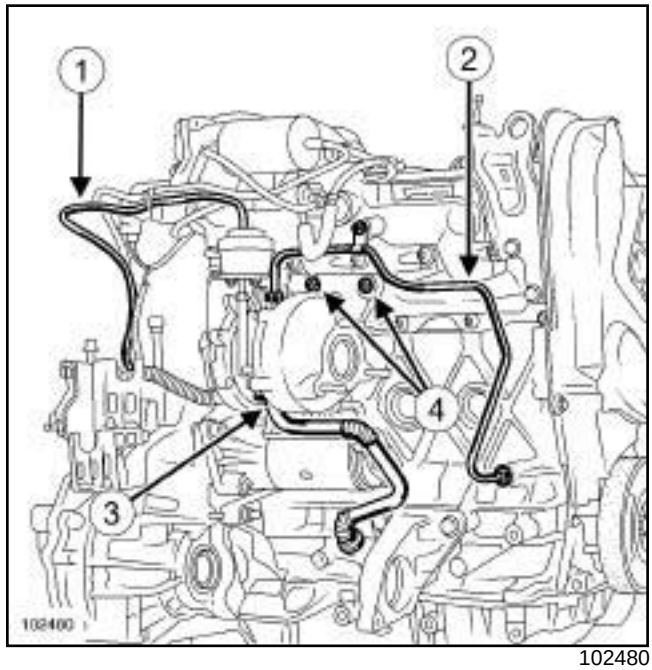

102480

❑ Disconnect the tube (**1**) from the turbocharging pressure regulation valve control diaphragm.

❑ Remove:

- the turbocharger oil supply pipe (**2**) ,
- the turbocharger oil return pipe (**3**) ,
- the turbocharger mounting nuts (**4**) ,
- the turbocharger.

B84 or C84 or G84 or S84, and F9Q, and 800

REFITTING

❏

WARNING
Ensure that no impurities enter the turbine or compressor during the refitting operation.

Check that the turbocharger oil return pipe is not completely or partially blocked by scale.

check that the sealing is perfect; if not, replace it.

❏ Proceed in the reverse order to removal.

❏ Be sure to replace the seals:

- on the turbocharger oil supply pipe,
- on the turbocharger oil return pipe,
- the turbocharger,

B84 or C84 or G84 or S84, and F9Q, and 800

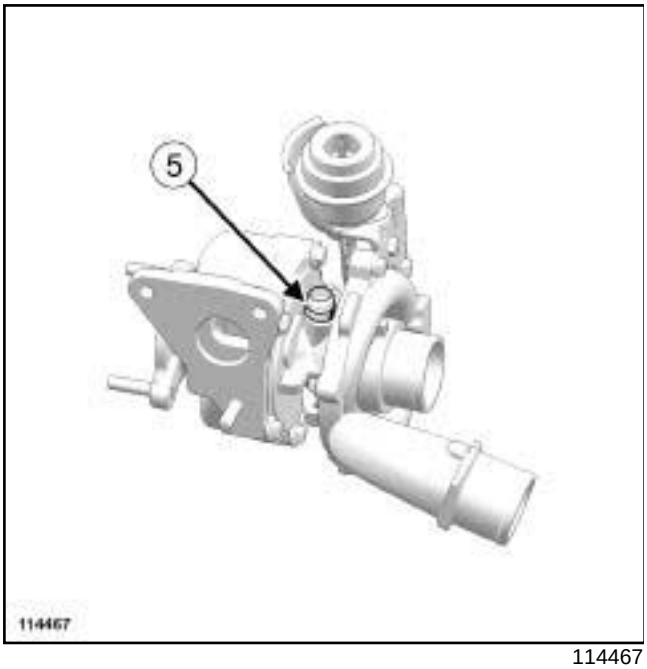

114467

- ❑ Always replace the end piece seal on the union (**5**) , if the end piece has been removed.
- ❑ Tighten to torque:
  - the **turbocharger mounting studs (8 Nm)**,
  - the **turbocharger union end piece (26 Nm)**, if the studs have been removed.
- ❑ Refit the turbocharger.
- ❑ Tighten to torque the **turbocharger mounting nuts (26 Nm)**.
- ❑ Fit the oil supply pipe:
  - screw on (without tightening) the oil supply pipe nuts,
  - screw on (without tightening) the oil supply pipe mounting bolt on the cylinder block.
- ❑ Refit the oil return pipe.
- ❑ Tighten to torque:
  - the **oil supply pipe mounting nuts (22.5 Nm)**,
  - the **oil supply pipe mounting bolt on the cylinder block (12 Nm)**,
  - the **turbocharger oil return pipe mounting bolts (12 Nm)**.
- ❑ Refit the catalytic converter (see **19B, Exhaust, Catalytic converter: Removal - Refitting**).
- ❑ Proceed in the reverse order to removal.
- ❑ Make sure that all the exhaust pipe heat shields are in place and properly secured.
- ❑ Refit the exhaust pipe, aligning it with the marks made previously.
- ❑ Make sure that there is no contact with the underbody.
- ❑ Connect the battery (see **80A, Battery, Battery: Removal - Refitting**).
- ❑ Check that there are no leaks:
  - start the engine,
  - check that the oil pressure warning light has gone out,
  - let the engine run at idle speed,
  - accelerate several times at no load,
  - switch off the ignition,
  - check that there are no oil leaks.
- ❑ Tighten to torque the **battery cover mounting bolts (4 Nm)**.

F4R, and 776

Essential special tooling	
Ms. 583	Hose clamp pliers.

Essential equipment
diagnostic tool

Tightening torques ▽	
oil return pipe bolts on the cylinder block	**12 N.m**
turbocharger cooling duct bolts (initial torque)	**12 N.m**
turbocharger cooling duct bolts	**27 N.m**
turbocharger bolts	**15 N.m + 75°**
oil supply pipe hollow bolt	**45 N.m**
oil supply pipe union	**25 N.m**
oil return pipe bolts	**8 N.m**
bolt on the oil supply and return pipes	**21 N.m**

REMOVAL

❑

> Note:
>
> To facilitate loosening of the turbocharger nuts on the exhaust manifold, spray some releasing agent onto the nuts while they are still warm, just before removal.

❑ Disconnect the battery (see **Battery: Removal - Refitting**) (80A, Battery).

❑ If the turbocharger is removed, the engine must also be removed (see **10A**, **Engine and cylinder block assembly**, **Engine/gearbox assembly: Removal - Refitting**, page **10A-97**) .

❑ Remove the catalytic converter (see **19B**, **Exhaust**, **Catalytic converter: Removal - Refitting**, page **19B-46**) .

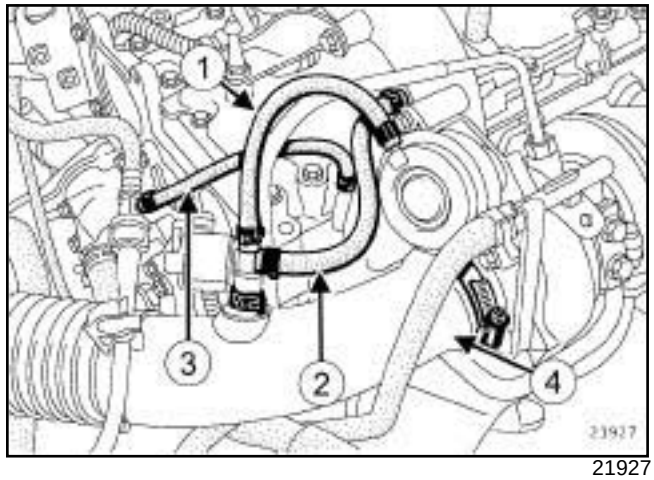

21927

❑ Disconnect:

- the pipe on the turbocharging pressure regulation valve control solenoid valve (**1**) ,
- the solenoid valve-turbocharger pipe (**2**) ,
- the braking solenoid valve pipe (**3**) .

❑ Remove the air outlet pipe from the air filter box (**4**) .

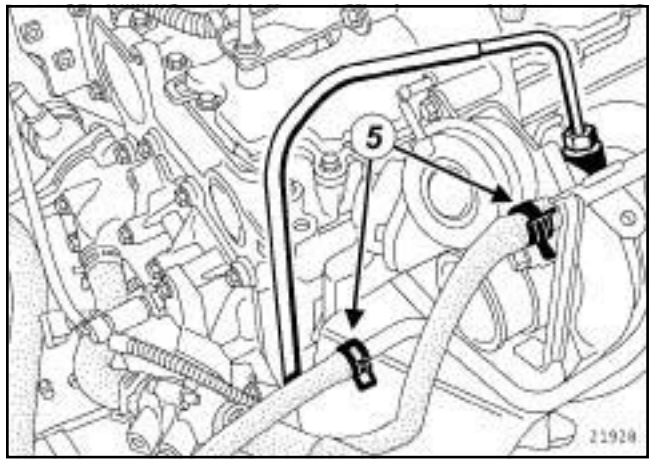

21928

❑ Fit the tool **(Ms. 583)** and remove the cooling pipes from the turbocharger (**5**) .

F4R, and 776

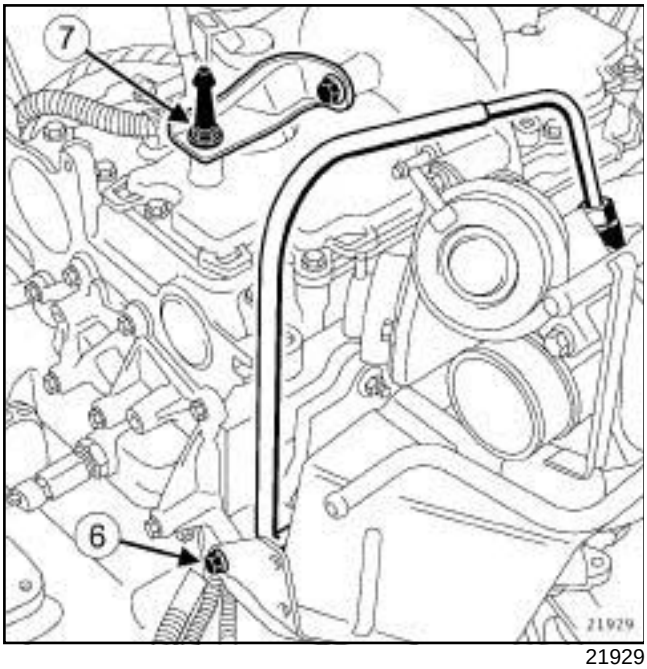

21929

❑ Remove:

- the heat shield bolt (**6**) ,
- the engine cover mounting and the turbocharger strut (**7**) ,
- the intercooler air inlet pipe.

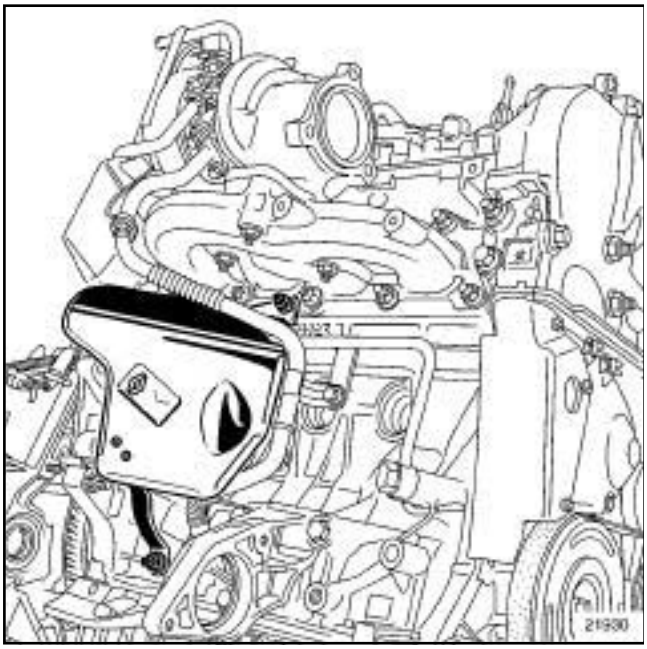

21930

❑ Remove the starter heat shield.

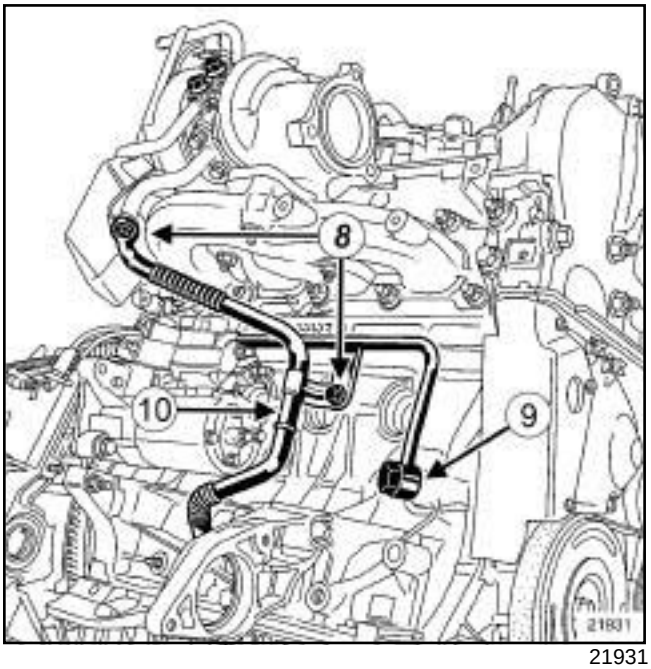

21931

❑ Remove:

- the bolts (**8**) from the turbocharger oil return pipe,
- the turbocharger oil return pipe (**10**) ,
- the turbocharger oil supply pipe (**9**) .

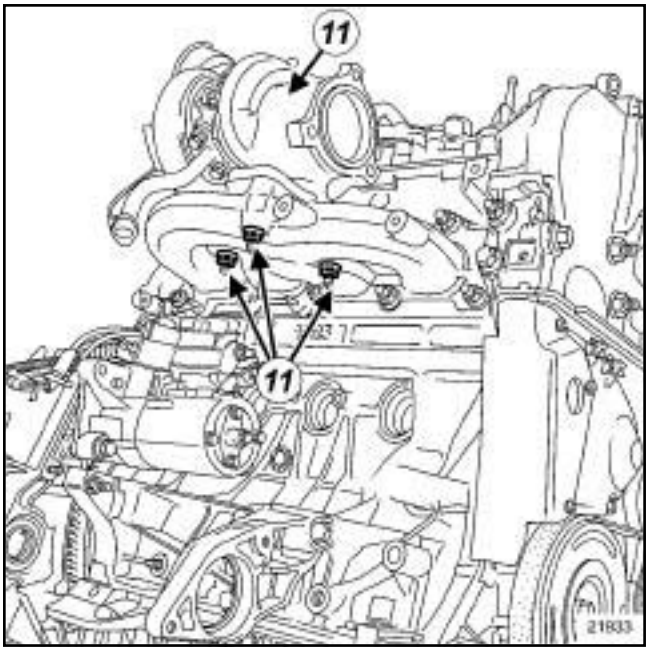

21933

❑ Remove:

- the nuts (**11**) from the turbocharger on the manifold,
- the turbocharger.

F4R, and 776

REFITTING

❑ The turbocharger studs and mounting nuts must be replaced along with the seals.

IMPORTANT
Wear heat protective gloves during the operation.

WARNING
Metal objects may enter the oil and air circuits as a result of a broken turbocharger.

Failure to observe the following instructions will lead to the turbocharger breaking again.

WARNING
Ensure that no foreign bodies enter the turbine or compressor during the refitting operation.

Check that the turbocharger oil return pipe is not partially or completely blocked by scale. Check that there are no leaks. If there are, replace the part.

WARNING
The turbocharger pressure regulator rod must not be adjusted.

WARNING
Following a turbocharger fault, check that the intercooler and air circuit assembly are not full of oil. If they are, remove them and clean them with a cleaning tray or station and dry them with a compressed air gun.

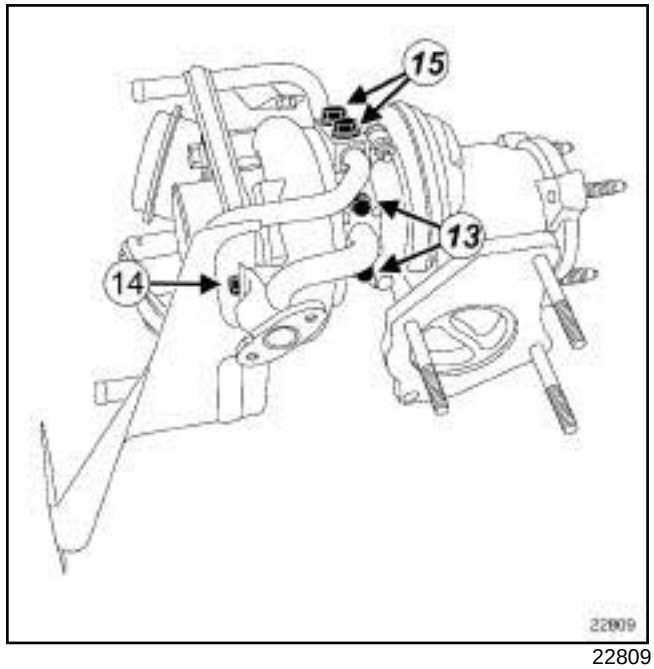

22809

❑ On the workbench, refit and tighten to torque:

- the two **oil return pipe bolts on the cylinder block (12 N.m)** (**13**) ,
- the oil return pipe bolt (**14**) .

❑ Pretighten the **turbocharger cooling duct bolts (initial torque) (12 N.m)** (**15**) .

❑ Torque tighten the **turbocharger cooling duct bolts (27 N.m)**.

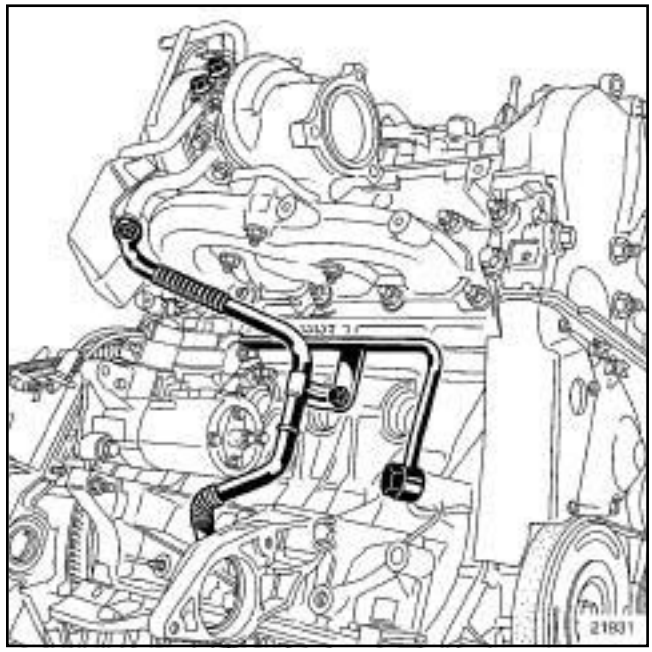

21931

❑ Fit and finger tighten:

- the turbocharger on the exhaust manifold,

F4R, and 776

- the oil supply pipe on the turbocharger,
- the fuel return pipe to the cylinder block,
- the intercooler air inlet pipe,
- the turbocharger strut.

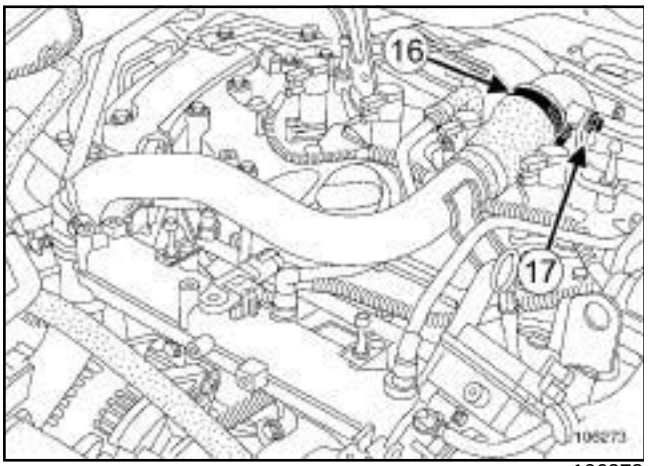

106273

❑ Tighten:

- the clip (**16**) on the intercooler air inlet pipe to position the turbocharger,
- the turbocharger strut (**17**) .

F4R, and 776

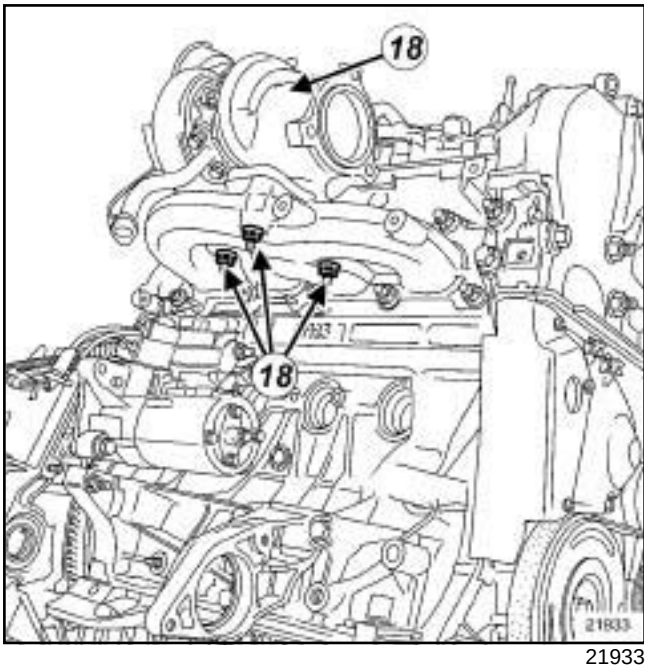

21933

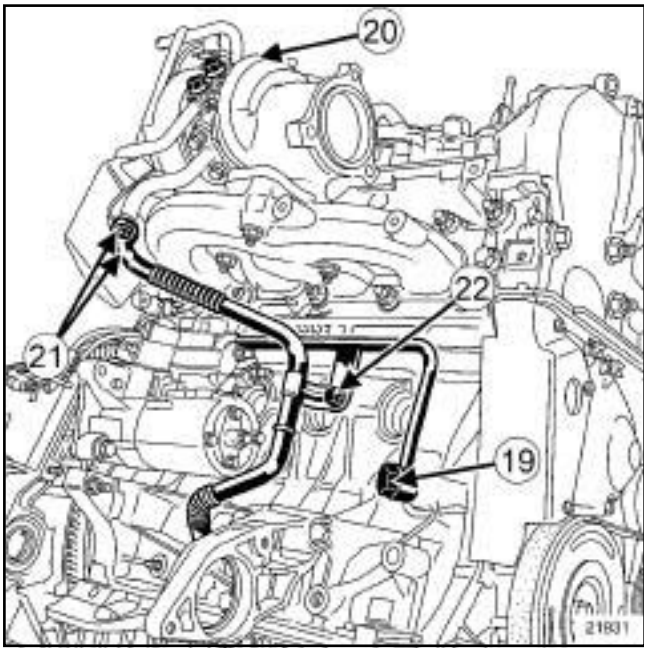

21931

- Torque tighten:
  - the **turbocharger bolts (15 N.m + 75°)** (**18**) ,
  - the **oil supply pipe hollow bolt (45 N.m)** (**19**) ,
  - the **oil supply pipe union (25 N.m)** (**20**) ,
  - the **oil return pipe bolts (8 N.m)** (**21**) ,
  - the **bolt on the oil supply and return pipes (21 N.m)** (**22**) .
- Proceed in the reverse order to removal.
- All removed seals must be replaced including those on the cooling pipe as well as the intercooler / turbocharger air pipe.
- Connect the battery (see **Battery : Removal - Refitting**) (80A, Battery).
- Fill and bleed the cooling system (see **19A**, **Cooling**, **Cooling circuit: Draining - Refilling**, page **19A-15**) ,
- Before starting the engine, connect the **diagnostic tool** and lock the injection system.
- Run the starter motor until the oil pressure warning light goes out (wait for a few seconds) then lock the injection system.
- Start the engine then accelerate with no load several times.
- Switch off the ignition and check that there are no oil leaks.
- Run the engine at idle speed until the engine cooling fan starts to operate:
- Accelerate several times with no load then carry out a road test.
- Clear the faults using the **diagnostic tool**.
- Switch off the ignition and check that there are no oil leaks.

C84 or E84 or G84 or K84 or L84 or S84, and F9Q, and 803 or 804 or 816 or 818

Essential special tooling	
Mot. 1448	Long nose pliers for hose clips.

Essential equipment
diagnostic tool

Tightening torques ▽	
turbocharger nuts	**37 N.m**
turbocharger oil supply pipe hollow bolts	**22.5 N.m**
oil supply pipe hollow bolts on the cylinder block	**44 N.m**
oil supply pipe bolt on the cylinder block	**25 N.m**
turbocharger oil return pipe	**12 N.m**

REMOVAL

❑ Position the vehicle on a two-post lift (see **Vehicle: Towing and lifting**) (02A, Lifting equipment).

❑ Remove:

- the engine covers,
- the battery (see **Battery: Removal - Refitting**) (80A, Battery),
- the battery tray (see **Battery tray: Removal - Refitting**) (80A, Battery),
- the engine undertray bolts,
- the engine undertray.

❑ Drain the cooling system (see **19A**, **Cooling**, **Cooling circuit: Draining - Refilling**, page **19A-15**) .

❑ Remove the catalytic pre-converter (see **19B**, **Exhaust**, **Catalytic pre-converter: Removal - Refitting**, page **19B-29**) .

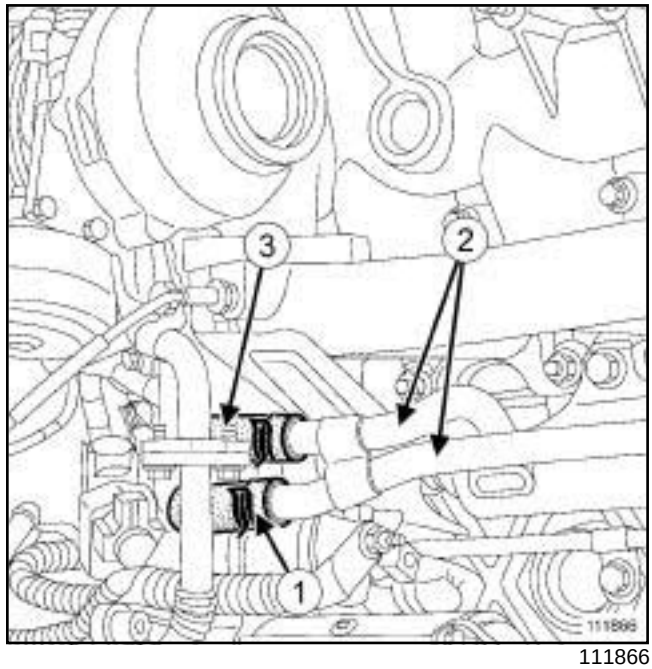

111866

❑ Using the **(Mot. 1448)**, remove:

- the « pipe - rigid pipe » assembly (**1**) between the EGR cooler (**2**) and the water chamber,
- the « pipe - rigid pipe » assembly (**3**) between the EGR cooler and the heater matrix pipe.

❑ Disconnect the top cooling pipe on the turbocharger.

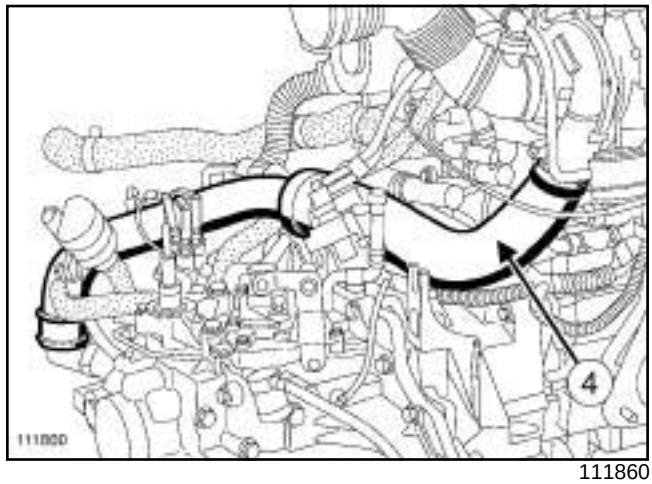

111860

❑ Remove the turbocharger air duct (**4**) .

C84 or E84 or G84 or K84 or L84 or S84, and F9Q, and 803 or 804 or 816 or 818

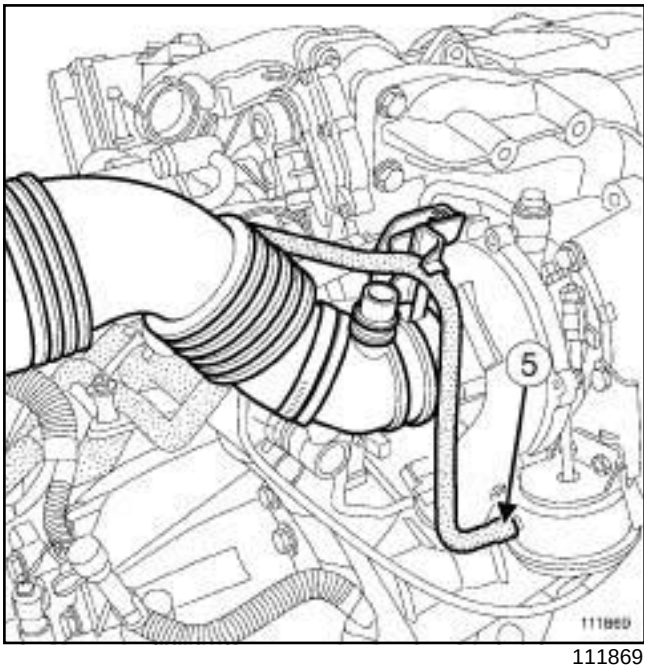

111869

❑ Remove the duct between the turbocharger and the air filter.

❑ Disconnect the vacuum pipe (**5**) from the turbocharger.

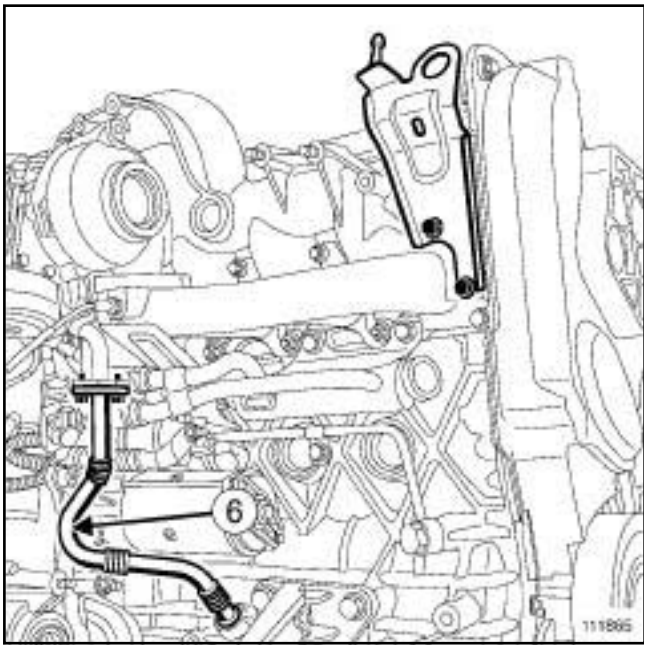

111865

❑ Remove the turbocharger oil return pipe (**6**) .

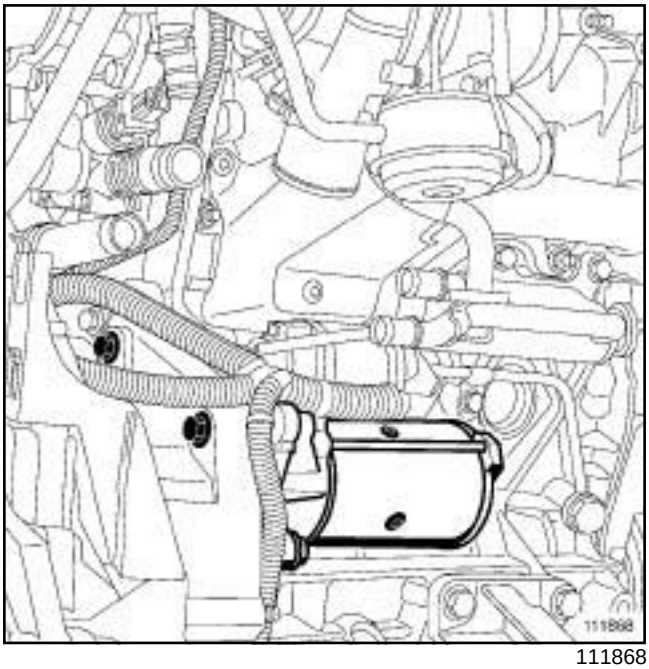

111868

❑ Remove the starter (see **16A**, **Starting - Charging**, **Starter: Removal - Refitting**, page **16A-21**) .

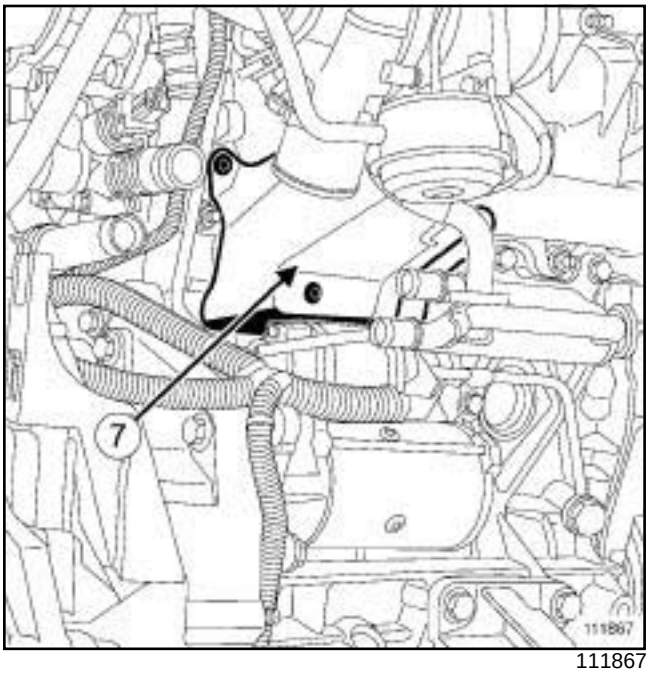

111867

❑ Remove the heat shield (**7**) .

C84 or E84 or G84 or K84 or L84 or S84, and F9Q, and 803 or 804 or 816 or 818

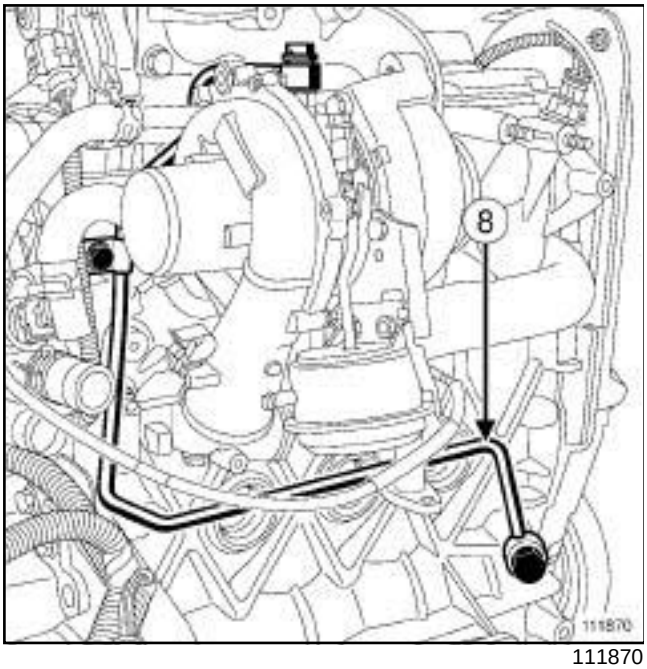

111870

❑ Remove the oil supply pipe (**8**) from the turbocharger.

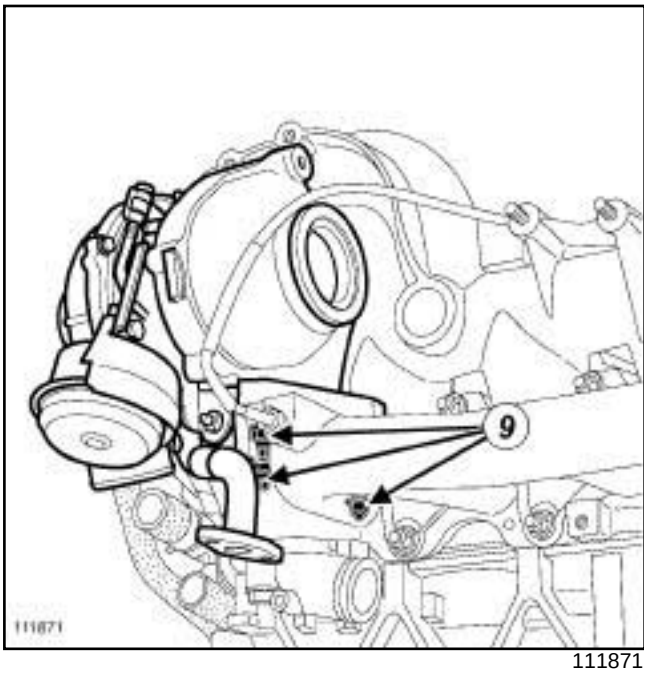

111871

❑ Remove the nuts (**9**) on the turbocharger.

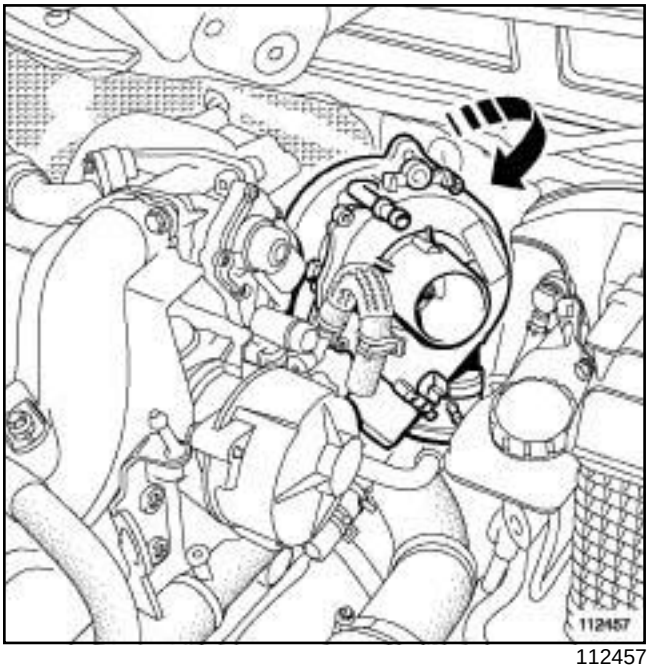

112457

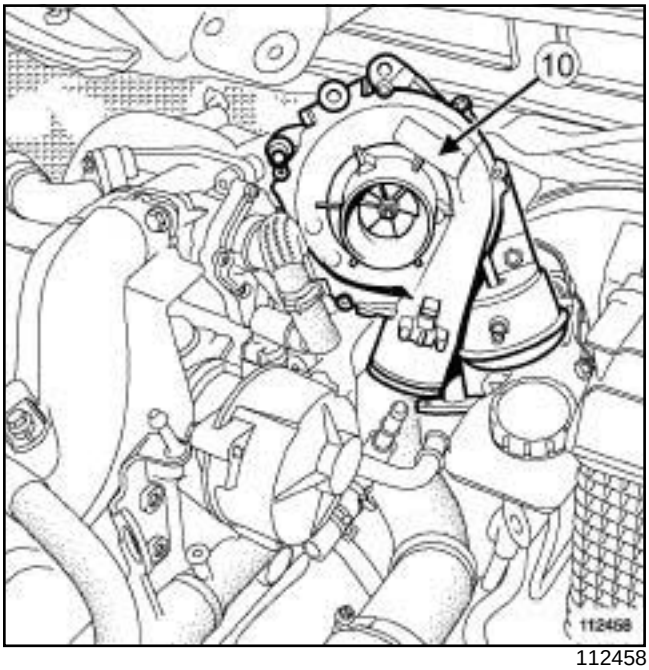

112458

❑ Remove the turbocharger (**10**) .

C84 or E84 or G84 or K84 or L84 or S84, and F9Q, and 803 or 804 or 816 or 818

REFITTING

❑

> **WARNING**
> Ensure that no foreign bodies enter the turbine or compressor during the refitting operation.
>
> Check that the turbocharger oil return pipe is not completely or partially blocked by scale. Check that there are no leaks. If there are, replace the part.

❑ Proceed in the reverse order to removal.

❑ **parts always to be replaced: catalytic converter stud on the turbocharger (if loosened) (10,09,01, 04)**.

parts always to be replaced: Turbocharger nut (10,09,01,03).

parts always to be replaced: exhaust manifold stud on the turbocharger (if loosened) (10,09,01, 11).

parts always to be replaced: turbocharger rigid cooling pipe seal (10,09,01,09).

> Note:
> The turbocharger - manifold gasket has a direction of fitting.
>
> The tab of the gasket should be on the turbocharger side.

❑ Torque tighten:

- the **turbocharger nuts (37 N.m)**,
- the **turbocharger oil supply pipe hollow bolts (22.5 N.m)**,
- the **oil supply pipe hollow bolts on the cylinder block (44 N.m)**,
- the **oil supply pipe bolt on the cylinder block (25 N.m)**,
- the **turbocharger oil return pipe (12 N.m)**.

❑ Refit:

- the starter (see **16A**, **Starting - Charging**, **Starter: Removal - Refitting**, page **16A-21**) ,
- the catalytic pre-converter (see **19B**, **Exhaust**, **Catalytic pre-converter: Removal - Refitting**, page **19B-29**) .

❑ Check:

- that all the exhaust pipe heat shields are in place and properly attached,
- that there is no contact with the underbody.

❑ Refit:

- the battery (see **Battery: Removal - Refitting**) (80A, Battery),
- the battery tray (see **Battery tray: Removal - Refitting**) (80A, Battery).

❑ Check that there are no leaks:

- start the engine,
- check that the oil pressure warning light has gone out,
- leave the engine to idle,
- accelerate several times at no load,
- switch off the ignition,
- check that there are no oil leaks.

❑ Connect the **diagnostic tool** and clear the stored faults.

❑ Fill and bleed the cooling system (see **19A**, **Cooling**, **Cooling circuit: Draining - Refilling**, page **19A-15**) .

❑ Refit the engine undertray.

B84 or C84 or G84 or K84 or L84 or S84, and K9K, and 732 or 734

Essential special tooling	
Mot. 1202-01	Pliers for large hose clips.
Mot. 1202-02	Pliers for small hose clips.
Mot. 1448	Long nose pliers for hose clips.
Mot. 1807	Spanner for tightening exhaust gas temperature sensor

Tightening torques ▽	
exhaust gas temperature sensor	**32 N.m**
turbocharger nuts	**28 N.m**

IMPORTANT
Wear protective gloves during the operation.

IMPORTANT
Wear latex gloves during the operation.

IMPORTANT
Wear heat protective gloves during the operation.

REMOVAL

I - REMOVAL PREPARATION OPERATION

❑ Position the vehicle on a two-post lift (see **Vehicle: Towing and lifting**) (02A, Lifting equipment).

❑ Disconnect the battery (see **Battery: Removal - Refitting**) (80A, Battery).

❑ Remove:

- the engine cover,
- the scuttle panel grille (see **Scuttle panel grille: Removal - Refitting**) (56A, Exterior equipment),
- the engine undertray bolts,
- the engine undertray,
- the lower engine tie-bar (see **19D**, **Engine mounting**, **Lower engine tie-bar: Removal - Refitting**, page **19D-36**) .

K9K, and 732

❑ Remove the catalytic converter (see **19B**, **Exhaust**, **Catalytic converter: Removal - Refitting**, page **19B-46**) .

K9K, and 734

❑ Remove the catalytic pre-converter (see **19B**, **Exhaust**, **Catalytic pre-converter: Removal - Refitting**, page **19B-29**) .

❑ Remove the turbocharger oil pipes (see **12B**, **Turbocharging**, **Turbocharger oil pipe: Removal - Refitting**, page **12B-52**) .

K9K, and 734

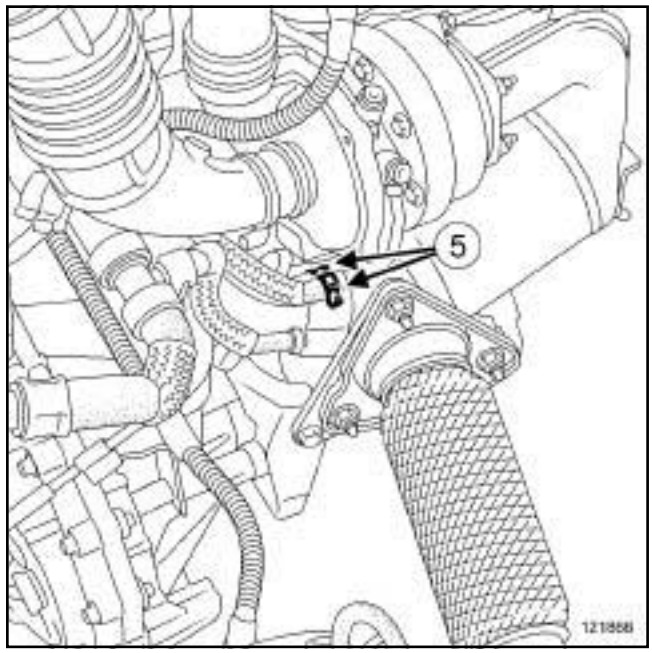

121866

❑ Remove the turbocharger cooling hose clip (**5**) using the **(Mot. 1202-01)** or **(Mot. 1202-02)** or **(Mot. 1448)**.

❑ Disconnect the turbocharger cooling hoses.

B84 or C84 or G84 or K84 or L84 or S84, and K9K, and 732 or 734

II - OPERATION FOR REMOVAL OF PART CONCERNED

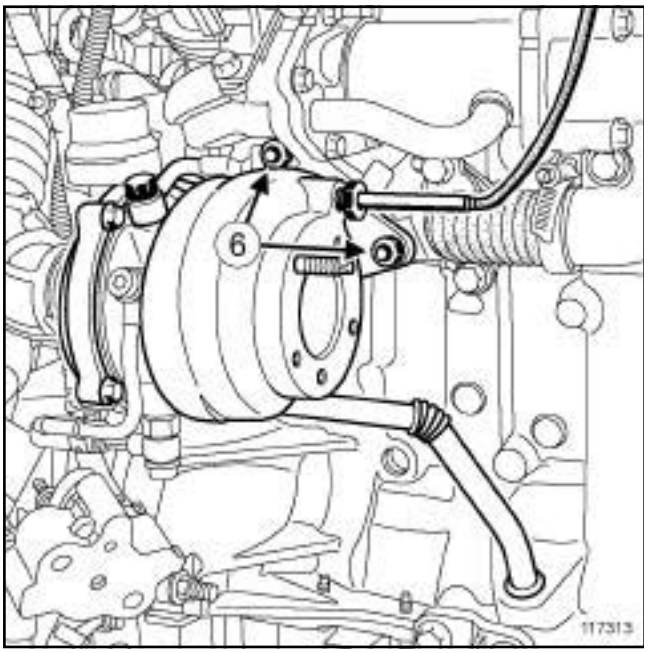

117313

- ❑ Disconnect the turbocharging pressure regulation valve pipe at the turbocharging pressure regulation valve end.
- ❑ Remove:
  - the turbocharger upper nuts (**6**) ,
  - the turbocharger lower nut,
  - the turbocharger,
  - the turbocharger seal.

REFITTING

I - REFITTING PREPARATION OPERATION

❑

WARNING

Metal objects may enter the oil and air circuits as a result of a broken turbocharger.

Failure to observe the following instructions will lead to the turbocharger breaking again.

WARNING

Following a turbocharger fault, check that the intercooler and air circuit assembly are not full of oil. If they are, remove them and clean them with a cleaning tray or station and dry them with a compressed air gun.

WARNING

The turbocharger pressure regulator rod must not be adjusted.

- ❑ **parts always to be replaced: seal between exhaust manifold and turbocharger (10,09,01,07)**
- ❑ Use **ABRASIVE PADS** to clean the bearing faces of the turbocharger if it is to be reused.

K9K, and 732

- ❑ Use **ABRASIVE PADS** to clean the bearing faces of the catalytic converter.

K9K, and 734

- ❑ Use **ABRASIVE PADS** to clean the bearing faces of the catalytic pre-converter.

B84 or C84 or G84 or K84 or L84 or S84, and K9K, and 732 or 734

If replacing the turbocharger

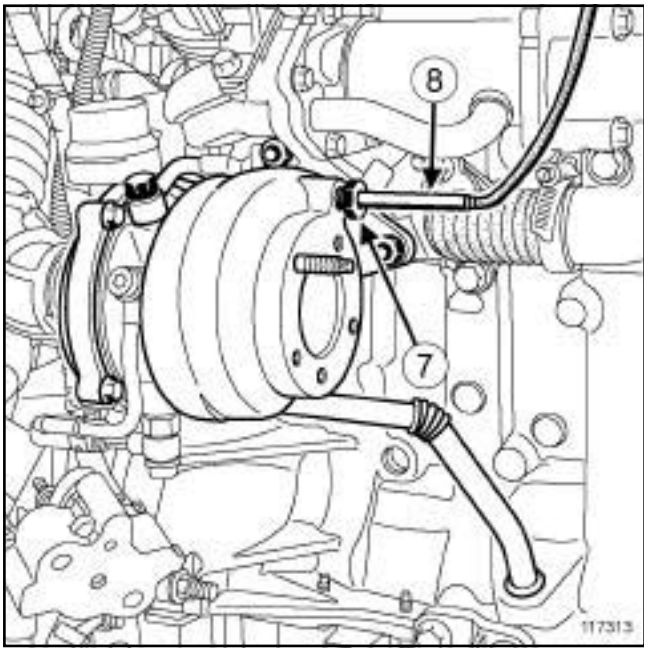

117313

❑ Remove:

- the nut (**7**) from the exhaust gas temperature sensor with the **(Mot. 1807)**,
- the exhaust gas temperature sensor (**8**) .

❑ Clean the exhaust gas temperature sensor with a clean, dry and lint-free cloth.

> Note:
>
> Make sure that the grease does not run over the threading.

❑ Coat the threading of the exhaust gas temperature sensor nut with **COPPER ANTI-SEIZE GREASE** or **COPPER ALUMINIUM LUBRICANT** (see **Vehicle: Parts and ingredients for the repairwork**) (04B, Consumables - Products).

❑ Refit the exhaust gas temperature sensor onto the new turbocharger.

❑ Torque tighten the **exhaust gas temperature sensor (32 N.m)** using the **(Mot. 1807)**.

II - REFITTING OPERATION FOR PART CONCERNED

❑

> **WARNING**
>
> Ensure that no foreign bodies enter the turbine or compressor during the refitting operation.
>
> Check that the turbocharger oil return pipe is not partially or completely blocked by scale. Check that there are no leaks. If there are, replace the part.

Refit:

- a new turbocharger seal,
- the turbocharger.

❑ Bolt without tightening the turbocharger nuts using an open-jawed spanner (the turbocharger must rest on the manifold and the spanner must no longer turn without effort).

❑ Put a paint mark on the turbocharger coinciding with a crest of the turbocharger lower nut.

❑ Tighten the turbocharger lower nut until the next nut crest coincides with the mark made on the turbocharger (the final angle achieved is **60°**).

❑ Torque tighten the **turbocharger nuts (28 N.m)**.

❑ Connect the turbocharging pressure regulation valve pipe to the turbocharging pressure regulation valve.

III - FINAL OPERATION

K9K, and 734

❑ Connect the turbocharger cooling hoses.

❑ Fit the turbocharger cooling hose clip using the **(Mot. 1202-01)** or **(Mot. 1202-02)** or **(Mot. 1448)**.

❑ Refit the turbocharger oil pipes (see **12B**, **Turbocharging**, **Turbocharger oil pipe: Removal - Refitting**, page **12B-52**) .

K9K, and 732

❑ Refit the catalytic converter (see **19B**, **Exhaust**, **Catalytic converter: Removal - Refitting**, page **19B-46**) .

B84 or C84 or G84 or K84 or L84 or S84, and K9K, and 732 or 734

K9K, and 734

- ❑ Refit the catalytic pre-converter (see **19B**, **Exhaust**, **Catalytic pre-converter: Removal - Refitting**, page **19B-29**) .

- ❑ Refit the lower engine tie-bar (see **19D**, **Engine mounting**, **Lower engine tie-bar: Removal - Refitting**, page **19D-36**) .
- ❑ Refit the engine undertray.
- ❑ Refit:
  - the scuttle panel grille (see **Scuttle panel grille: Removal - Refitting**) (56A, Exterior equipment),
  - the engine cover.
- ❑ Connect the battery (see **Battery : Removal - Refitting**) (80A, Battery).

F9Q, and 808

Essential special tooling	
Mot. 1566	Spanner for removing high pressure pipes.

Tightening torques ▽	
turbocharger mounting studs	**8 N.m**
turbocharger mounting nuts	**26 N.m**
turbocharger oil supply pipe hollow mounting bolt	**22.5 N.m**
oil supply pipe mounting nut on the cylinder block	**22.5 N.m**
oil supply pipe mounting bolt on the cylinder block	**25 N.m**
turbocharger oil return pipe mounting bolts	**12 N.m**
turbocharger mounting studs	**8 N.m**
turbocharger union end piece	**26 N.m**
turbocharger mounting nuts	**26 N.m**
oil supply pipe mounting nut on the turbocharger side	**22.5 N.m**
oil supply pipe mounting nut on the cylinder block side	**22.5 N.m**
turbocharger oil return pipe mounting bolts	**12 N.m**
battery cover mounting bolts	**4 N.m**

REMOVAL

❑ Position the vehicle on a two-post lift (see **Vehicle: Towing and lifting**) (02A, Lifting).

❑ Remove the engine covers.

❑ Disconnect the battery, starting with the negative terminal (see **Battery : Removal - Refitting**) (80A, Battery).

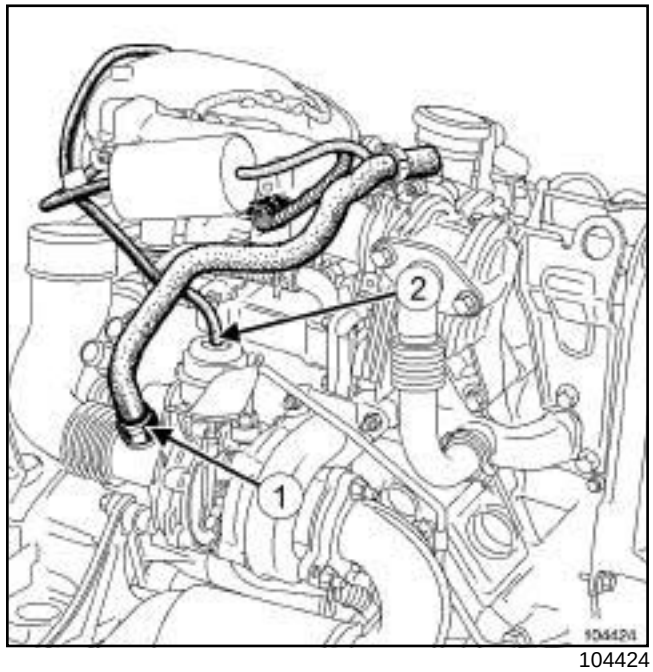

104424

❑ Disconnect:

- the oil vapour rebreathing pipe (**1**) ,
- the turbocharger supercharging pressure regulation valve (**2**) .

F9Q, and 808

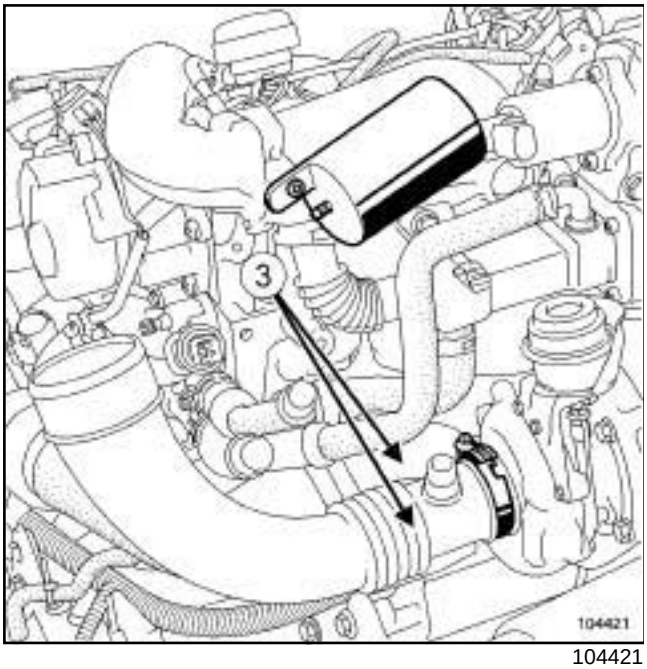

104421

- ❑ Disconnect the turbocharger air outlet and inlet pipes (**3**) .
- ❑ Remove the catalytic converter (see **19B**, **Exhaust**, **Catalytic converter: Removal - Refitting**, page **19B-46**) .

> Note:
>
> During factory fitting, 2 types of oil supply pipe may be fitted to this turbocharger.
>
> The removal procedure for the turbocharger depends on the type of pipe fitted.

I - OIL SUPPLY PIPE WITH A HOLLOW BOLT UNION (TURBOCHARGER SIDE)

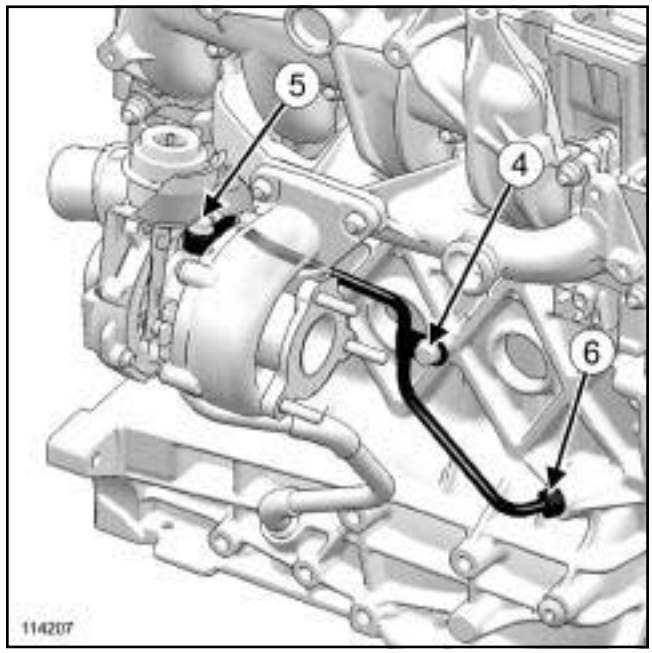

114207

- ❑ Remove:
  - the oil supply pipe mounting bolt (**4**) ,
  - the oil supply pipe union hollow mounting bolt (**5**) on the turbocharger.
- ❑ Loosen the union (**6**) on the cylinder block.
- ❑ Remove the oil supply pipe by passing it through the turbocharger wheels.
- ❑ Remove:
  - the oil return pipe mounting bolts,
  - the oil return pipe,
  - the turbocharger bracket mounting nuts,
  - the turbocharger.

F9Q, and 808

II - THE OIL SUPPLY PIPE WITH NUT UNION (TURBOCHARGER SIDE)

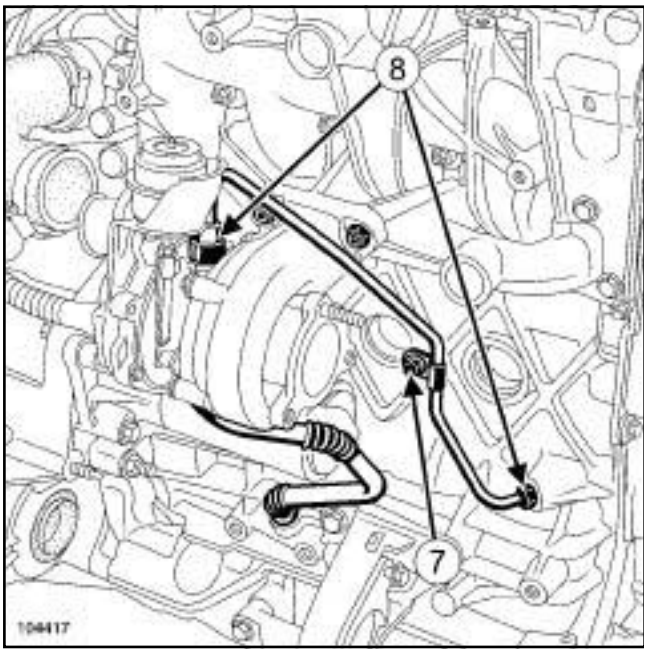

104417

❑ Remove the oil supply pipe mounting bolt (**7**) on the cylinder block.

❑ Unscrew the oil supply pipe unions on:

- the cylinder block,
- the turbocharger (**8**) using the **(Mot. 1566)**.

❑ Remove the turbocharger oil supply pipe.

❑ Remove:

- the oil return pipe mounting bolts,
- the oil return pipe,
- the turbocharger bracket mounting nuts,
- the turbocharger.

> Note:
>
> In the Parts Department, there is only one part number for the supply pipe. Only the oil supply pipe with the hollow bolt union is available.

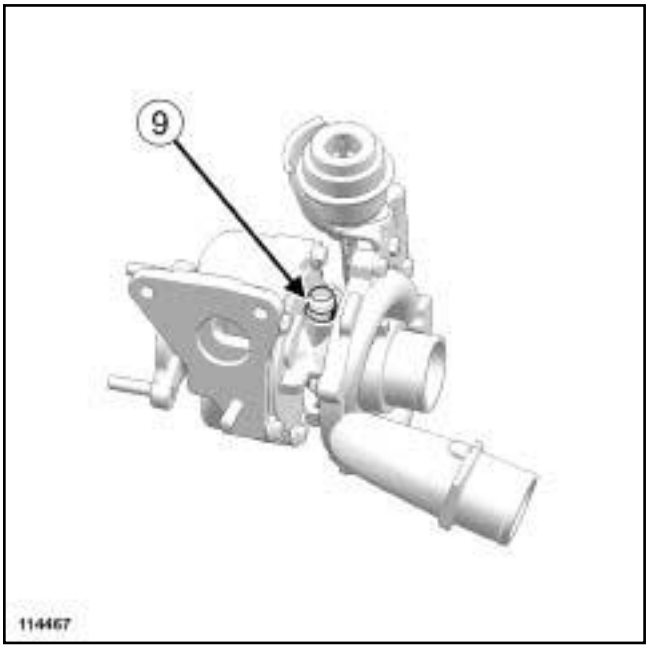

114467

❑ In the event that the oil supply pipe is replaced:

- remove the oil supply union end piece (**9**) . This stage prepares the turbocharger for the supply pipe to be refitted with a hollow bolt union.

REFITTING

❑

> Note:
>
> During factory fitting, 2 types of oil supply pipe may be fitted to this turbocharger.
>
> The refitting procedure for the turbocharger depends on the type of pipe fitted.

> **WARNING**
>
> Ensure that no impurities enter the turbine or compressor during the refitting operation.
>
> Check that the turbocharger oil return pipe is not completely or partially blocked by scale.
>
> Also check that it is perfectly sealed. If not, replace it.

❑ Proceed in the reverse order to removal.

❑ Always replace:

- the oil supply pipe with hollow bolt union on the turbocharger side (depending on version),
- the seals for the oil supply pipe with a nut union, turbocharger side (depending on version),
- the seals on the turbocharger oil return pipe,

F9Q, and 808

- the turbocharger seals.

I - OIL SUPPLY PIPE WITH A HOLLOW BOLT UNION (TURBOCHARGER SIDE)

❏ Torque tighten the **turbocharger mounting studs (8 N.m)**.

❏ Refit the turbocharger.

❏ Torque tighten the **turbocharger mounting nuts (26 N.m)**.

❏ Fit the oil supply pipe:

- screw on (without tightening) the oil supply union mounting nut on the cylinder block,
- screw (without tightening) the hollow bolt mounting the supply pipe,
- screw (without tightening) the bolt mounting the oil supply pipe on the cylinder block,

❏ Refit the oil return pipe.

❏ Torque tighten:

- the **turbocharger oil supply pipe hollow mounting bolt (22.5 N.m)**,
- the **oil supply pipe mounting nut on the cylinder block (22.5 N.m)**,
- the **oil supply pipe mounting bolt on the cylinder block (25 N.m)**
- the **turbocharger oil return pipe mounting bolts (12 N.m)**.

II - THE OIL SUPPLY PIPE WITH NUT UNION (TURBOCHARGER SIDE)

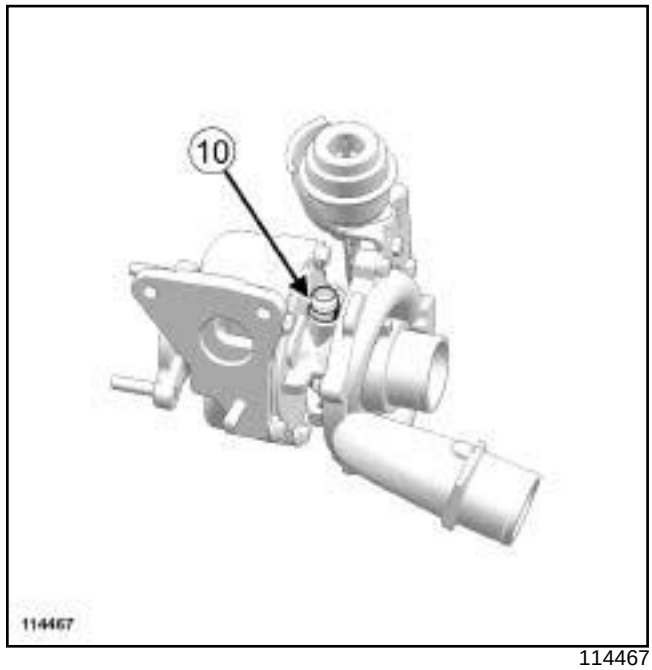

114467

❏ Always replace the end piece seal on the union (**10**) , if the end piece has been removed.

❏ Torque tighten:

- the **turbocharger mounting studs (8 N.m)**,
- the **turbocharger union end piece (26 N.m)**, if it has been removed.

❏ Refit the turbocharger.

❏ Torque tighten the **turbocharger mounting nuts (26 N.m)**.

❏ Fit the oil supply pipe:

- screw (without tightening) the oil supply pipe mounting nuts,
- screw (without tightening) the bolt mounting the oil supply pipe on the cylinder block,

❏ Refit the oil return pipe.

❏ Torque tighten:

- using the tool, the **oil supply pipe mounting nut on the turbocharger side (22.5 N.m)**,
- the **oil supply pipe mounting nut on the cylinder block side (22.5 N.m)**,
- the **turbocharger oil return pipe mounting bolts (12 N.m)**

F9Q, and 808

III - AFTER REFITTING

- ❑ Refit the catalytic converter (see **19B**, **Exhaust**, **Catalytic converter: Removal - Refitting**, page **19B-46**) .
- ❑ To refit, proceed in the reverse order of removal.
- ❑ Make sure that all the exhaust pipe heat shields are in place and properly secured.
- ❑ Refit the exhaust pipe, aligning the marks made before.
- ❑ Make sure that there is no contact with the underbody.
- ❑ Connect the battery (see **Battery : Removal - Refitting**) (80A, Battery).
- ❑ Check that there are no leaks:
  - start the engine,
  - check that the oil pressure warning light has gone out,
  - leave the engine to idle,
  - accelerate several times at no load,
  - switch off the ignition,
  - check that there are no oil leaks.
- ❑ Torque tighten the **battery cover mounting bolts (4 N.m)**.

B84 or C84, and F4R, and 774

Essential special tooling	
Ms. 583	Hose clamp pliers.
Mot. 1448	Long nose pliers for hose clips.

Essential equipment
diagnostic tool

Tightening torques ▽	
oil return pipe bolts on the cylinder block	**12 N.m**
oil return pipe bolt	**12 N.m**
turbocharger cooling duct bolts (initial torque)	**12 N.m**
turbocharger cooling duct bolts	**27 N.m**
turbocharger bolts	**15 N.m + 75°**
oil supply pipe bolts	**21 N.m**
oil supply pipe hollow bolt	**45 N.m**

Note:

To facilitate loosening of the turbocharger nuts on the exhaust manifold, spray some releasing agent onto the nuts while they are still warm, just before removal.

REMOVAL

❑ Disconnect the battery (see **Battery: Removal - Refitting**) (80A, Battery).

❑ Remove:

- the engine and gearbox assembly (see **10A**, **Engine and cylinder block assembly**, **Engine/gearbox assembly: Removal - Refitting**, page **10A-97**) ,
- the catalytic converter (see **19B**, **Exhaust**, **Catalytic converter: Removal - Refitting**, page **19B-46**) .

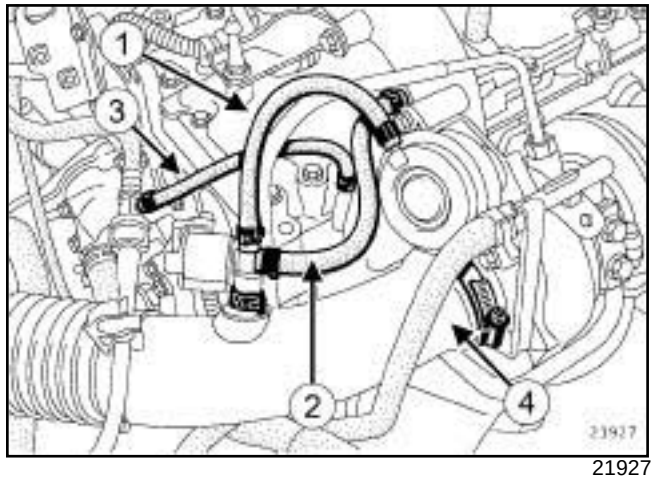

21927

❑ Disconnect:

- the pipe of the turbocharging pressure regulation valve control solenoid valve (**1**) ,
- the solenoid valve-turbocharger pipe (**2**) ,
- the brake servo pipe (**3**) .

❑ Remove the air outlet pipe from the air filter box (**4**) .

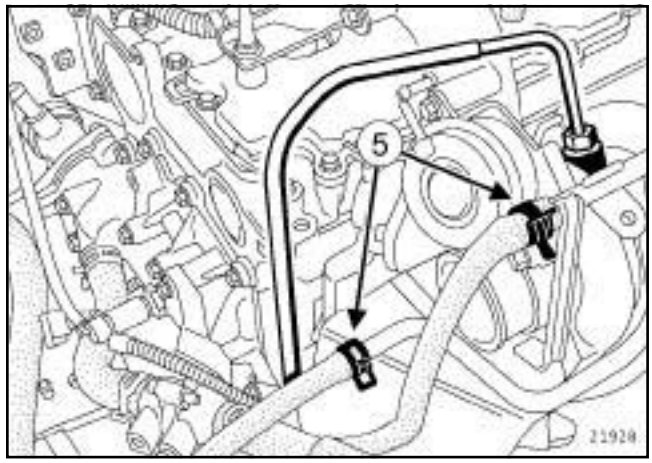

21928

❑ Fit the tool **(Ms. 583)** and remove the cooling pipes from the turbocharger.

❑ Separate the clips (**5**) on the turbocharger cooling pipes using the tool **(Mot. 1448)**.

❑ Disconnect the turbocharger cooling pipes.

B84 or C84, and F4R, and 774

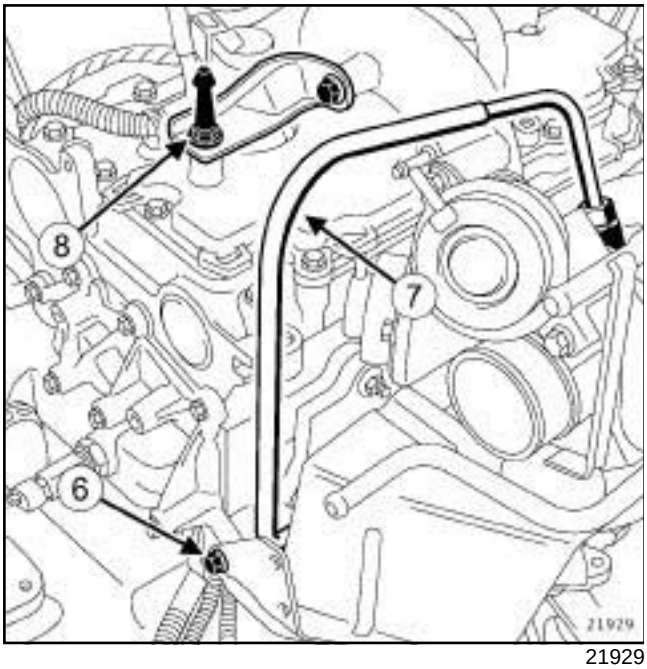

21929

❑ Remove:

- the heat shield bolt (**6**) ,
- the turbocharger oil supply pipe (**7**) ,
- the engine cover mounting and the turbocharger strut (**8**) ,
- the intercooler air inlet pipe.

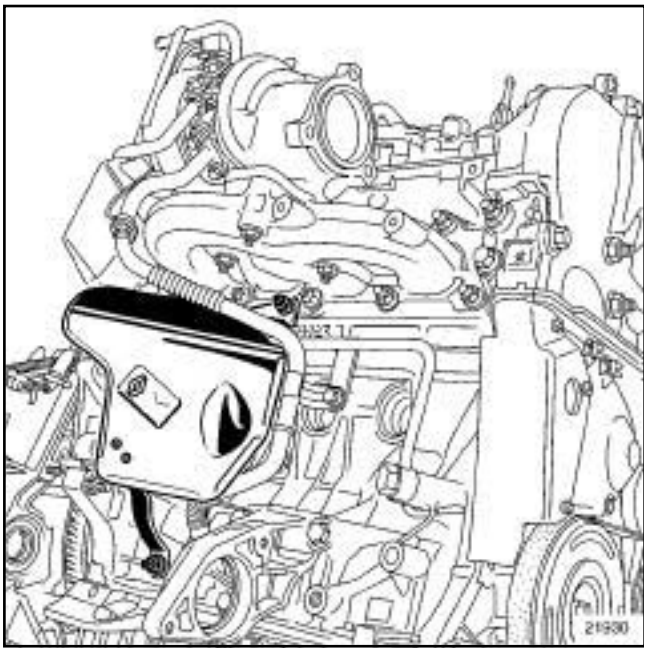

21930

❑ Remove the starter heat shield.

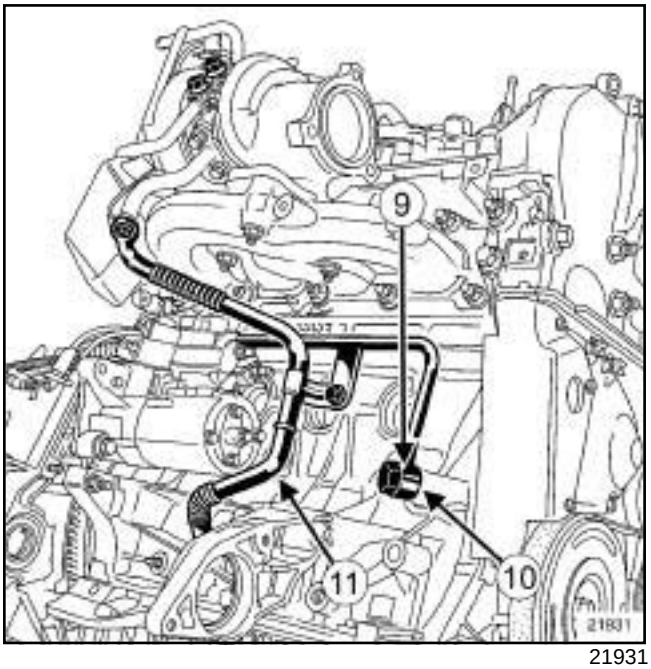

21931

❑ Remove:

- the bolts (**9**) from the turbocharger oil return pipe,
- the turbocharger oil return pipe (**11**) ,
- the turbocharger oil supply pipe (**10**) .

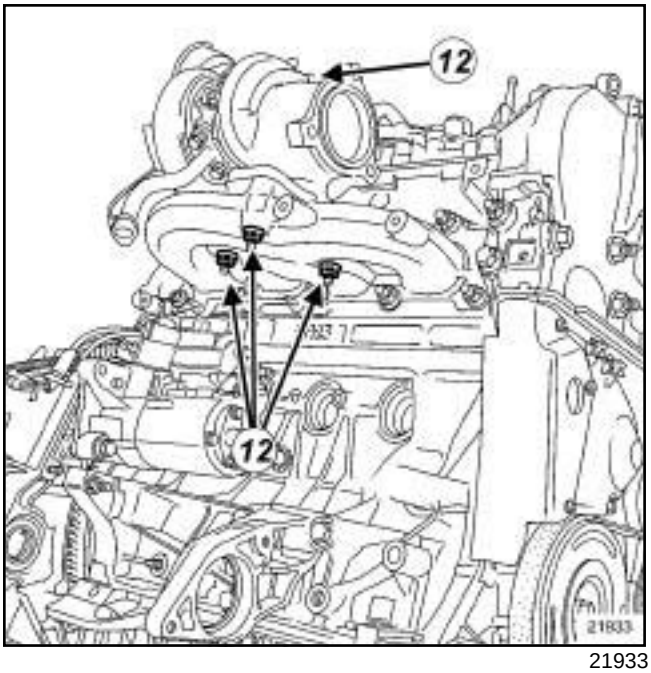

21933

❑ Remove:

- the nuts (**12**) from the turbocharger on the manifold,
- the turbocharger.

B84 or C84, and F4R, and 774

REFITTING

- ❑ **parts always to be replaced: seal between turbocharger and catalytic converter (10,09,01,08)**.
- ❑ **parts always to be replaced: catalytic converter stud on the turbocharger (if loosened) (10,09,01,04)**.
- ❑ **parts always to be replaced: Turbocharger nut (10,09,01,03)**.

WARNING

Ensure that no foreign bodies enter the turbine or compressor during the refitting operation.

Check that the turbocharger oil return pipe is not partially or completely blocked by scale. Check that there are no leaks. If there are, replace the part.

WARNING

Following a turbocharger fault, check that the intercooler and air circuit assembly are not full of oil. If they are, remove them and clean them with a cleaning tray or station and dry them with a compressed air gun.

WARNING

Metal objects may enter the oil and air circuits as a result of a broken turbocharger.

Failure to observe the following instructions will lead to the turbocharger breaking again.

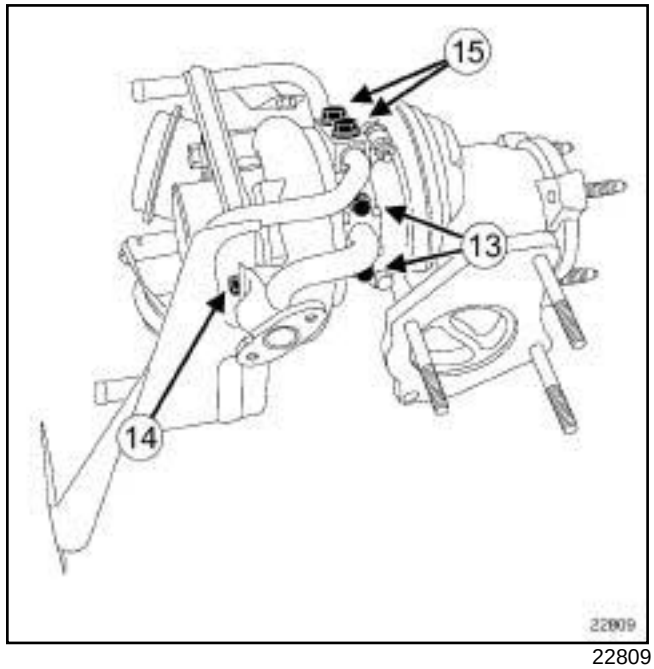

22809

❑ On the workbench, refit and tighten to torque:

- the **oil return pipe bolts on the cylinder block (12 N.m)** (**13**) ,
- the **oil return pipe bolt (12 N.m)** (**14**) ,
- the **turbocharger cooling duct bolts (initial torque) (12 N.m)** (**15**) ,
- the **turbocharger cooling duct bolts (27 N.m)**.

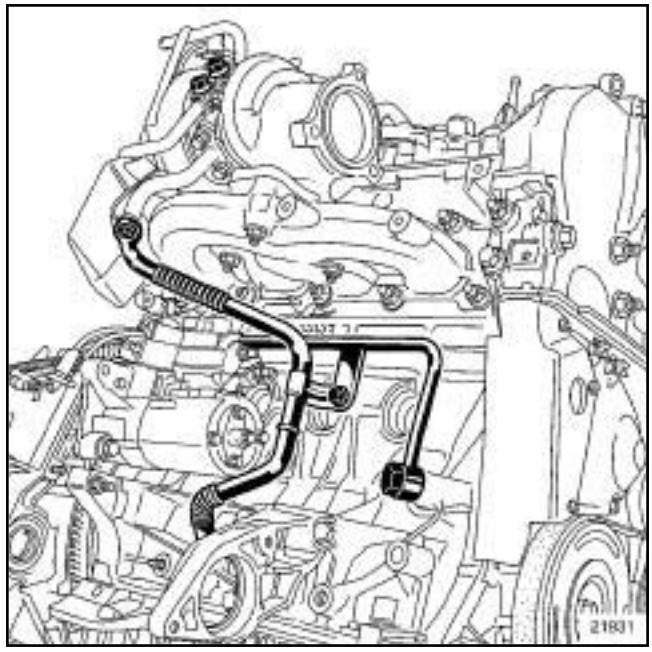

21931

❑ Fit:

- the turbocharger on the exhaust manifold,
- the oil supply pipe on the turbocharger,

B84 or C84, and F4R, and 774

- the fuel return pipe to the cylinder block,
- the intercooler air inlet pipe,
- the turbocharger strut.

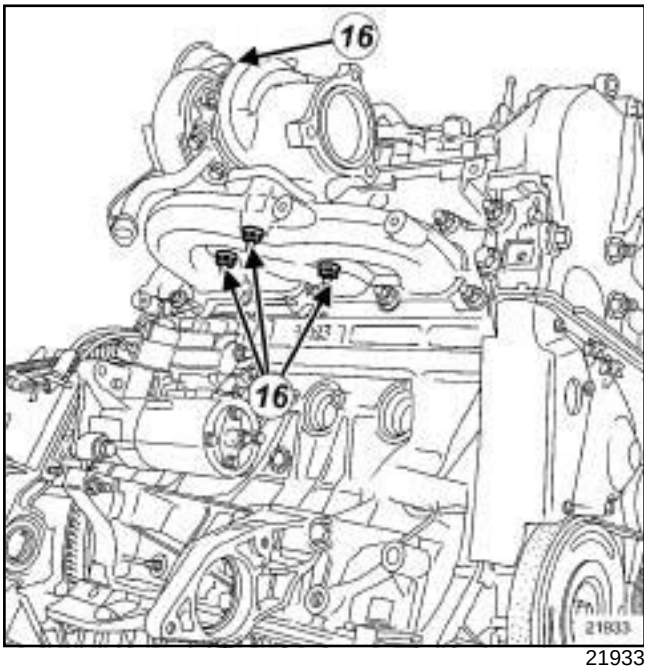

21933

❑ Tighten to torque and angle:

- the **turbocharger bolts (15 N.m + 75°)**,
- the **oil supply pipe bolts (21 N.m)**,
- the **oil supply pipe hollow bolt (45 N.m)**.

❑ Proceed in the reverse order to removal.

> Note:
>
> Always replace all of the removed seals, including those of the cooling duct as well as the intercooler air inlet pipes.

❑ Fill and bleed the cooling system (see **19A**, **Cooling**, **Cooling circuit: Draining - Refilling**, page **19A-15**) .

❑ Run the starter motor until the oil pressure warning light goes out (wait for a few seconds).

❑ Start the engine then accelerate with no load several times.

❑ Switch off the ignition and check that there are no oil leaks.

❑ Let the engine run at idle speed until the engine cooling fan starts to operate.

❑ Accelerate several times with no load then carry out a road test.

❑ Switch off the ignition and check that there are no oil leaks.

❑ Clear the faults using the **diagnostic tool**.

B84 or C84 or E84 or K84 or L84, and M9R, and 700

Essential equipment
roller-type stud removal tool
tweezers
diagnostic tool

Tightening torques ▽	
exhaust manifold stud	**9 Nm**
studs on the turbocharger	**14.5 Nm**
turbocharger strut bolt on the flywheel end	**25 Nm**
turbocharger lower nuts	**28 Nm**
turbocharger upper nut	**28 Nm**
turbocharger transversal bolt	**25 Nm**
turbocharger strut bolt on the timing end	**25 Nm**
intercooler air inlet pipe bolts	**8 Nm**
air filter box air outlet pipe clip on the turbocharger side	**5.5 Nm**

IMPORTANT
Wear protective gloves during the operation.

REMOVAL

I - REMOVAL PREPARATION OPERATION

❑ Position the vehicle on a two-post lift (see **Vehicle: Towing and lifting**) (MR 364, 02A, Lifting equipment).

❑ Remove the front engine cover.

❑ Disconnect the battery (see **Battery: Removal - Refitting**) (MR 364, 80A, Battery).

❑ Remove:

- the engine undertray bolts,
- the engine undertray,
- the catalytic converter (see **19B**, **Exhaust**, **Catalytic converter: Removal - Refitting**, page **19B-46**) ,
- the turbocharger oil pipe (see **12B**, **Turbocharging**, **Turbocharger oil pipe: Removal - Refitting**, page **12B-52**) .

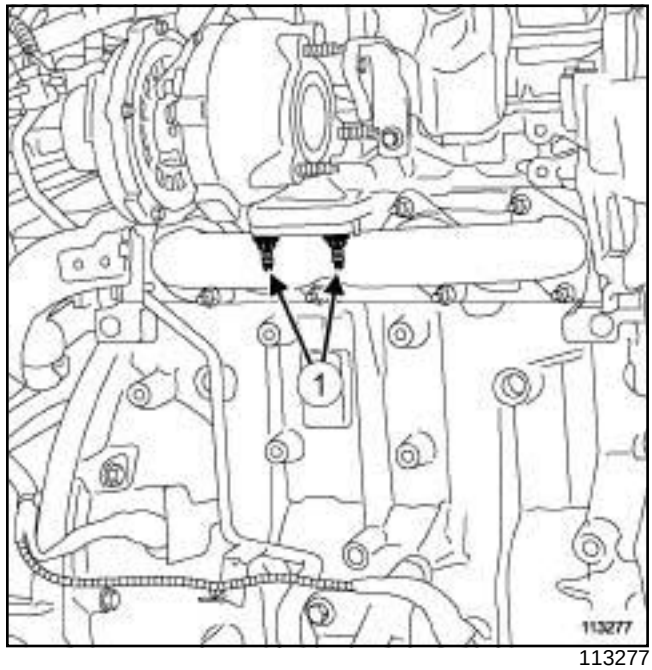

113277

❑ Remove the turbocharger lower nuts (**1**) .

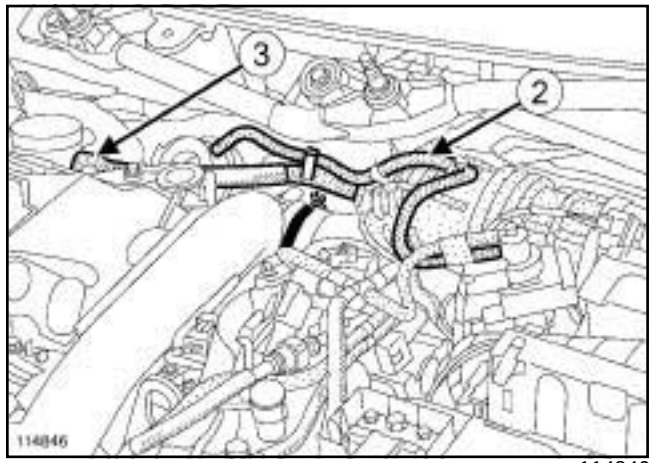

114846

❑ Disconnect:

- the hose (**2**) from the turbocharging pressure regulator on the control diaphragm,
- the oil vapour rebreathing hose (**3**) from the oil decanter.

❑ Loosen the air filter unit air outlet pipe clip on the turbocharger side.

❑ Disconnect the air filter unit air outlet pipe on the turbocharger side.

B84 or C84 or E84 or K84 or L84, and M9R, and 700

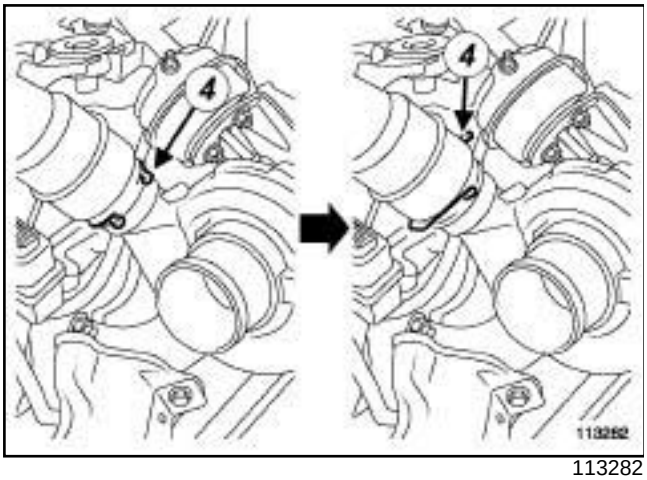

113282

❑ Pivot the intercooler air inlet pipe clip (**4**) on the turbocharger.

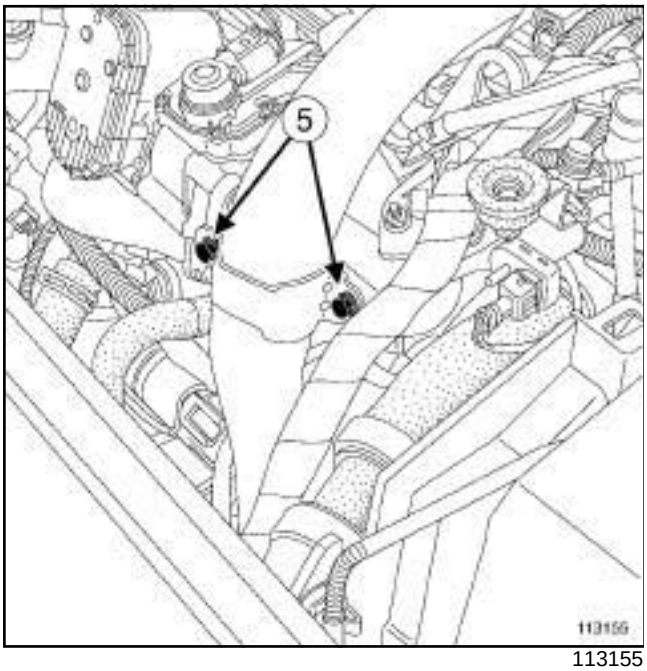

113155

❑ Remove the bolts (**5**) from the intercooler air inlet pipe on the intake distributor.

❑ Move the intercooler air inlet pipe towards the intercooler.

II - OPERATION FOR REMOVAL OF PART CONCERNED

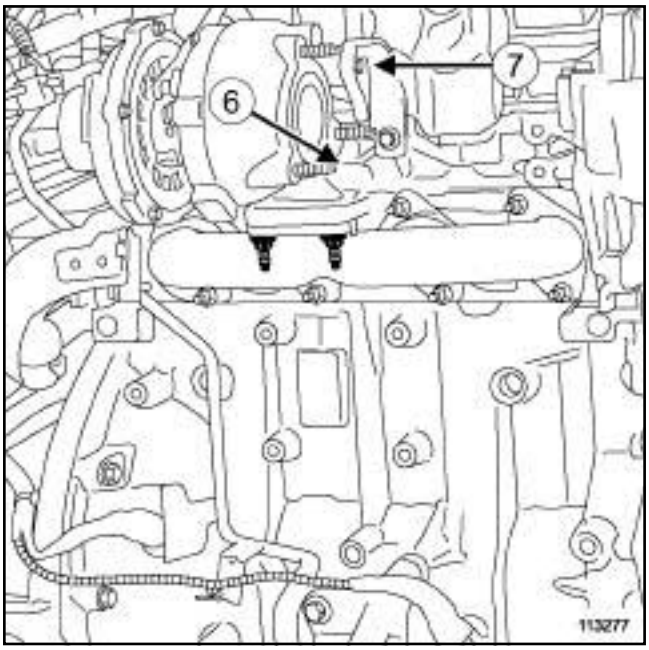

113277

❑ Remove:

- the upper nut (**6**) from the turbocharger on the exhaust manifold,
- the transversal bolt (**7**) from the turbocharger,
- the turbocharger,
- the gasket between the turbocharger and the exhaust manifold.

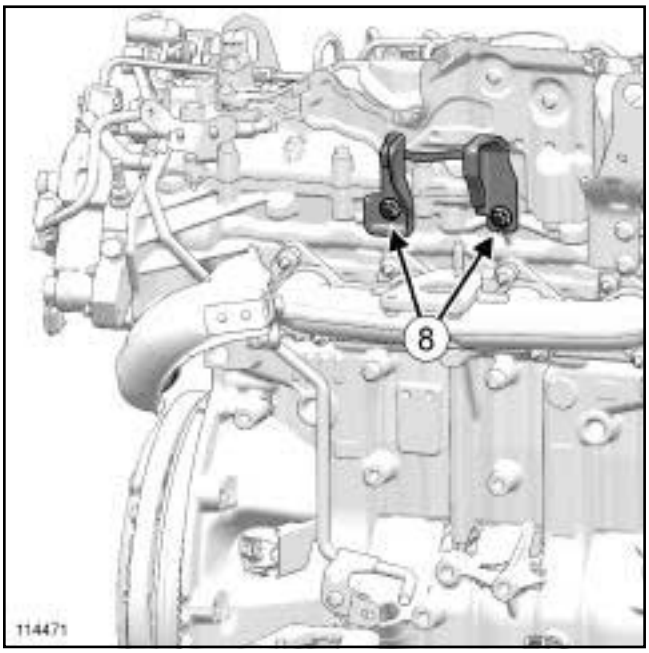

114471

❑ Remove:

- the bolts (**8**) from the turbocharger strut,

B84 or C84 or E84 or K84 or L84, and M9R, and 700

- the turbocharger strut.

REFITTING

I - REFITTING PREPARATIONS OPERATION

❏ Clean and degrease the following mating faces:

- the exhaust manifold,
- of the turbocharger if reused.

❏ Remove the stud on the exhaust manifold using a **roller-type stud removal tool**.

❏ Refit a new stud to the exhaust manifold using a **roller-type stud removal tool**.

❏ Torque tighten the **exhaust manifold stud (9 Nm)**.

❏ Remove the turbocharger studs if the turbocharger is being reused.

❏ Refit the new studs onto the turbocharger if the turbocharger is being reused.

❏ Torque tighten the **studs on the turbocharger (14.5 Nm)**.

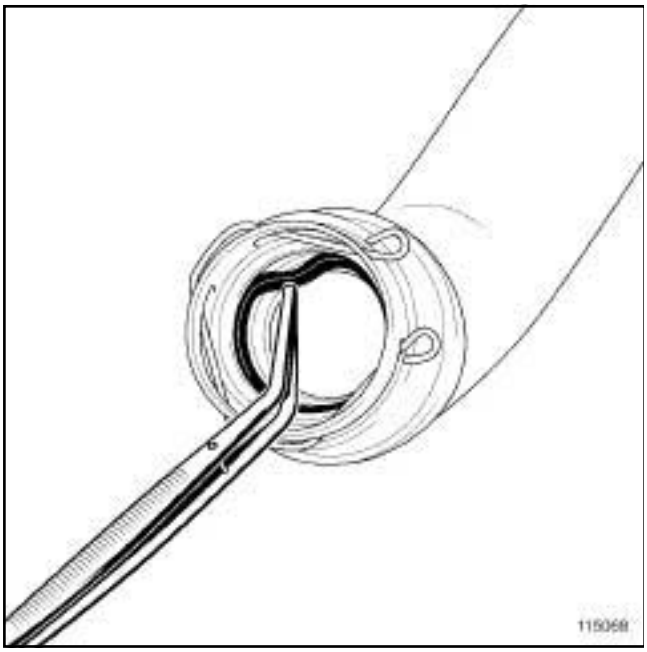

115068

❏ Remove the intercooler air inlet pipe seal using a **tweezers**.

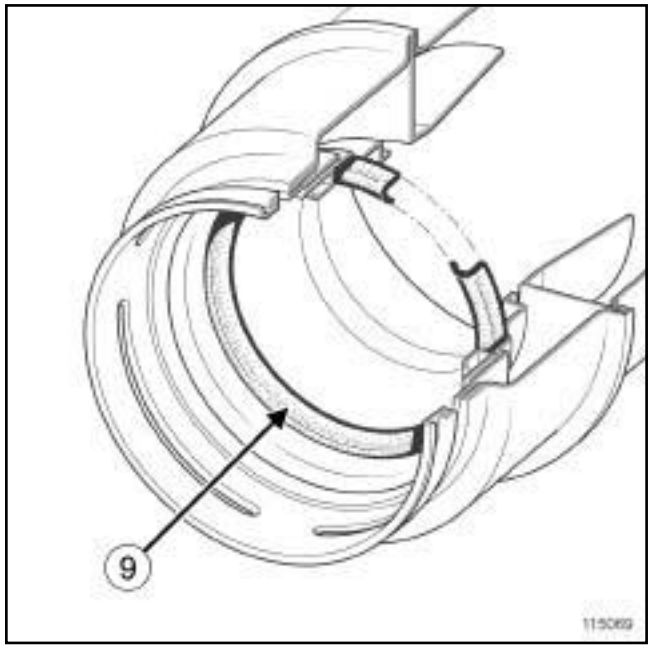

115069

❏ Fit a new seal to the intercooler air inlet pipe on the turbocharger side.

> Note:
>
> Check that the seal (**9**) on the intercooler air inlet pipe is fitted the correct way round.

B84 or C84 or E84 or K84 or L84, and M9R, and 700

II - REFITTING OPERATION FOR PART CONCERNED

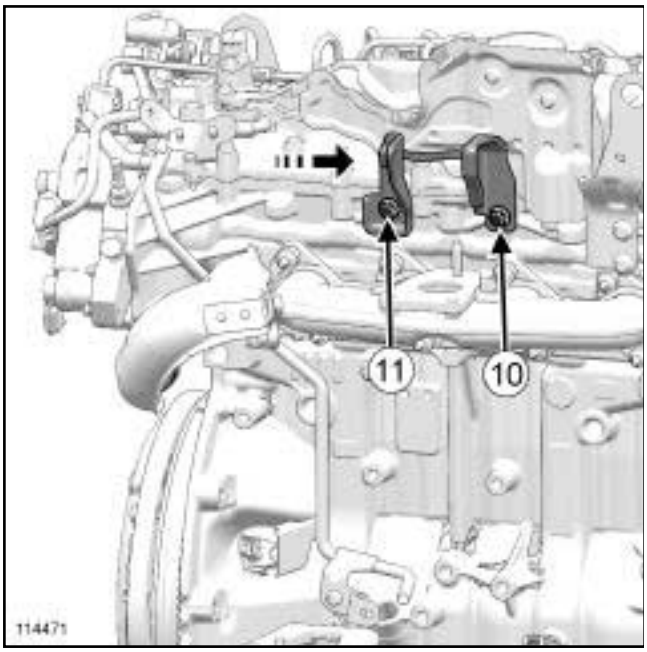

114471

- ❑ Fit the new turbocharger strut.
- ❑ Finger tighten the bolts (**10**) and (**11**) on the turbocharger strut.

> **WARNING**
> The turbocharger strut must move freely.

- ❑ Fit the turbocharger without its seal and hold the turbocharger flat against the exhaust manifold.
- ❑ Move the turbocharger strut until it is against the turbocharger at the flywheel end.
- ❑ Tighten the turbocharger strut bolt on the timing end slightly (**10**) .

> **WARNING**
> Do not tighten the bolt too quickly to prevent the turbocharger strut from rotating.

- ❑ Move the turbocharger to one side.
- ❑ Tighten to torque the **turbocharger strut bolt on the flywheel end (25 Nm)** (**11**) .
- ❑ Position a new seal between the turbocharger and the exhaust manifold.
- ❑ Refit the turbocharger.
- ❑ Finger tighten the new transversal bolt on the turbocharger by several turns.
- ❑ Without tightening, fit:
  - the new turbocharger upper nut,
  - the new turbocharger lower nuts.
- ❑ Torque tighten:
  - the **turbocharger lower nuts (28 Nm)**,
  - the **turbocharger upper nut (28 Nm)**.
- ❑ Undo the turbocharger strut bolt on the timing end (**10**) .
- ❑ Torque tighten:
  - the **turbocharger transversal bolt (25 Nm)**,
  - the **turbocharger strut bolt on the timing end (25 Nm)** (**10**) .

III - FINAL OPERATION.

- ❑ Rotate the intercooler air inlet pipe to refit the clip in its recess.
- ❑ Clip the intercooler air inlet pipe to the turbocharger.
- ❑ Refit the intercooler air inlet pipe bolts on the intake distributor.
- ❑ Torque tighten the **intercooler air inlet pipe bolts (8 Nm)**.
- ❑ Connect:
  - the air filter box air outlet pipe on the turbocharger,
  - the oil vapour rebreathing hose to the oil separator.
- ❑ Torque tighten the **air filter box air outlet pipe clip on the turbocharger side (5.5 Nm)**.
- ❑ Connect the turbocharging pressure regulator on the control diaphragm.
- ❑ Refit:
  - the turbocharger oil pipe (see **12B**, **Turbocharging**, **Turbocharger oil pipe: Removal - Refitting**, page **12B-52**) ,
  - the catalytic converter (see **19B**, **Exhaust**, **Catalytic converter: Removal - Refitting**, page **19B-46**) .
- ❑ Connect the battery (see **Battery: Removal - Refitting**) (MR 364, 80A, Battery).

Turbocharger lubrication circuit priming procedure

- ❑ Disconnect the injector rail pressure regulator connector (disables engine starting).
- ❑ Run the starter motor until the oil pressure warning light goes out (do this for a few seconds).
- ❑ Switch off the ignition.

B84 or C84 or E84 or K84 or L84, and M9R, and 700

- ❑ Connect the pressure regulator connector to the injection rail.
- ❑ Start the engine.
- ❑ Let the engine idle then depress the accelerator several times under no load.
- ❑ Switch off the ignition.
- ❑ Check that there are no oil leaks.
- ❑ Connect the **diagnostic tool** and clear the stored faults.
- ❑ Refit:
  - the engine undertray,
  - the engine cover.

B84 or C84 or E84 or K84, and M9R, and 722 or 724

Essential special tooling	
Mot. 1448	Long nose pliers for hose clips.

Essential equipment
roller-type stud removal tool
tweezers

Tightening torques ▽	
turbocharger studs	**14.5 N.m**
exhaust manifold stud	**9 N.m.**
turbocharger strut bolt on the flywheel end	**25 N.m**
lower nuts on the turbocharger (initial torque)	**12 N.m**
upper nut on the turbocharger (initial torque)	**12 N.m**
turbocharger lower nuts	**21 N.m**
turbocharger upper nut	**21 N.m**
turbocharger transversal bolt	**25 N.m**
turbocharger strut bolt on the timing end	**25 N.m**
exhaust gas temperature sensor	**40 N.m**
lower engine tie-bar mounting bolts	**62 N.m**
reinforcement lower cross member nuts	**62 N.m**

IMPORTANT
Wear protective gloves during the operation.

REMOVAL

I - REMOVAL PREPARATION OPERATION

❑ Position the vehicle on a two-post lift (see **Vehicle: Towing and lifting**) (MR 364, 02A, Lifting equipment).

❑ Disconnect the battery (see **Battery: Removal - Refitting**) (MR 364, 80A, Battery).

❑ Remove:

- the engine cover,
- the front wiper arms (see **Windscreen wiper arm: Removal - Refitting**) (MR 364, 85A, Wiping - Washing),
- the scuttle panel grille (see **Scuttle panel grille: Removal - Refitting**) (MR 365, 56A, Exterior equipment),
- the acoustic protection clips on the scuttle panel partition,
- the acoustic protection,
- the engine undertray bolts,
- the engine undertray,
- the front right-hand wheel (see **Wheel: Removal - Refitting**) (MR 364, 35A, Wheels and tyres),

M9R, and 724

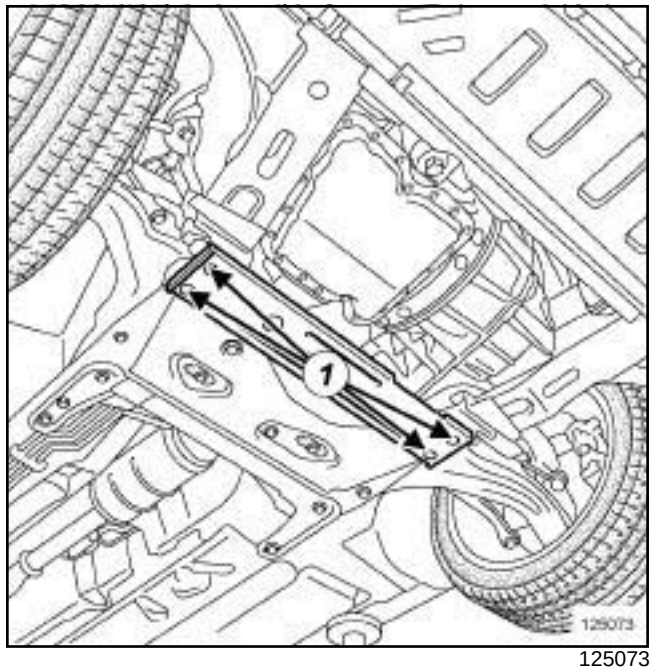

125073

❑ Remove:

- the reinforcement lower cross member nuts (**1**) ,
- the reinforcement lower cross member.

❑ Remove the electric coolant pump from its mounting.

B84 or C84 or E84 or K84, and M9R, and 722 or 724

❏ Drain the manual gearbox (see **Manual gearbox oil: Draining - Refilling**) (MR 364, 21A, Manual gearbox).

❏ Remove:

- the front right-hand driveshaft (see **Front right-hand wheel driveshaft: Removal - Refitting**) (MR 364, 29A, Driveshafts),
- the lower engine tie-bar (see **19D**, **Engine mounting**, **Lower engine tie-bar: Removal - Refitting**, page **19D-36**) .

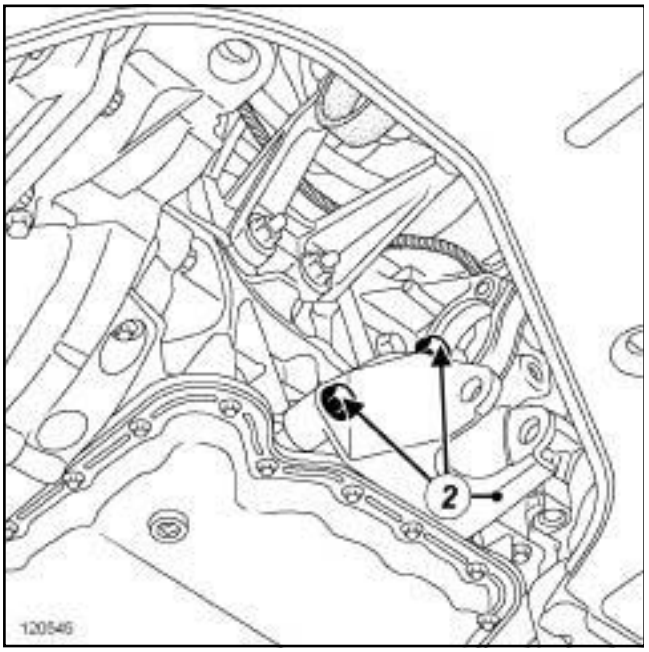

120545

❏ Remove:

- the lower engine tie-bar mounting bolts (**2**) ,
- the lower engine tie-bar mounting.

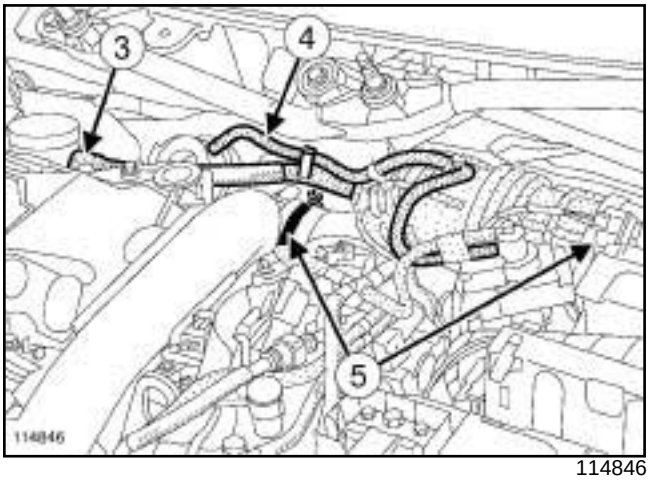

114846

❏ Disconnect:

- the oil vapour rebreathing hose (**3**) from the oil decanter.
- the turbocharging pressure regulator hose (**4**) from the turbocharger.

❏ Undo the air filter unit air outlet pipe clips (**5**) .

❏ Remove the air filter box air outlet pipe.

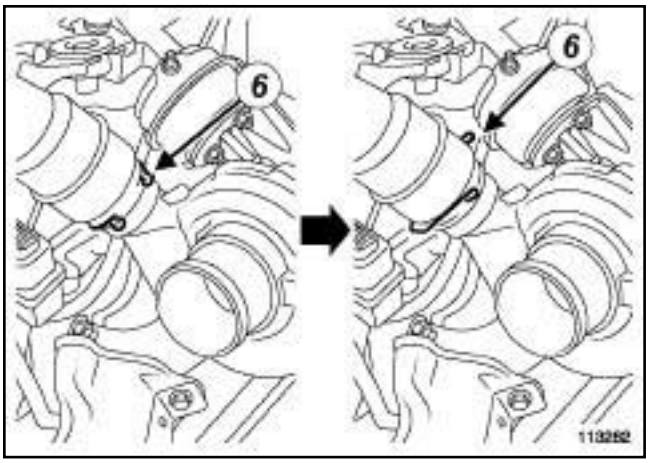

113282

❏ Rotate the intercooler air inlet pipe clip (**6**) .

B84 or C84 or E84 or K84, and M9R, and 722 or 724

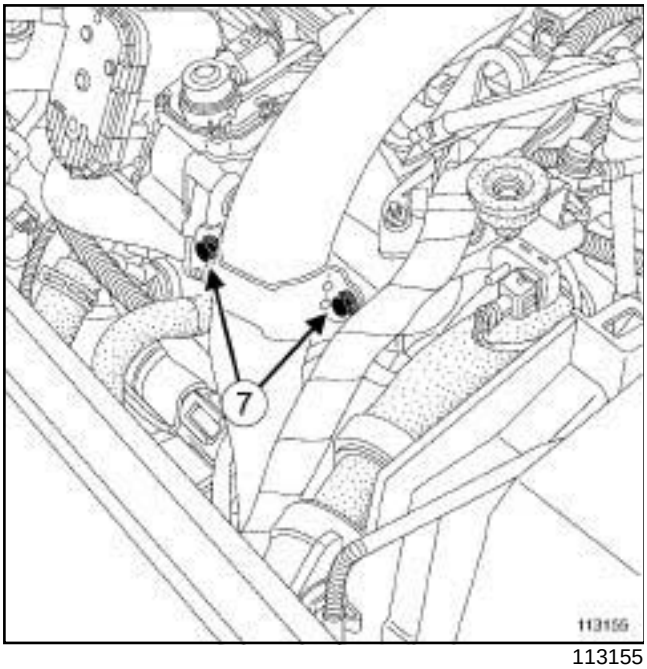

113155

❑ Remove the intercooler air inlet pipe bolts (**7**) .

❑ Move the intercooler inlet air pipe to one side.

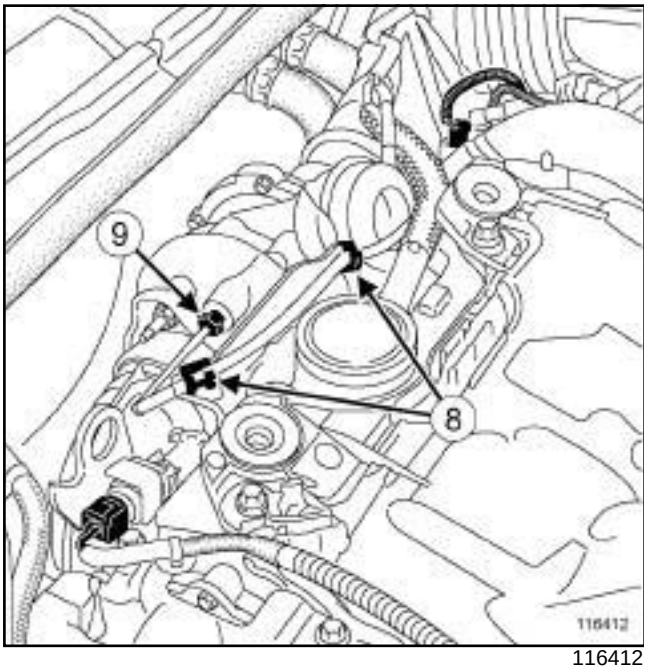

116412

❑ Unpick the exhaust gas temperature sensor wiring harness at (**8**) .

❑ Remove the exhaust gas temperature sensor (**9**) using a crow foot wrench.

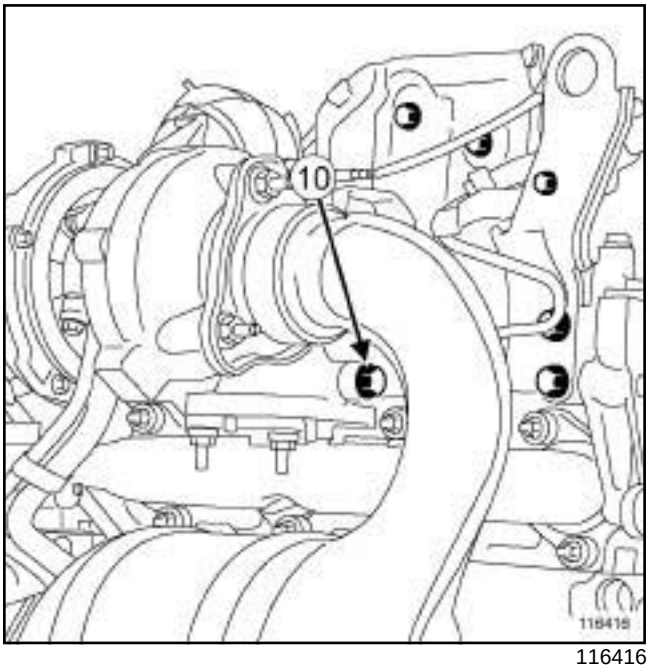

116416

❑ Remove the exhaust gas pressure sensor bolt (**10**) .

❑ Remove:

- the catalytic pre-converter (see **19B**, **Exhaust**, **Catalytic pre-converter: Removal - Refitting**, page **19B-29**) ,
- the seal between the turbocharger and the catalytic pre-converter,
- the seal between the catalytic pre-converter and the particle filter.

B84 or C84 or E84 or K84, and M9R, and 722 or 724

II - REMOVAL OPERATION FOR PART CONCERNED

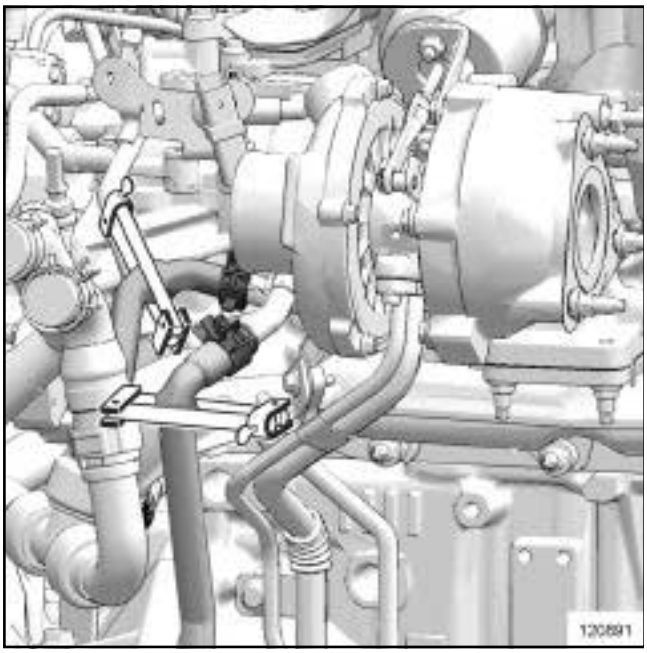

120891

- ❑ Fit hose clamps to the turbocharger cooling hoses.
- ❑ Move the cooling hose clips to one side using the **(Mot. 1448)**.
- ❑ Disconnect the turbocharger cooling hoses.
- ❑ Remove the oil pipe from the turbocharger (see **12B**, **Turbocharging**, **Turbocharger oil pipe: Removal - Refitting**, page **12B-52**) .

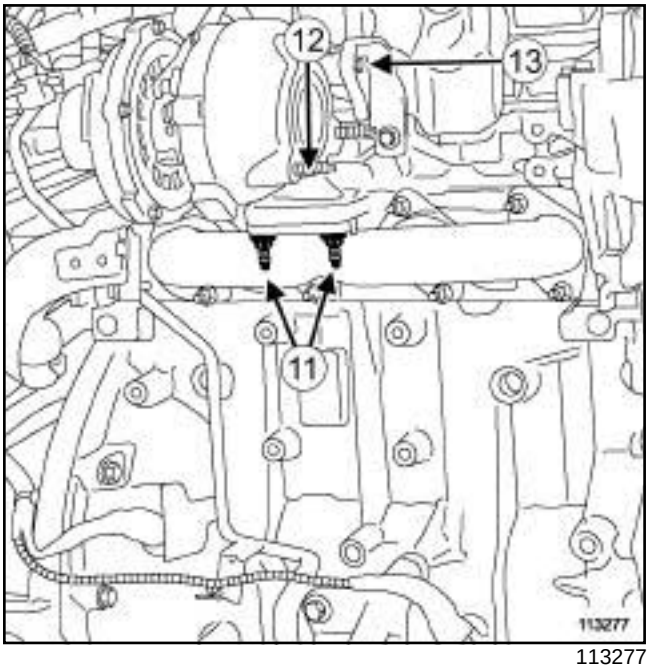

113277

- ❑ Remove:
  - the turbocharger lower nuts (**11**) on the exhaust manifold,
  - the turbocharger upper nuts (**12**) from the exhaust manifold,
  - the transversal bolt (**13**) from the turbocharger,
  - the turbocharger,
  - the gasket between the turbocharger and the exhaust manifold.

B84 or C84 or E84 or K84, and M9R, and 722 or 724

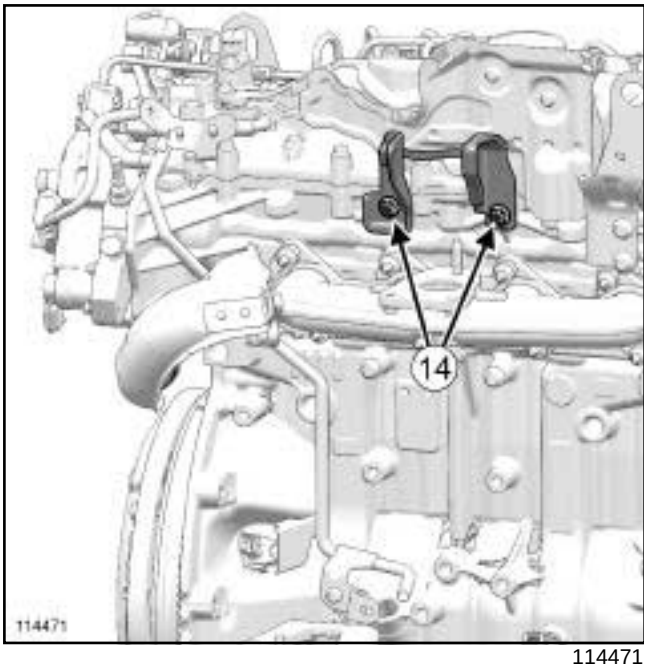

114471

❑ Remove:

- the bolts (**14**) from the turbocharger strut,
- the turbocharger strut.
- the exhaust manifold stud using a **roller-type stud removal tool**,
- the turbocharger stud, using a **roller-type stud removal tool**, if the turbocharger is to be reused.

REFITTING

I - REFITTING PREPARATIONS OPERATION

❑ Clean and degrease the bearing faces:

- on the exhaust manifold,
- of the turbocharger if reused.

> **WARNING**
> Ensure that no foreign bodies enter the turbine or compressor during the refitting operation.

❑ Always replace:

- the turbocharger and catalytic converter nuts,
- the turbocharger oil pipe and its seals,
- the turbocharger strut.
- the turbocharger transversal bolt,
- the seal between the turbocharger and the exhaust manifold,
- the seal between the turbocharger and the catalytic converter,
- the exhaust manifold stud,
- the turbocharger studs,
- the turbocharger coolant pipe,
- the turbocharger pipe seal.

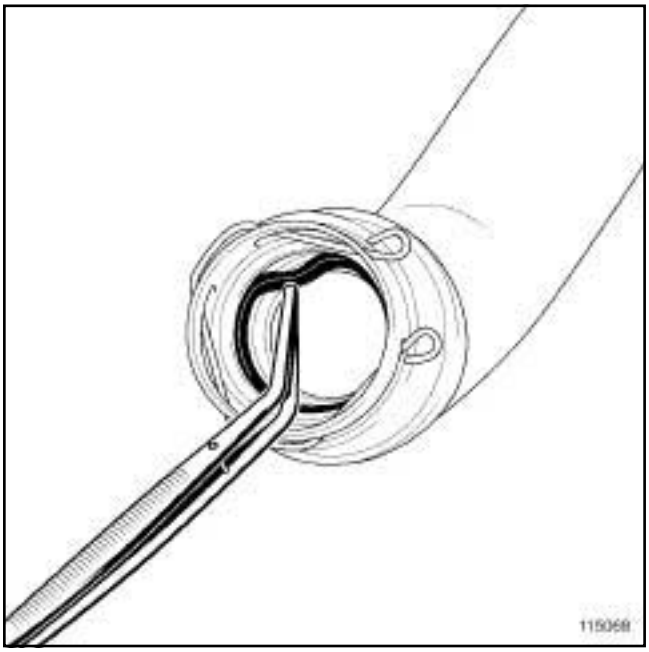

115068

❑ Remove the intercooler air inlet pipe seal using a **tweezers**.

B84 or C84 or E84 or K84, and M9R, and 722 or 724

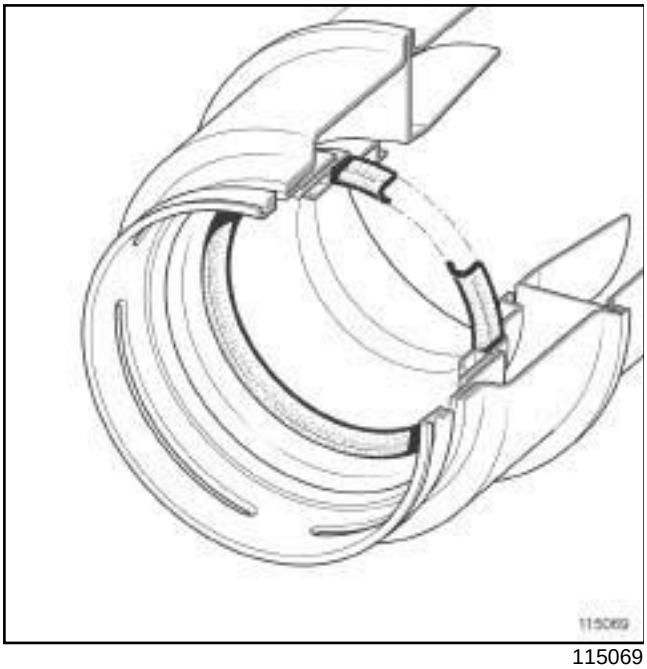

115069

❑ Refit the new intercooler air inlet pipe seal.

> Note:
>
> Check that the intercooler air inlet pipe seal is fitted the right way round.

If the turbocharger is to be reused

❑ Refit:

- the turbocharger studs,
- the exhaust manifold stud.

❑ Torque tighten:

- the **turbocharger studs (14.5 N.m)**,
- the **exhaust manifold stud (9 N.m.)**

B84 or C84 or E84 or K84, and M9R, and 722 or 724

II - REFITTING OPERATION FOR PART CONCERNED

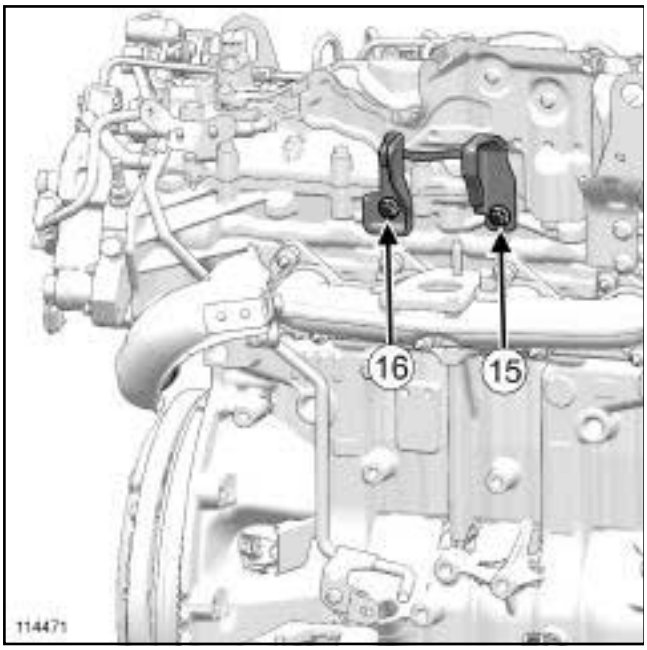

114471

- ❑ Fit the new turbocharger stay.
- ❑ Refit the bolts (**15**) and (**16**) on the turbocharger strut.

> Note:
>
> The turbocharger stay must move freely.

- ❑ Fit the turbocharger without its seal and hold the turbocharger flat against the exhaust manifold.
- ❑ Move the turbocharger strut until it is against the turbocharger at the flywheel end.
- ❑ Tighten the turbocharger strut bolt on the timing end slightly (**15**) .
- ❑ Move the turbocharger to one side.
- ❑ Tighten to torque the **turbocharger strut bolt on the flywheel end (25 N.m)** (**16**) .
- ❑ Position a new seal between the turbocharger and the exhaust manifold.
- ❑ Refit the turbocharger.
- ❑ Without tightening, fit:
  - the new turbocharger transverse bolt,
  - the new turbocharger upper nut,
  - the new turbocharger lower nuts.
- ❑ Torque tighten:
  - the **lower nuts on the turbocharger (initial torque) (12 N.m)**
  - the **upper nut on the turbocharger (initial torque) (12 N.m)**
- ❑ Torque tighten:
  - the **turbocharger lower nuts (21 N.m)**,
  - the **turbocharger upper nut (21 N.m)**.
- ❑ Undo the turbocharger strut bolt on the timing end (**15**) .
- ❑ Torque tighten:
  - the **turbocharger transversal bolt (25 N.m)**,
  - the **turbocharger strut bolt on the timing end (25 N.m)** (**15**) .
- ❑ Refit the oil pipe on the turbocharger (see **12B**, **Turbocharging**, **Turbocharger oil pipe: Removal - Refitting**, page **12B-52**) .
- ❑ Connect the turbocharger cooling hoses.
- ❑ Fit the coolant hose clips using the **(Mot. 1448)**.
- ❑ Remove the hose clips from the turbocharger cooling hoses.

III - FINAL OPERATION.

- ❑ Refit:
  - the seal between the catalytic pre-converter and the particle filter,
  - the seal between the turbocharger and the catalytic pre-converter,
  - the catalytic pre-converter (see **19B**, **Exhaust**, **Catalytic pre-converter: Removal - Refitting**, page **19B-29**) ,
  - the exhaust gas pressure sensor bolt,
  - the exhaust gas temperature sensor with a crow foot wrench.
- ❑ Torque tighten the **exhaust gas temperature sensor (40 N.m)**.
- ❑ Attach the exhaust gas temperature sensor wiring harness.
- ❑ Fit the intercooler air inlet pipe.
- ❑ Refit the intercooler air inlet pipe bolts.
- ❑ Rotate the intercooler air inlet pipe clip.
- ❑ Refit the air filter box air outlet pipe.
- ❑ Tighten the clips on the air filter box outlet air pipe.
- ❑ Connect:
  - the turbocharging pressure regulator hose on the turbocharger,
  - the oil vapour rebreathing hose to the oil separator.

B84 or C84 or E84 or K84, and M9R, and 722 or 724

❑ Refit:

- the lower engine tie-bar mounting,
- the lower engine tie-bar mounting bolts.

❑ Torque tighten the **lower engine tie-bar mounting bolts (62 N.m)**.

❑ Refit:

- the lower engine tie-bar (see **19D**, **Engine mounting**, **Lower engine tie-bar: Removal - Refitting**, page **19D-36**) ,
- the front right-hand driveshaft (see **Front right-hand wheel driveshaft: Removal - Refitting**) MR 364, 29A, Driveshafts.

❑ Fit the electric coolant pump onto its mounting.

M9R, and 724

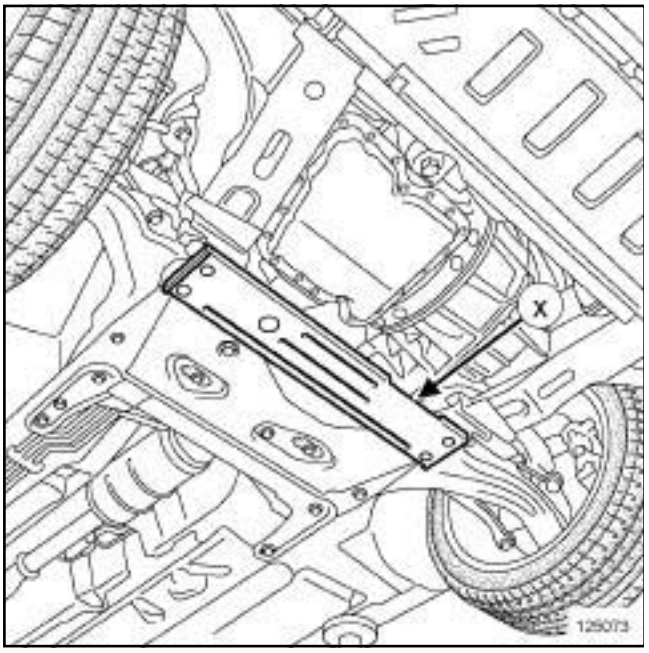

125073

❑

Note:

Position the indent (**x**) of the reinforcement lower cross member on the gearbox side.

❑ Refit:

- the reinforcement lower cross member,
- the reinforcement lower cross member nuts.

❑ Torque tighten the **reinforcement lower cross member nuts (62 N.m)**.

❑ Refit:

- the front right-hand wheel (see **Wheel: Removal - Refitting**) (MR 364, 35A, Wheels and tyres),
- the acoustic protection,
- the acoustic protection clips on the scuttle panel partition,
- the scuttle panel grille (see **Scuttle panel grille: Removal - Refitting**) (MR 365, 56A, Exterior equipment),
- the front wiper arms (see **Windscreen wiper arm: Removal - Refitting**) (MR 364, 85A, Wiping - Washing),
- the engine cover.

❑ Connect the battery (see **Battery: Removal - Refitting**) (MR 364, 80A, Battery).

❑ Fill the manual gearbox (see **Manual gearbox oil: Draining - Refilling**) (MR 364, 21A, Manual gearbox).

❑ Make sure the coolant fluid level is at the « Maximum » mark.

❑ Bleed the cooling system (see **19A**, **Cooling**, **Cooling circuit: Draining - Refilling**, page **19A-15**) .

❑ Refit:

- the engine undertray,
- the engine undertray bolts.

B84 or C84 or E84 or K84, and M9R, and 722 or 724

B84 or C84 or G84 or S84, and K9K, and 724

Essential special tooling	
Mot. 1711	Kit for measuring injector leak rate.

Essential equipment
diagnostic tool

Tightening torques ▽	
turbocharger studs on the exhaust manifold	**9 N.m**
turbocharger stud on the turbocharger	**9 N.m**
turbocharger lower nut on the exhaust manifold	**28 N.m**
turbocharger upper nuts on the exhaust manifold	**28 N.m**

REMOVAL

I - REMOVAL PREPARATION OPERATION

❑ Position the vehicle on a two-post lift (see **Vehicle: Towing and lifting**) (02A, Lifting equipment).

❑ Disconnect the battery (see **Battery: Removal - Refitting**) (80A, Battery).

❑ Remove the front engine cover.

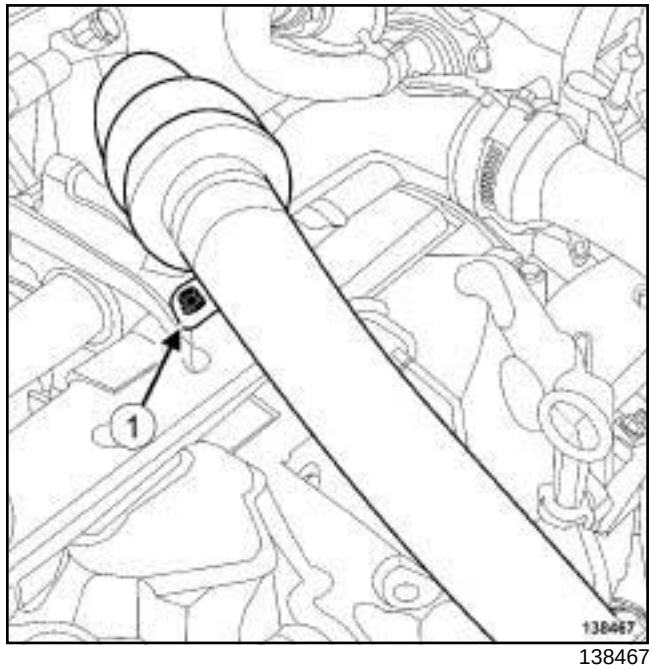

138467

❑ Remove the bolt (**1**) on the intercooler air inlet pipe.

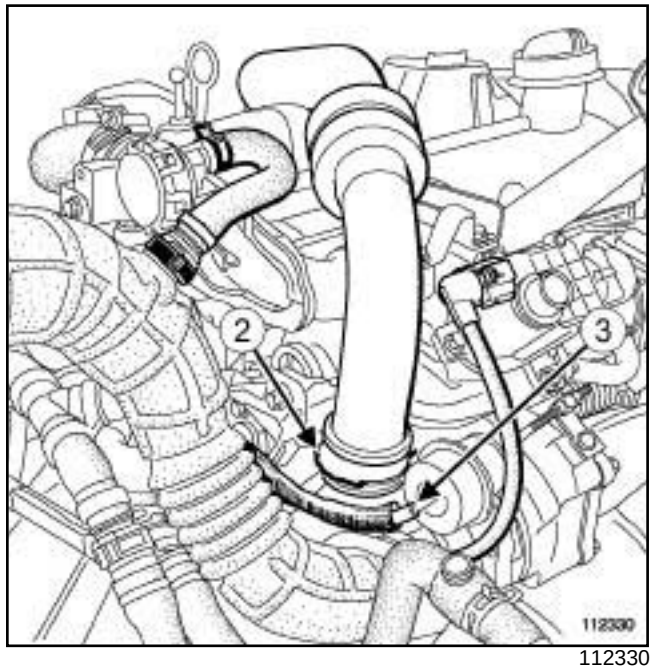

112330

❑ Pull the clip (**2**) of the intercooler air inlet pipe.

❑ Disconnect the intercooler air inlet pipe.

❑ Move aside the intercooler air inlet pipe.

❑ Disconnect the pipe (**3**) from the turbocharging pressure regulation valve.

B84 or C84 or G84 or S84, and K9K, and 724

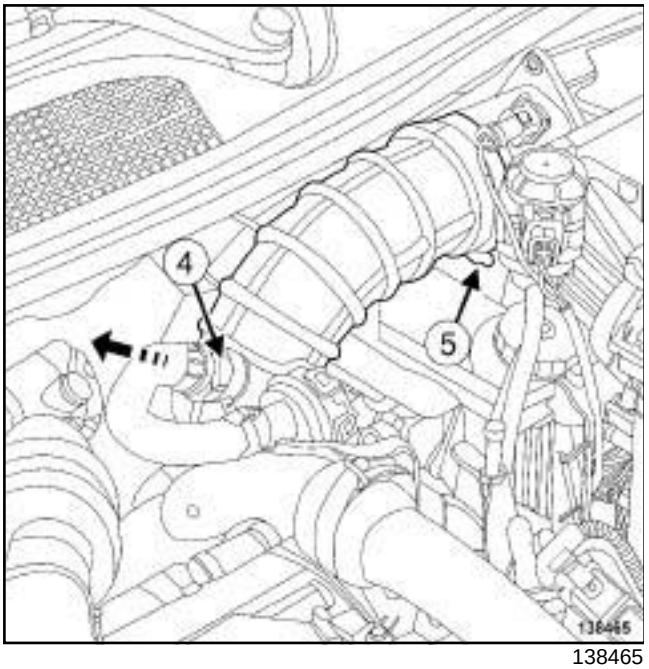

138465

❑ Unclip the oil vapour rebreathing pipe (**4**) .

❑ Undo:

- the air filter unit air outlet pipe clip (**5**) at the air filter unit end,
- the air filter unit air outlet pipe clip at the turbocharger end.

❑ Remove:

- the air filter unit air outlet pipe,
- the engine undertray bolts,
- the engine undertray,
- the lower engine tie-bar (see **19D**, **Engine mounting**, **Lower engine tie-bar: Removal - Refitting**, page **19D-36**) ,
- the catalytic converter (see **19B**, **Exhaust**, **Catalytic converter: Removal - Refitting**, page **19B-46**) ,
- the turbocharger oil pipes (see **12B**, **Turbocharging**, **Turbocharger oil pipe: Removal - Refitting**, page **12B-52**) .

II - OPERATION FOR REMOVAL OF PART CONCERNED

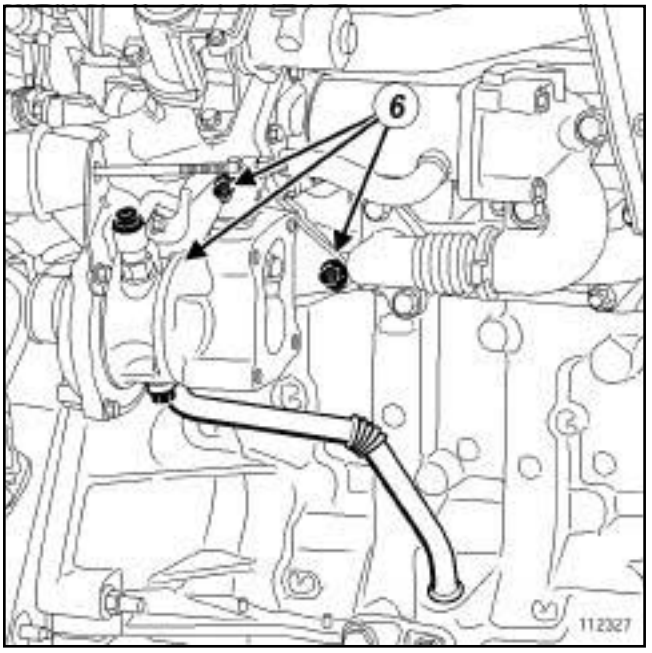

112327

❑ Remove:

- the turbocharger bolts (**6**) ,
- the turbocharger,
- the turbocharger seal.

REFITTING

I - REFITTING PREPARATION OPERATION

❑

> **WARNING**
> Metal objects may enter the oil and air circuits as a result of a broken turbocharger.
>
> Failure to observe the following instructions will lead to the turbocharger breaking again.

> **WARNING**
> Following a turbocharger fault, check that the intercooler and air circuit assembly are not full of oil. If they are, remove them and clean them with a cleaning tray or station and dry them with a compressed air gun.

> **WARNING**
> The turbocharger pressure regulator rod must not be adjusted.

B84 or C84 or G84 or S84, and K9K, and 724

- ❑ **parts always to be replaced: seal between exhaust manifold and turbocharger (10,09,01,07)**
- ❑ Clean the bearing faces using **ABRASIVE PADS** on:
  - the exhaust manifold in contact with the turbocharger,
  - the catalytic converter in contact with the turbocharger.
- ❑ Use **SURFACE CLEANER** (see **Vehicle: Parts and consumables for repair**) (04B, Consumables - Products) and clean cloths to degrease the mating faces:
  - the exhaust manifold in contact with the turbocharger,
  - the catalytic converter in contact with the turbocharger.
- ❑ If a replacement has been carried out, torque tighten:
  - the **turbocharger studs on the exhaust manifold (9 N.m)**,
  - the **turbocharger stud on the turbocharger (9 N.m)**.

II - REFITTING OPERATION FOR PART CONCERNED

❑

> **WARNING**
> Ensure that no foreign bodies enter the turbine or compressor during the refitting operation.
>
> Check that the turbocharger oil return pipe is not partially or completely blocked by scale. Check that there are no leaks. If there are, replace the part.

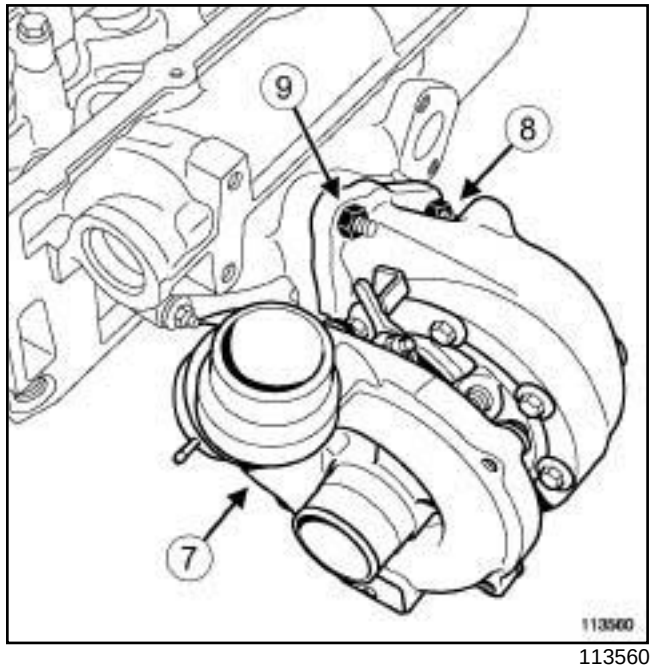

113560

- ❑ Fit the turbocharger with new seals on the exhaust manifold.
- ❑ Bolt without tightening the turbocharger nuts using an open-jawed spanner (the turbocharger must rest on the manifold and the spanner must no longer turn without effort).
- ❑ Put a paint mark on the turbocharger coinciding with a crest of the turbocharger lower nut (**7**) .
- ❑ Tighten the turbocharger lower nut until the next nut crest coincides with the paint mark made on the turbocharger (the final angle achieved is **60°**).
- ❑ Torque tighten:
  - the **turbocharger lower nut on the exhaust manifold (28 N.m)** (**8**) ,
  - the **turbocharger upper nuts on the exhaust manifold (28 N.m)** (**9**) .
- ❑ Refit the turbocharger oil pipes (see **12B**, **Turbocharging**, **Turbocharger oil pipe: Removal - Refitting**, page **12B-52**) .

III - FINAL OPERATION

- ❑ Refit:
  - the catalytic converter (see **19B**, **Exhaust**, **Catalytic converter: Removal - Refitting**, page **19B-46**) ,
  - the lower engine tie-bar (see **19D**, **Engine mounting**, **Lower engine tie-bar: Removal - Refitting**, page **19D-36**) ,
  - the engine undertray.

B84 or C84 or G84 or S84, and K9K, and 724

- ❑ Refit the air filter unit air outlet pipe.
- ❑ Connect the turbocharging pressure regulation valve pipe.
- ❑ Clip on the oil vapour rebreathing pipe.
- ❑ Refit the intercooler air inlet pipe.
- ❑ Clip on the clip of the intercooler air inlet pipe.
- ❑ Refit:
  - the bolt on the intercooler air inlet pipe,
  - the engine cover.
- ❑ Connect the battery (see **Battery: Removal - Refitting**) (80A, Battery).

Check

- ❑ Disconnect the injector connectors, or the connector for the rate of flow actuator, to connect the IMV test of tool **(Mot. 1711)**.
- ❑ Run the starter motor until the oil pressure warning light goes out (wait for a few seconds).
- ❑ Switch off the ignition.
- ❑ Make sure that there are no oil leaks.
- ❑ Connect the **diagnostic tool** and clear the stored faults.
- ❑ Refit the engine undertray.

B84 or C84 or E84 or K84 or L84, and M9R

Essential equipment
diagnostic tool

Tightening torques ▽	
turbocharger oil pipe bolts on the turbocharger	**10 Nm**
turbocharger oil pipe hollow bolt on the cylinder block	**16 Nm**
turbocharger oil pipe bolt on the cylinder block	**25 Nm**

REMOVAL

I - REMOVAL PREPARATION OPERATION

❑ Position the vehicle on a two-post lift (see **Vehicle: Towing and lifting**) (MR 364, 02A, Lifting equipment).

❑ Remove the front engine cover.

❑ Disconnect the battery (see **Battery: Removal - Refitting**) (MR 364, 80A, Battery).

❑ Remove:

- the engine undertray bolts,
- the engine undertray,
- the catalytic converter (see **19B**, **Exhaust**, **Catalytic converter: Removal - Refitting**, page **19B-46**) .

II - OPERATION FOR REMOVAL OF PART CONCERNED

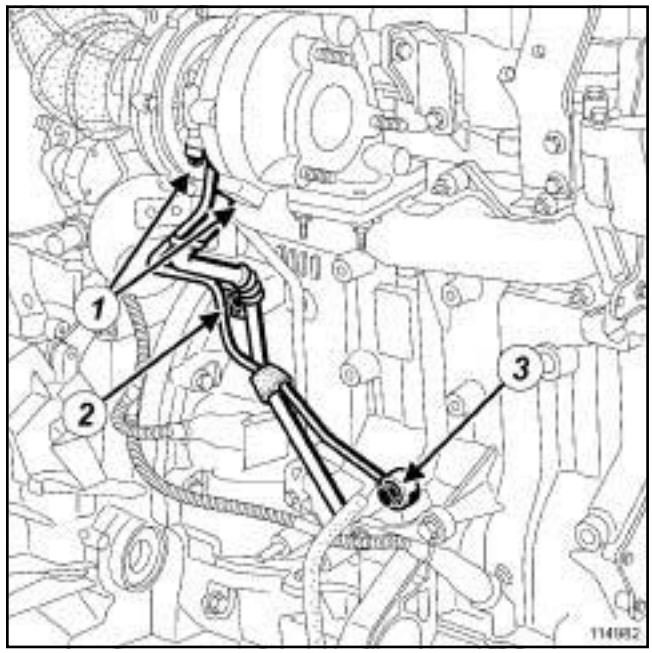

114982

❑ Remove:

- the bolts (**1**) from the oil pipe on the turbocharger,
- the bolt (**2**) from the oil pipe on the cylinder block,
- the hollow bolt (**3**) mounting the turbocharger oil pipe on the cylinder block,
- the turbocharger oil pipe.

B84 or C84 or E84 or K84 or L84, and M9R

REFITTING

I - REFITTING OPERATION FOR PART CONCERNED

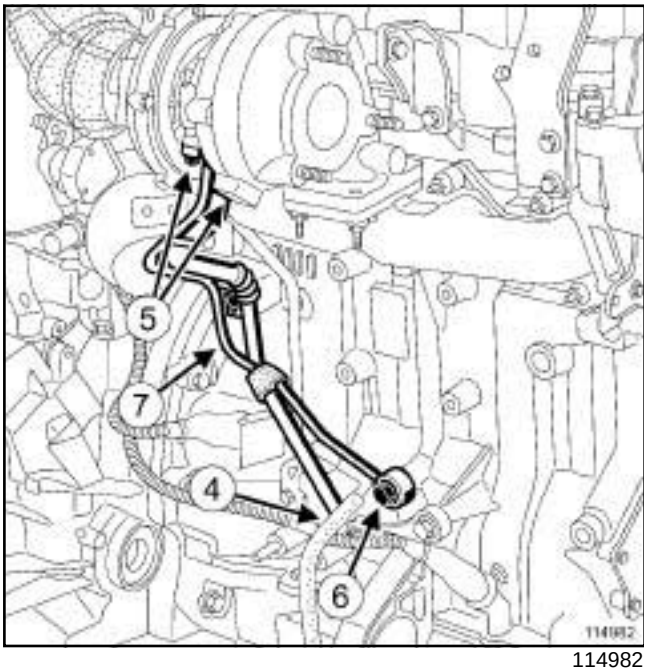

114982

- ❑ Lubricate the new turbocharger oil pipe O-ring, cylinder block end.
- ❑ Check for the seal between the turbocharger and the turbocharger oil pipe.
- ❑ Remove the protective plug on the oil supply union.
- ❑ Position the turbocharger oil pipe, first fitting it inside the cylinder block (**4**) .

> Note:
>
> Do not rotate the turbocharger oil pipe O-ring at the cylinder block end when fitting.

- ❑ Check:
  - after fitting, that the turbocharger oil pipe O-ring on the cylinder block end has not come out of its housing.
  - for the two copper seals on the oil supply union, cylinder block end.
- ❑ In order, fit (without tightening):
  - the turbocharger oil pipe bolts (**5**) on the turbocharger,
  - the hollow bolt (**6**) mounting the turbocharger oil pipe on the cylinder block,
  - the turbocharger oil pipe bolt (**7**) on the cylinder block.
- ❑ Torque tighten and in order:
  - the **turbocharger oil pipe bolts on the turbocharger (10 Nm)**,
  - the **turbocharger oil pipe hollow bolt on the cylinder block (16 Nm)**,
  - the **turbocharger oil pipe bolt on the cylinder block (25 Nm)**.

II - FINAL OPERATION.

- ❑ Refit the catalytic converter (see **19B**, **Exhaust**, **Catalytic converter: Removal - Refitting**, page **19B-46**) .
- ❑ Connect the battery (see **Battery: Removal - Refitting**) (MR 364, 80A, Battery).

Turbocharger lubrication circuit priming procedure

- ❑ Disconnect the injector rail pressure regulator connector (disables engine starting).
- ❑ Run the starter motor until the oil pressure warning light goes out (do this for a few seconds).
- ❑ Switch off the ignition.
- ❑ Connect the pressure regulator connector to the injection rail.
- ❑ Start the engine.
- ❑ Let the engine idle then depress the accelerator several times under no load.
- ❑ Switch off the ignition.
- ❑ Check that there are no oil leaks.
- ❑ Connect the **diagnostic tool** and clear the stored faults.
- ❑ Refit:
  - the engine undertray,
  - the engine cover.

K9K

Essential special tooling	
Mot. 1746	Offset spanner for tightening high pressure pump pipes.

Tightening torques ▽	
turbocharger oil supply pipe hollow bolt (turbocharger end)	**torx head bolt 18 N.m or bolt with head type H 14 N.m**
turbocharger oil supply pipe nut (cylinder head side)collar nut 35 N.m or non-collar nut	**23 N.m**
air filter box air outlet pipe clips	**5.5 Nm**
turbocharger oil return pipe bolts	**12 N.m**

IMPORTANT
Wear latex gloves during the operation.

IMPORTANT
Wear protective gloves during the operation.

WARNING
Prepare for the flow of fluid, and protect the surrounding components.

Note:
This procedure deals with removing and refitting the turbocharger oil return pipe and the turbocharger oil supply pipe.

REMOVING THE TURBOCHARGER OIL SUPPLY PIPE

I - REMOVAL PREPARATION OPERATION

❑ Position the vehicle on a two-post lift (see **Vehicle: Towing and lifting**) (02A, Lifting equipment).

❑ Remove:

- the engine cover,
- the battery (see **Battery : Removal - Refitting**) (80A, Battery),
- the battery tray (see **Battery tray: Removal - Refitting**) (80A, Battery).

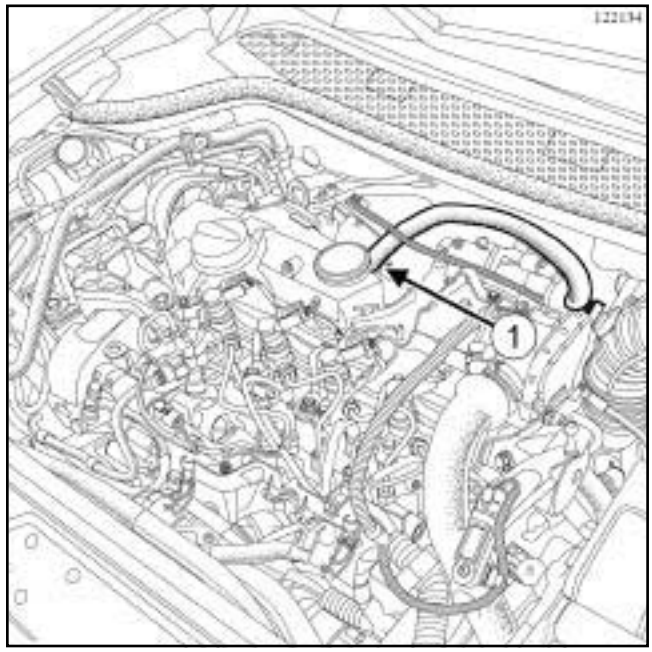

122134

❑ Disconnect the oil vapour rebreathing pipe (**1**) on the rocker cover side.

K9K

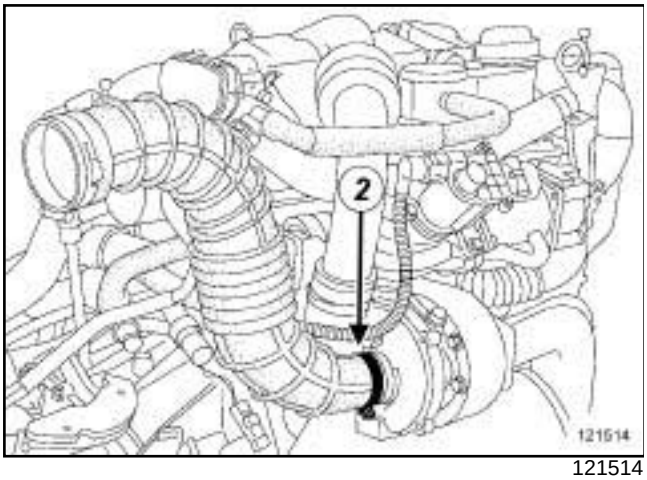

121514

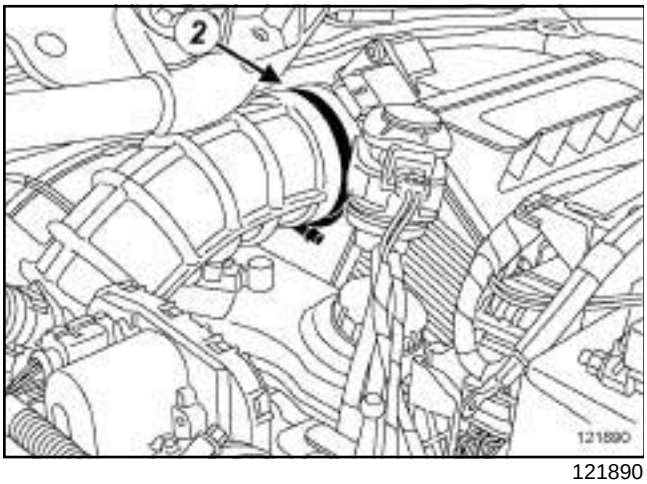

121890

❑ Undo the clips (**2**) for the air filter unit air outlet pipe.

❑ Disconnect the air outlet pipe from the air filter unit.

❑ Remove the air outlet pipe from the air filter box.

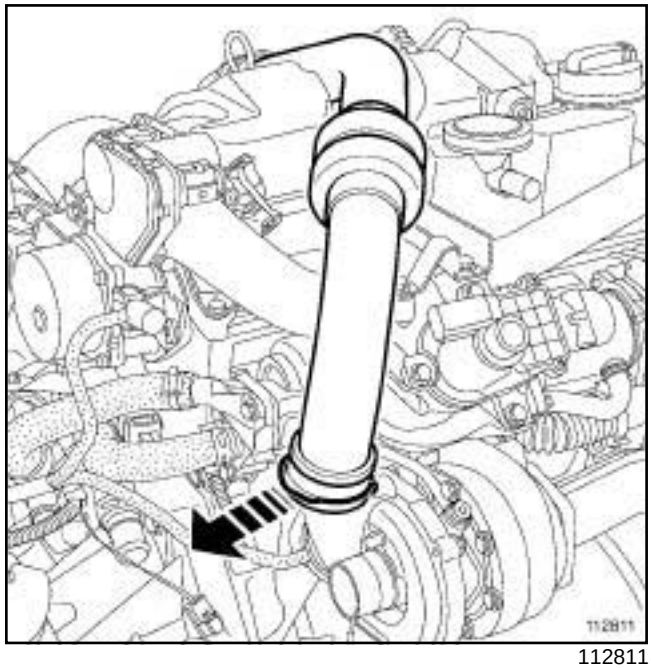

112811

❑ Pull the clip from the intercooler air inlet pipe.

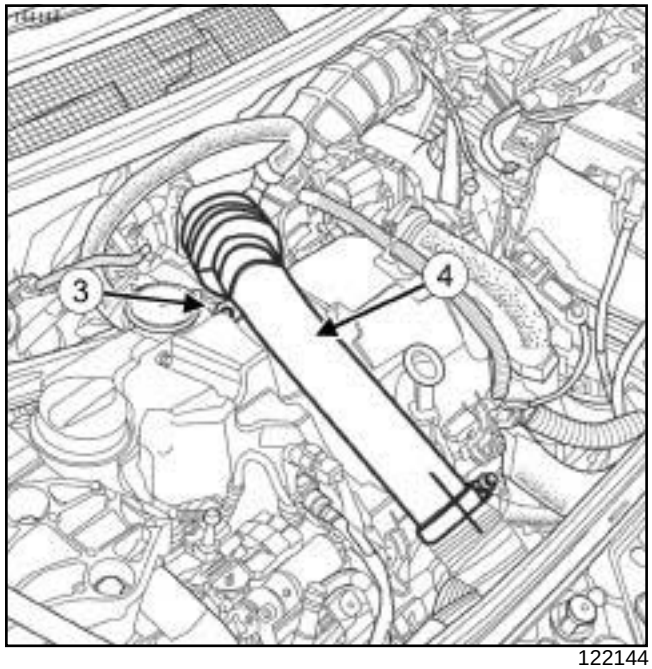

122144

❑ Remove the bolt (**3**) on the intercooler air inlet pipe.

❑ Move aside the intercooler air inlet pipe (**4**) .

K9K

II - OPERATION FOR REMOVAL OF PART CONCERNED

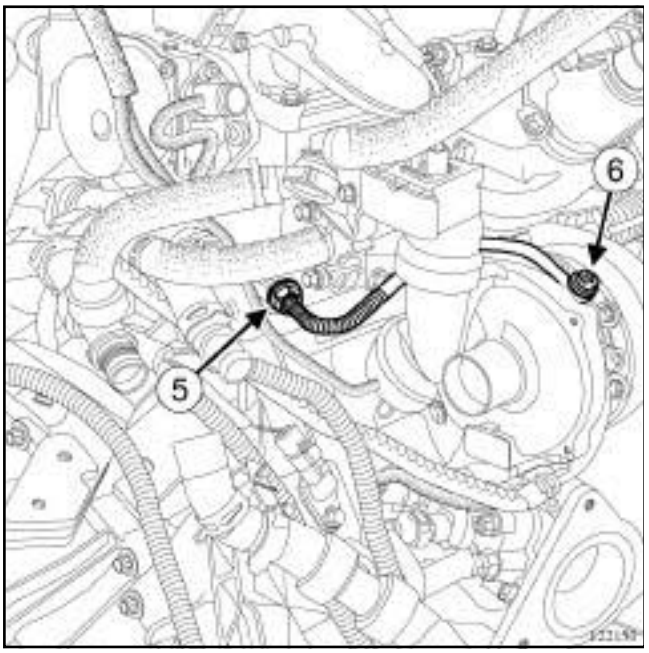

122150

❑ Undo the turbocharger oil supply pipe nut (**5**) from the cylinder head using the **(Mot. 1746)**.

❑ Remove:

- the turbocharger oil supply pipe hollow bolt (**6**) ,
- the turbocharger oil supply pipe.

REFITTING THE TURBOCHARGER OIL SUPPLY PIPE

REFITTING PREPARATION OPERATION

❑ **parts always to be replaced: turbocharger oil supply pipe (10,09,03,01)**

parts always to be replaced: Turbocharger oil supply pipe bolt (10,09,03,04)

I - REFITTING OPERATION FOR PART CONCERNED

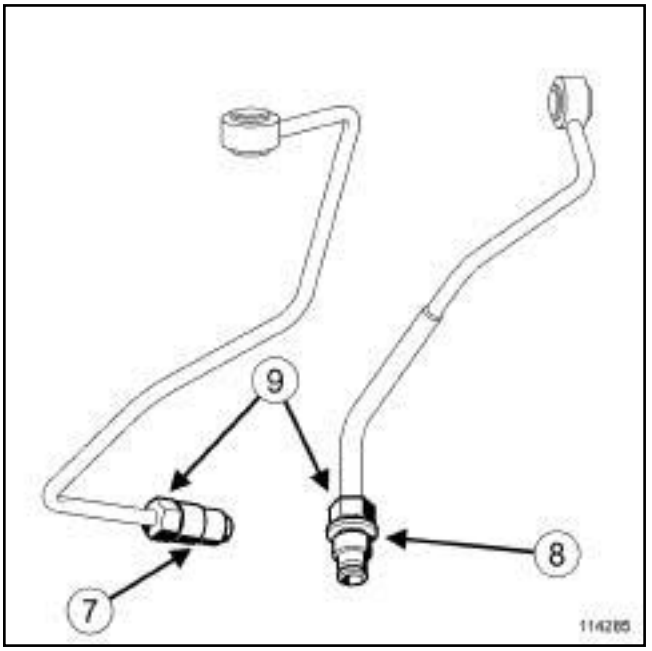

114285

❑

> Note:
>
> These two turbocharger oil supply pipes may be used on the same engine. The tightening torque of the end pieces (**9**) on the cylinder head is different, depending on the following:
>
> - if the end piece is shouldered (**8**) , in this case there will be no need to place the high-resistance bolt locking product on the end piece thread,
> - if the end piece is not shouldered (**7**) , it is essential to apply high-strength threadlock to the end piece threading.

❑ Refit a new turbocharger oil supply pipe.

❑ Fit without tightening:

- the turbocharger oil supply pipe nut on the cylinder head,
- the turbocharger oil supply pipe hollow bolt.

❑ Tighten to torque:

- the **turbocharger oil supply pipe hollow bolt (turbocharger end) (torx head bolt 18 N.m or bolt with head type H 14 N.m)**,
- the **turbocharger oil supply pipe nut (cylinder head side)collar nut 35 N.m or non-collar nut (23 N.m)** using tool **(Mot. 1746)**.

K9K

II - FINAL OPERATION

❑ Refit:

- the intercooler air inlet pipe,
- the bolt on the intercooler air inlet pipe,
- the air outlet pipe of the air filter unit.

❑ Torque tighten the **air filter box air outlet pipe clips (5.5 Nm)**.

❑ Connect the oil vapour rebreathing pipe on the rocker cover side.

❑ Refit:

- the battery tray (see **Battery tray: Removal - Refitting**) (80A, Battery),
- the battery (see **Battery: Removal - Refitting**) (80A, Battery),
- the engine cover.

REMOVING THE TURBOCHARGER OIL RETURN PIPE

I - REMOVAL PREPARATION OPERATION

❑ Position the vehicle on a two-post lift (see **Vehicle: Towing and lifting**) (02A, Lifting equipment).

❑ Disconnect the battery (see **Battery: Removal - Refitting**) (80A, Battery).

❑ Remove:

- the engine cover,
- the scuttle panel grille (see **Scuttle panel grille: Removal - Refitting**) (56A, Exterior equipment),
- the engine undertray bolts,
- the engine undertray,
- the lower engine tie-bar (see **19D**, **Engine mounting**, **Lower engine tie-bar: Removal - Refitting**, page **19D-36**) .

K9K, and 722 or 728 or 729 or 732

❑ Remove the catalytic converter (see **19B**, **Exhaust**, **Catalytic converter: Removal - Refitting**, page **19B-46**) .

K9K, and 734

❑ Remove the catalytic pre-converter (see **19B**, **Exhaust**, **Catalytic pre-converter: Removal - Refitting**, page **19B-29**) .

II - OPERATION FOR REMOVAL OF PART CONCERNED

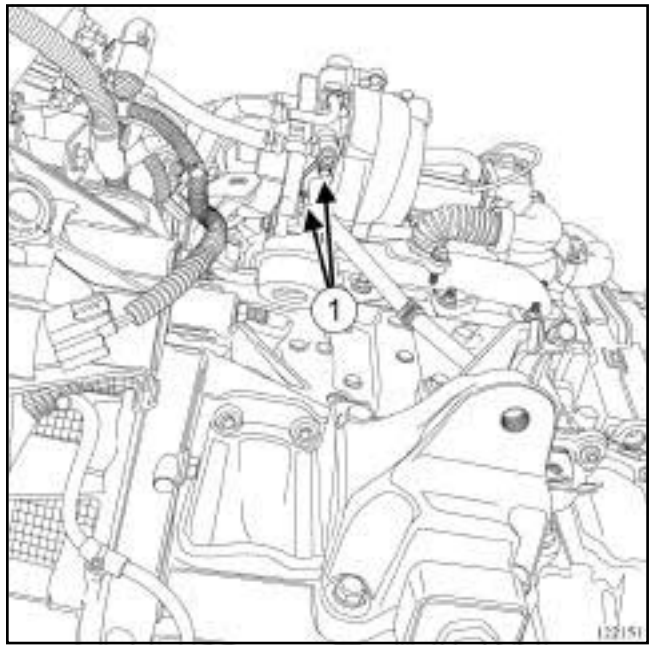

122151

❑ Remove:

- the bolts (**1**) from the turbocharger oil return pipe,
- the turbocharger oil return pipe.

REFITTING THE TURBOCHARGER OIL RETURN PIPE

I - REFITTING PREPARATION OPERATION

❑ **parts always to be replaced: turbocharger oil pipe seal (10,09,03,05)**

❑ Oil the turbocharger oil return pipe O-ring.

II - REFITTING OPERATION FOR PART CONCERNED

❑ Refit new seals on the new turbocharger oil return pipe.

❑ Fit the turbocharger oil return pipe, first positioning it in the cylinder block.

K9K

- Torque tighten the **turbocharger oil return pipe bolts (12 N.m)**.

III - FINAL OPERATION

K9K, and 722 or 728 or 729 or 732

- Refit the catalytic converter (see **19B**, **Exhaust**, **Catalytic converter: Removal - Refitting**, page **19B-46**) .

K9K, and 734

- Refit the catalytic pre-converter (see **19B**, **Exhaust**, **Catalytic pre-converter: Removal - Refitting**, page **19B-29**) .

- Refit:
  - the lower engine tie-bar (see **19D**, **Engine mounting**, **Lower engine tie-bar: Removal - Refitting**, page **19D-36**) ,
  - the engine undertray,
  - the scuttle panel grille (see **Scuttle panel grille: Removal - Refitting**) (56A, Exterior equipment),
  - the engine cover.
- Connect the battery (see **Battery : Removal - Refitting**) (80A, Battery).

K9K

Essential special tooling	
Mot. 1746	Offset spanner for tightening high pressure pump pipes.

Tightening torques ▽	
turbocharger oil supply pipe hollow bolt (turbocharger end)	**torx head bolt 18 N.m or bolt with head type H 14 N.m**
turbocharger oil supply pipe nut (cylinder head side)collar nut 35 N.m or non-collar nut	**23 N.m**
air filter box air outlet pipe clips	**5.5 N.m**
turbocharger oil return pipe bolts	**12 N.m**

IMPORTANT
Wear latex gloves during the operation.

IMPORTANT
Wear protective gloves during the operation.

WARNING
Prepare for the flow of fluid, and protect the surrounding components.

Note:
This procedure deals with removing and refitting the turbocharger oil return pipe and the turbocharger oil supply pipe.

REMOVING THE TURBOCHARGER OIL SUPPLY PIPE

I - REMOVAL PREPARATION OPERATION

❑ Position the vehicle on a two-post lift (see **Vehicle: Towing and lifting**) (02A, Lifting equipment).

❑ Remove:

- the engine cover,
- the battery (see **Battery : Removal - Refitting**) (80A, Battery),
- the battery tray (see **Battery tray: Removal - Refitting**) (80A, Battery).

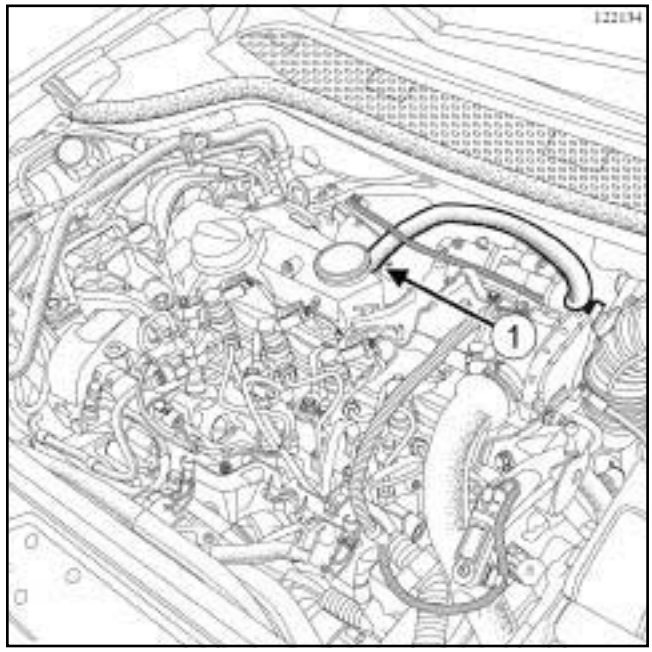

122134

❑ Disconnect the oil vapour rebreathing pipe (**1**) on the rocker cover side.

K9K

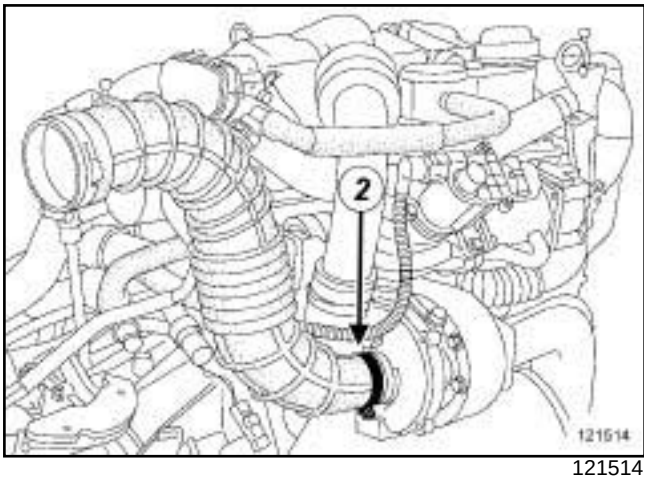

121514

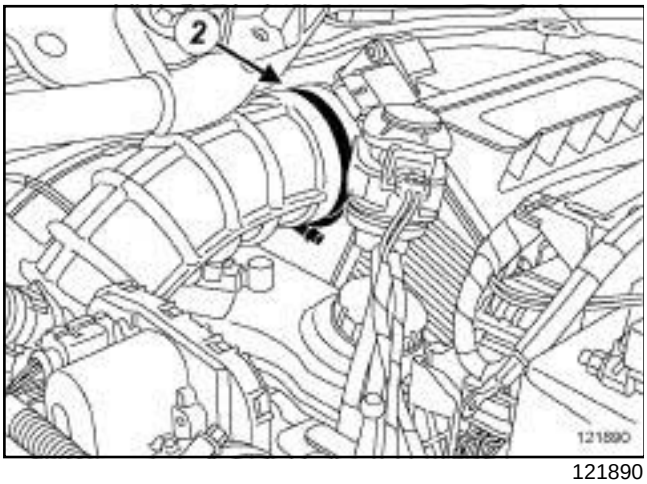

121890

❑ Undo the clips (**2**) for the air filter unit air outlet pipe.

❑ Disconnect the air outlet pipe from the air filter unit.

❑ Remove the air outlet pipe from the air filter box.

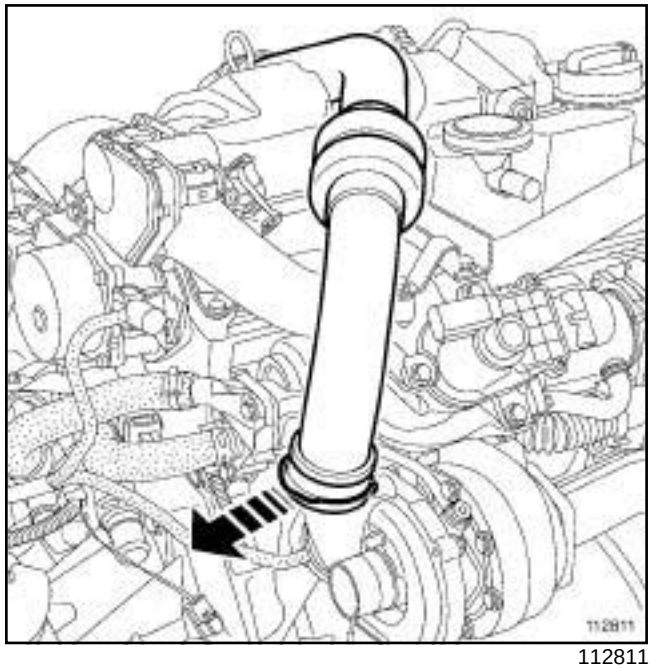

112811

❑ Pull the clip from the intercooler air inlet pipe.

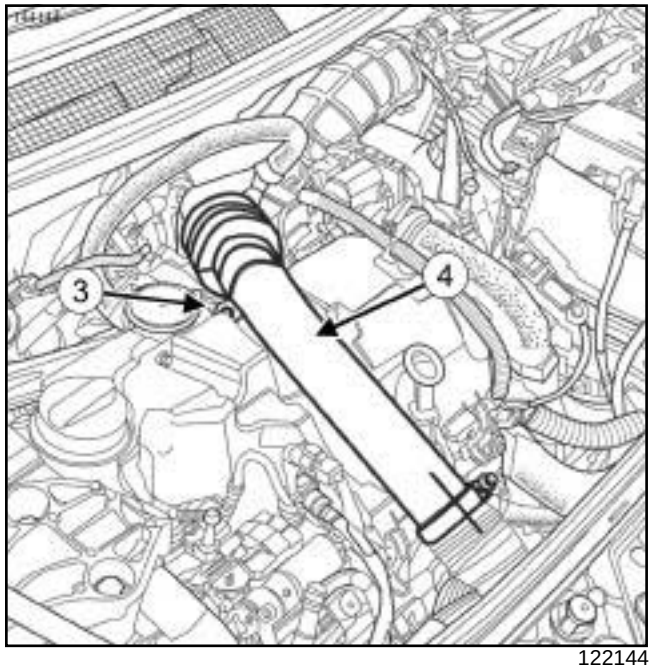

122144

❑ Remove the bolt (**3**) on the intercooler air inlet pipe.

❑ Move aside the intercooler air inlet pipe (**4**) .

K9K

II - OPERATION FOR REMOVAL OF PART CONCERNED

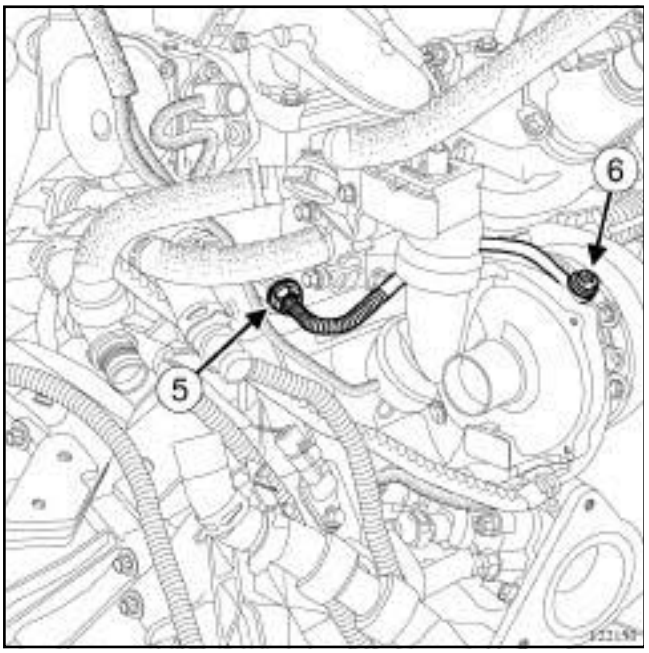

122150

❑ Undo the turbocharger oil supply pipe nut (**5**) from the cylinder head using the **(Mot. 1746)**.

❑ Remove:

- the turbocharger oil supply pipe hollow bolt (**6**) ,
- the turbocharger oil supply pipe.

REFITTING THE TURBOCHARGER OIL SUPPLY PIPE

REFITTING PREPARATION OPERATION

❑ **parts always to be replaced: turbocharger oil supply pipe (10,09,03,01)**

parts always to be replaced: Turbocharger oil supply pipe bolt (10,09,03,04)

I - REFITTING OPERATION FOR PART CONCERNED

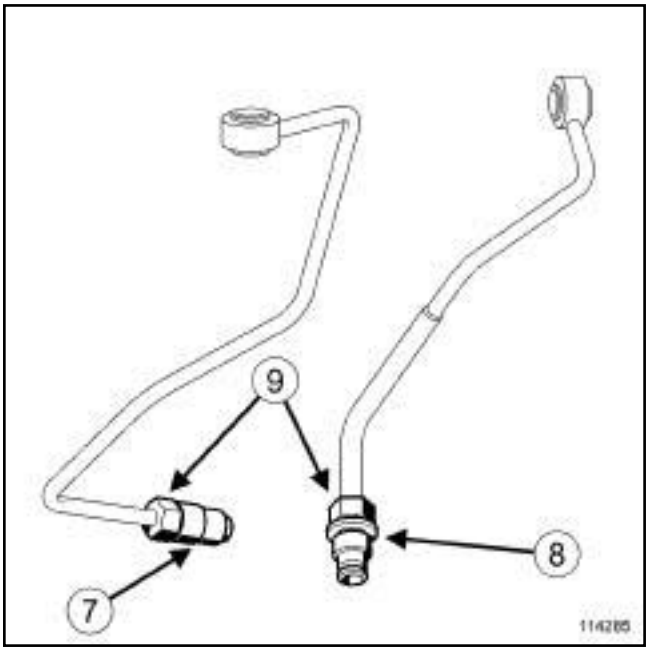

114285

❑

> Note:
>
> These two turbocharger oil supply pipes may be used on the same engine. The tightening torque of the end pieces (**9**) on the cylinder head is different, depending on the following:
>
> - if the end piece is shouldered (**8**) , in this case there will be no need to place the high-resistance bolt locking product on the end piece thread,
> - if the end piece is not shouldered (**7**) , it is essential to apply high-strength threadlock to the end piece threading.

❑ Refit a new turbocharger oil supply pipe.

❑ Fit without tightening:

- the turbocharger oil supply pipe nut on the cylinder head,
- the turbocharger oil supply pipe hollow bolt.

❑ Torque tighten:

- the **turbocharger oil supply pipe hollow bolt (turbocharger end) (torx head bolt 18 N.m or bolt with head type H 14 N.m)**,
- the **turbocharger oil supply pipe nut (cylinder head side)collar nut 35 N.m or non-collar nut (23 N.m)** using tool **(Mot. 1746)**.

K9K

II - FINAL OPERATION

❑ Refit:

- the intercooler air inlet pipe,
- the bolt on the intercooler air inlet pipe,
- the air outlet pipe of the air filter unit.

❑ Torque tighten the **air filter box air outlet pipe clips (5.5 N.m)**.

❑ Connect the oil vapour rebreathing pipe on the rocker cover side.

❑ Refit:

- the battery tray (see **Battery tray: Removal - Refitting**) (80A, Battery),
- the battery (see **Battery: Removal - Refitting**) (80A, Battery),
- the engine cover.

REMOVING THE TURBOCHARGER OIL RETURN PIPE

I - REMOVAL PREPARATION OPERATION

❑ Position the vehicle on a two-post lift (see **Vehicle: Towing and lifting**) (02A, Lifting equipment).

❑ Disconnect the battery (see **Battery: Removal - Refitting**) (80A, Battery).

❑ Remove:

- the engine cover,
- the scuttle panel grille (see **Scuttle panel grille: Removal - Refitting**) (56A, Exterior equipment),
- the engine undertray bolts,
- the engine undertray,
- the lower engine tie-bar (see **19D**, **Engine mounting**, **Lower engine tie-bar: Removal - Refitting**, page **19D-36**) .

K9K, and 722 or 728 or 729 or 732

❑ Remove the catalytic converter (see **19B**, **Exhaust**, **Catalytic converter: Removal - Refitting**, page **19B-46**) .

K9K, and 734

❑ Remove the catalytic pre-converter (see **19B**, **Exhaust**, **Catalytic pre-converter: Removal - Refitting**, page **19B-29**) .

II - OPERATION FOR REMOVAL OF PART CONCERNED

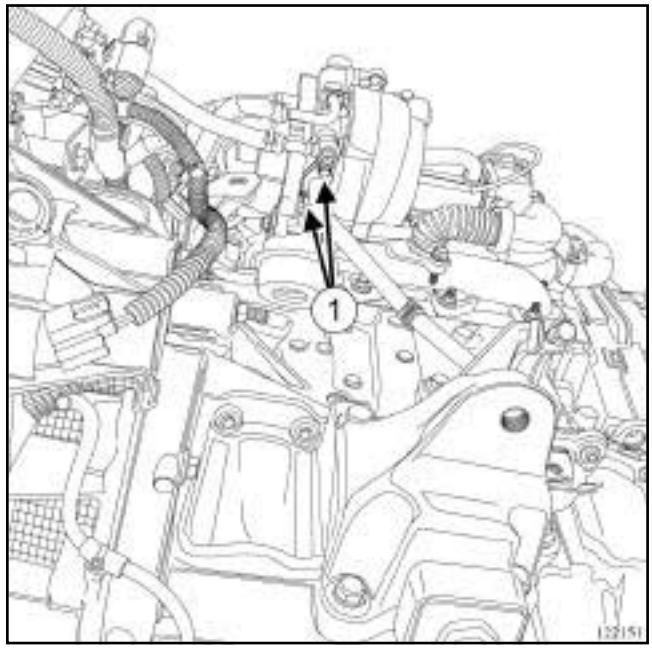

122151

❑ Remove:

- the bolts (**1**) from the turbocharger oil return pipe,
- the turbocharger oil return pipe.

REFITTING THE TURBOCHARGER OIL RETURN PIPE

I - REFITTING PREPARATION OPERATION

❑ **parts always to be replaced: turbocharger oil pipe seal (10,09,03,05)**

❑ Oil the turbocharger oil return pipe O-ring.

II - REFITTING OPERATION FOR PART CONCERNED

❑ Refit new seals on the new turbocharger oil return pipe.

❑ Fit the turbocharger oil return pipe, first positioning it in the cylinder block.

K9K

- Torque tighten the **turbocharger oil return pipe bolts (12 N.m)**.

III - FINAL OPERATION

K9K, and 722 or 728 or 729 or 732

- Refit the catalytic converter (see **19B**, **Exhaust**, **Catalytic converter: Removal - Refitting**, page **19B-46**) .

K9K, and 734

- Refit the catalytic pre-converter (see **19B**, **Exhaust**, **Catalytic pre-converter: Removal - Refitting**, page **19B-29**) .

- Refit:
  - the lower engine tie-bar (see **19D**, **Engine mounting**, **Lower engine tie-bar: Removal - Refitting**, page **19D-36**) ,
  - the engine undertray,
  - the scuttle panel grille (see **Scuttle panel grille: Removal - Refitting**) (56A, Exterior equipment),
  - the engine cover.
- Connect the battery (see **Battery : Removal - Refitting**) (80A, Battery).

K9K

Essential special tooling	
Mot. 1746	Offset spanner for tightening high pressure pump pipes.

Tightening torques ▽	
turbocharger oil supply pipe hollow bolt (turbocharger end)	**torx head bolt 18 N.m or bolt with head type H 14 N.m**
turbocharger oil supply pipe nut (cylinder head side)collar nut 35 N.m or non-collar nut	**23 N.m**
air filter box air outlet pipe clips	**5.5 N.m**
turbocharger oil return pipe bolts	**12 N.m**

IMPORTANT
Wear latex gloves during the operation.

IMPORTANT
Wear protective gloves during the operation.

WARNING
Prepare for the flow of fluid, and protect the surrounding components.

Note:
This procedure deals with removing and refitting the turbocharger oil return pipe and the turbocharger oil supply pipe.

REMOVING THE TURBOCHARGER OIL SUPPLY PIPE

I - REMOVAL PREPARATION OPERATION

❑ Position the vehicle on a two-post lift (see **Vehicle: Towing and lifting**) (02A, Lifting equipment).

❑ Remove:

- the engine cover,
- the battery (see **Battery : Removal - Refitting**) (80A, Battery),
- the battery tray (see **Battery tray: Removal - Refitting**) (80A, Battery).

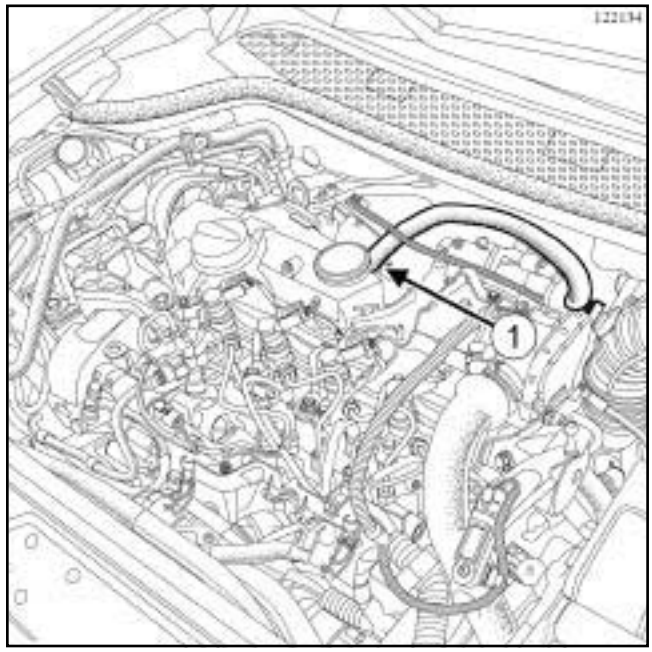

122134

❑ Disconnect the oil vapour rebreathing pipe (**1**) on the rocker cover side.

K9K

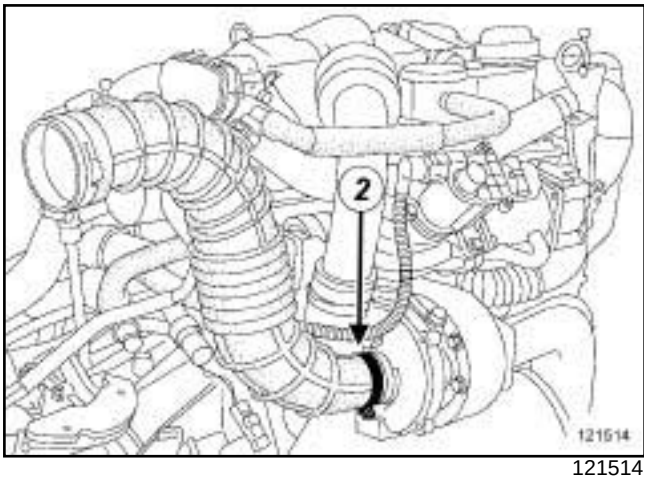

121514

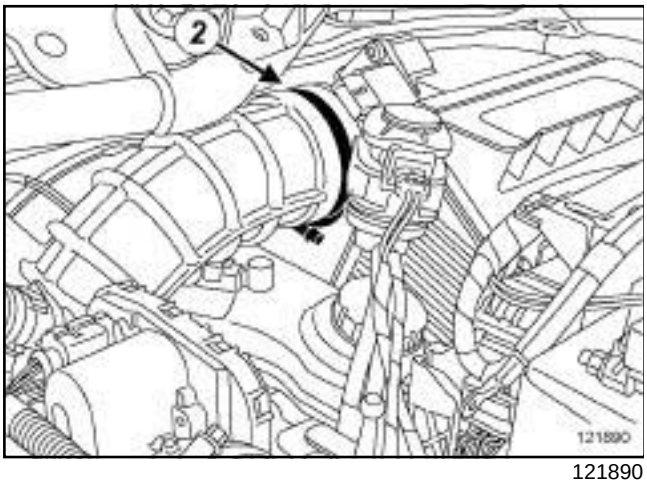

121890

❑ Undo the clips (**2**) for the air filter unit air outlet pipe.

❑ Disconnect the air outlet pipe from the air filter unit.

❑ Remove the air outlet pipe from the air filter box.

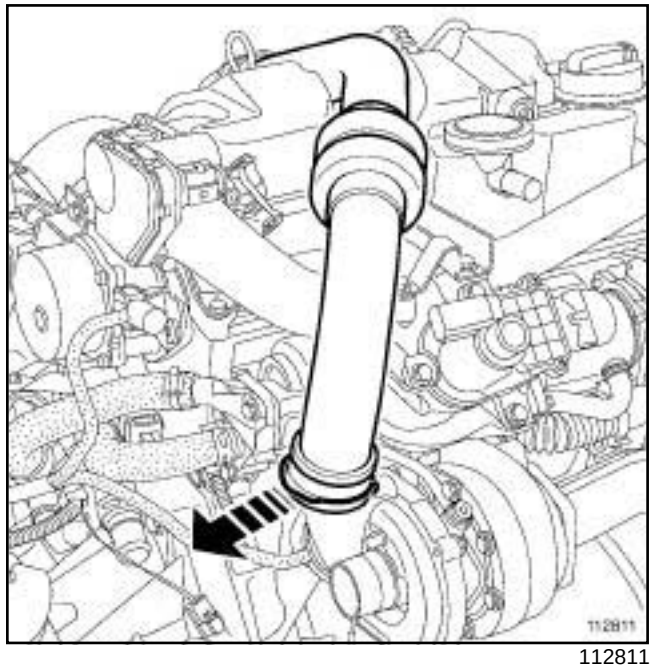

112811

❑ Pull the clip from the intercooler air inlet pipe.

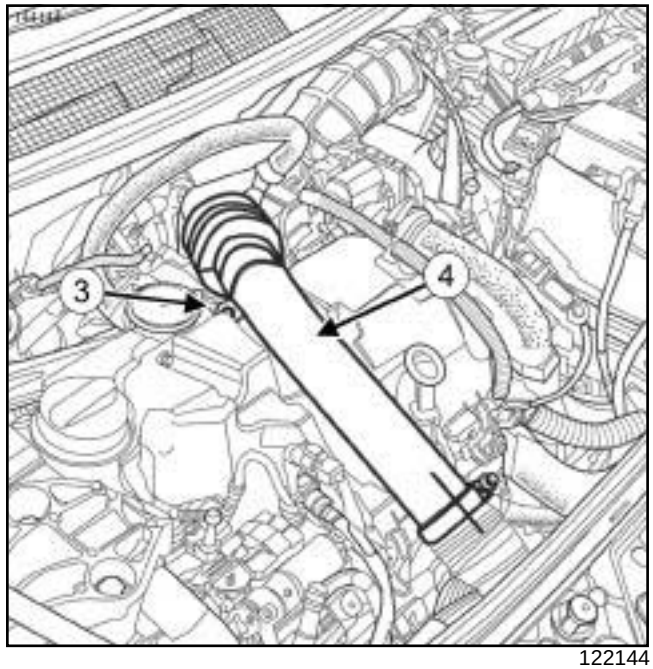

122144

❑ Remove the bolt (**3**) on the intercooler air inlet pipe.

❑ Move aside the intercooler air inlet pipe (**4**) .

K9K

II - OPERATION FOR REMOVAL OF PART CONCERNED

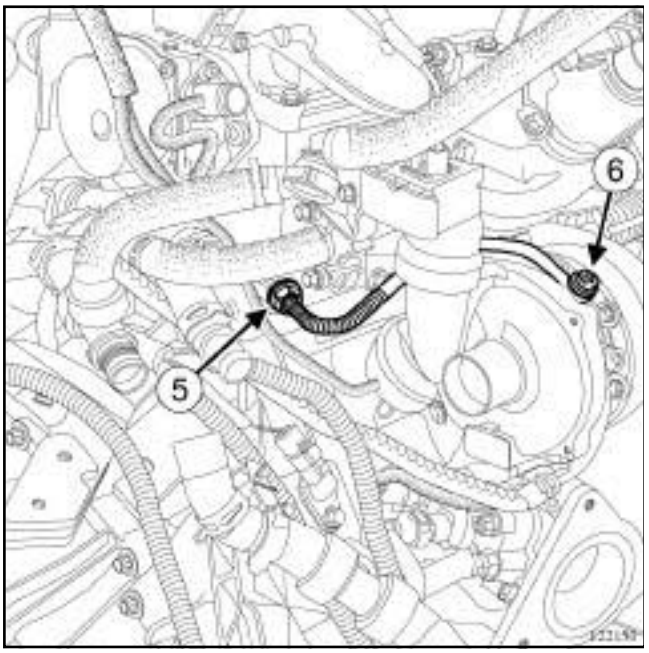

122150

❑ Undo the turbocharger oil supply pipe nut (**5**) from the cylinder head using the **(Mot. 1746)**.

❑ Remove:

- the turbocharger oil supply pipe hollow bolt (**6**) ,
- the turbocharger oil supply pipe.

REFITTING THE TURBOCHARGER OIL SUPPLY PIPE

REFITTING PREPARATION OPERATION

❑ **parts always to be replaced: turbocharger oil supply pipe (10,09,03,01)**

parts always to be replaced: Turbocharger oil supply pipe bolt (10,09,03,04)

I - REFITTING OPERATION FOR PART CONCERNED

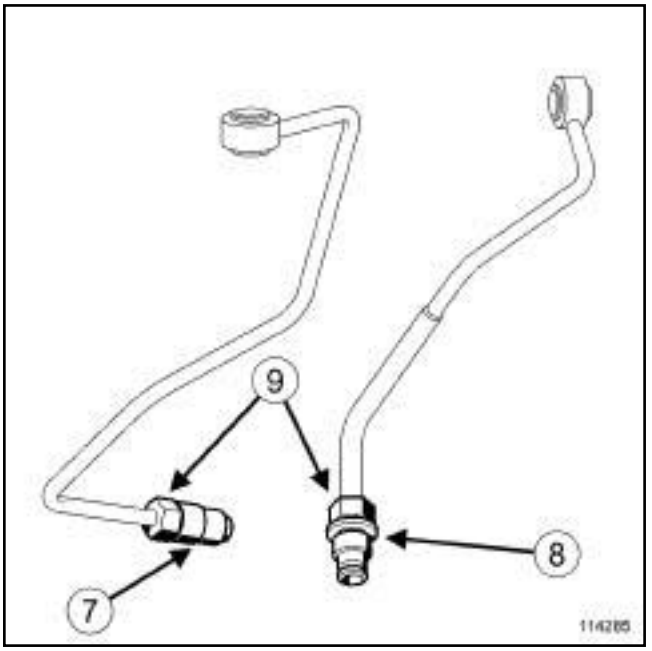

114285

❑

> Note:
>
> These two turbocharger oil supply pipes may be used on the same engine. The tightening torque of the end pieces (**9**) on the cylinder head is different, depending on the following:
>
> - if the end piece is shouldered (**8**) , in this case there will be no need to place the high-resistance bolt locking product on the end piece thread,
> - if the end piece is not shouldered (**7**) , it is essential to apply high-strength threadlock to the end piece threading.

❑ Refit a new turbocharger oil supply pipe.

❑ Fit without tightening:

- the turbocharger oil supply pipe nut on the cylinder head,
- the turbocharger oil supply pipe hollow bolt.

❑ Torque tighten:

- the **turbocharger oil supply pipe hollow bolt (turbocharger end) (torx head bolt 18 N.m or bolt with head type H 14 N.m)**,
- the **turbocharger oil supply pipe nut (cylinder head side)collar nut 35 N.m or non-collar nut (23 N.m)** using tool **(Mot. 1746)**.

K9K

II - FINAL OPERATION

❑ Refit:

- the intercooler air inlet pipe,
- the bolt on the intercooler air inlet pipe,
- the air outlet pipe of the air filter unit.

❑ Torque tighten the **air filter box air outlet pipe clips (5.5 N.m)**.

❑ Connect the oil vapour rebreathing pipe on the rocker cover side.

❑ Refit:

- the battery tray (see **Battery tray: Removal - Refitting**) (80A, Battery),
- the battery (see **Battery: Removal - Refitting**) (80A, Battery),
- the engine cover.

REMOVING THE TURBOCHARGER OIL RETURN PIPE

I - REMOVAL PREPARATION OPERATION

❑ Position the vehicle on a two-post lift (see **Vehicle: Towing and lifting**) (02A, Lifting equipment).

❑ Disconnect the battery (see **Battery: Removal - Refitting**) (80A, Battery).

❑ Remove:

- the engine cover,
- the scuttle panel grille (see **Scuttle panel grille: Removal - Refitting**) (56A, Exterior equipment),
- the engine undertray bolts,
- the engine undertray,
- the lower engine tie-bar (see **19D**, **Engine mounting**, **Lower engine tie-bar: Removal - Refitting**, page **19D-36**) .

K9K, and 722 or 728 or 729 or 732

❑ Remove the catalytic converter (see **19B**, **Exhaust**, **Catalytic converter: Removal - Refitting**, page **19B-46**) .

K9K, and 734

❑ Remove the catalytic pre-converter (see **19B**, **Exhaust**, **Catalytic pre-converter: Removal - Refitting**, page **19B-29**) .

II - OPERATION FOR REMOVAL OF PART CONCERNED

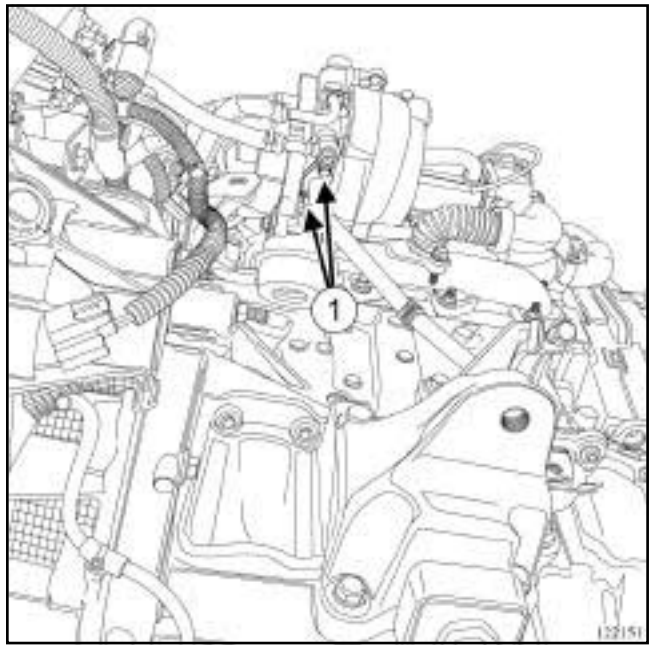

122151

❑ Remove:

- the bolts (**1**) from the turbocharger oil return pipe,
- the turbocharger oil return pipe.

REFITTING THE TURBOCHARGER OIL RETURN PIPE

I - REFITTING PREPARATION OPERATION

❑ **parts always to be replaced: turbocharger oil pipe seal (10,09,03,05)**

❑ Oil the turbocharger oil return pipe O-ring.

II - REFITTING OPERATION FOR PART CONCERNED

❑ Refit new seals on the new turbocharger oil return pipe.

❑ Fit the turbocharger oil return pipe, first positioning it in the cylinder block.

K9K

- Torque tighten the **turbocharger oil return pipe bolts (12 N.m)**.

III - FINAL OPERATION

K9K, and 722 or 728 or 729 or 732

- Refit the catalytic converter (see **19B**, **Exhaust**, **Catalytic converter: Removal - Refitting**, page **19B-46**) .

K9K, and 734

- Refit the catalytic pre-converter (see **19B**, **Exhaust**, **Catalytic pre-converter: Removal - Refitting**, page **19B-29**) .

- Refit:
  - the lower engine tie-bar (see **19D**, **Engine mounting**, **Lower engine tie-bar: Removal - Refitting**, page **19D-36**) ,
  - the engine undertray,
  - the scuttle panel grille (see **Scuttle panel grille: Removal - Refitting**) (56A, Exterior equipment),
  - the engine cover.
- Connect the battery (see **Battery : Removal - Refitting**) (80A, Battery).

F4R or F9Q or K9K or M9R

Essential special tooling	
Car. 1363	Set of trim removal levers.

Tightening torques ▽	
intercooler downstream duct clip on the intercooler	**5.5 Nm**
intercooler upstream duct clip	**5.5 Nm**
clip on the intercooler downstream duct on the damper valve	**5.5 Nm**
front end panel upper bolts	**21 Nm**
front end panel lower bolts	**44 Nm**

Procedure for removing the air inlet duct on the intercooler:

- detach the hose using the **(Car. 1363)**,
- do not use a degreaser, brake cleaning product or any other product,
- clean the bearing face on the intercooler and on the hose with a dry, lint-free cloth,
- replace the clip in the same position if the hose is not replaced,
- Always replace the clip with a new one,
- always replace the hose and/or the air-air exchanger if they have been damaged.

There is a danger of leakage and dislocation if this procedure is not followed.

REMOVAL

I - REMOVAL PREPARATION OPERATION

❑ Position the vehicle on a two-post lift (see **Vehicle: Towing and lifting**) (MR 364, 02A, Lifting equipment).

❑ Disconnect the battery (see **Battery: Removal - Refitting**) (MR 364, 80A, Battery).

❑ Remove:

- the engine covers,
- the engine undertray bolts,
- the engine undertray,
- the front bumper (see **Front bumper: Removal - Refitting**) (MR 365, 55A, Exterior protection).

F9Q, and 803 or 804 – M9R, and 700 or 724

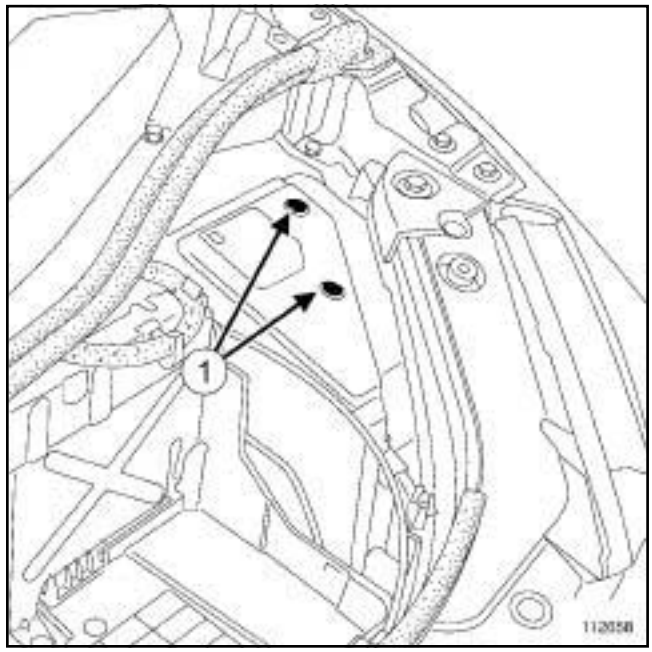

112658

❑ Remove the protection and switching unit cover bolts (**1**) .

F4R or F9Q or K9K or M9R

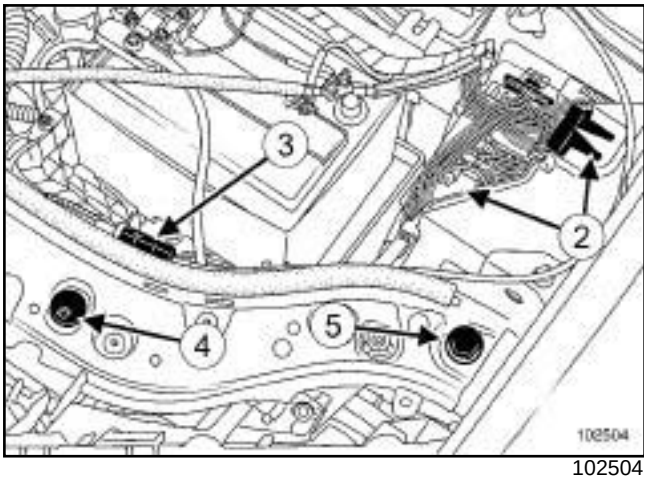

102504

- ❑ Remove the Protection and Switching Unit cover.
- ❑ Disconnect the Protection and Switching Unit connectors (**2**) .
- ❑ Unclip the bonnet opening cable (**3**) .
- ❑ Remove:
  - the front end panel clips (**4**) ,
  - the upper bolts (**5**) from the front end panel,
  - the front end panel lower bolts.
- ❑ Disconnect the screen washer pipes.

M9R, and 700 or 724

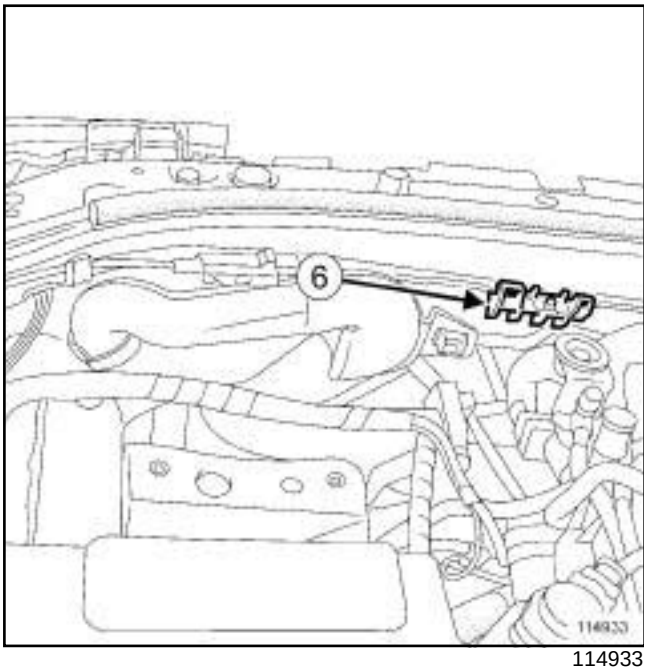

114933

- ❑ Unclip the air inlet scoop (**6**) .

II - OPERATION FOR REMOVAL OF PART CONCERNED

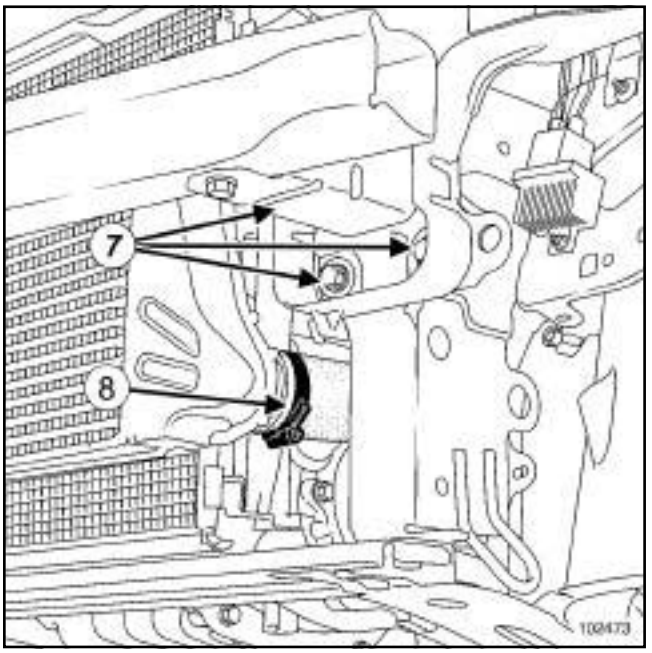

102473

- ❑ Remove:
  - the front end panel lower bolts (**7**) ,
  - the front end panel.
- ❑ Undo the intercooler upstream hose clip (**8**) .
- ❑ Disconnect the hose upstream of the intercooler.

F4R or F9Q or K9K or M9R

M9R, and 700 or 724

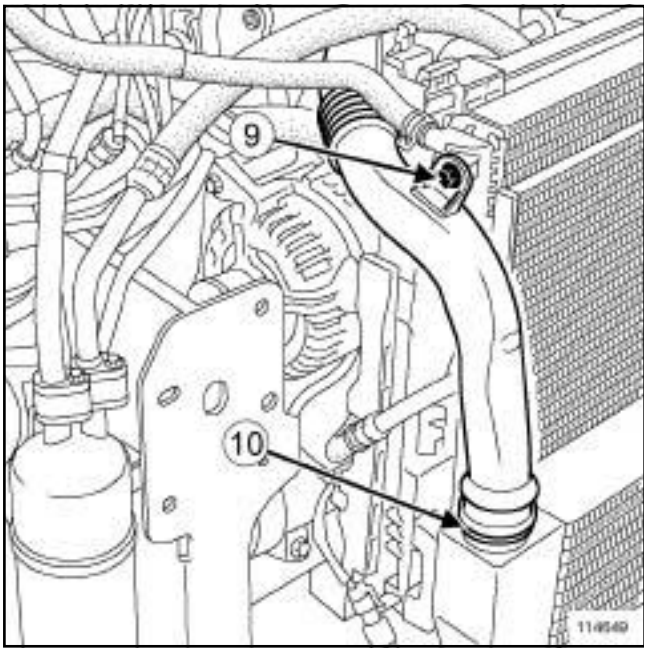

114649

❑ Remove the bolt (**9**) from the intercooler downstream duct on the cooling radiator.

❑ Undo:

- the clip (**10**) mounting the intercooler downstream duct on the intercooler,
- the clip securing the intercooler downstream duct on the damper valve.

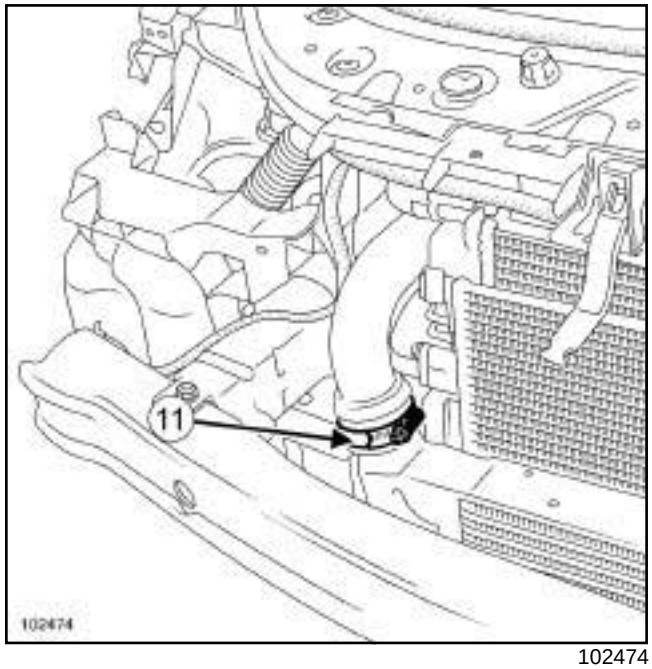

102474

❑ Undo the clip from the intercooler downstream duct (**11**) on the intercooler.

❑ Remove the intercooler downstream duct from the intercooler.

❑ Remove the intercooler.

REFITTING

I - REFITTING PREPARATIONS OPERATION

❑

Note:

If there has been a fault in the turbocharger, check that the intercooler is not full of oil.

In this is the case:

- remove the intercooler.
- rinse the intercooler with a cleaning agent,
- allow the intercooler to drain.

F4R or F9Q or K9K or M9R

II - REFITTING OPERATION FOR PART CONCERNED

❑ Connect:

- the intercooler upstream hose,
- the intercooler downstream duct onto the intercooler.

❑ Torque tighten:

- the **intercooler downstream duct clip on the intercooler (5.5 Nm)**,
- the **intercooler upstream duct clip (5.5 Nm)**.

M9R, and 700 or 724

❑ Refit the intercooler downstream duct bolt on the cooling radiator.

❑ Torque tighten the **clip on the intercooler downstream duct on the damper valve (5.5 Nm)**.

III - FINAL OPERATION.

❑ Refit:

- the front end panel,
- the front end panel bolts.

❑ Torque tighten:

- the **front end panel upper bolts (21 Nm)**,
- the **front end panel lower bolts (44 Nm)**.

M9R, and 700 or 724

❑ Clip on the air inlet scoop.

❑ Clip on the bonnet opening cable.

❑ Connect:

- the screen washer pipes,
- the Protection and Switching Unit connectors.

❑ Refit the Protection and Switching Unit cover.

F9Q, and 803 or 804 – M9R, and 700 or 724

❑ Refit the protection and switching unit cover bolts.

❑ Refit:

- the front end panel clips,
- the front bumper (see **Front bumper: Removal - Refitting**) (MR 365, 55A, Exterior protection),
- the engine undertray,
- the engine undertray bolts,
- the engine covers.

❑ Connect the battery (see **Battery : Removal - Refitting**) (MR 364, 80A, Battery).

❑ Adjust the headlights (see **Halogen headlight: Adjustment**) (MR 364, 80B, Headlights) or (see **Xenon headlights: Adjustment**) (MR 364, 80C, Xenon bulbs).

B84 or C84 or G84 or S84, and F4R, and 770 or 771 or 776 – B84 or C84 or G84 or S84, and K4J, and 730 or 732 – B84 or C84 or G84 or S84, and K4M, and 760 or 761

Operating diagram of the petrol supply circuit

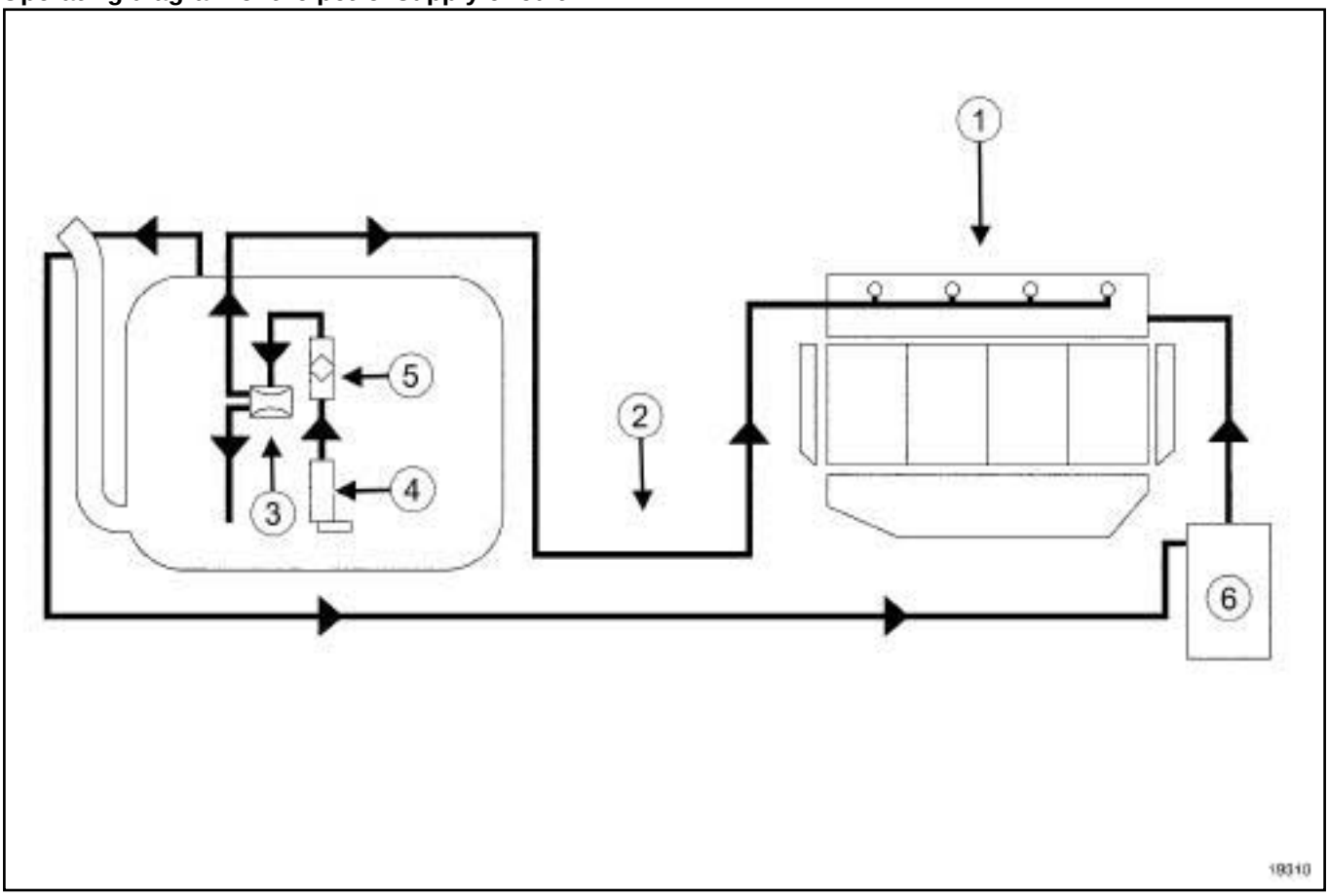

19310

The fuel system does not have a return.

The fuel pressure does not vary with engine load.

The circuit comprises:

- a rail (**1**) without a return pipe union and without a supply pressure regulator,
- a single pipe (**2**) coming from the tank,
- a « pump - sender - fuel filter » supply assembly fitted with a pressure regulator (**3**) , pump (**4**) and fuel filter (**5**) (all located in the reservoir),
- a fuel vapour recirculation tank (**6**) .

C84 or G84 or S84, and K9K, and 722 or 724 or 728 or 729

Operating diagram of the diesel fuel supply circuit

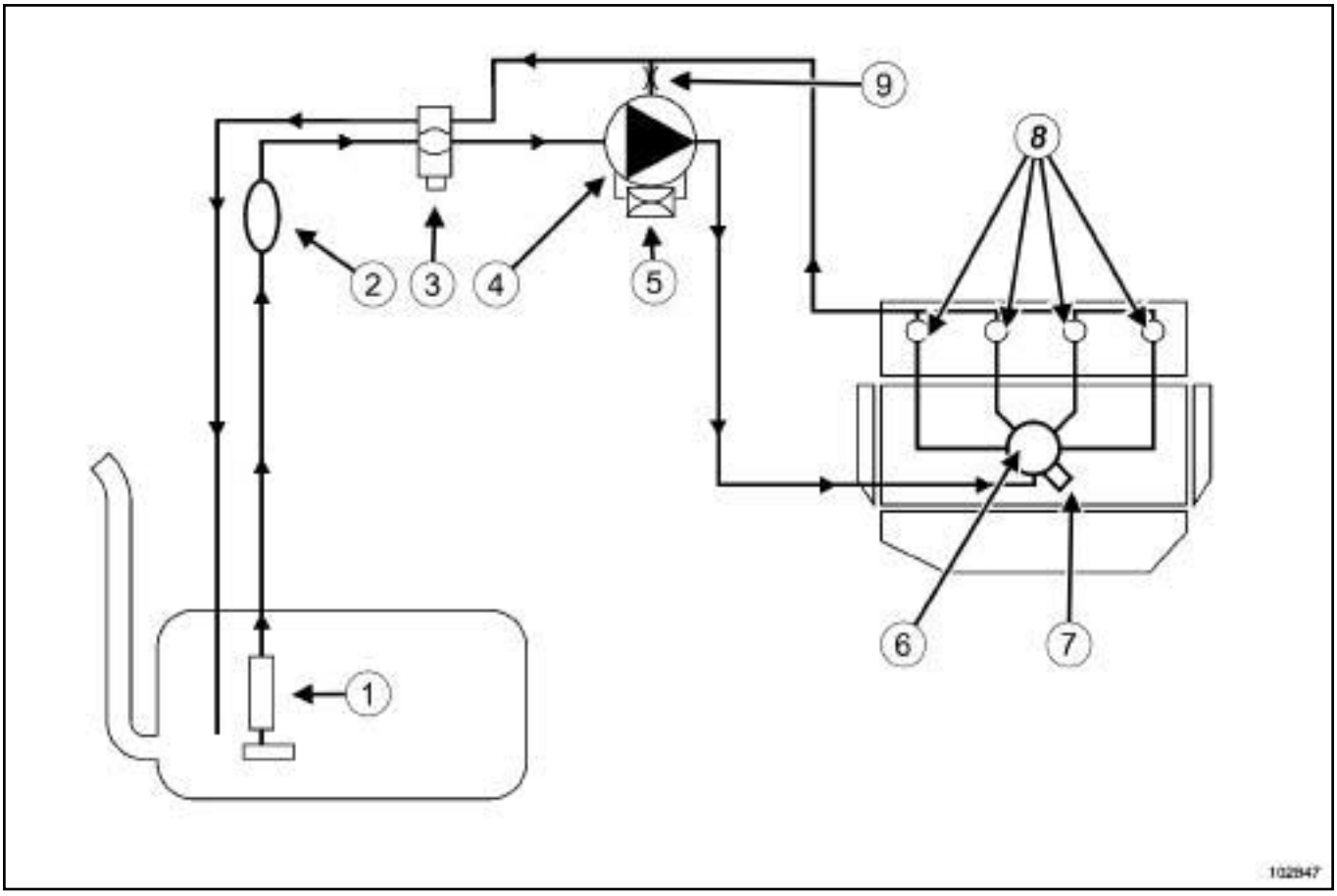

102847

The circuit comprises:

- a sender (**1**) ,
- a manual priming pump (**2**) ,
- a fuel filter (**3**) which may be fitted with a water detection sensor,
- a high pressure pump (**4**) with a built-in mechanical low pressure pump (transfer pump),
- a fuel flow actuator (**5**) ,
- an injection rail (**6**) fitted with a diesel fuel pressure sensor (**7**) ,
- four solenoid injectors (**8**) fitted with discharge valves,
- a Venturi tube (**9**) ,
- various sensors,
- an injection computer.

IMPORTANT
Loosening a high pressure pipe union when the engine is running is strictly prohibited.

It is forbidden:

- to dismantle the interior of the pump or injectors. Only the flow actuator, the diesel fuel temperature sensor and the venturi can be replaced,
- to remove the pressure sensor from the fuel rail (because of circuit contamination problems). If the pressure sensor fails, the pressure sensor, the rail and the five high pressure pipes must be replaced.

B84 or C84 or G84 or S84, and M9R, and 700

Operating diagram of the diesel supply circuit

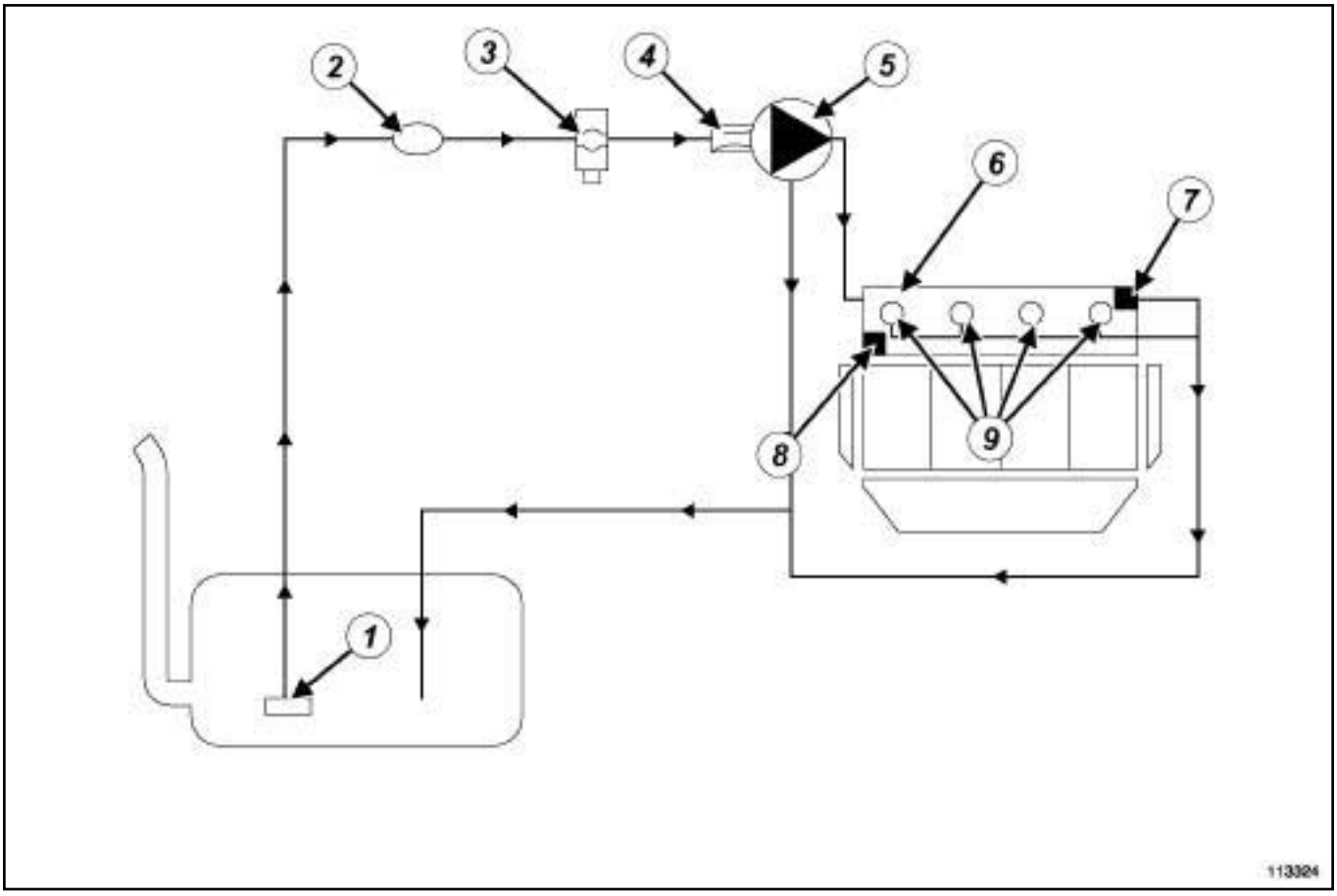

113324

The circuit comprises:

- a sender (**1**) ,
- a manual priming pump (**2**) ,
- a fuel filter (**3**) which may be fitted with a sensor for detecting water,
- a pressure regulator (**4**) mounted on the high-pressure pump,
- the high pressure pump (**5**) ,
- an injector rail (**6**) fitted with a pressure regulator (**7**) and a pressure sensor (**8**) ,
- four piezoelectric injectors (**9**) ,
- various sensors,
- an injection computer.

F9Q

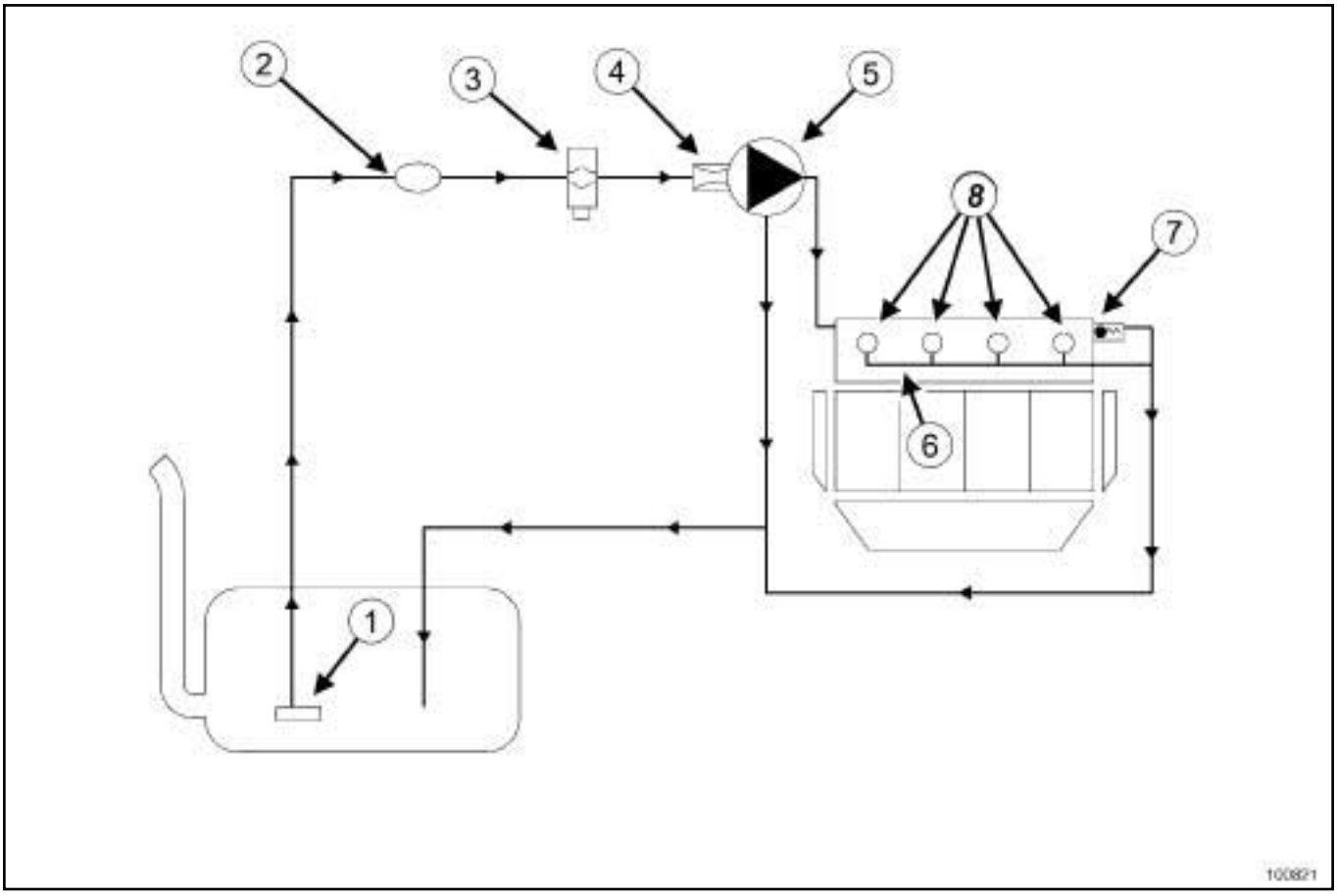

100821

The circuit comprises:

- a sender (**1**) ,
- a manual priming pump (**2**) ,
- a fuel filter (**3**) ,
- a pressure regulator (**4**) integrated in the high pressure pump,
- a high pressure pump (**5**) ,
- an injector rail (**6**) , fitted with a pressure sensor and a fuel pressure limiter (**7**) ,
- four injectors (**8**) .

B84 or C84 or G84 or S84, and F9Q, and 803 or 804

Essential equipment
refrigerant charging station

Tightening torques ▽	
evaporator-condenser connecting hose union bolt on the evaporator	**8 Nm**

The manual priming pump cannot be separated from the fuel supply pipe; to remove the manual priming pump, remove the « fuel supply and return pipes » assembly.

IMPORTANT
Wear gloves during this operation.

REMOVAL

I - REMOVAL PREPARATION OPERATION

❑ Position the vehicle on a two-post lift (see **Vehicle: Towing and lifting**) (MR 364, 02A, Lifting equipment).

❑ Disconnect the battery (see **Battery: Removal - Refitting**) (MR 364, 80A, Battery).

❑ Remove:

- the engine cover,
- the engine undertray,
- the front-right hand wheel (see **Wheel: Removal - Refitting**) (MR 364, 35A, Wheels and tyres),
- the front section of the front right-hand wheel arch liner (see **Front wheel arch liner: Removal - Refitting**) (MR 365, 55A, Exterior protection).

AIR CONDITIONING or CLIMATE CONTROL

❑ Drain the refrigerant circuit using the **refrigerant charging station**.

❑ Remove:

- the upper engine tie-bar.
- the front right-hand driveshaft (see **Front right-hand wheel driveshaft: Removal - Refitting**) (MR 364, 29A, Driveshaft),
- the catalytic pre-converter (see **19B**, **Exhaust**, **Catalytic pre-converter: Removal - Refitting**, page **19B-29**) ,
- the bulkhead heat shield mountings,
- the bulkhead soundproofing clips.

❑ Remove the bulkhead «soundproofing-heat shield » assembly.

AIR CONDITIONING or CLIMATE CONTROL

❑ Remove the connecting pipe between the evaporator and the dehydrator reservoir (see **Dehydration canister - evaporator connecting pipe: Removal - Refitting**) (MR 364, 62A, Air conditioning).

❑ Remove:

- the hydraulic unit (see **Brake hydraulic assembly: Removal - Refitting**) (MR 364, 38C, Anti-lock braking system),
- the scuttle panel grille (see **Scuttle panel grille: Removal - Refitting**) (MR 365, 56A, Exterior equipment).

AIR CONDITIONING or CLIMATE CONTROL

❑ Remove the bolt connecting the hose between the condenser and the evaporator on the evaporator.

❑ Unclip the connecting hose between the condenser and the evaporator.

❑ Disconnect the evaporator connecting hose.

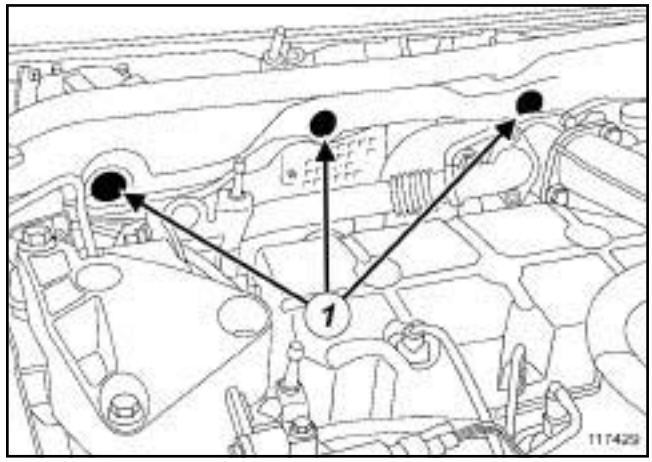

117429

❑ Remove:

- the clips (**1**) from the scuttle panel partition,

B84 or C84 or G84 or S84, and F9Q, and 803 or 804

- the scuttle panel partition bolt,
- the scuttle panel partition.

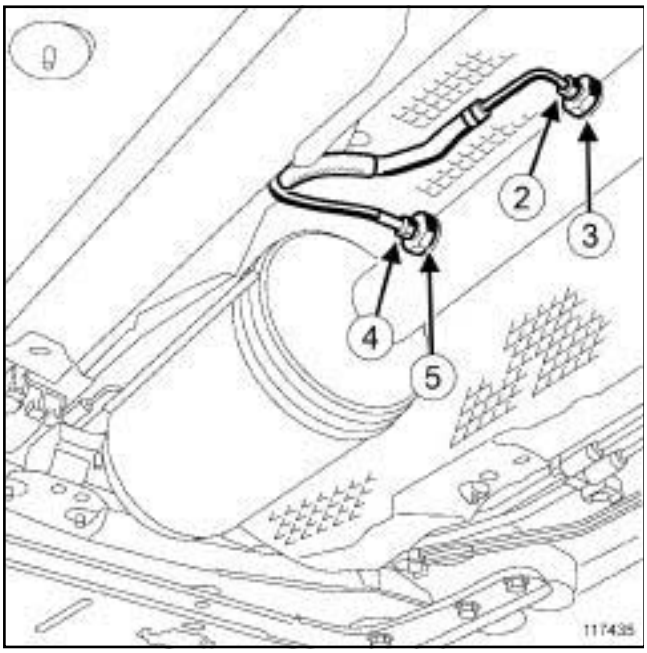

117435

❑ Remove the downstream pressure measurement connection (**2**) from its adapter (**3**) bolted onto the exhaust pipe.

WARNING
The pressure measurement circuit must never be opened except at the adapters on the exhaust pipe.

WARNING
When the pressure measurement tapping is removed from its adapter, the adapter must be held with a lock wrench.

❑ Remove the downstream particle filter temperature sensor (**4**) from its adapter (**5**) screwed into the exhaust pipe.

WARNING
When the downstream particle filter temperature sensor is removed from its adapter, the adapter must be held with a lock wrench.

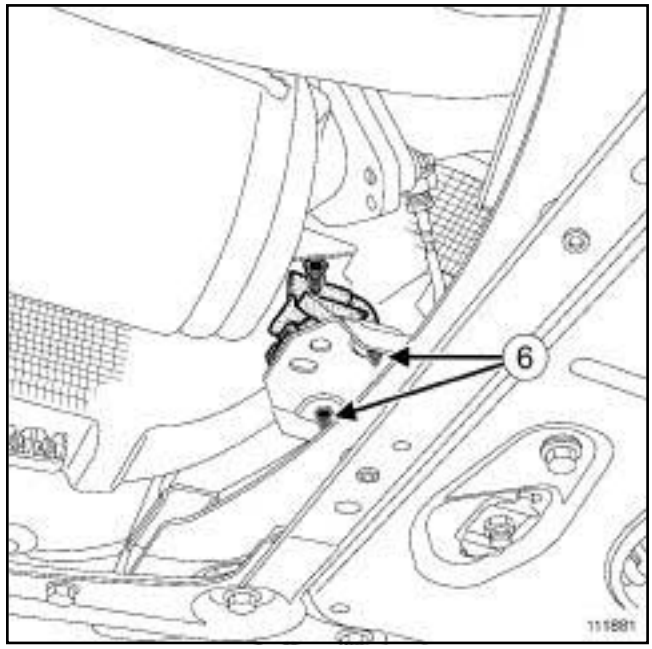

111881

❑ Remove the particle filter rubber mounting bush bolts (**6**) on the sub-frame.

Note:
Mark with a pen the position of the exhaust rubber mounting bush supports on the vehicle body.

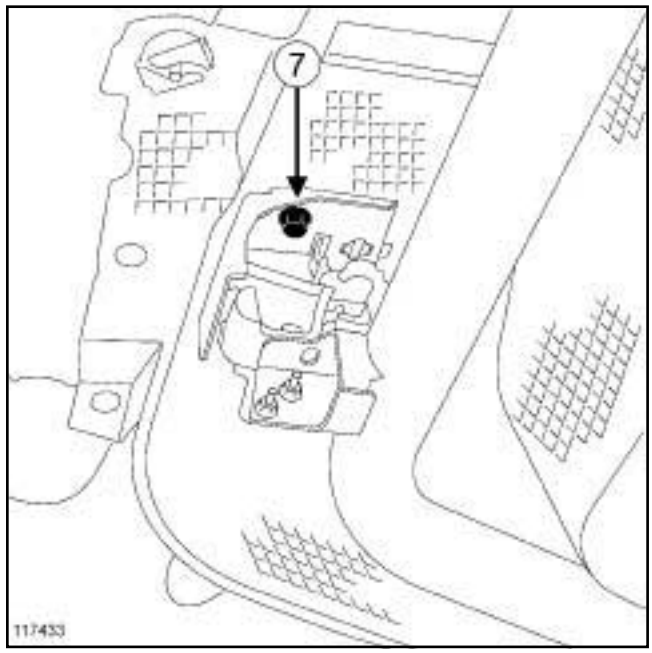

117433

❑ Remove the exhaust system rubber mounting bush bolt (**7**) .

B84 or C84 or G84 or S84, and F9Q, and 803 or 804

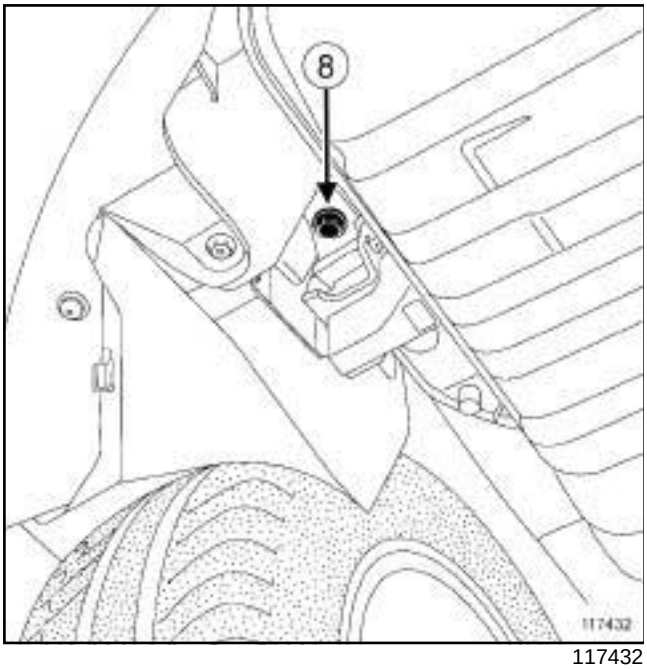

117432

❑ Remove the silencer rubber mounting bush bolt (**8**) .

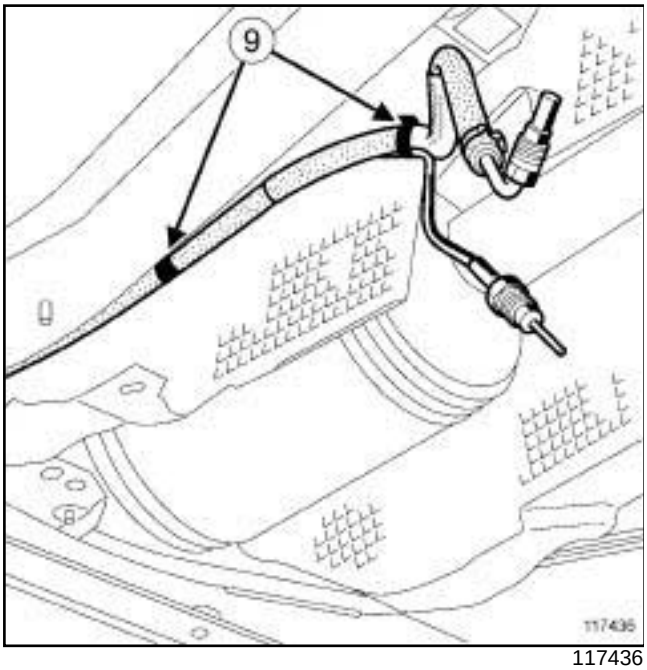

117436

❑ Detach the particle filter heat shield wiring harness at (**9**) .

❑ Withdraw the exhaust pipe towards the rear of the vehicle.

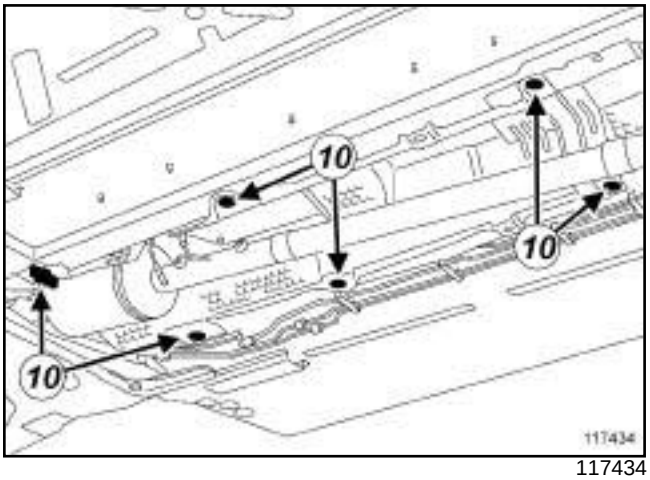

117434

❑ Remove the particle filter mountings (**10**) .

❑ Push the particle filter heat shield backwards.

Note:

If necessary, move the exhaust system so that heat shield can move backwards.

Ensure that the particle filter heat shield is not blocked by the connecting hose.

B84 or C84 or G84 or S84, and F9Q, and 803 or 804

II - OPERATION FOR REMOVAL OF PART CONCERNED

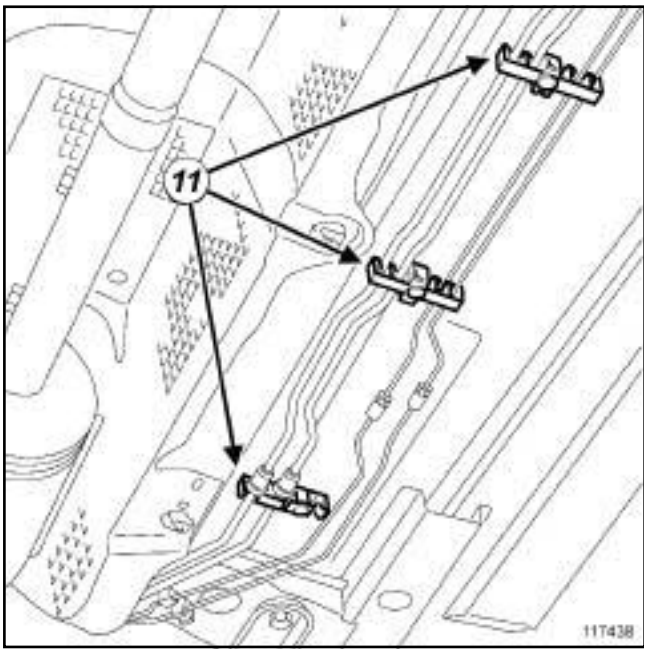

117438

❑ Unclip the underbody fuel supply and return pipes at (**11**) .

IMPORTANT

During this operation, be sure to:

- refrain from smoking or bringing red hot objects close to the working area,
- beware of fuel splashes when disconnecting the union,
- protect sensitive areas from fuel outflow.

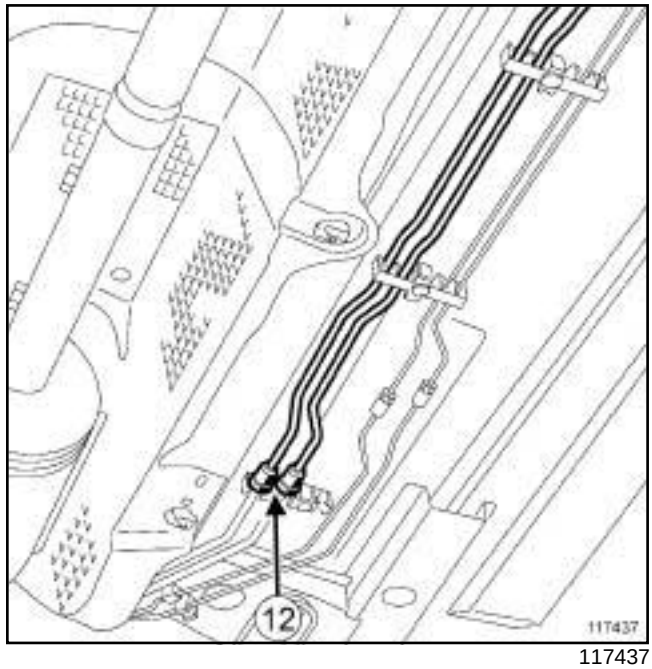

117437

❑ Disconnect:

- the fuel supply pipe underbody union (**12**) ,
- the fuel return pipe underbody union (**12**) .

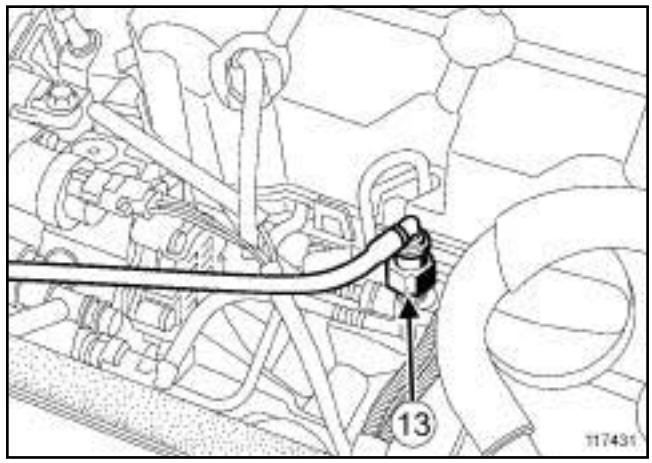

117431

❑ Disconnect:

- the fuel supply pipe union on the diesel filter,
- the fuel return pipe union (**13**) .

Note:

Insert the fuel supply pipe union in a container and activate the manual priming pump to drain the diesel from the fuel supply pipe.

B84 or C84 or G84 or S84, and F9Q, and 803 or 804

❏ Unclip the fuel supply and return pipes.

> Note:
>
> Mark the fuel supply and return pipe routing.

❏ Remove the « fuel supply and return pipe » assembly.

REFITTING

I - REFITTING OPERATION FOR PART CONCERNED

❏ Refit the « fuel supply and return pipe » assembly.

❏ Clip on the fuel supply and return pipes.

❏ Connect:

- the fuel supply pipe quick-release union on the diesel filter,
- the quick-release union on the fuel return pipe,
- the fuel supply pipe underbody quick-release union,
- the fuel return pipe underbody quick-release union.

❏ Clip on the underbody fuel supply and return pipes.

II - FINAL OPERATION.

❏ Move the particle filter heat shield forward.

❏ Clip on the particle filter heat shield wiring harness.

❏ Refit:

- the particle filter heat shield,
- the particle filter heat shield mountings,
- the silencer rubber mounting bush bolt,
- the exhaust system rubber mounting bush bolt,
- the particle filter rubber mounting bush bolts on the sub-frame,
- the downstream pressure measurement connection on the exhaust system (see **19B**, **Exhaust**, **Particle filter pressure sensor: Removal - Refitting**, page **19B-114**) ,
- the downstream temperature sensor on the exhaust system (see **19B**, **Exhaust**, **Particle filter temperature sensors: Removal - Refitting**, page **19B-125**) ,
- the scuttle panel partition,
- the scuttle panel partition bolt,
- the scuttle panel partition clips.

AIR CONDITIONING or CLIMATE CONTROL

❏ Connect the evaporator-condenser connecting hose to the evaporator.

❏ Clip on the connecting hose between the condenser and the evaporator.

❏ Refit the bolt connecting the hose between the condenser and the evaporator on the evaporator.

❏ Torque tighten the **evaporator-condenser connecting hose union bolt on the evaporator (8 Nm)**.

❏ Refit:

- the hydraulic unit (see **Brake hydraulic assembly: Removal - Refitting**) (MR 364, 38C, Anti-lock braking system),
- the scuttle panel grille (see **Scuttle panel grille: Removal - Refitting**) (MR 365, 56A, Exterior equipment).

AIR CONDITIONING or CLIMATE CONTROL

❏ Refit the connecting pipe between the evaporator and the dehydrator reservoir (see **Dehydration canister - evaporator connecting pipe: Removal - Refitting**) (MR 364, 62A, Air conditioning).

❏ Refit:

- the « soundproofing-heat shield » assembly to the bulkhead.
- the bulkhead soundproofing clips,
- the bulkhead heat shield mountings,
- the catalytic pre-converter (see **19B**, **Exhaust**, **Catalytic pre-converter: Removal - Refitting**, page **19B-29**) ,
- the front right-hand driveshaft (see **Front right-hand wheel driveshaft: Removal - Refitting**) (MR 364, 29A, Driveshaft),
- the upper engine tie-bar (see **19D**, **Engine mounting**, **Suspended engine mounting**, page **19D-1**) .

B84 or C84 or G84 or S84, and F9Q, and 803 or 804

AIR CONDITIONING or CLIMATE CONTROL

❏ Fill the coolant circuit using the **refrigerant charging station**.

❏ Refit:

- the front section of the front right-hand wheel arch liner (see **Front wheel arch liner: Removal - Refitting**) (MR 365, 55A, Exterior protection),
- the front-right hand wheel (see **Wheel: Removal - Refitting**) (MR 364, 35A, Wheels and tyres),
- the engine undertray,
- the engine cover.

❏ Connect the battery (see **Battery : Removal - Refitting**) (MR 364, 80A, Battery).

❏ Prime the fuel circuit using the manual priming pump.

B84 or C84 or G84 or S84, and K9K, and 732 – B84 or C84 or E84 or K84 or L84, and M9R

IMPORTANT
Always wear protective gear (gloves, goggles and breathing mask).

REMOVAL

I - REMOVAL PREPARATION OPERATION

❑ Position the vehicle on a two-post lift (see **Vehicle: Towing and lifting**) (MR 364, 02A, Lifting equipment).

❑ Remove:

- the front right-hand wheel (see **Wheel: Removal - Refitting**) (MR 364, 35A, Wheels and tyres),
- the front section of the front right-hand wheel arch liner (see **Front wheel arch liner: Removal - Refitting**) (MR 365, 55A, Exterior protection).

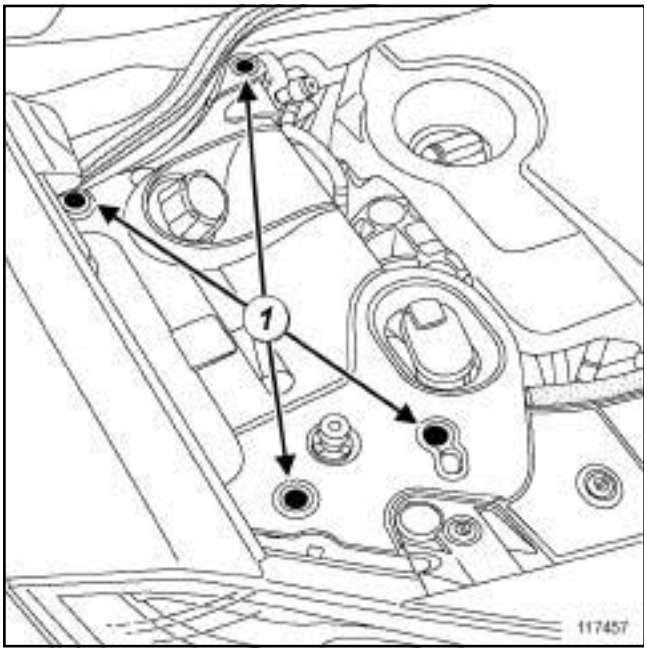

117457

❑ Remove:

- the front engine cover clips (**1**) ,
- the engine cover.

II - OPERATION FOR REMOVAL OF PART CONCERNED

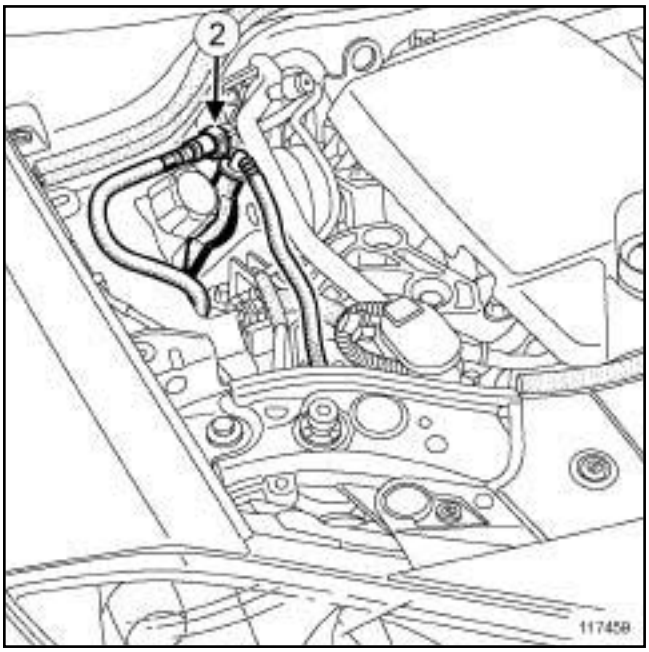

117459

❑ Disconnect:

- the manual priming pump quick-release union (**2**) ,
- the manual priming pump quick-release union on the diesel filter.

IMPORTANT

During this operation, be sure to:

- refrain from smoking or bringing red hot objects close to the working area,
- be careful of fuel splashes when disconnecting the union.

❑ Detach the manual priming pump.

❑ Remove the manual priming pump.

REFITTING

I - REFITTING OPERATION FOR PART CONCERNED

❑ Refit the manual priming pump.

❑ Clip on the manual priming pump.

❑ Connect:

- the manual priming pump quick-release union,
- the manual priming pump quick-release union on the diesel filter.

B84 or C84 or G84 or S84, and K9K, and 732 – B84 or C84 or E84 or K84 or L84, and M9R

II - FINAL OPERATION.

❏ Refit:

- the engine cover,
- the front engine cover clips,
- the front section of the front right-hand wheel arch liner (see **Front wheel arch liner: Removal - Refitting**) (MR 365, 55A, Exterior protection),
- the front right-hand wheel (see **Wheel: Removal - Refitting**) (MR 364, 35A, Wheels and tyres).

❏ Prime the fuel circuit using the manual priming pump.

B84 or C84 or G84 or S84, and K9K, and 722 or 724 or 728 or 729 – B84 or C84 or G84 or S84, and F9Q, and 800 or 808

Essential equipment
refrigerant charging station

Tightening torques ▽	
evaporator-condenser connecting hose union bolt on the evaporator	**8 Nm**
exhaust clamp nuts on the catalytic converter	**21 Nm**

The manual priming pump cannot be separated from the fuel supply pipe; to remove the manual priming pump, remove the « fuel supply and return pipes » assembly.

IMPORTANT
Wear gloves during this operation.

REMOVAL

I - REMOVAL PREPARATION OPERATION

❑ Position the vehicle on a two-post lift (see **Vehicle: Towing and lifting**) (MR 364, 02A, Lifting equipment).

❑ Disconnect the battery (see **Battery: Removal - Refitting**) (MR 364, 80A, Battery).

❑ Remove:

- the engine cover,
- the engine undertray,
- the front-right hand wheel (see **Wheel: Removal - Refitting**) (MR 364, 35A, Wheels and tyres),
- the front section of the front right-hand wheel arch liner (see **Front wheel arch liner: Removal - Refitting**) (MR 365, 55A, Exterior protection).

B84 or C84 or G84 or S84, and K9K, and 722 or 724 or 728 or 729, and AIR CONDITIONING or CLIMATE CONTROL – B84 or C84 or G84 or S84, and F9Q, and 800 or 808, and AIR CONDITIONING or CLIMATE CONTROL

❑ Drain the refrigerant circuit using the **refrigerant charging station**.

B84 or C84 or G84 or S84, and F9Q, and 800 or 808

❑ Remove the engine upper tie-bar.

❑ Remove:

- the exhaust clamp nuts on the catalytic converter,
- the bulkhead heat shield mountings,
- the bulkhead soundproofing clips.

❑ Remove the bulkhead «soundproofing-heat shield » assembly.

❑ Remove:

- the lifting eye bolts,
- the lifting eye.

B84 or C84 or G84 or S84, and K9K, and 722 or 724 or 728 or 729, and AIR CONDITIONING or CLIMATE CONTROL – B84 or C84 or G84 or S84, and F9Q, and 800 or 808, and AIR CONDITIONING or CLIMATE CONTROL

❑ Remove the connecting pipe between the evaporator and the dehydrator reservoir (see **Dehydration canister - evaporator connecting pipe: Removal - Refitting**) (MR 364, 62A, Air conditioning).

❑ Remove the hydraulic unit (see **Brake hydraulic assembly: Removal - Refitting**) (MR 364, 38C, Anti-lock braking system).

B84 or C84 or G84 or S84, and K9K, and 722 or 724 or 728 or 729, and AIR CONDITIONING or CLIMATE CONTROL – B84 or C84 or G84 or S84, and F9Q, and 800 or 808, and AIR CONDITIONING or CLIMATE CONTROL

❑ Remove the bolt connecting the hose between the condenser and the evaporator on the evaporator.

❑ Unclip the connecting hose between the condenser and the evaporator.

❑ Disconnect the evaporator connecting hose.

❑ Remove the exhaust system heat shield mountings.

B84 or C84 or G84 or S84, and K9K, and 722 or 724 or 728 or 729 – B84 or C84 or G84 or S84, and F9Q, and 800 or 808

❏ Move the exhaust heat shield backwards.

> Note:
>
> If necessary, move the exhaust system so that heat shield can move backwards.

II - OPERATION FOR REMOVAL OF PART CONCERNED

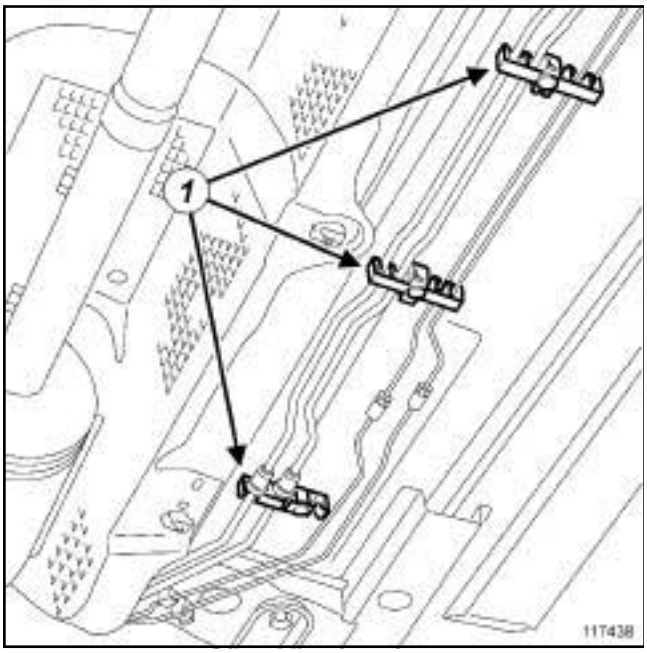

117438

❏ Unclip the underbody fuel supply and return pipes at (**1**) .

> **IMPORTANT**
>
> During this operation, be sure to:
>
> - refrain from smoking or bringing red hot objects close to the working area,
> - beware of fuel splashes when disconnecting the union,
> - protect sensitive areas from fuel outflow.

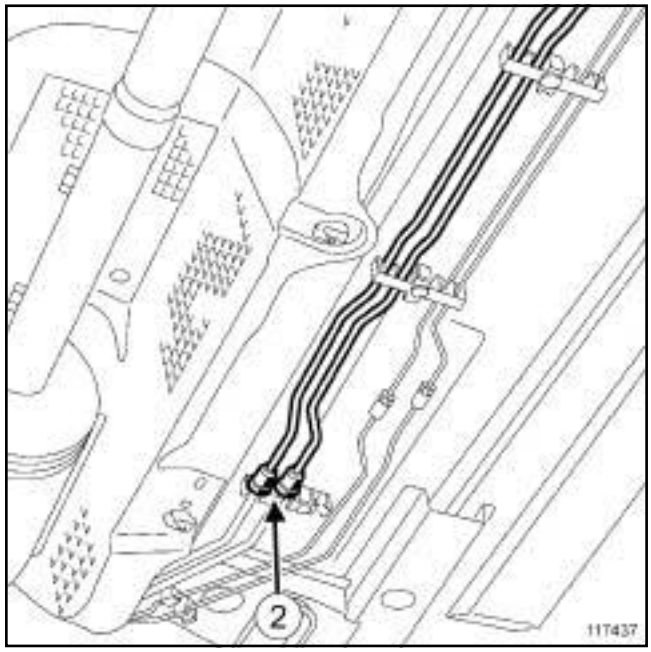

117437

❏ Disconnect:

- the fuel supply pipe underbody quick-release union (**2**) ,
- the fuel return pipe underbody quick-release union (**2**) .

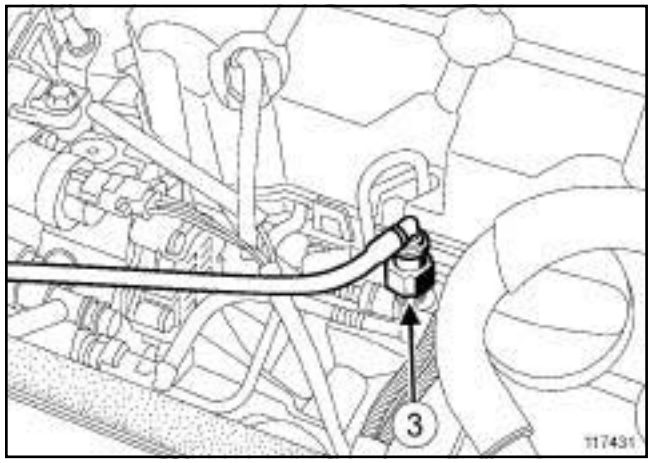

117431

❏ Disconnect:

- the fuel supply pipe quick-release union on the diesel filter,
- the fuel return pipe quick-release union (**3**) .

> Note:
>
> Insert the fuel supply pipe union in a container and activate the manual priming pump to drain the diesel from the fuel supply pipe.

B84 or C84 or G84 or S84, and K9K, and 722 or 724 or 728 or 729 – B84 or C84 or G84 or S84, and F9Q, and 800 or 808

❏ Unclip the fuel supply and return pipes.

Note:

Mark the fuel supply and return pipe routing.

❏ Remove the « fuel supply and return pipe » assembly.

REFITTING

I - REFITTING OPERATION FOR PART CONCERNED

❏ Refit the « fuel supply and return pipe » assembly.

❏ Clip on the fuel supply and return pipes.

❏ Connect:

- the fuel supply pipe quick-release union on the diesel filter,
- the quick-release union on the fuel return pipe,
- the fuel supply pipe underbody quick-release union,
- the fuel return pipe underbody quick-release union.

❏ Clip on the underbody fuel supply and return pipes.

II - FINAL OPERATION.

❏ Move the exhaust system heat shield forward.

❏ Refit the exhaust system heat shield mountings.

B84 or C84 or G84 or S84, and K9K, and 722 or 724 or 728 or 729, and AIR CONDITIONING or CLIMATE CONTROL – B84 or C84 or G84 or S84, and F9Q, and 800 or 808, and AIR CONDITIONING or CLIMATE CONTROL

❏ Connect the evaporator-condenser connecting hose to the evaporator.

❏ Clip on the connecting hose between the condenser and the evaporator.

❏ Refit the bolt connecting the hose between the condenser and the evaporator on the evaporator.

❏ Torque tighten the **evaporator-condenser connecting hose union bolt on the evaporator (8 Nm)**.

❏ Refit the hydraulic unit (see **Brake hydraulic assembly: Removal - Refitting**) (MR 364, 38C, Anti-lock braking system).

B84 or C84 or G84 or S84, and K9K, and 722 or 724 or 728 or 729, and AIR CONDITIONING or CLIMATE CONTROL – B84 or C84 or G84 or S84, and F9Q, and 800 or 808, and AIR CONDITIONING or CLIMATE CONTROL

❏ Refit the connecting pipe between the evaporator and the dehydrator reservoir (see **Dehydration canister - evaporator connecting pipe: Removal - Refitting**) (MR 364, 62A, Air conditioning).

❏ Refit:

- the lifting eye,
- the lifting eye bolts,
- the « soundproofing-heat shield » assembly to the bulkhead,
- the bulkhead soundproofing clips,
- the bulkhead heat shield mountings,
- the exhaust clamp nuts on the catalytic converter.

❏ Torque tighten the **exhaust clamp nuts on the catalytic converter (21 Nm)**.

B84 or C84 or G84 or S84, and F9Q, and 800 or 808

❏ Refit the upper engine tie-bar (see **19D**, **Engine mounting**, **Suspended engine mounting**, page **19D-1**) .

B84 or C84 or G84 or S84, and K9K, and 722 or 724 or 728 or 729, and AIR CONDITIONING or CLIMATE CONTROL – B84 or C84 or G84 or S84, and F9Q, and 800 or 808, and AIR CONDITIONING or CLIMATE CONTROL

❏ Fill the coolant circuit using the **refrigerant charging station**.

❏ Refit:

- the front section of the front right-hand wheel arch liner (see **Front wheel arch liner: Removal - Refitting**) (MR 365, 55A, Exterior protection),
- the front-right hand wheel (see **Wheel: Removal - Refitting**) (MR 364, 35A, Wheels and tyres),

B84 or C84 or G84 or S84, and K9K, and 722 or 724 or 728 or 729 – B84 or C84 or G84 or S84, and F9Q, and 800 or 808

- the engine undertray,
- the engine cover.

❏ Connect the battery (see **Battery : Removal - Refitting**) (MR 364, 80A, Battery).

❏ Prime the fuel circuit using the manual priming pump.

B84 or C84 or G84 or S84, and F4R or K4J or K4M

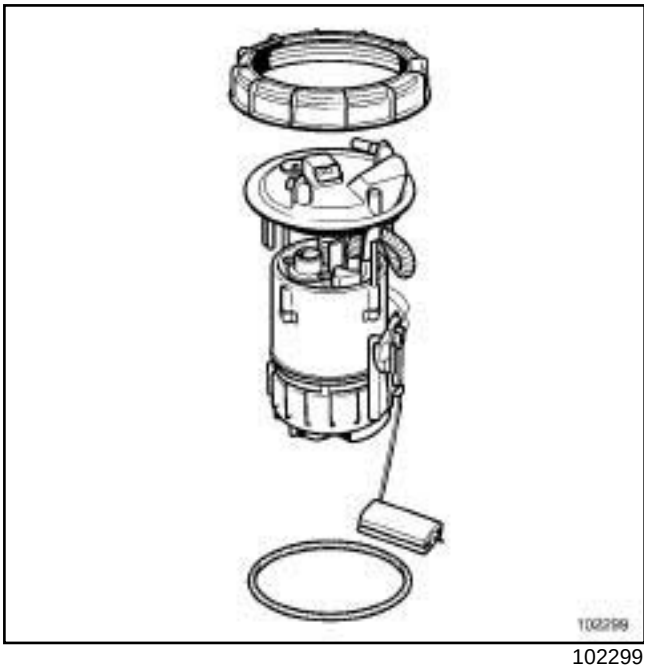

102299

The fuel filter is located in the fuel tank; it is integrated into the « pump-sender-filter » assembly and cannot be removed.

The « pump-sender-filter » assembly must be replaced if one of the components is faulty.

The filter is intended to have a long service life.

Checking the fuel supply pressure and the pump delivery rate is the equivalent of running fault finding on the « pump-sender-filter » assembly.

B84 or C84 or E84 or K84 or L84, and M9R

IMPORTANT

During this operation, be sure to:

- refrain from smoking or bringing red hot objects close to the working area,
- be careful of fuel splashes when disconnecting the union.

Note:

Ensure you have a new fuel filter before opening the fuel circuit.

REMOVAL

I - REMOVAL PREPARATION OPERATION

❑ Position the vehicle on a two-post lift (see **Vehicle: Towing and lifting**) (MR 364, 02A, Lifting equipment).

❑ Remove:

- the front right-hand wheel (see **Wheel: Removal - Refitting**) (MR 364, 35A, Wheels and tyres),
- the front right-hand wheel arch liner (see **Front wheel arch liner: Removal - Refitting**) (MR 365, 55A, Exterior protection).

II - OPERATION FOR REMOVAL OF PART CONCERNED

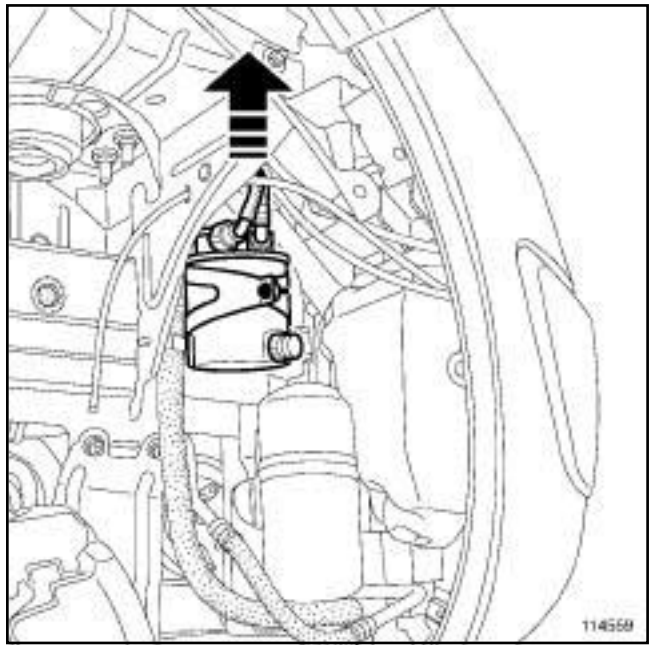

114559

❑ Remove the fuel filter from its mounting on the body by pushing the « filter - metal strap » assembly upwards.

Note:

Make preparations for fuel outflow.

❑ Disconnect all of the fuel supply pipe unions on the fuel filter.

WARNING

Keep the pipe unions away from contaminated areas.

❑ Take the fuel filter out of the vehicle.

Note:

Only use wipes with part no. **77 11 211 707** to clean the filter and pipes once the fuel circuit is open.

REFITTING

I - REFITTING OPERATION FOR PART CONCERNED

❑ Connect the fuel supply pipes to the fuel filter.

B84 or C84 or E84 or K84 or L84, and M9R

❑ Refit the « filter - metal strap » assembly to its support on the body.

> Note:
>
> Check that the filter is correctly fixed and positioned on its mounting by shaking it: the filter must not move.
>
> If necessary, remove the filter and gently move the metal strap retaining brackets.

II - FINAL OPERATION.

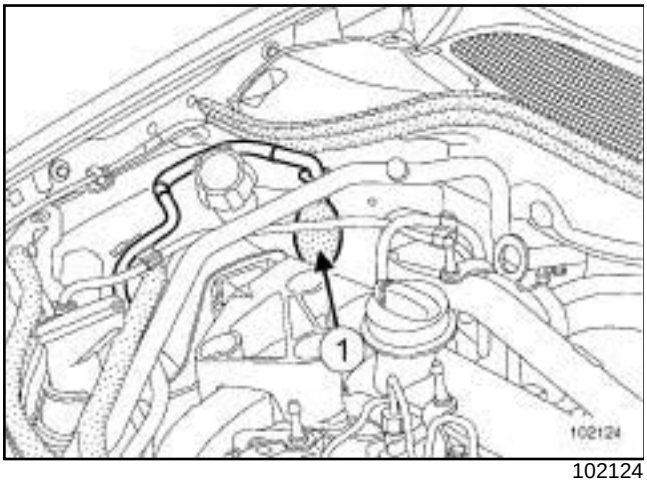

102124

❑ Prime the fuel circuit using the manual priming pump (**1**) (automatic degassing).

❑ Check there are no leaks from the unions on the filter.

> Note:
>
> Regularly bleed the water that has collected in the fuel filter through the bleed plug.
>
> Some vehicles have a sensor for detecting water in the diesel fuel, located in the base of the filter. If water is detected in the circuit, a fault warning light on the instrument panel comes on.

❑ Refit:

- the front right-hand wheel arch liner (see **Front wheel arch liner: Removal - Refitting**) (MR 365, 55A, Exterior protection),
- the front right-hand wheel (see **Wheel: Removal - Refitting**) (MR 364, 35A, Wheels and tyres).

B84 or C84 or G84 or S84, and F9Q

IMPORTANT
Consult the safety and cleanliness advice and operation recommendations before carrying out any repair (see **13B**, **Diesel injection**, **Diesel injection: Precautions for repair**, page **13B-12**) .

IMPORTANT

During this operation, be sure to:

- refrain from smoking or bringing red hot objects close to the working area,
- be careful of fuel splashes when disconnecting the union.

IMPORTANT
Wear goggles with side protectors for this operation.

IMPORTANT
Wear latex gloves during the operation.

Note:

Regularly bleed the water that has collected in the fuel filter through the bleed screw (see relevant **maintenance handbook**).

WARNING
To avoid any corrosion or damage, protect the areas on which fuel is likely to run.

The fuel filter is located behind the right-hand headlight. It is contained in a removable cartridge. This cartridge has a built-in fuel heater comprising a resistor and a temperature switch.

Ensure that you have a new fuel filter before opening the fuel circuit.

REMOVAL

I - REMOVAL PREPARATION OPERATION

❑ Disconnect the battery (see **Battery: Removal - Refitting**) (MR 364, 80A, Battery).

❑ Remove:

- the front right-hand wheel (see **Wheel: Removal - Refitting**) (MR 364, 35A, Wheels and tyres),
- the front right-hand wheel arch liner (see **Front wheel arch liner: Removal - Refitting**) (MR 365, 55A, Exterior protection).

II - OPERATION FOR REMOVAL OF PART CONCERNED

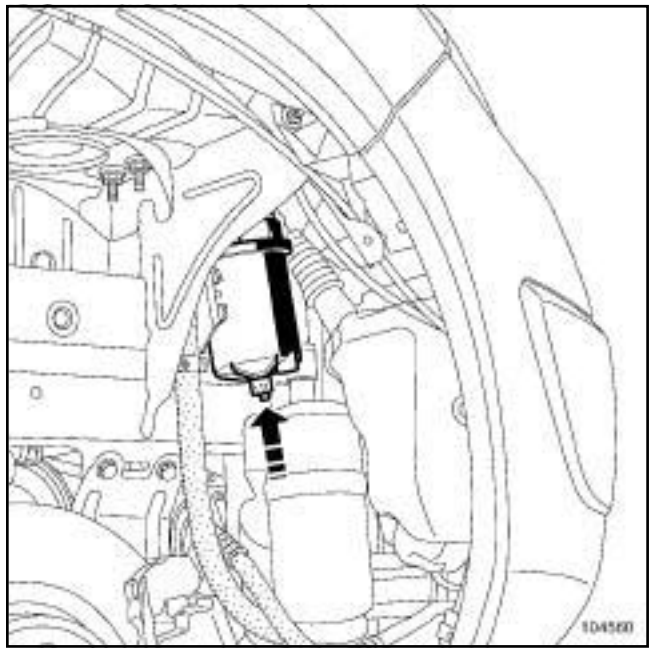

104560

❑ Unclip the fuel filter from its mounting by pushing it upwards.

B84 or C84 or G84 or S84, and F9Q

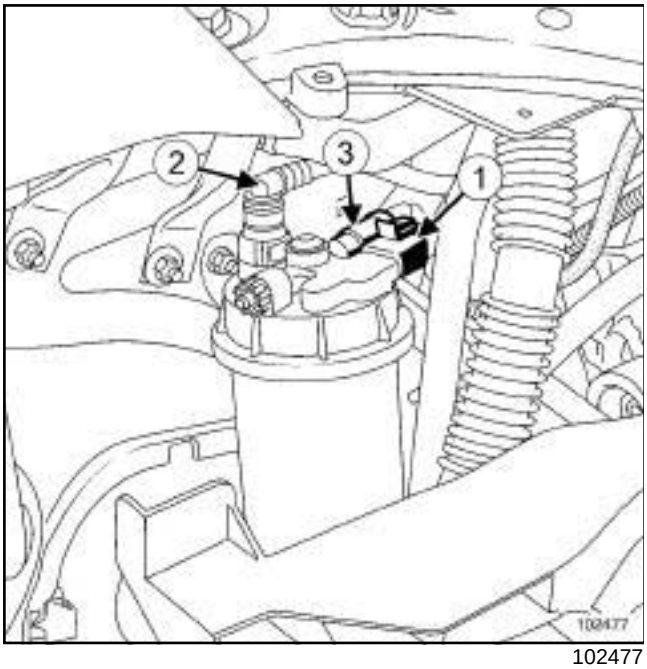

102477

❑ Disconnect the fuel heater connector (**1**) from the fuel filter.

WARNING
To prevent impurities from entering the circuit, plugs must be fitted to the openings of all the fuel circuit components exposed to the open air.

WARNING
Keep the pipe unions away from contaminated areas.

❑ Disconnect the fuel filter:

- the pipe (**2**) coming from the tank,
- the engine supply pipe (**3**) .

❑ Remove the fuel filter.

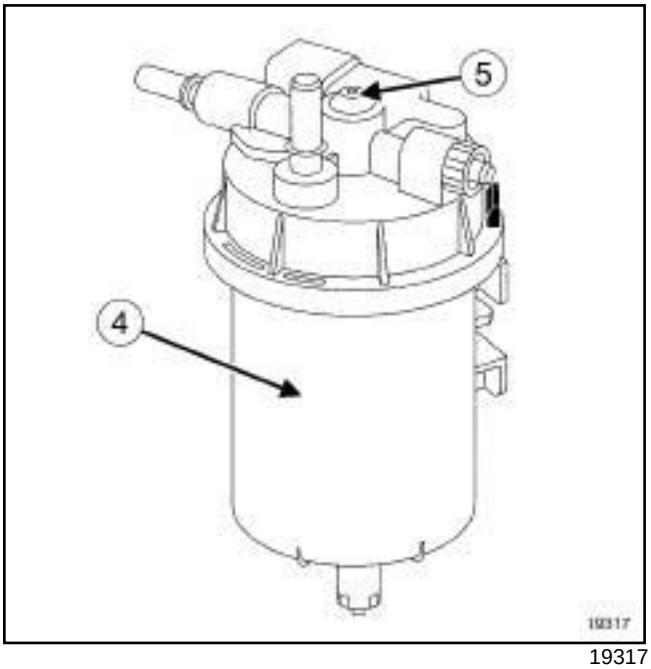

19317

❑ Mark the position of the fuel filter in relation to the bowl (**4**) .

❑ Remove the cover bolt (**5**) on the bowl.

❑ Open the fuel filter and replace:

- the filter element,
- the seal,

REFITTING

I - REFITTING OPERATION FOR PART CONCERNED

❑ **parts always to be replaced: fuel filter seal (11, 03,01,07)**

❑ Refit the cover over the bowl.

WARNING
Align the marking on the cover fitted with anti-contamination caps with the marking on the bowl.

The unions must be correctly positioned on the filter.

❑ Tighten the cover bolt on the bowl.

❑ Clip the fuel filter onto its mounting.

❑ Connect to the fuel filter:

- the fuel supply pipes,
- the fuel heater connector.

B84 or C84 or G84 or S84, and F9Q

II - FINAL OPERATION.

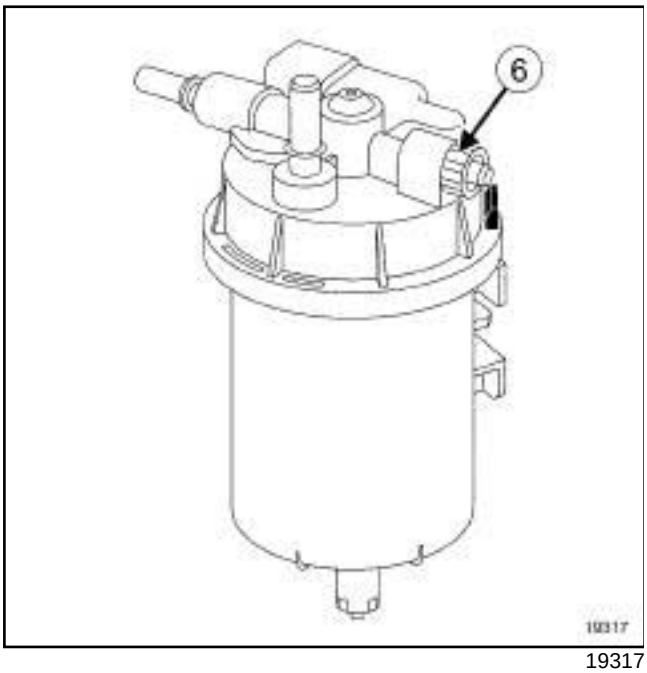

19317

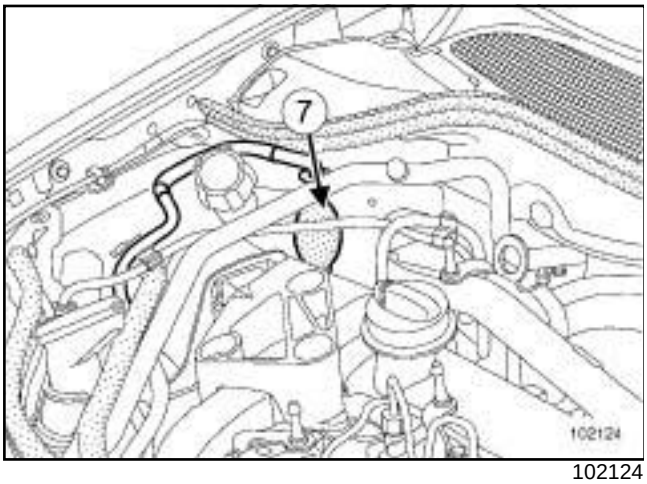

102124

- ❑ Turn the air bleed screw (**6**) 360 degrees,
- ❑ Activate the manual priming pump (**7**) until there are no air bubbles in the fuel,
- ❑ Retighten the bleed screw.
- ❑ Activate the manual priming pump once more.
- ❑ Refit:
  - the front right-hand wheel arch liner (see **Front wheel arch liner: Removal - Refitting**) (MR 365, 55A, Exterior protection),
  - the front right-hand wheel (see **Wheel: Removal - Refitting**) (MR 364, 35A, Wheels and tyres).
- ❑ Connect the battery (see **Battery : Removal - Refitting**) (MR 364, 80A, Battery).

Note:

Regularly bleed out water that has accumulated in the diesel filter through the bleed plug.

Some vehicles have a sensor for detecting water in the diesel fuel, located in the diesel filter. If water is detected in the circuit, the injection fault warning light on the instrument panel comes on.

K9K, and 724 or 732 or 734

WARNING

During this operation, it is essential to:

- refrain from smoking or bringing red hot objects close to the working area,
- beware of fuel splashes when disconnecting the union,
- protect sensitive areas from fuel outflow.

Note:

Make sure you have a new diesel filter before opening the fuel circuit.

REMOVAL

I - REMOVAL PREPARATION OPERATION

❑ Position the vehicle on a two-post lift (see **Vehicle: Towing and lifting**) (MR 364, 02A, Lifting equipment).

❑ Disconnect the battery (see **Battery: Removal - Refitting**) (MR 364, 80A, Battery).

❑ Remove:

- the front right-hand wheels (see **Wheel: Removal - Refitting**) (MR 364, 35A, Wheels and tyres),
- the front section of the front right-hand wheel arch liner (see **Front wheel arch liner: Removal - Refitting**) (MR 365, 55A, Exterior protection).

II - OPERATION FOR REMOVAL OF PART CONCERNED

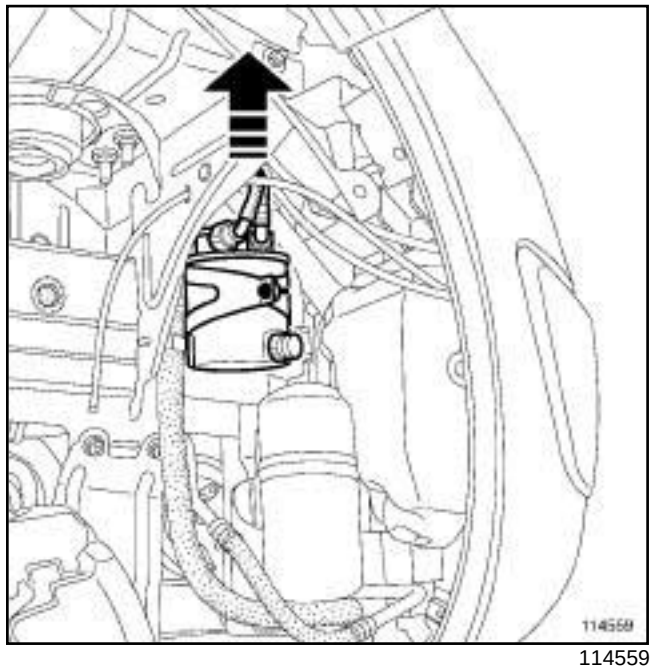

114559

❑ Remove the diesel filter from its support on the body by pushing the « filter - metal strap » assembly upwards.

❑ Disconnect all the unions from the fuel supply pipes on the diesel filter.

WARNING

To avoid any corrosion or damage, protect the areas on which fuel is likely to run.

WARNING

Prevent the hose unions from coming into contact with a polluted environment.

❑ Take the diesel filter out of the vehicle.

Note:

Only use wipes part number **77 11 211 707** to clean the filter and pipes once the fuel circuit is opened.

REFITTING

I - REFITTING OPERATION FOR PART CONCERNED

❑ Connect the fuel supply pipes onto the new diesel filter.

K9K, and 724 or 732 or 734

❑ Refit the « filter - metal strap » assembly to its support on the body.

> Note:
>
> Check that the filter is correctly fixed and positioned on its mounting by shaking it: the filter must not move.
>
> If necessary, remove the filter and gently manipulate the retaining brackets of the metal straps on its mounting.

II - FINAL OPERATION.

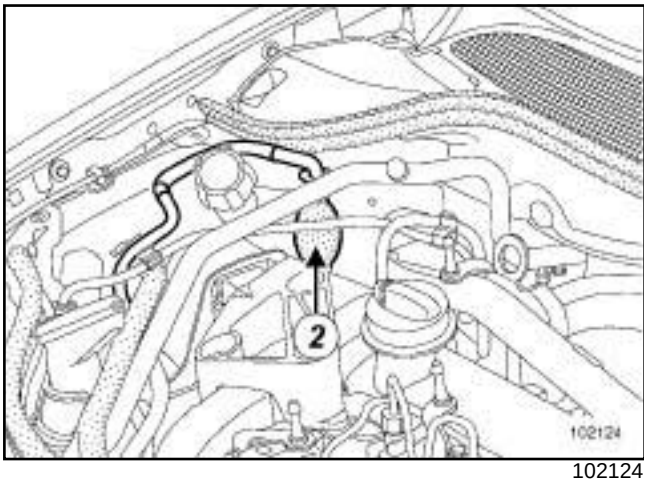

102124

❑ Prime the fuel circuit using the manual priming pump (**2**) (automatic degassing).

❑ Check there are no leaks from the unions on the filter.

❑ Refit:

- the front section of the front right-hand wheel arch liner (see **Front wheel arch liner: Removal - Refitting**) (MR 365, 55A, Exterior protection),
- the front right-hand wheels (see **Wheel: Removal - Refitting**) (MR 364, 35A, Wheels and tyres).

❑ Connect the battery (see **Battery : Removal - Refitting**) (MR 364, 80A, Battery).

> Note:
>
> Regularly bleed out water that has accumulated in the diesel filter through the bleed plug.
>
> Some vehicles have a sensor for detecting water in the diesel fuel, located in the base of the filter. If water is detected in the circuit, a fault warning light on the instrument panel comes on.

Diesel filter: Removal - Refitting

B84 or C84 or G84 or S84, and K9K, and 722 or 728 or 729

Tightening torques ▽	
wheel bolts	**110 N.m**

WARNING

Follow the cleanliness guidelines closely (see **13B**, **Diesel injection**, **Diesel injection: Precautions for repair**, page **13B-12**) .

The cartridge assembly must be replaced (the diesel filter is contained in a non-removable cartridge).

Order a set of blanking plugs, part number **77 01 206 804**.

REMOVAL

❑ Disconnect the battery, starting with the negative terminal.

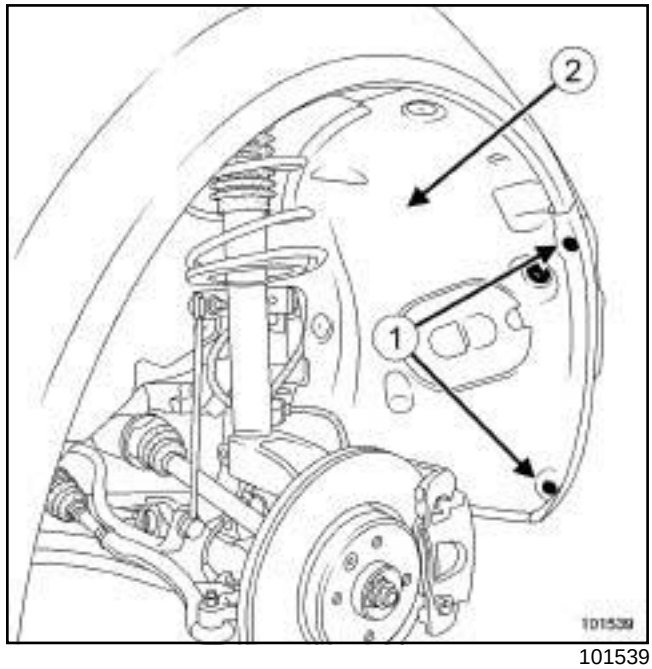

101539

❑ Remove:

- the front right-hand wheel,
- the wheel arch liner mounting bolts (**1**) ,
- the wheel arch liner clips using an unclipping tool,
- the wheel arch liner (**2**) ,
- the right-hand engine side cover,
- the diesel filter from its mounting by pushing it upwards.

❑ Disconnect all the filter pipe unions.

❑ Place blanking plugs over the open fuel supply pipes.

WARNING

Keep the pipe unions away from contaminated areas.

❑ Remove the diesel filter.

REFITTING

❑ Take the blanking plugs off the fuel supply pipes.

❑ Reconnect the pipe unions.

❑ Clip the diesel filter onto the mounting.

B84 or C84 or G84 or S84, and K9K, and 722 or 728 or 729

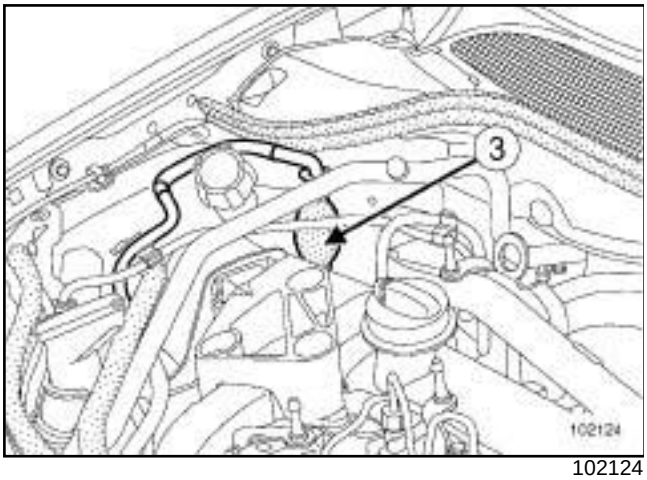

102124

- ❑ Prime the fuel system with the priming bulb (**3**) (automatic degassing).
- ❑ Proceed in the reverse order to removal.
- ❑ Torque tighten the **wheel bolts (110 N.m)**.
- ❑ Connect the battery, starting with the positive terminal.

WARNING

Carry out the necessary programming (see **Battery : Removal - Refitting**) (80A, Battery).

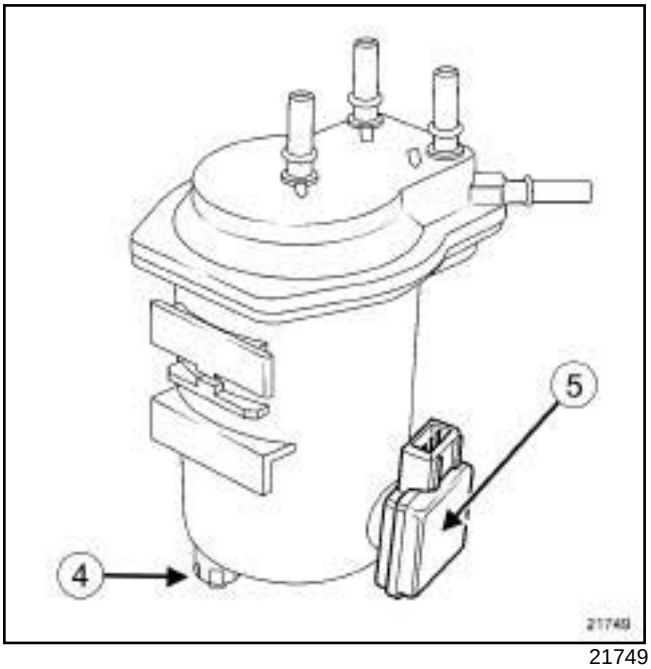

21749

❑

Regularly drain the water accumulating in the diesel fuel filter through the drain plug (**4**) .

Some vehicles have a sensor (**5**) for detecting water in the diesel fuel, located on the filter. If water is detected in the circuit, the injection fault warning light on the instrument panel comes on.

Diesel filter: Removal - Refitting

B84 or C84 or G84 or S84, and F9Q, and 800 or 803 or 804 or 808

Tightening torques ▽	
battery cover mounting bolts	**4 Nm**
wheel bolts	**110 Nm**

IMPORTANT

Before any operation:

- watch out for diesel fuel splashing when disconnecting the supply union,
- order the special high pressure injection circuit cap kit.

WARNING

- Protect sensitive areas from fuel leakage.
- Strictly observe the cleanliness guidelines.

The diesel filter is located behind the right-hand headlight. It is contained in a removable cartridge. This cartridge has a built-in diesel fuel heater, comprising a resistor and temperature switch.

Note:

Remove the diesel filter assembly to remove the cartridge.

REMOVAL

❑ Disconnect the battery (see **Battery: Removal - Refitting**) (MR 364, 80A, Battery).

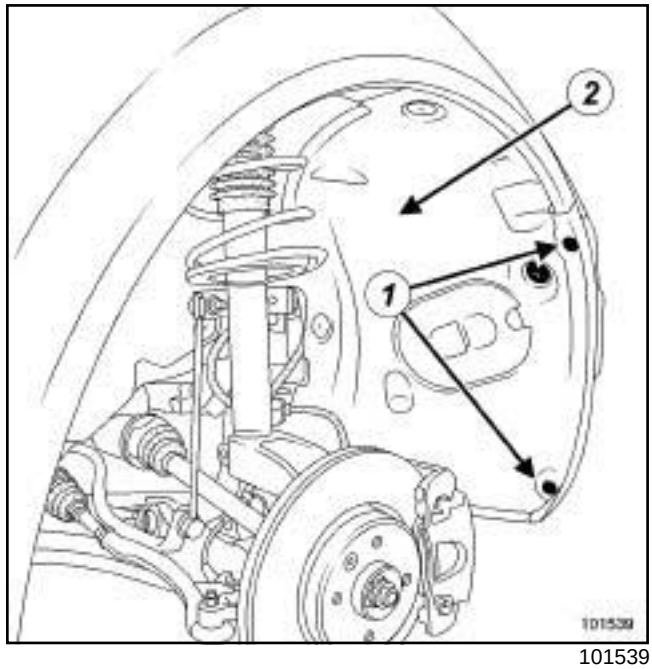

101539

❑ Remove:

- the front right-hand wheel,
- the wheel arch liner mounting bolts (**1**) ,
- the wheel arch liner clips using an unclipping tool,
- the wheel arch liner (**2**) .

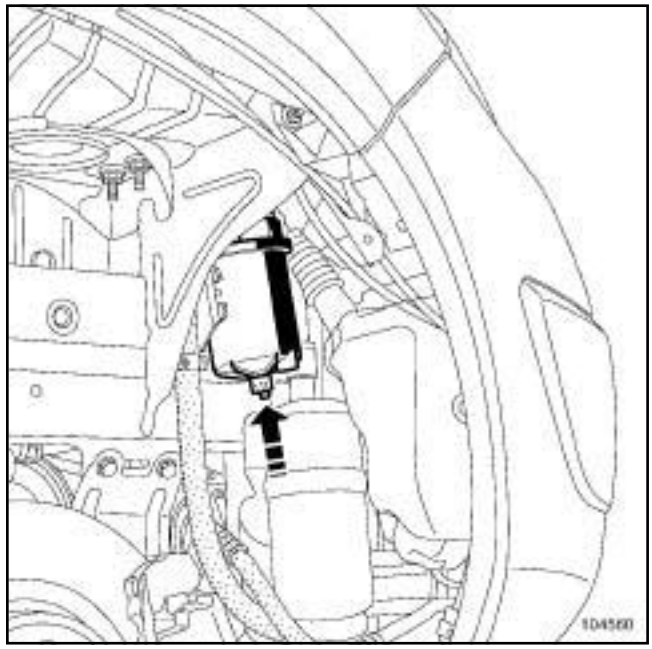

104560

❑ Unclip the diesel filter from its mounting by pushing it upwards.

B84 or C84 or G84 or S84, and F9Q, and 800 or 803 or 804 or 808

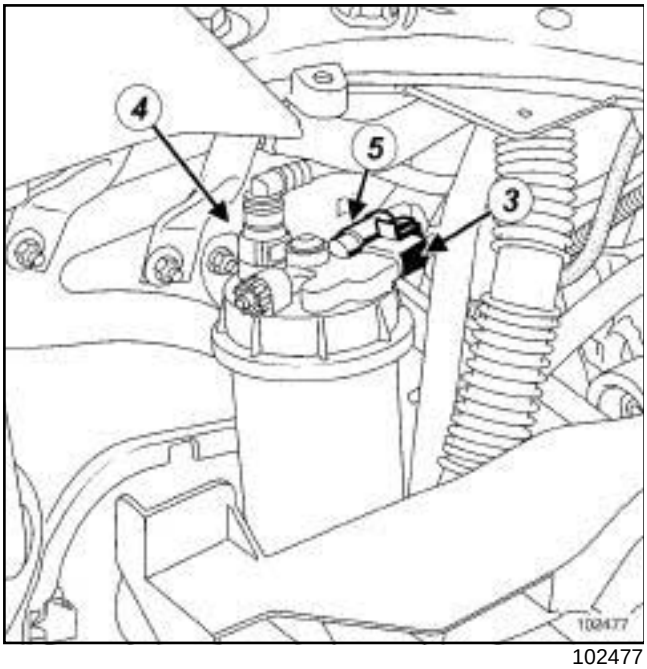

102477

❑ Disconnect the diesel heater connector (**3**) from the diesel filter.

> **WARNING**
> Keep the pipe unions away from contaminated areas.

❑ Disconnect from the diesel filter:

- the pipe ***(4)*** coming from the tank,
- the engine supply pipe ***(5)*** .

❑ fit plugs to the pipes and the filter.

❑ Remove the diesel filter.

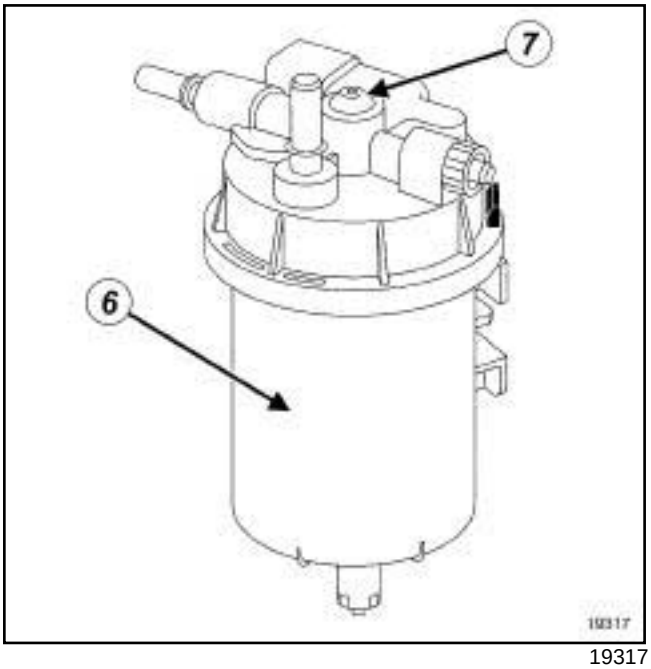

19317

❑ Mark the position of the diesel filter cover in relation to the bowl (**6**) .

❑ Remove the mounting bolt (**7**) from the cover on the bowl.

❑ Open the diesel filter and replace:

- the filter element,
- the seal,

REFITTING

❑ Always replace the filter element O-ring.

❑ Refit the cover over the bowl.

> **WARNING**
> Align the marking on the cover, fitted with blanking plugs, with the marking on the bowl.

❑ Tighten the mounting bolt on the cover over the bowl.

❑ Clip the diesel filter onto the mounting.

❑ Reconnect to the diesel filter:

- the fuel supply pipes,
- the diesel fuel heater connector,

B84 or C84 or G84 or S84, and F9Q, and 800 or 803 or 804 or 808

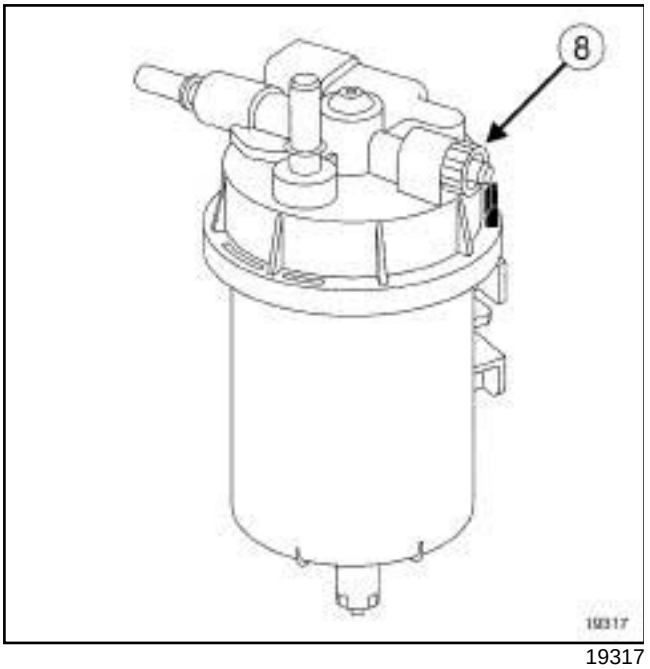

19317

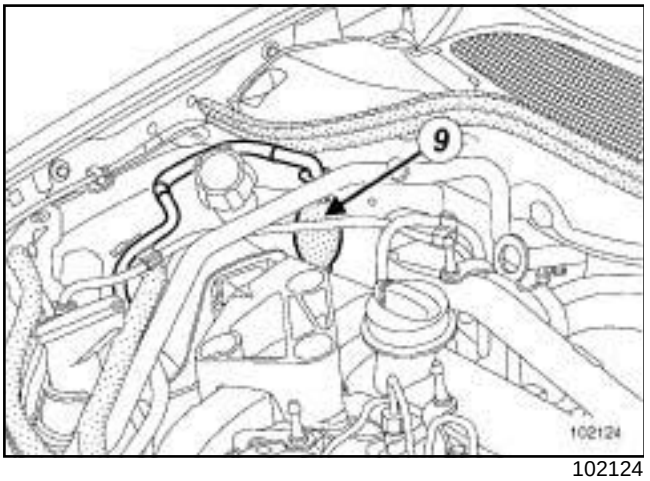

102124

- ❑ Reprime the supply circuit:
  - Turn the air bleed screw (**8**) 360 degrees,
  - operate the manual priming pump (**9**) until the fuel runs without air bubbles,
  - retighten the bleed screw (**8**) ,
  - activate the manual priming pump (**9**) once more.
- ❑ Proceed in the reverse order to removal.
- ❑ Connect the battery (see **Battery : Removal - Refitting**) (MR 364, 80A, Battery).
- ❑ Torque tighten the **battery cover mounting bolts (4 Nm)**.

Note:

Regularly bleed out water that has accumulated in the diesel filter through the bleed plug.

Some vehicles have a sensor for detecting water in the diesel fuel, located in the diesel filter. If water is detected in the circuit, the injection fault warning light on the instrument panel comes on.

- ❑ Torque tighten the **wheel bolts (110 Nm)**

K9K, and 734

REMOVAL

I - OPERATION FOR REMOVAL OF PART CONCERNED

❑ Position the vehicle on a two-post lift (see **Vehicle: Towing and lifting**) (MR 364, 02A, Lifting equipment).

> **IMPORTANT**
>
> During this operation, be sure to:
>
> - refrain from smoking or bringing red hot objects close to the working area,
> - be careful of fuel splashes when disconnecting the union.

II - OPERATION FOR REMOVAL OF PART CONCERNED

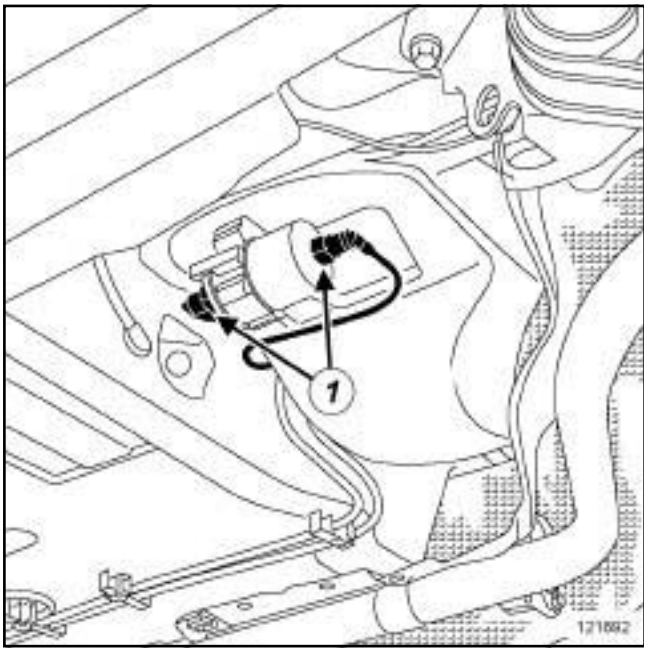

121892

❑ Unclip the particle filter injector fuel filter unions (**1**) .

> **WARNING**
> To avoid any corrosion or damage, protect the areas on which fuel is likely to run.

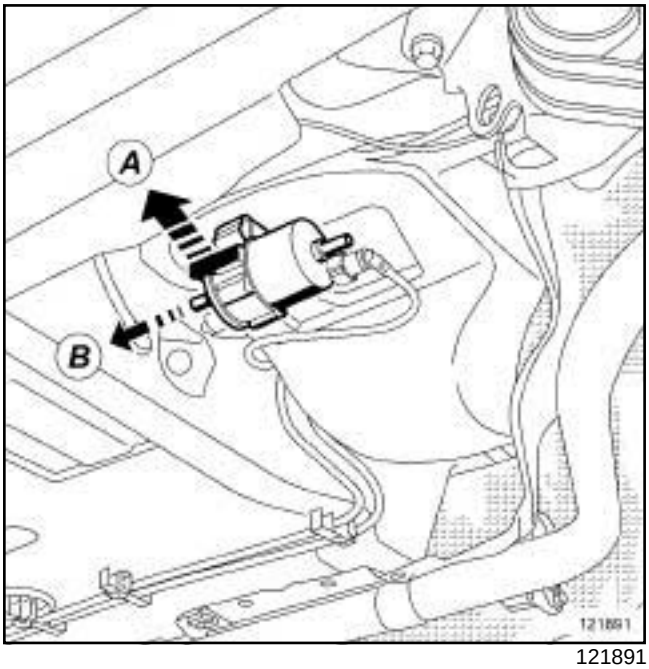

121891

❑ Remove the tab (**A**) from the particle filter injector fuel filter holder.

❑ Remove the particle filter injector fuel filter by pulling it towards (**B**) .

REFITTING

REFITTING OPERATION FOR PART CONCERNED

❑ Refit the new particle filter injector fuel filter.

❑ Clip on the particle filter injector fuel filter unions.

B84 or C84 or G84 or S84, and K4M, and 760 or 761 or 766 or 812 or 813

Tightening torques ▽	
injector rail bolts	**9 N.m**

REMOVAL

❑ Disconnect the battery (see **Battery: Removal - Refitting**) (MR 364, 80A, Battery).

❑ Remove:

- the engine covers,
- the intake distributor (see **12A**, **Fuel mixture**, **Inlet manifold: Removal - Refitting**, page **12A-49**) .

IMPORTANT

During this operation, be sure to:

- refrain from smoking or bringing red hot objects close to the working area,
- be careful of fuel splashes when disconnecting the union.

IMPORTANT

Always wear protective gear (gloves, goggles and breathing masks).

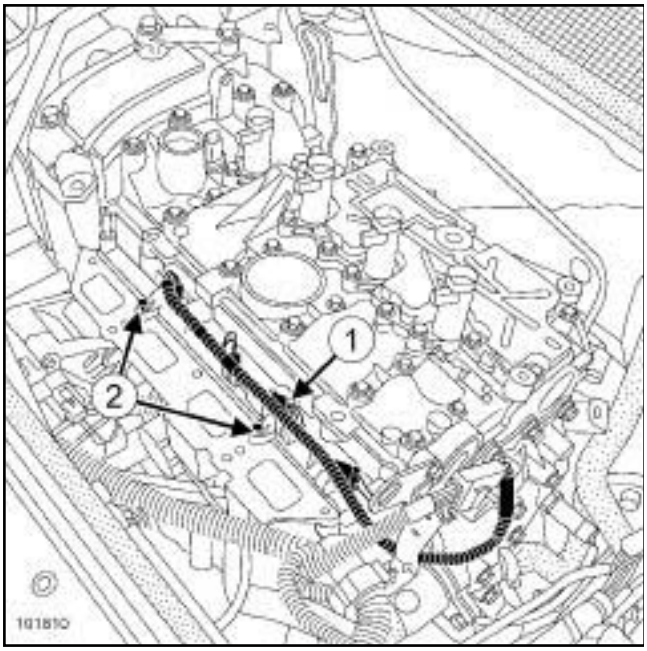

101810

❑ Disconnect the injector wiring harness (**1**) .

❑ Remove:

- the two injector rail bolts (**2**) ,
- the injector rail, pulling it carefully towards you.

ON THE WORKBENCH

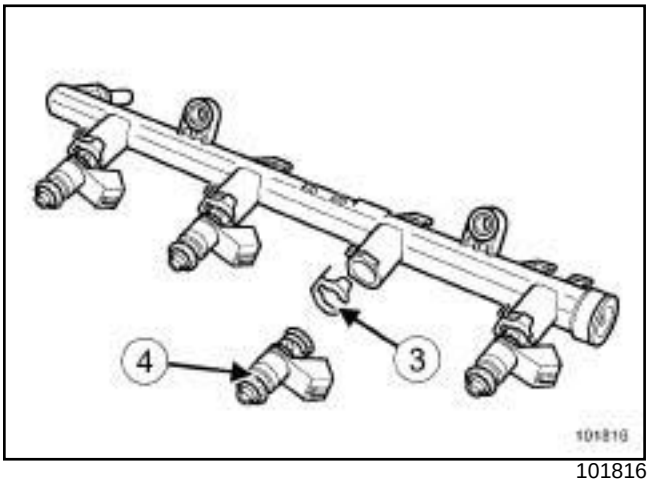

101816

❑ Remove:

- the clips (**3**) from the injectors,
- injectors (**4**) .

REFITTING

❑ You must replace the O-rings and the injector clips.

❑ Fit the injector rail.

❑ Torque tighten the **injector rail bolts (9 N.m)**.

❑ Proceed in the reverse order to removal.

❑ Connect the battery (see **Battery : Removal - Refitting**) (MR 364, 80A, Battery).

B84 or C84 or G84 or S84, and K4J, and 730 or 732 or 740 – B84 or C84 or G84 or S84, and K4M, and 764 or 768 or 788 or 856

Tightening torques ▽	
injector rail bolts	**9 N.m**

REMOVAL

❑ Disconnect the battery (see **Battery: Removal - Refitting**) (MR 364, 80A, Battery).

❑ Remove the engine covers.

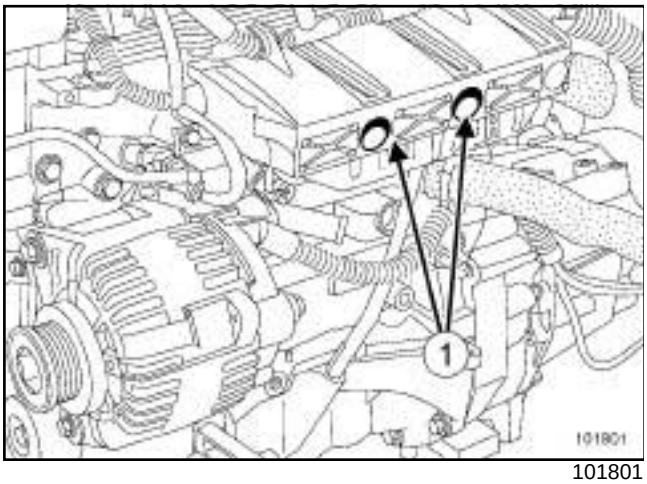

101801

❑ Remove the injector rail protector nuts (**1**) .

❑ Move the wiring harness to one side.

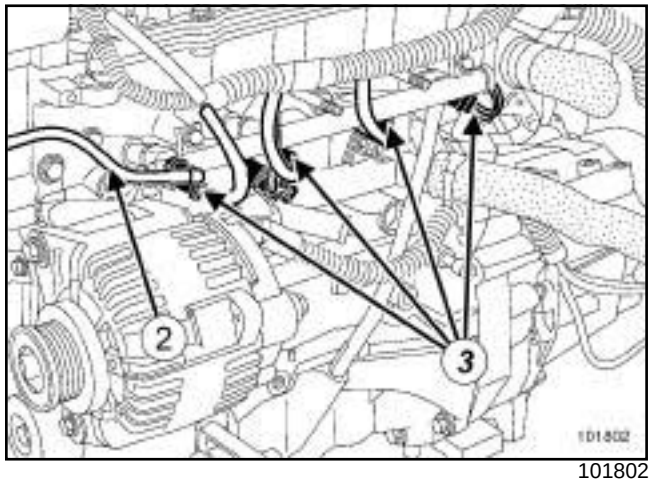

101802

❑ Disconnect:

- fuel supply pipe (**2**) ,
- the wiring harness (**3**) from the injectors and pinking sensor.

IMPORTANT

During this operation, be sure to:

- refrain from smoking or bringing red hot objects close to the working area,
- be careful of fuel splashes when disconnecting the union.

IMPORTANT

Always wear protective gear (gloves, goggles and breathing masks).

B84 or C84 or G84 or S84, and K4J, and 730 or 732 or 740 – B84 or C84 or G84 or S84, and K4M, and 764 or 768 or 788 or 856

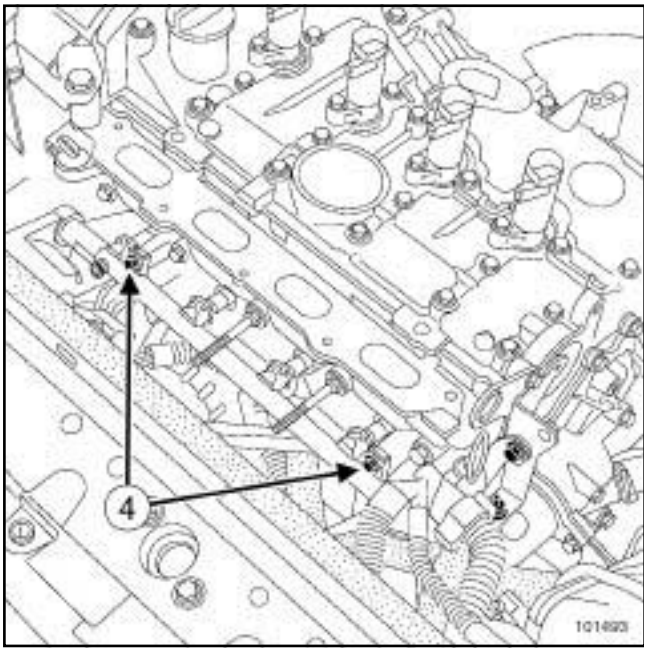

101493

❑ Remove:

- the two injector rail bolts (**4**) ,
- the injector rail, pulling it carefully towards you.

ON THE WORKBENCH

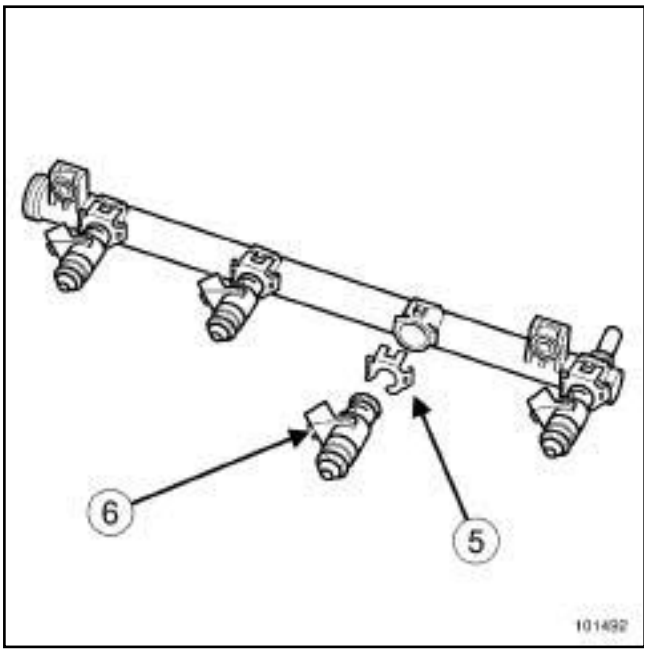

101492

❑ Remove:

- the clips (**5**) from the injectors,
- injectors (**6**) .

REFITTING

❑ The O-rings and the injector mounting clips must always be replaced with new ones.

❑ Fit the injector rail.

❑ Torque tighten the **injector rail bolts (9 N.m)**.

❑ Proceed in the reverse order to removal.

❑ Connect the battery (see **Battery : Removal - Refitting**) (MR 364, 80A, Battery).

B84 or C84 or G84 or S84, and F4R, and 770 or 771 or 776

Tightening torques ▽	
injector rail mounting bolts	**9 Nm**
battery cover mounting bolts	**4 Nm**

REMOVAL

❑ Disconnect the battery (see **Battery: Removal - Refitting**) (MR 364, 80A, Battery).

❑ Remove the engine covers.

F4R, and 770 or 771

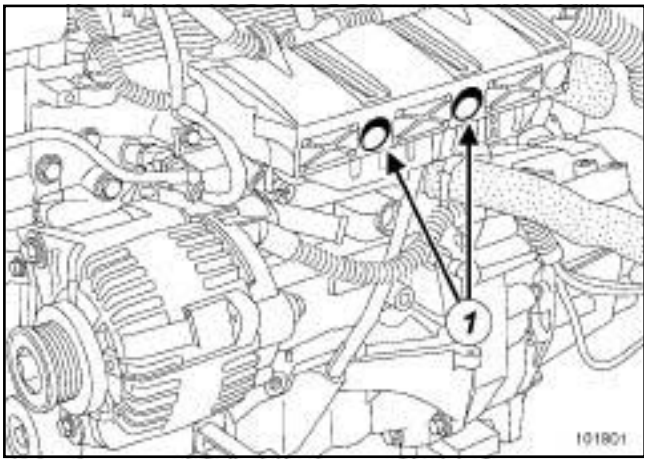

101801

❑ Remove the two mounting nuts (**1**) from the injector rail protector.

❑ Move the wiring harness to one side.

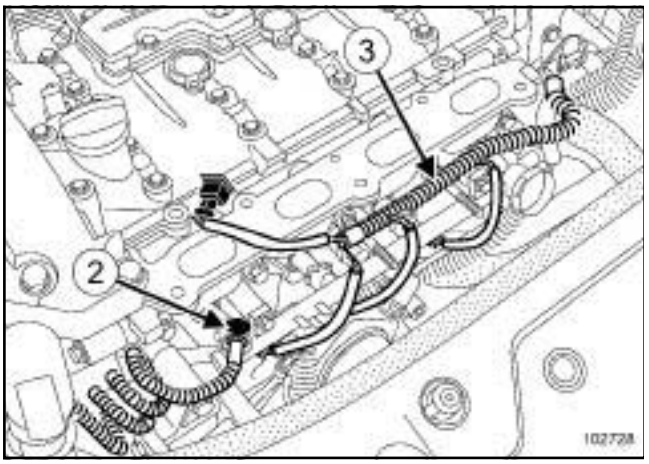

102728

❑ Disconnect:

- the fuel supply pipe (**2**) ,
- the wiring harness (**3**) from the injectors and pinking sensor.

F4R, and 776

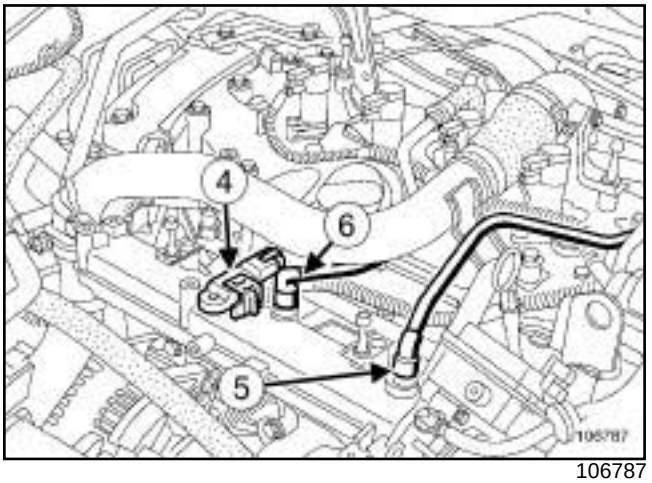

106787

❑ Disconnect:

- the turbocharging pressure sensor connector (**4**) ,
- the vacuum pipe from the brake servo (**5**) ,
- the oil vapour recirculation pipe (**6**) .

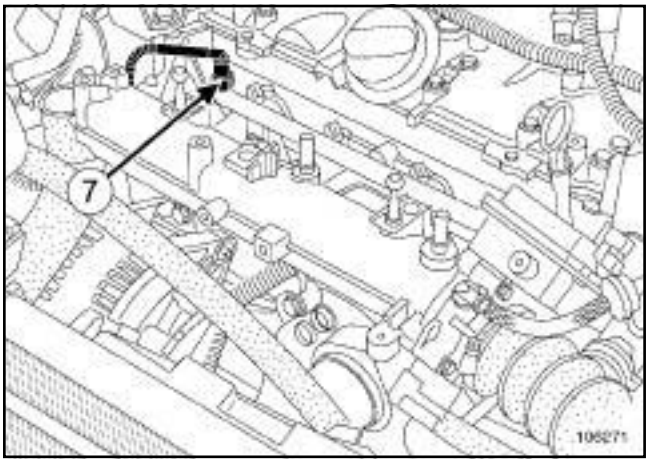

106271

❑ Disconnect the fuel supply pipe (**7**) from the injector rail.

B84 or C84 or G84 or S84, and F4R, and 770 or 771 or 776

❑

IMPORTANT

During this operation:

- refrain from smoking or bringing red hot objects close to the working area,
- expect fuel splashes when disconnecting the supply union,
- protect sensitive areas from fuel outflow.

IMPORTANT

Wear gloves during the operation.

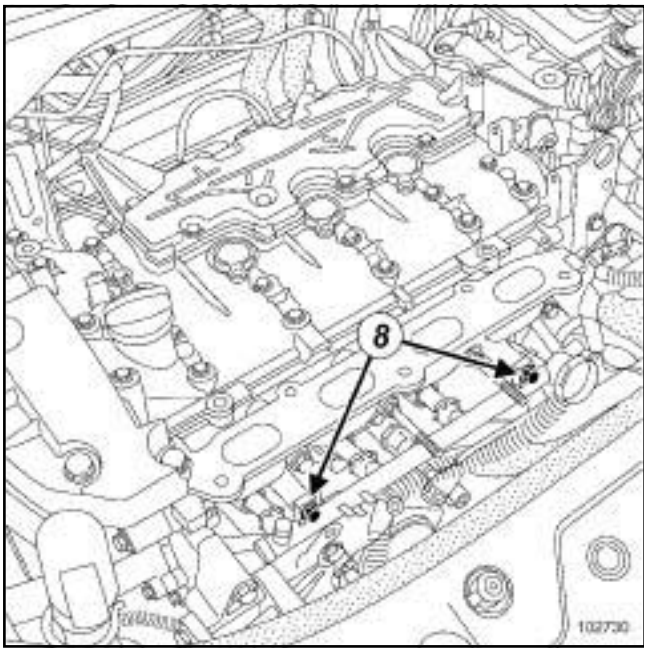

102730

❑ Remove:

- the two injector rail mounting bolts (**8**) ,
- the injector rail, pulling it carefully towards you.

ON THE WORKBENCH

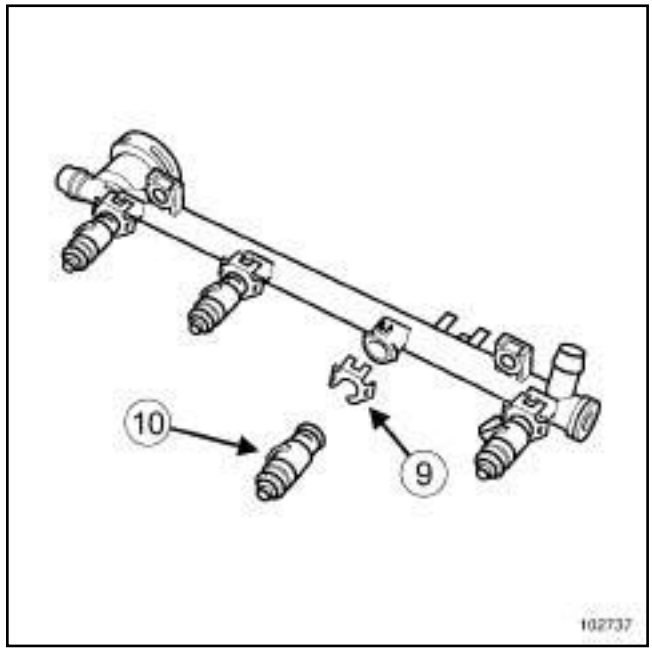

102737

❑ Remove:

- the clips (**9**) from the injectors,
- the injectors (**10**) .

REFITTING

❑ The O-rings and the injector mounting clips must always be replaced with new ones.

❑ Fit the injector rail.

❑ Torque tighten the **injector rail mounting bolts (9 Nm)**.

❑ Proceed in the reverse order to removal.

❑ Connect the battery (see **Battery : Removal - Refitting**) (MR 364, 80A, Battery).

❑ Torque tighten the **battery cover mounting bolts (4 Nm)**

B84 or C84 or G84 or S84, and K4J – B84 or C84 or G84 or S84, and K4M – B84 or C84 or G84 or S84, and F4R, and 770 or 771 or 776

Essential special tooling	
Mot. 1311-01	Fuel pressure test kit.
Mot. 1311-08	Union for measuring fuel pressure.

IMPORTANT

During this operation, it is essential to:

- refrain from smoking or bringing red hot objects close to the working area,
- beware of fuel splashes when disconnecting the union,
- protect sensitive areas from fuel outflow.

IMPORTANT
Wear gloves during the operation.

IMPORTANT
Wear goggles with side protectors for this operation.

K4J, and 730 or 732 – F4R, and 770 or 771 or 776

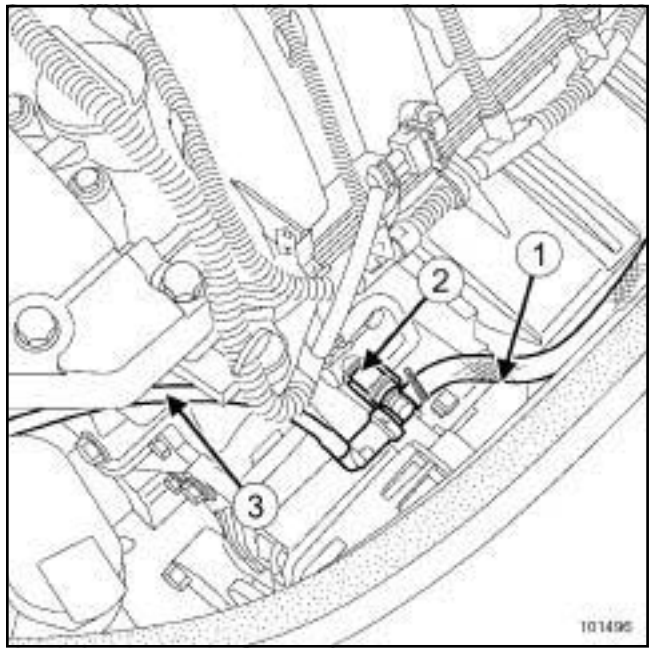

101496

❑ Disconnect the petrol inlet pipe from the injector rail.

B84 or C84 or G84 or S84, and K4J – B84 or C84 or G84 or S84, and K4M – B84 or C84 or G84 or S84, and F4R, and 770 or 771 or 776

K4M, and 760 or 761

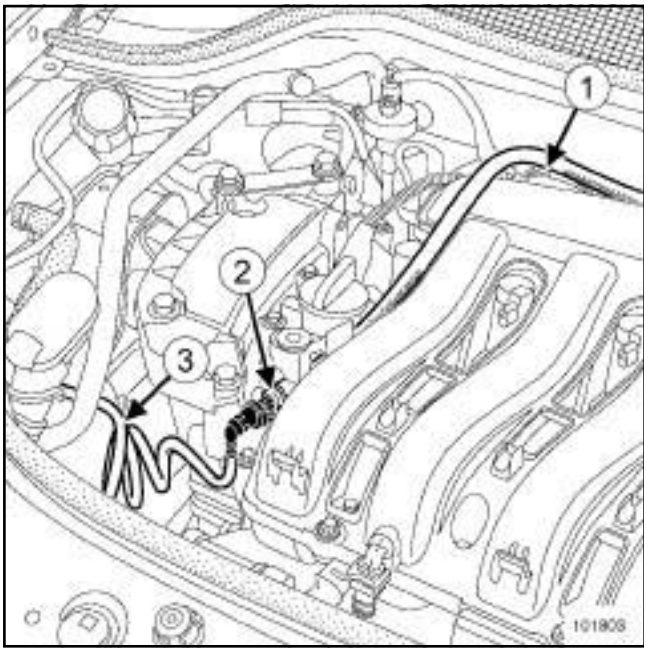

101803

❑ Disconnect the petrol inlet pipe from the injector rail.

❑ Connect:

- the pipe ***(1)*** fitted with the pressure gauge contained in the checking kit **(Mot. 1311-01)**, with the « T » union of the **(Mot. 1311-08)** ***(2)*** ,
- the « T » union to the rail,
- the petrol inlet duct ***(3)*** to the « T » union.

❑ Insert the pipe ***(1)*** into a graduated measuring cylinder (**2000 ml**).

> **IMPORTANT**
> This procedure must be carried out with the ignition off.

❑ Remove the Protection and Switching Unit cover.

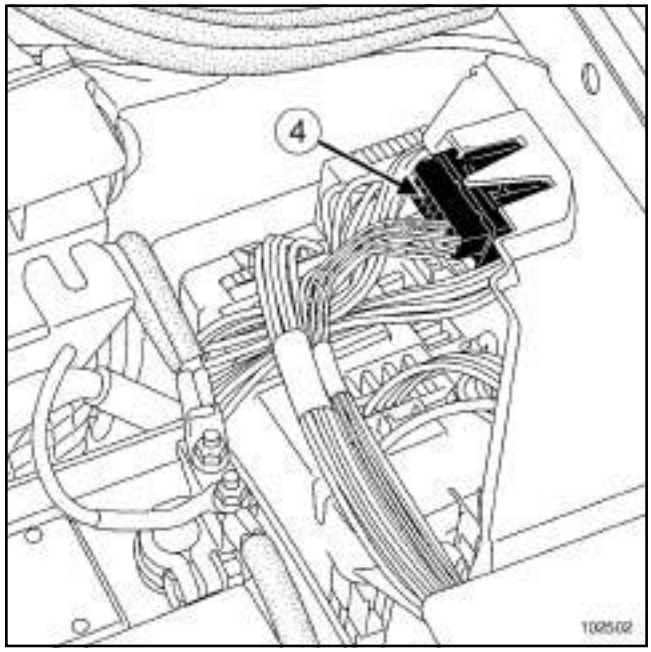

102502

❑ Move the electrical connector (**4**) to one side without disconnecting it.

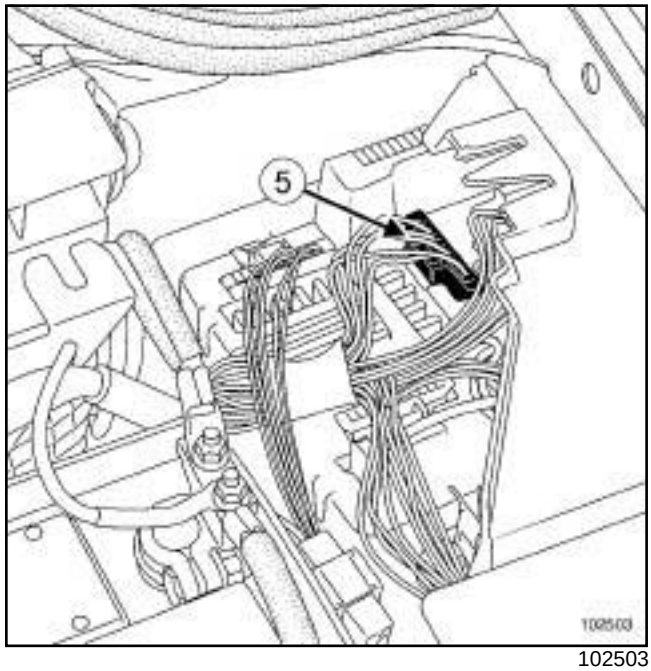

102503

❑ Disconnect the brown connector (**5**) from the protection and switching unit.

B84 or C84 or G84 or S84, and K4J – B84 or C84 or G84 or S84, and K4M – B84 or C84 or G84 or S84, and F4R, and 770 or 771 or 776

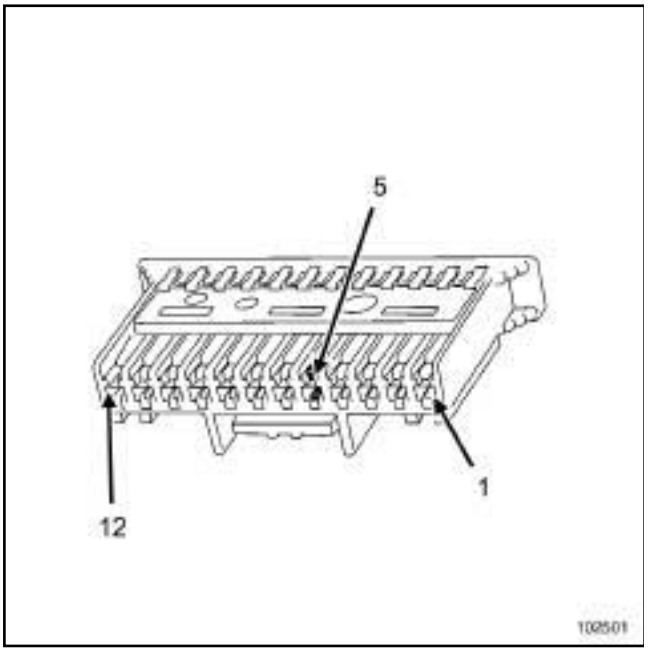

102501

- Connect the terminal (**5**) of the brown connector to the + battery feed.
- The flow reading should be between **80** and **120 l/h**.

K4J – K4M – F4R

Essential special tooling	
Mot. 1311-01	Fuel pressure test kit.
Mot. 1311-08	Union for measuring fuel pressure.

Essential equipment
graduated measuring cylinder

❏

IMPORTANT

During this operation, be sure to:

- refrain from smoking or bringing red hot objects close to the working area,
- be careful of fuel splashes when disconnecting the union.

IMPORTANT

Wear goggles with side protectors for this operation.

IMPORTANT

Wear leaktight gloves (Nitrile type) for this operation.

WARNING

To avoid any corrosion or damage, protect the areas on which fuel is likely to run.

WARNING

To prevent impurities from entering the circuit, plugs must be fitted to the openings of all the fuel circuit components exposed to the open air.

PREPARATION OPERATION FOR CHECK

K4J – F4R

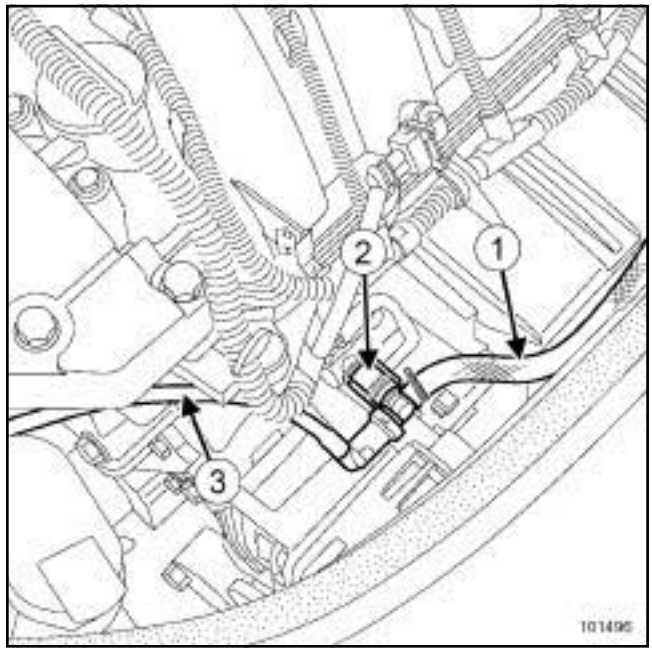

101496

❏ Disconnect the petrol inlet pipe from the injector rail.

K4J – K4M – F4R

K4M

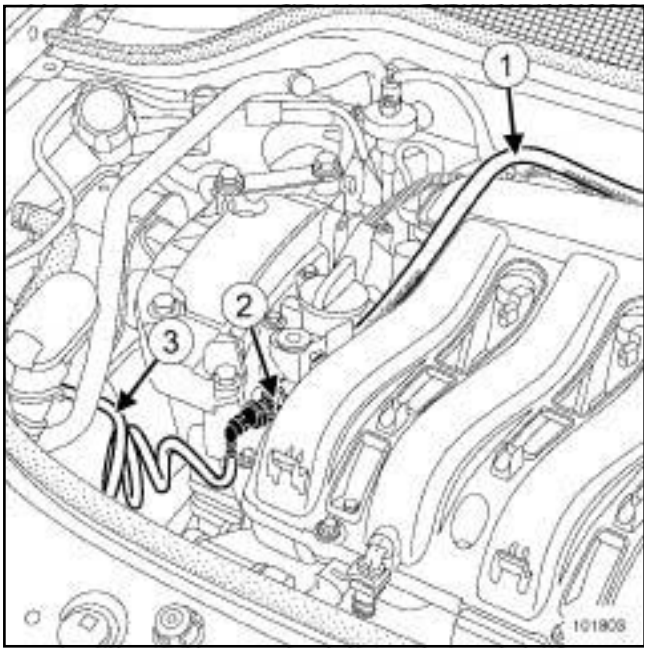

101803

❑ Disconnect the petrol inlet pipe from the injector rail.

❑ Connect:

- the pipe ***(1)*** fitted with a pressure gauge contained in the checking kit **(Mot. 1311-01)**, to the « T » union on the **(Mot. 1311-08)** ***(2)*** ,
- the « T » unionto the rail,
- the petrol inlet duct ***(3)*** to the « T » union.

CHECKING

❑ Immerse the pipe ***(1)*** into a **graduated measuring cylinder (2000 ml)**.

> **IMPORTANT**
> This procedure must be carried out with the ignition off.

❑ Remove the Protection and Switching Unit cover.

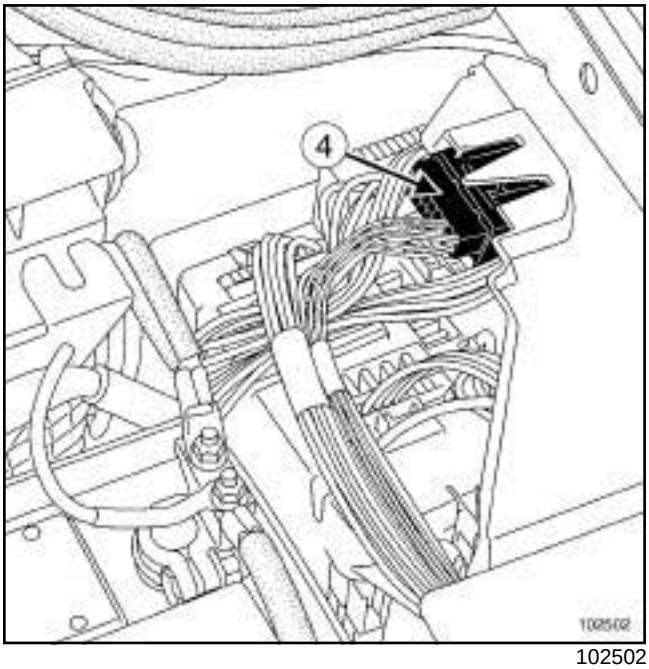

102502

❑ Move the electrical connector (**4**) to one side without disconnecting it.

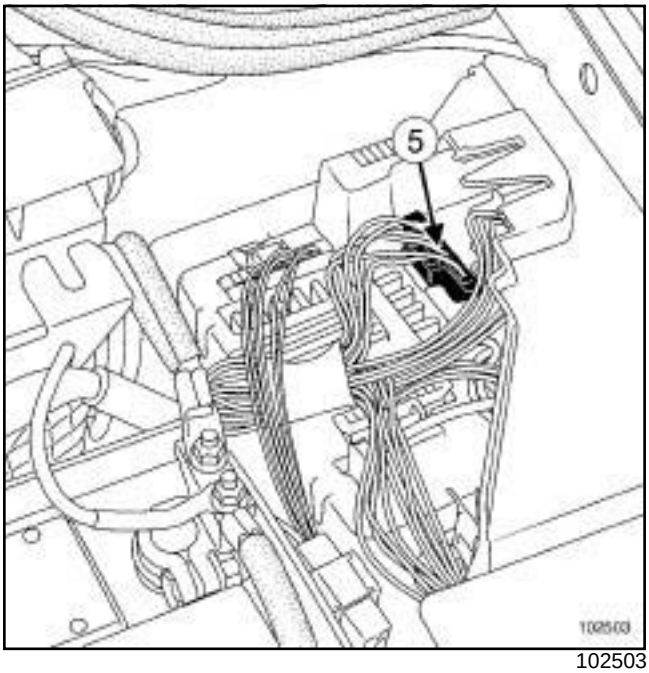

102503

❑ Disconnect the brown connector (**5**) from the protection and switching unit.

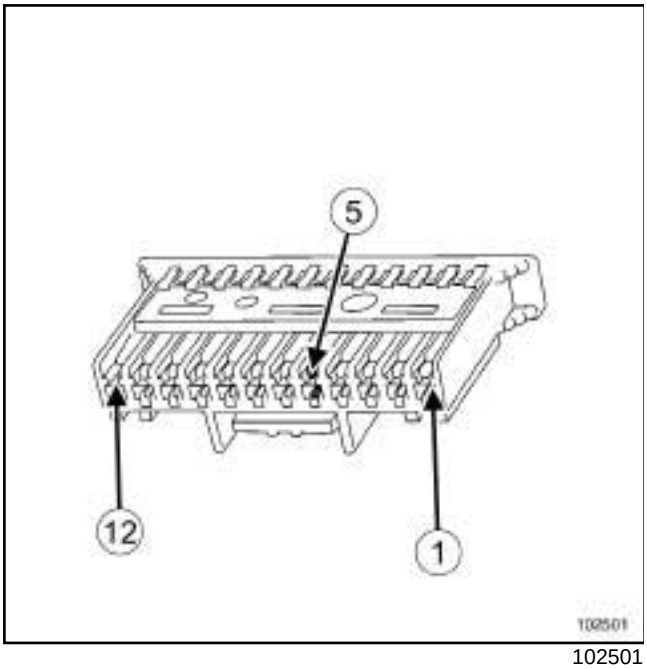

102501

- ❑ Connect the terminal (**5**) of the brown connector to the + battery feed.
- ❑ The flow reading should be between **80 l/h** and **120 l/h**.

FINAL OPERATION

- ❑ Connect the brown connector to the Protection and Switching Unit.
- ❑ Refit the Protection and Switching Unit cover.
- ❑ Disconnect:
  - the petrol inlet duct ***(3)*** to the « T » union.
  - the « T » unionto the rail,
  - the pipe ***(1)*** fitted with a pressure gauge contained in the checking kit **(Mot. 1311-01)**, to the « T » union on the **(Mot. 1311-08)** ***(2)*** ,
- ❑ Connect the fuel inlet pipe on the injector rail.

B84 or C84 or G84 or S84, and K9K, and 722 or 728 or 729

Essential equipment
diagnostic tool

Vehicle type	Engine		Engine speed (rpm)			Smoke opacity	
	Type	Suffix	Idling speed	Maximum unladen	Maximum laden	Homologation value (m^{-1})	Legal maximum (m^{-1})
XM0F XM0T	K9K	722	**805 ± 50**	**5000 ± 150**	**4800 ± 100**	**1.5**	**3**
XM1F		724	**800 ±50**	**4900 ± 150**	**4900 ± 150**		**2**
XM02 XM13		728	**805 ± 50**	**4950 ± 150**	**4800 ± 100**		**3**
XM02		729					

Description	Make - type	Special notes
High pressure pump	**DELPHI**	Pressure from **0** to **1400 bar**
Low pressure pump	**DELPHI**	Built into the high pressure pump
Injection computer	**DELPHI**	112-track computer (A 32, B 48, C 32)
Diesel fuel rail pressure sensor	**DELPHI**	Built into the rail Resistance not measurable Feed voltage: + **5 V** 3-track connector: - 1: signal - 2: diesel fuel rail pressure sensor earth - 3: + **5 V** feed
Injectors	**DELPHI / MNS HP**	Solenoid injector Maximum pressure **1600 bar** Resistance not measurable Feed voltage: + **14 V** 2-track connector: - 1: control + injector - 2: control - injector

B84 or C84 or G84 or S84, and K9K, and 722 or 728 or 729

Description	Make - type	Special notes
Diesel fuel flow actuator	**DELPHI**	Located on the high pressure pump Resistance: **5.3 Ω** ± **0.5** at **20°C** Feed voltage: + **5 V** 2-track connector: - 1: + battery feed via protection and switching unit - 2: actuator control
Engine speed and position sensor	**MGI**	Variable reluctance sensor Resistance: **760 Ω** (K9K 722) Resistance: **680 Ω** (K9K 724, 728, 729) 2-track connector - A: + signal - B: - signal
Pre-postheating unit	**NAGARES BED 7-12**	Pre-postheating function managed by the computer 9-track connector - 1: heater plug no. 3 supply - 2: heater plug no. 4 supply - 3: + battery supply - 6: heater plug no. 1 supply - 7: heater plug no. 2 supply - 8: injection computer control - 9: fault finding
Heater plugs	**CHAMPION ou BERU**	Resistance: **0.6 Ω**

B84 or C84 or G84 or S84, and K9K, and 722 or 728 or 729

Description	Make - type	Special notes
Accelerator pedal potentiometer	**CTS**	Dual gang potentiometer Resistance - gang 1: tracks 3 and 5: **1700 ± 900 Ω** - gang 2: tracks 2 and 6: **3875 ± 1025 Ω** 6-track connector: - 1: gang 2 signal - 2: + **5 V** feed, gang 2 - 3: + **5 V** feed, gang 1 - 4: track 1 signal - 5: gang 1 earth - 6: gang 2 earth
Cylinder reference sensor	**SAGEM**	Hall effect sensor 3-track connector: - 1: cylinder reference sensor earth - 2: signal - 3: + battery feed via protection and switching unit
Diesel temperature sensor	**DELPHI**	Located on the high pressure pump Negative temperature coefficient thermistor Resistance: **2.2 kΩ** at **25°C** 2-track connector: - 1: signal - 2: diesel fuel temperature sensor earth
Accelerometer	**SAGEM**	Resistance not measurable 2-track connector: - 1: signal - 2: accelerometer earth

B84 or C84 or G84 or S84, and K9K, and 722 or 728 or 729

Description	Make - type	Special notes
Engine coolant temperature sensor	**ELTH**	Negative temperature coefficient thermistor Resistance: - **75780** ± **7000 Ω** at **- 40°C** - **12460** ± **1128 Ω** at **- 10°C** - **2252** ± **112 Ω** at **25°C** - **811** ± **38 Ω** at **50°C** - **282** ± **8 Ω** at **80°C** - **115** ± **3 Ω** at **110°C** - **88** ± **2 Ω** at **120°C** 4-track connector: - 3: signal - 4: engine coolant temperature sensor earth
Turbocharging air temperature and pressure sensor	**BOSCH / LDF6T 20-250**	Pressure sensor with a negative temperature coefficient thermistor Feed voltage: + **5 V** Resistance: - **20376** ± **1110.5 Ω** at **- 25°C** - **15614** ± **829 Ω** at **- 20°C** - **9426** ± **475 Ω** at **- 10°C** - **5887** ± **281.5 Ω** at **0°C** - **3791** ± **172.5 Ω** at **10°C** - **2511** ± **109 Ω** at **20°C** - **1715.5** ± **71 Ω** at **30°C** - **1200** ± **47 Ω** at **40°C** - **851** ± **32 Ω** at **50°C** - **612** ± **22 Ω** at **60°C** - **446** ± **15 Ω** at **70°C** - **330** ± **11 Ω** at **80°C** 4-track connector: - 1: earth - 2: air temperature sensor signal - 3: + **5 V** feed - 4: pressure sensor signal
Exhaust gas recirculation solenoid valve (K9K 722, 728 and 729)	**PIERBURG**	Supply voltage: + **13.5 V** Resistance: tracks 1 and 5: **8** ± **0.5 Ω** at **20°C**

B84 or C84 or G84 or S84, and K9K, and 722 or 728 or 729

Description	Make - type	Special notes
Exhaust gas recirculation solenoid valve (K9K 724)	**PIERBURG**	Supply voltage: **13.5 V** Resistance: tracks 2 and 6: **2.3 Ω** at **20°C**
Exhaust gas recirculation solenoid valve position potentiometer (K9K 724)	**PIERBURG**	Built into the exhaust gas recirculation solenoid valve Feed voltage: + **5 V** 6-track connector: - 1: potentiometer supply - 2: solenoid valve supply - 3: potentiometer earth - 4: Not used - 5: potentiometer signal - 6: solenoid valve earth
Exhaust gas recirculation solenoid valve position potentiometer (K9K 722 728 and 729)	**PIERBURG**	Built into the exhaust gas recirculation solenoid valve Feed voltage: + **5 V** Resistance: - tracks 2 and 4: **4** ± **1.6 kΩ** at **20°C** 6-track connector: - 1: solenoid valve + battery feed via protection and switching unit - 2: + **5 V** potentiometer supply - 3: Not used - 4: potentiometer earth - 5: solenoid valve earth - 6: potentiometer signal
Refrigerant pressure sensor	**TEXAS INSTRUMENTS**	Feed voltage: + **5 V** 3-track connector: - A: earth - B: + **5 V** feed - C: signal

B84 or C84 or G84 or S84, and K9K, and 722 or 728 or 729

Description	Make - type	Special notes
Fault finding	-	**diagnostic tool** : CLIP only
Turbocharging pressure regulation solenoid valve (K9K 724, 728 and 729)	**BITRON**	Proportional solenoid valve Supply voltage: **13.5 V** Resistance: **16.5 Ω ± 1.6** at **23°C** 2-track connector: - 1: signal - 2: feed

B84 or C84 or G84 or S84, and K9K, and 732

Essential equipment
diagnostic tool

Vehicle type	Engine		Engine speed (rpm)			Smoke opacity		Emissions standard
	Type	Suffix	Idling speed	Maximum unladen	Maximum laden	Homologation value	Legal maximum	
X84	K9K	732	**800 ± 50**	**5000 ± 150**	**5000 ± 150**	**1.5 m^{-1}**	**2 m^{-1}**	Euro IV

Description	Make - type	Special notes
High pressure pump	**SIEMENS VDO**	Pressure from **0** to **1600 bar**
Low pressure pump	**SIEMENS VDO**	Built into the high pressure pump
Injection computer	**SIEMENS VDO**	128-track computer (A 32, B 48, C 48)
Diesel fuel rail pressure sensor	**SIEMENS VDO**	Built into the rail Resistance not measurable Feed voltage: + **5 V** 3-track connector: - 1: signal - 2: diesel fuel rail pressure sensor earth - 3: supply +
Injectors	**SIEMENS VDO**	6-hole piezoelectric injector Resistance not measurable Supply voltage: **150 V** 2-track connector: - 1: feed - 2: earth
Flow regulation solenoid valve	**SIEMENS VDO**	Integrated in the high pressure pump Cannot be removed Supply voltage + **12 V**
Pressure regulation solenoid valve	**SIEMENS VDO**	Built into the high pressure pump Cannot be removed Supply voltage + **12 V**

B84 or C84 or G84 or S84, and K9K, and 732

Description	Make - type	Special notes
Engine speed and position sensor	**SIEMENS VDO**	Variable reluctance sensor Resistance: **680 Ω** ± 6.8 at 20°C 2-track connector - 1: + signal - 2: - signal
Pre-postheating unit	**NAGARES**	With pre-postheating function controlled by the injection computer 8-track connector - 1: heater plug no. 3 supply - 2: heater plug no. 1 supply - 3: fault finding - 4: + battery supply - 6: heater plug no. 4 supply - 7: heater plug no. 2 supply - 8: injection computer control
Heater plugs	**CHAMPION ou BERU**	Resistance: **0.6 Ω**
Accelerator pedal potentiometer	**CTS**	Dual gang potentiometer Resistance - gang 1: tracks 3 and 5: **1700 Ω** ± **900** - gang 2: tracks 2 and 6: **3875 Ω** ± **1025** 6-track connector: - 1: gang 2 signal - 2: + **5 V** feed, gang 2 - 3: + **5 V** feed, gang 1 - 4: track 1 signal - 5: gang 1 earth - 6: gang 2 earth
Cylinder reference sensor	**JCAE**	Hall effect sensor 3-track connector: - 1: earth - 2: signal - 3: feed

B84 or C84 or G84 or S84, and K9K, and 732

Description	Make - type	Special notes
Diesel temperature sensor	**ELTH**	Located on the diesel return rail on the high pressure pump outlet 2-track connector: - 1: signal - 2: earth
Atmospheric pressure sensor	**SIEMENS VDO**	Built into the computer
Air temperature sensor	**SIEMENS VDO**	Integrated in flowmeter Negative temperature coefficient thermistor Resistance: - **44373 Ω** ± **3118** at **- 40°C** - **15141 Ω** ± **871** at **- 20°C** - **9202 Ω** ± **486** at **10°C** - **5774 Ω** ± **276** at **0°C** - **3714 Ω** ± **161** at **10°C** - **2448 Ω** ± **95** at **20°C** - **1671 Ω** ± **58** at **30°C** - **1150 Ω** ± **36** at **40°C** - **817 Ω** ± **22** at **50°C** - **583 Ω** ± **14** at **60°C** - **316 Ω** ± **6** at **80°C** - **183 Ω** ± **2** at **100°C**
Turbocharging pressure sensor	**BOSCH / LDF6 20-300**	Feed voltage: + **5 V** 3-track connector: - 1: feed - 2: earth - 3: signal
Damper valve	**JCAE**	Solenoid valve position potentiometer built into the damper valve Solenoid valve supply voltage: **+ 13.5V** Potentiometer supply voltage: **+ 5V**

B84 or C84 or G84 or S84, and K9K, and 732

Description	Make - type	Special notes
Engine coolant temperature sensor	**ELTH**	Negative temperature coefficient thermistor Resistance: - **75780 Ω** ± **7000** at **- 40°C** - **12460 Ω** ± **1128** at **- 10°C** - **2252 Ω** ± **112** at **25°C** - **811 Ω** ± **38** at **50°C** - **282 Ω** ± **8** at **80°C** - **115 Ω** ± **3** at **110°C** - **88 Ω** ± **2** at **120°C** 4-track connector: - 1: Not used - 2: engine coolant temperature sensor signal - 3: engine coolant temperature sensor earth - 4: Not used
Exhaust gas recirculation solenoid valve	**PIERBURG**	Feed voltage: + **13.5 V** Resistance: tracks 2 and 6: **2.3 Ω**
Exhaust gas recirculation solenoid valve position potentiometer	**PIERBURG**	Integrated in the exhaust gas recirculation solenoid valve Feed voltage: + **5 V** 6-track connector: - 1: potentiometer supply - 2: solenoid valve supply - 3: potentiometer earth - 4: Not used - 5: potentiometer signal - 6: solenoid valve earth
Refrigerant pressure sensor	**TEXAS INSTRUMENT** **BIRTON**	Feed voltage: + **5 V** 3-track connector: - A: earth - B: feed - C: signal

B84 or C84 or G84 or S84, and K9K, and 732

Description	Make - type	Special notes
Water in diesel fuel sensor	**PRESSAC**	Located on the diesel filter 3-track connector: - 1: feed - 2: signal - 3: earth
Air inlet flowmeter	**SIEMENS VDO**	Air flowmeter with integrated air temperature sensor 6-track connector: - 1: air temperature signal - 2: earth - 3: Not used - 4: **+ 12 V** supply - 5: supply: **+ 5 V** - 6: air flow signal
Turbocharging pressure regulation solenoid valve	**BIRTON**	Proportional solenoid valve supply voltage + **12 V** 2-track connector: - 1: computer output - 2: feed
Fault finding	**-**	**diagnostic tool** : CLIP only

F9Q or K9K or M9R

I - RISKS RELATING TO CONTAMINATION

The high-pressure direct injection system is highly sensitive to contamination. The risks caused by contamination are:

- damage to or destruction of the high pressure injection system,
- a component seizing,
- a component not being properly sealed.

All After-Sales operations must be performed under very clean conditions. Having carried out an operation in good conditions means that no impurities (particles a few microns in size) have penetrated the system during dismantling.

The cleanliness principle must be applied from the filter to the injectors.

What are the sources of contamination?

- metal or plastic swarf,
- paint,
- fibres:
  - cardboard,
  - brushes,
  - paper,
  - clothing,
  - cloth,
- foreign bodies such as hair,
- ambient air,
- etc.

WARNING
Do not clean the engine with a high pressure cleaner to prevent damaging the connections.

1 - Cleaning cloths

Use lint-free cleaning cloths (see **Vehicle: Parts and ingredients for the repairwork**) (04B, Consumables - Products).

It is prohibited to use cloths or ordinary paper towels: these produce lint and lose fibres, which then contaminate the fuel circuit.

Each cloth must only be used once.

2 - Blanking plugs

The blanking plugs are used to cap the fuel circuit once it is opened and to therefore prevent contaminants from entering.

A set of blanking plugs should be used once only and used plugs must be discarded after use: once used, the plugs are soiled and cleaning them is not sufficient to make them reusable.

Unused plugs must also be discarded and must not be used when carrying out work on an injection system.

Part number for set of blanking plugs: (see **Vehicle: Parts and ingredients for the repairwork**) (04B, Consumables - Products).

Note:
There is no specific set of blanking plugs for S9U and S9W engines. In order to comply with the cleanliness recommendations, use plugs that are compatible with the blanking plug sets for F9Q, G9U, G9T or ZD3 engines.

3 - Protective bags

Use hermetically-resealable plastic bags, using adhesive tape, for example, to store components which will be refitted and reused. Stored parts will therefore be less subject to the risk of contamination.

These are single-use bags: after use they must be discarded.

4 - Cleaning products

Two cleaning products can be used:

- an injector cleaner (see **Vehicle: Parts and ingredients for the repairwork**) (04B, Consumables - Products),
- an aerosol spray brake cleaner (see **Vehicle: Parts and ingredients for the repairwork**) (04B, Consumables - Products).

To use the injector cleaner, be sure to have a clean brush in good condition (the brush must not lose any bristles) as well as a clean container which has no impurities in it.

Note:
Use a new injector cleaner each time work is carried out (a used cleaning agent will contain impurities).

F9Q or K9K or M9R

II - ADVICE TO BE FOLLOWED BEFORE ANY OPERATION

1) Carry out the work in a clean working area and take care to protect removed components from dust using plastic bags which are hermetically-resealable, for example.

2) Always order the following from the Parts Department before carrying out work:

- **a new set of blanking plugs**, specific to the engine,
- enough lint-free **cleaning cloths**.
- one of the two **cleaning products** for fuel pipe unions,
- **the parts that are always to be replaced** after each removal operation, mentioned in the operational procedures specific to the vehicle (see related Workshop Repair Manual).

3) Wear safety goggles fitted with side shields to prevent the cleaning product from splashing the eyes.

4) Wear leaktight protective gloves (Nitrile type) to avoid prolonged contact with the skin.

> Note:
>
> When using leather protective gloves, wear a pair of leaktight protective gloves (Nitrile type) over the top.

5) Before carrying out work on the injection system, use plastic bags or clean rags, for example, to protect:

- the accessories and timing belts,
- the electrical accessories (starter, alternator, power-assisted steering pump, sensors and electrical connectors),
- the flywheel face.

III - INSTRUCTIONS TO BE FOLLOWED DURING THE OPERATION

Wash your hands before and while carrying out the work.

Replace leaktight protective gloves (Nitrile type) when they are soiled or damaged.

All components removed from the injection system must be stored in a hermetically sealed plastic bag once they have been capped.

Reseal the bag hermetically, for example using adhesive tape, even if the bag must be opened shortly afterwards: ambient air can be a source of impurities.

After opening the fuel circuit, the use of brushes, cleaning agents, air blow guns, rifle-type brushes or standard cloths is strictly prohibited: these items are likely to allow impurities to enter the system.

When replacing a component with a new one or when refitting it after storing it in a plastic bag, do not unpack it until it is time to fit it on the vehicle.

IV - CLEANING

There are currently two procedures for cleaning the fuel circuit before opening it in order to carry out work in the workshop.

These procedures enable the fuel circuit to be cleaned to prevent contamination from entering: they both have the same end result and neither is preferred over the other.

1 - Cleaning using injector cleaner

Clear the access to the unions that need opening, following the work procedures specific to the vehicle (see the relevant Workshop Repair Manual).

Protect sections which are sensitive to fuel leaks.

Pour the injector cleaning agent into a container which is free from impurities.

> **IMPORTANT**
>
> Wear leaktight gloves (Nitrile type) for this operation.

Dip a clean brush, which is not shedding bristles, into the container of injector cleaning agent.

> **IMPORTANT**
>
> Wear goggles with side protectors for this operation.

Clean the unions carefully using the brush and the injector cleaning agent.

Blast the components that have been cleaned with compressed air (tools, workbench, and also parts, unions and around the injection system). Check that no bristles from the brush have come away and that the area is clean.

Wipe the sections that were cleaned with fresh cleaning cloths.

Open the circuit at the unions and immediately fit the relevant blanking plugs.

WARNING

To prevent impurities from entering, once the fuel circuit is opened, it must not be blasted with compressed air. Use cleaning cloths only, if necessary.

2 - Using the brake cleaner

Clear the access to the unions that need opening, following the work procedures specific to the vehicle (see the relevant Workshop Repair Manual).

Protect sections which are sensitive to fuel leaks.

IMPORTANT

Wear leaktight gloves (Nitrile type) for this operation.

IMPORTANT

Wear goggles with side protectors for this operation.

Spray the brake cleaner onto the unions to be opened.

Clean the unions carefully using fresh cleaning cloths.

Blast the components that have been cleaned with compressed air (tools, workbench, and also parts, unions and around the injection system). Check that no bristles from the brush have come away and that the area is clean.

Open the circuit at the unions and immediately fit the relevant blanking plugs.

WARNING

To prevent impurities from entering, once the fuel circuit is opened, it must not be blasted with compressed air. Use cleaning cloths only, if necessary.

F9Q or K9K or M9R

F9Q

F9Q or K9K or M9R

Set of plugs:

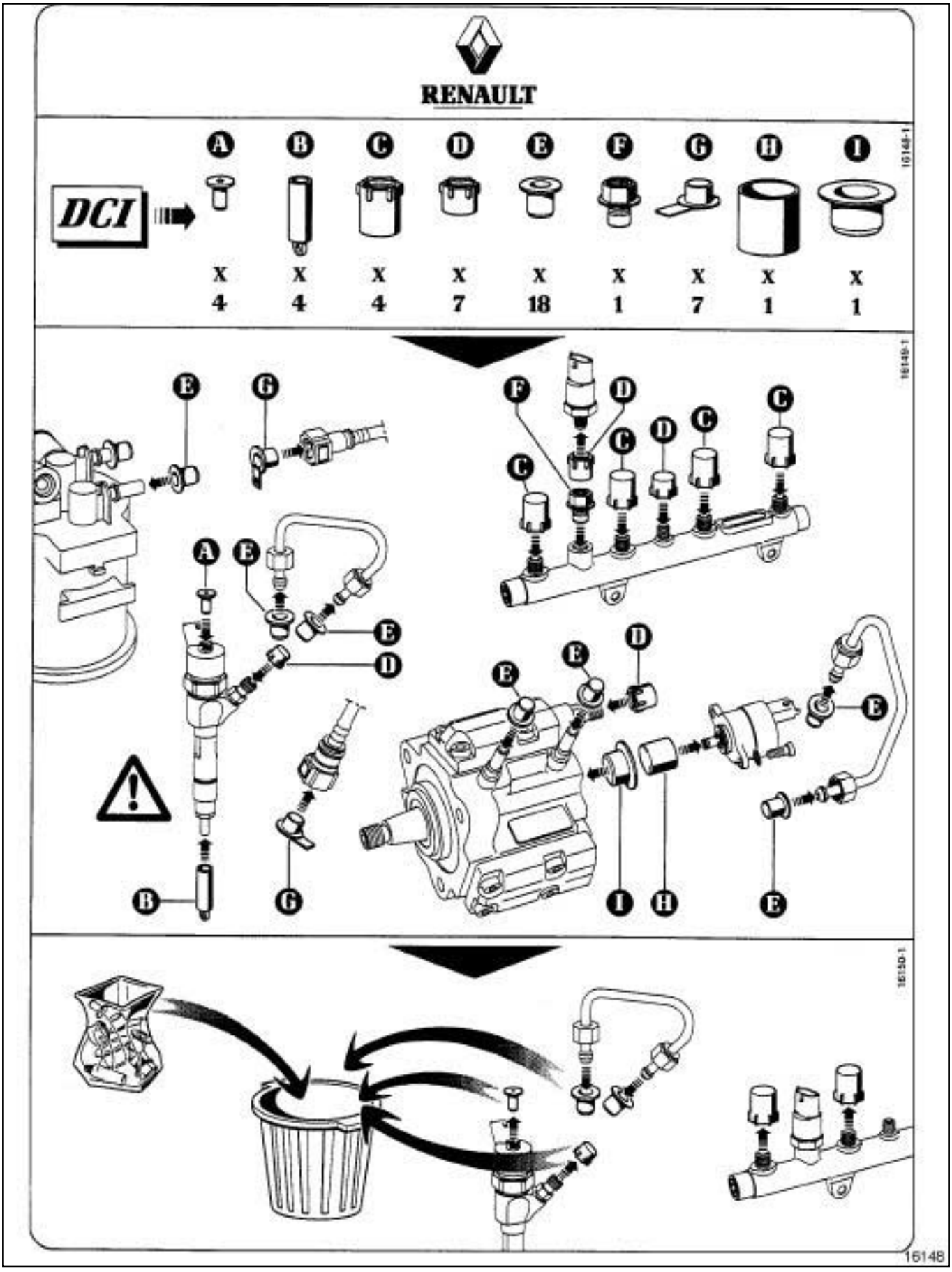

F9Q or K9K or M9R

16148

F9Q or K9K or M9R

K9K

F9Q or K9K or M9R

Set of plugs for DELPHI injection:

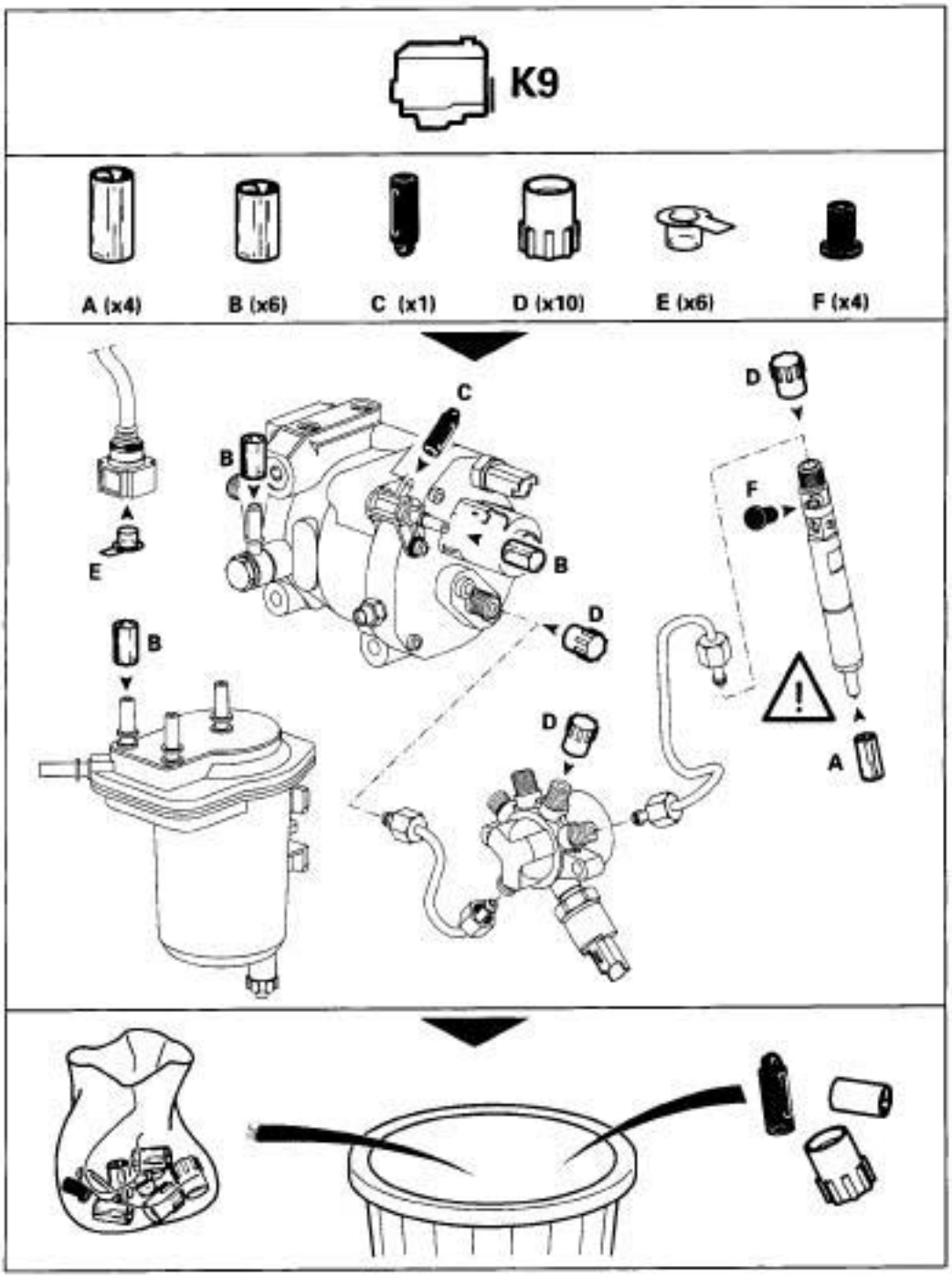

F9Q or K9K or M9R

20977

F9Q or K9K or M9R

Set of plugs for SIEMENS injection:

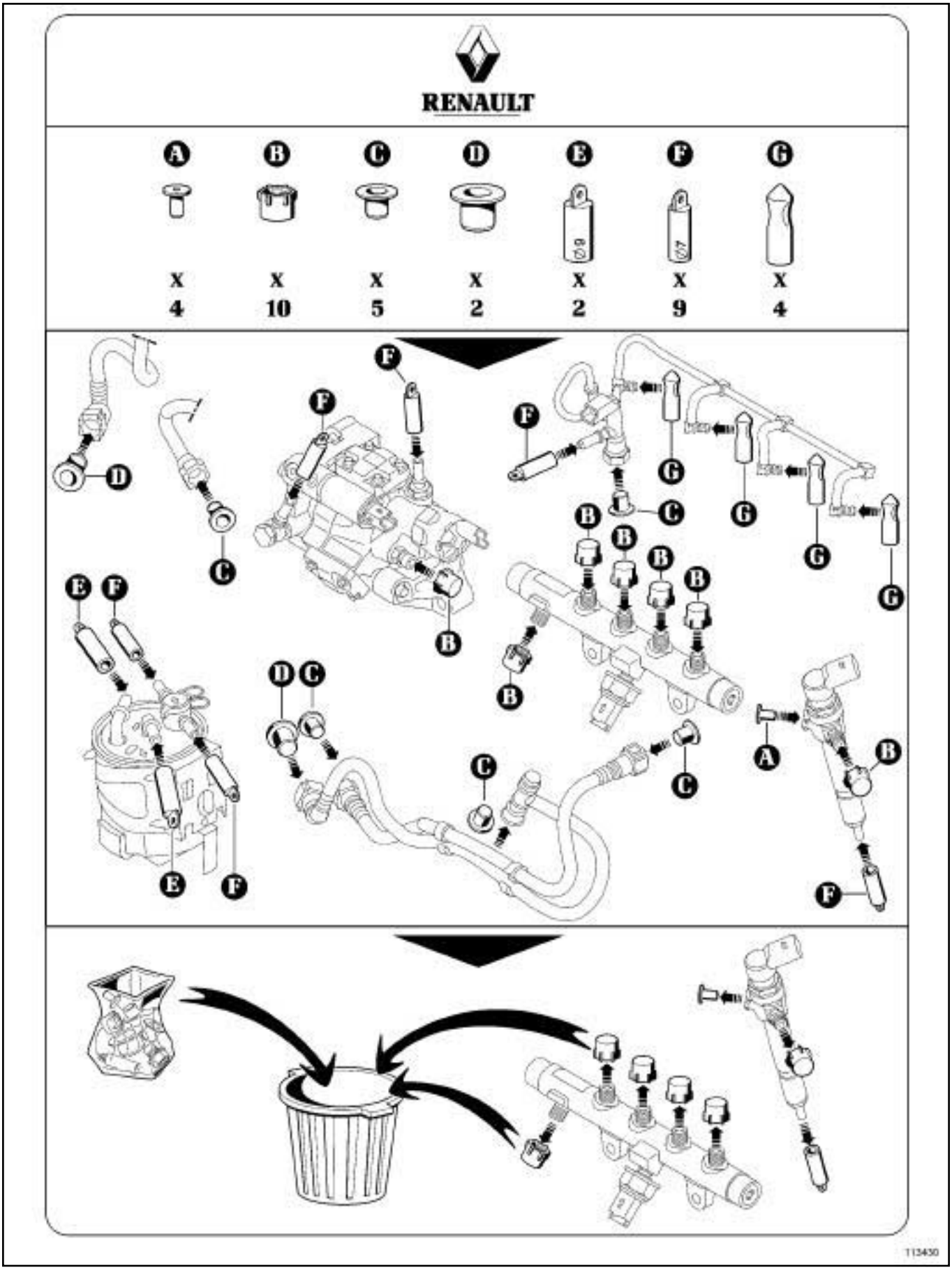

F9Q or K9K or M9R

113430

F9Q or K9K or M9R

M9R

F9Q or K9K or M9R

Set of plugs:

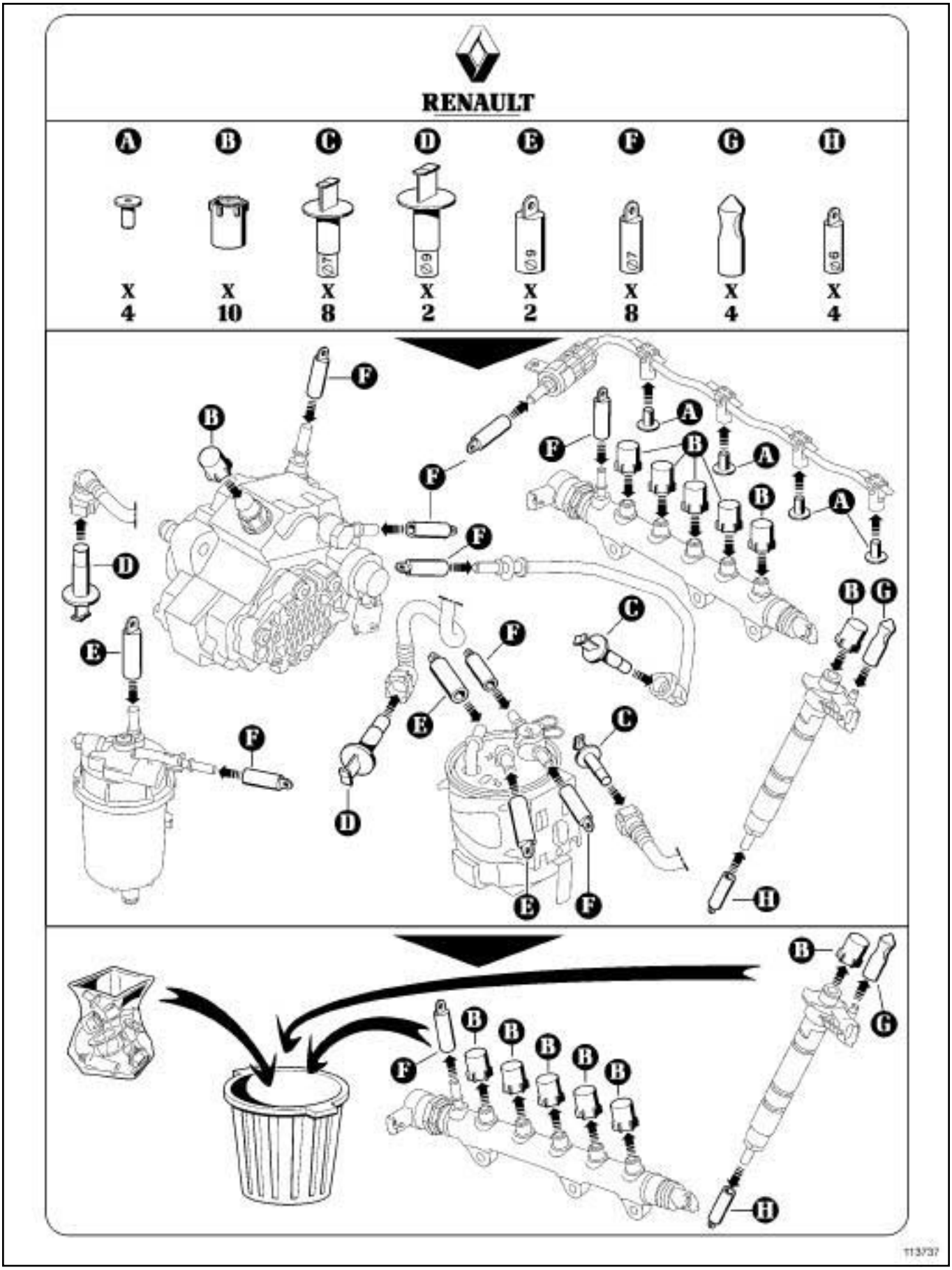

F9Q or K9K or M9R

113737

B84 or C84 or G84 or S84, and K9K, and 722

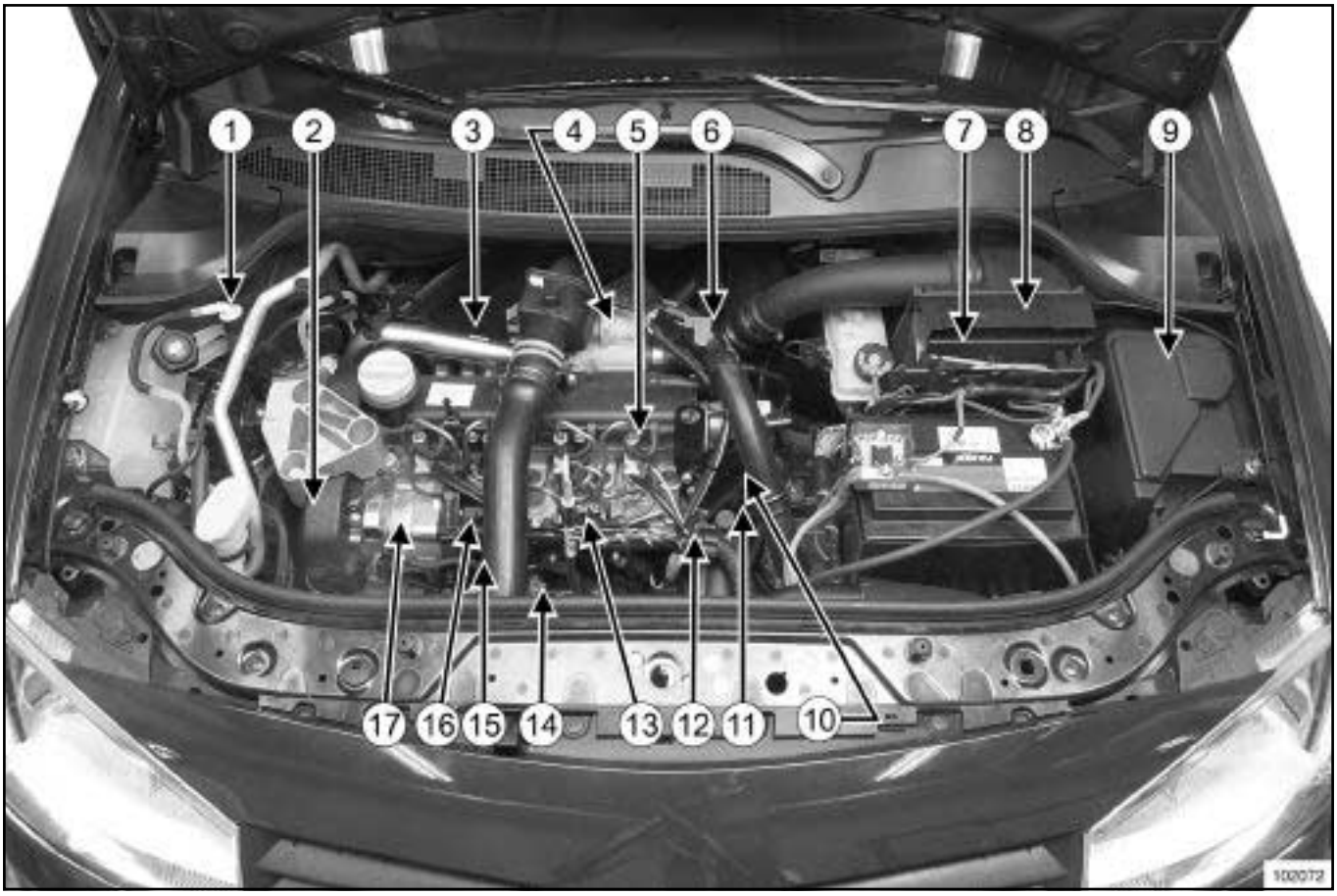

102072

(**1**) Priming pump
(**2**) Cylinder reference sensor
(**3**) Turbocharger
(**4**) Exhaust gas recirculation solenoid valve
(**5**) Injector
(**6**) Turbocharging air temperature and pressure sensor
(**7**) Injection computer
(**8**) Air filter unit
(**9**) Protection and Switching Unit
(**10**) Coolant temperature sensor
(**11**) Engine speed and position sensor
(**12**) Rail pressure sensor
(**13**) Spherical injection rail
(**14**) Accelerometer
(**15**) Diesel temperature sensor
(**16**) Diesel flow actuator
(**17**) High pressure pump

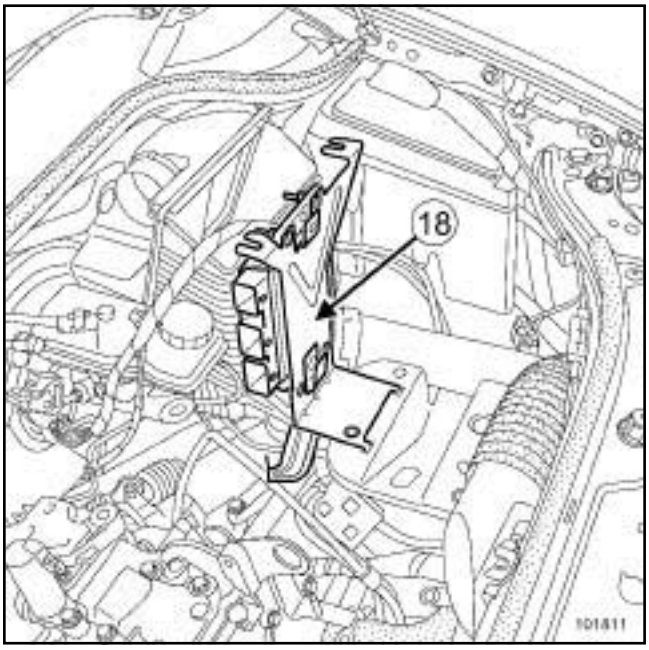

101811

(**18**) Injection computer

B84 or C84 or G84 or S84, and K9K, and 722

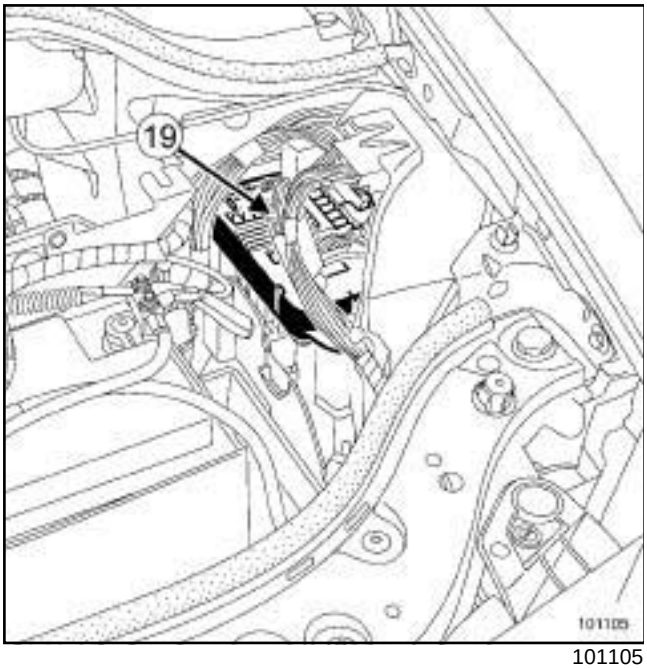

101105

(**19**) Protection and Switching Unit

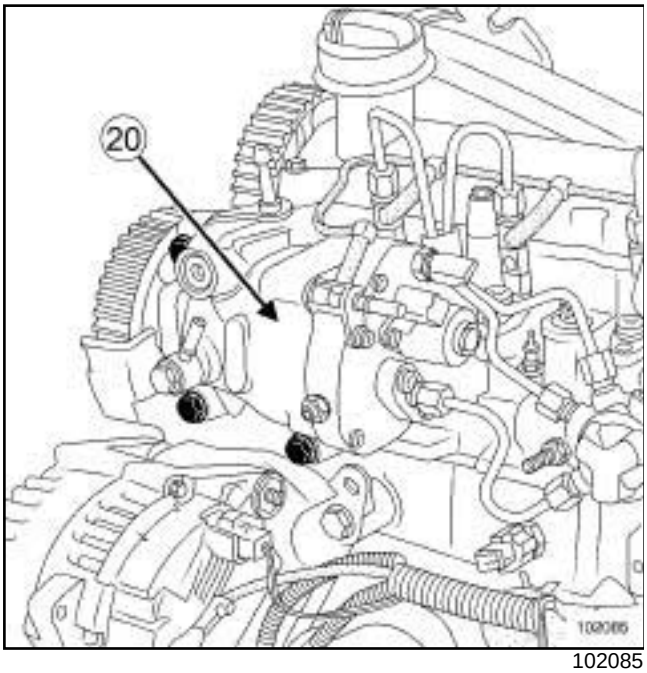

102085

(**20**) High pressure pump

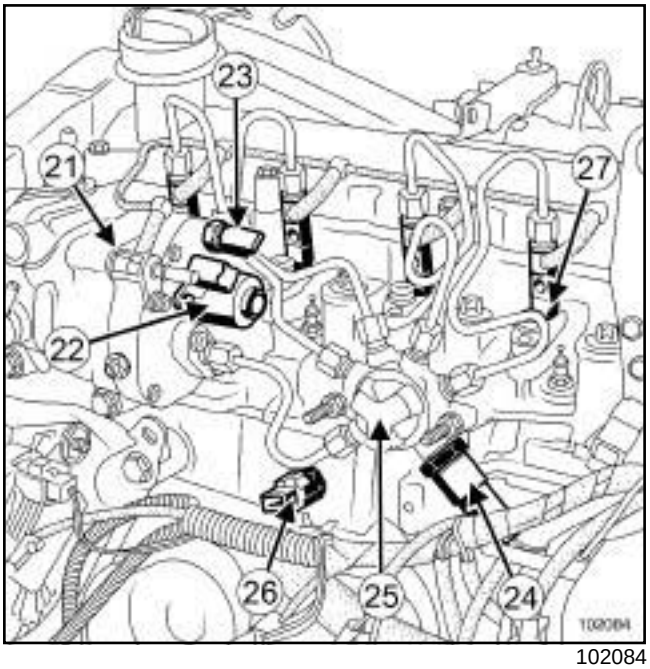

102084

(**21**) Venturi
(**22**) Flow actuator
(**23**) Diesel temperature sensor
(**24**) Rail pressure sensor
(**25**) Spherical injection rail
(**26**) Accelerometer
(**27**) Injector

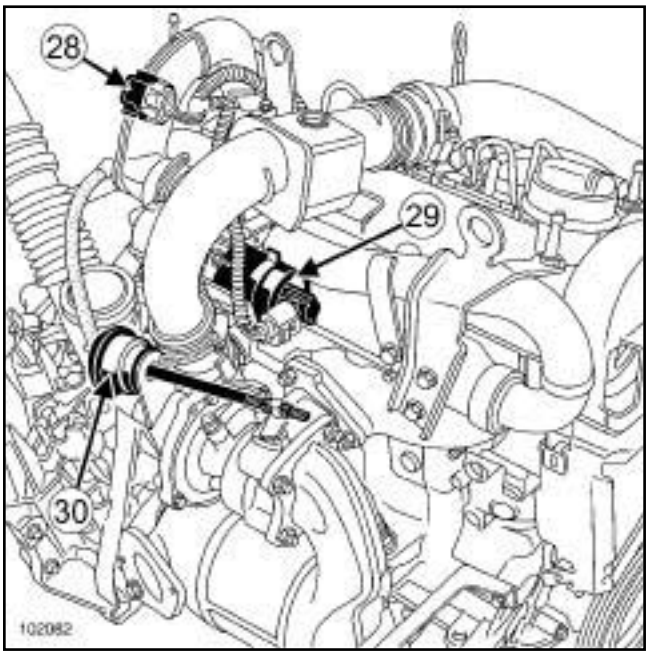

102082

B84 or C84 or G84 or S84, and K9K, and 722

(**28**) Turbocharging air temperature and pressure sensor

(**29**) Exhaust gas recirculation solenoid valve

(**30**) Wastegate valve

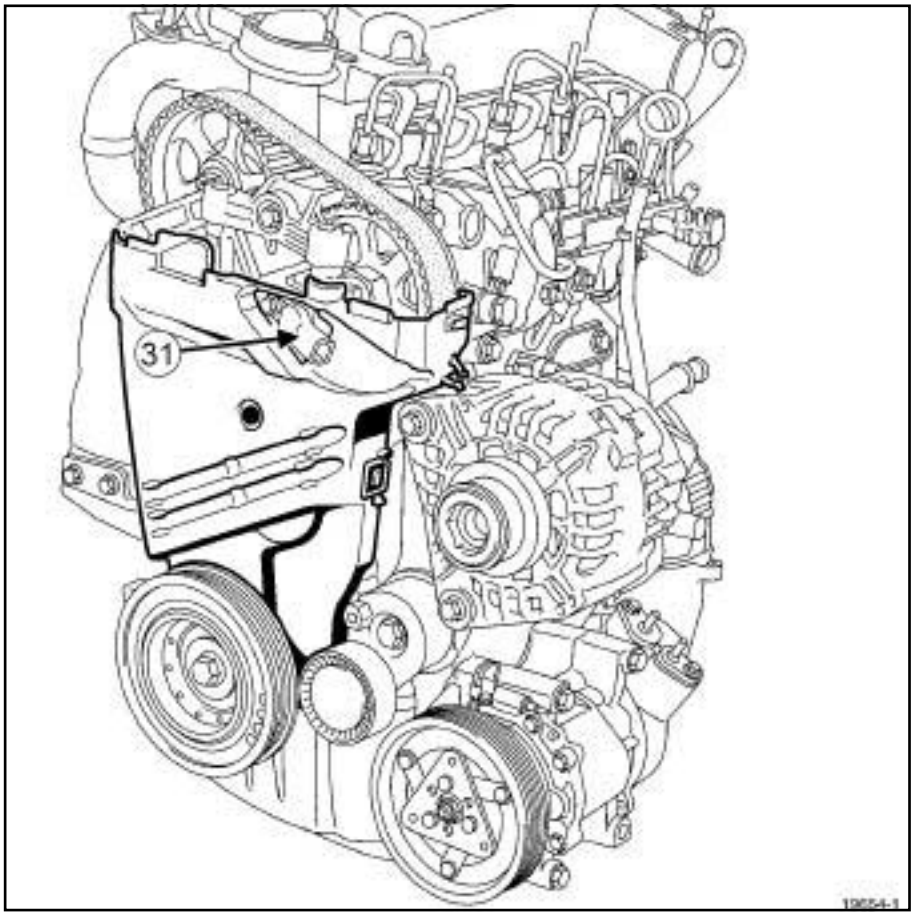

19654-1

(**31**) Cylinder reference sensor

B84 or C84 or G84 or S84, and K9K, and 722

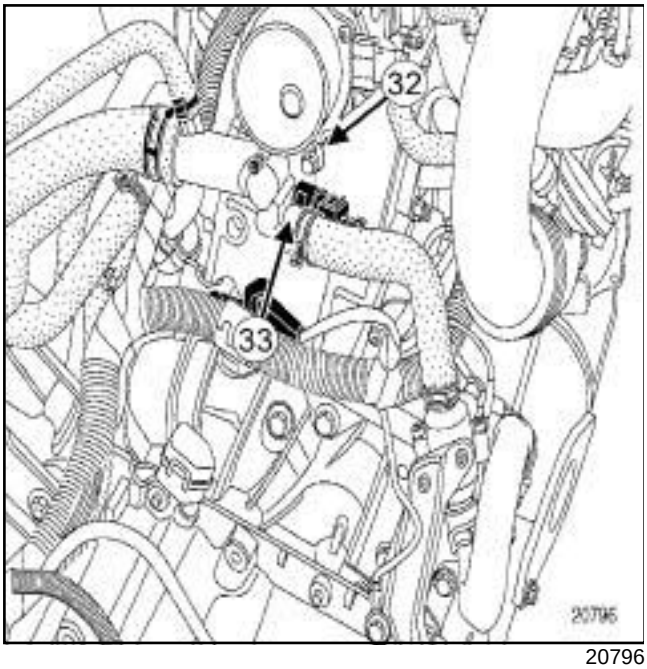

20796

(**32**) Coolant temperature sensor

(**33**) Engine speed and position sensor

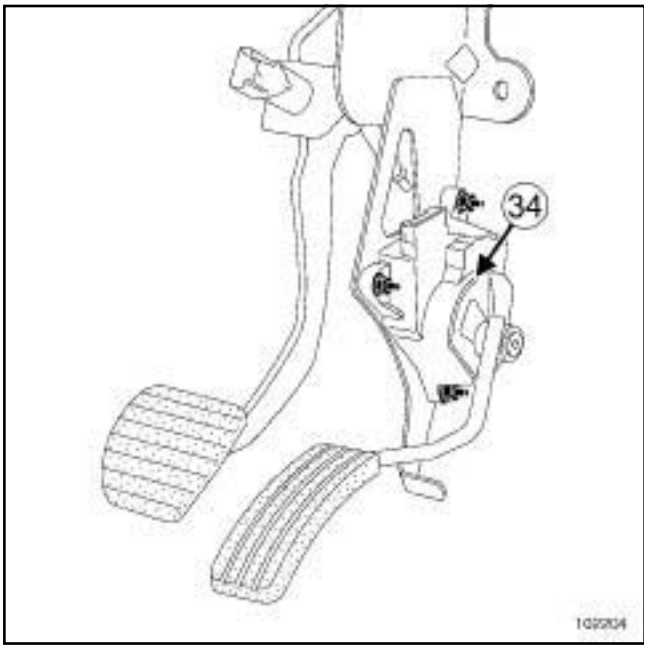

102204

(**34**) Accelerator pedal potentiometer

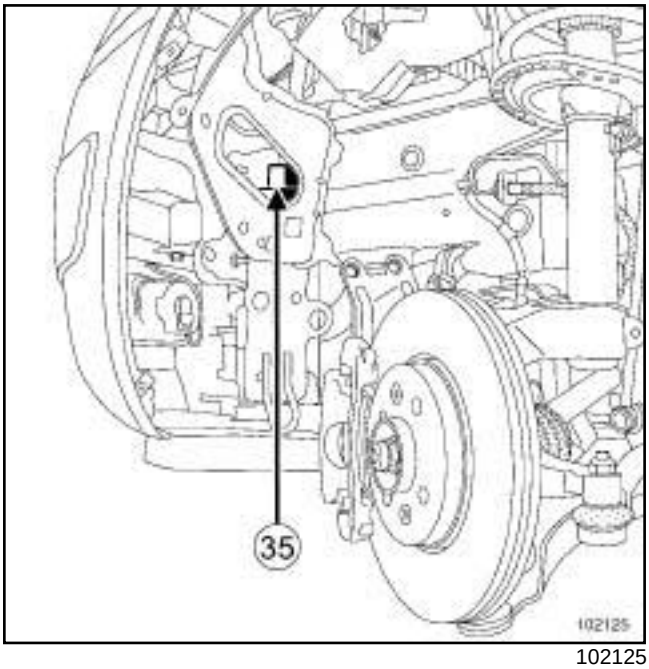

102125

(**35**) Pre-postheating unit

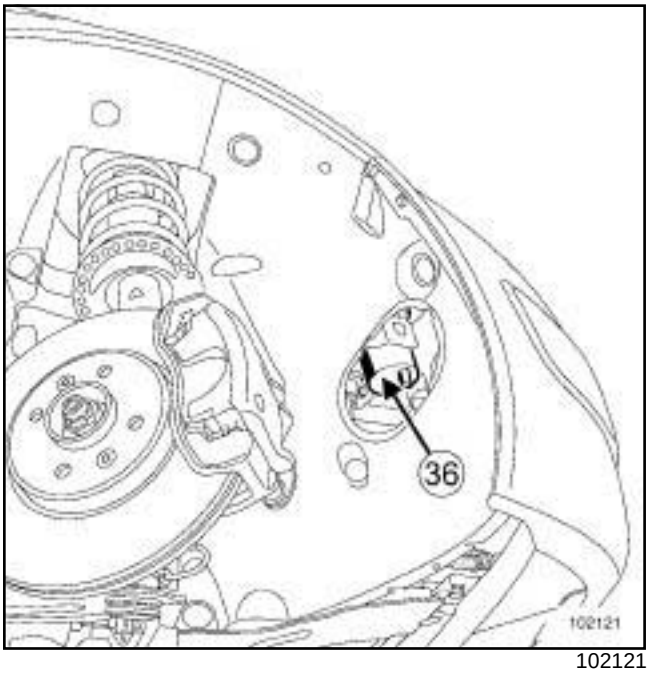

102121

(**36**) Diesel filter

B84 or C84 or G84 or S84, and K9K, and 722

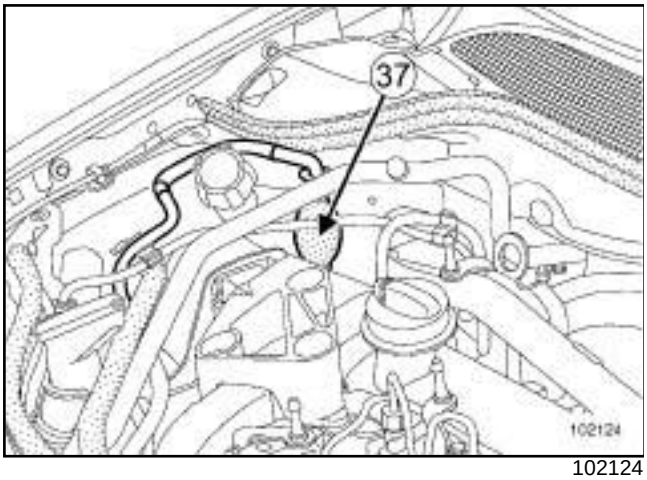

102124

(**37**) Priming pump

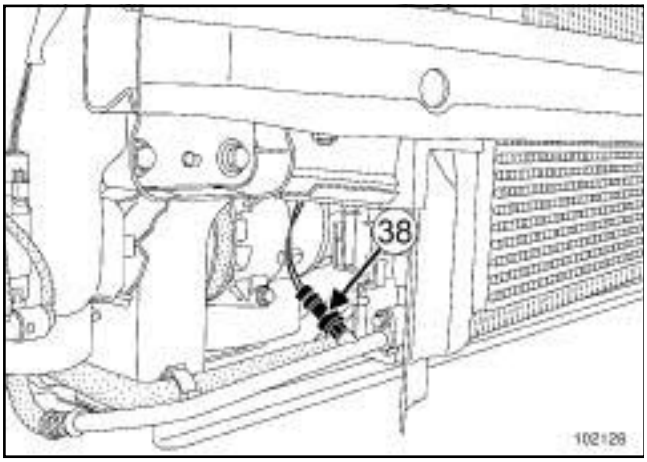

102128

(**38**) Refrigerant pressure sensor

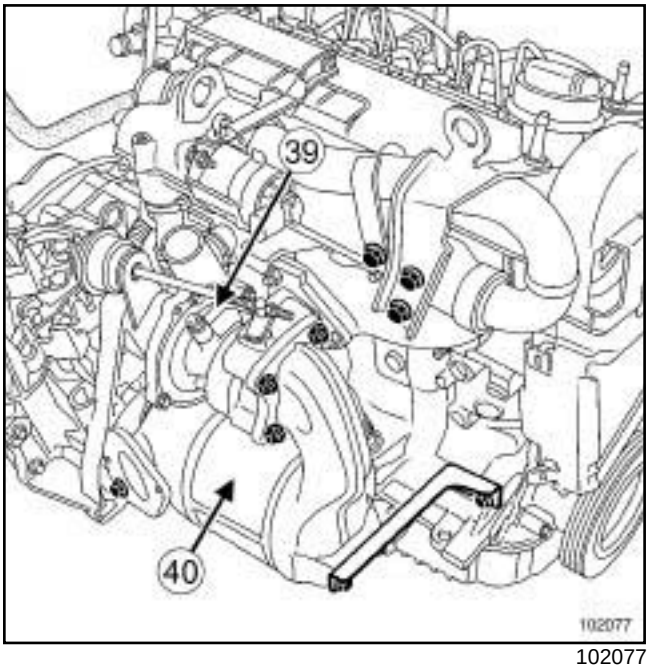

102077

(**39**) Turbocharger

(**40**) Catalytic converter

B84 or C84 or G84 or S84, and K9K, and 728 or 729

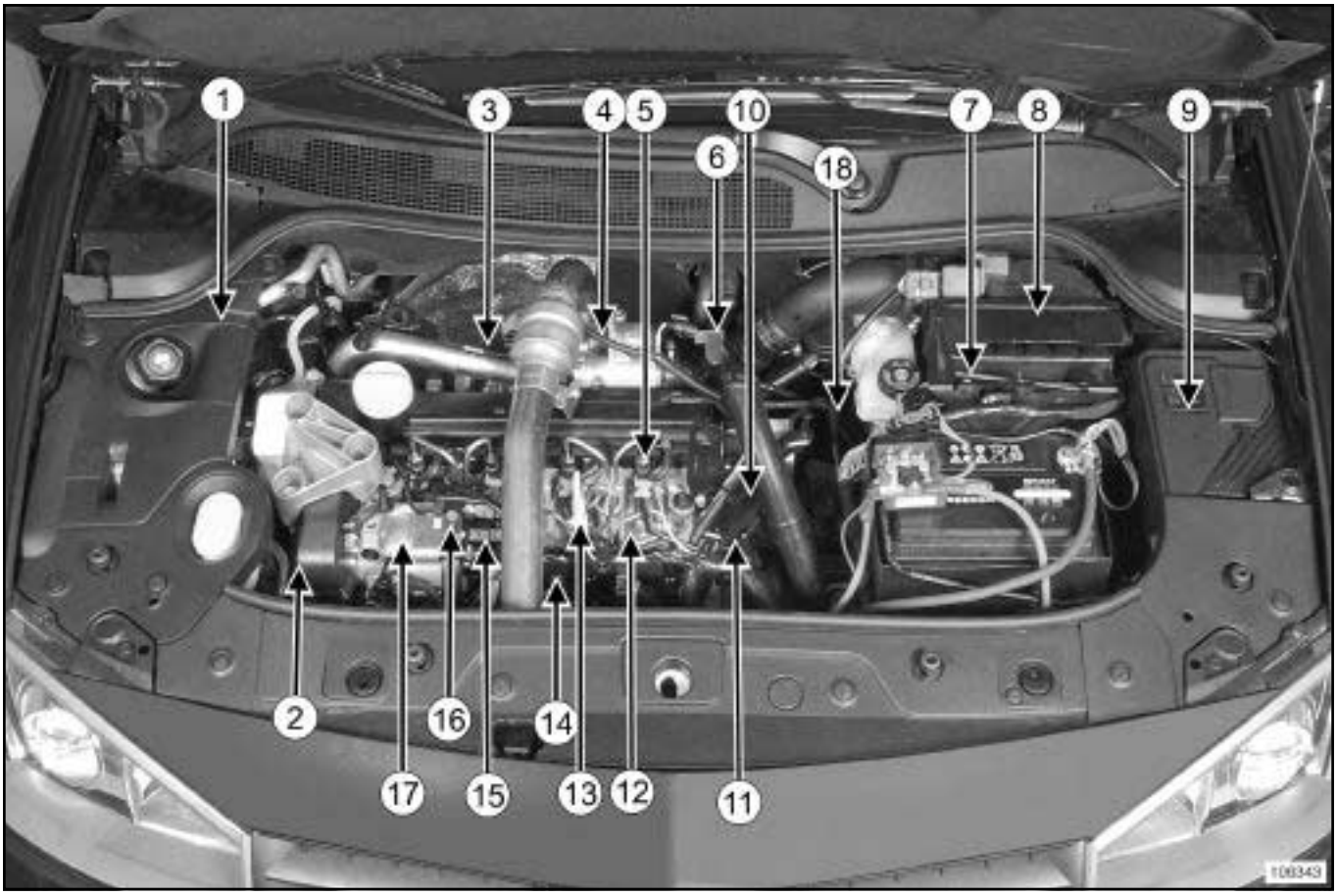

106343

(**1**) Priming pump
(**2**) Cylinder reference sensor
(**3**) Turbocharger
(**4**) Exhaust gas recirculation solenoid valve
(**5**) Injector
(**6**) Turbocharging air temperature and pressure sensor
(**7**) Injection computer
(**8**) Air filter unit
(**9**) UPC
(**10**) Coolant temperature sensor
(**11**) Engine speed and position sensor
(**12**) Rail pressure sensor
(**13**) Spherical injection rail
(**14**) Accelerometer
(**15**) Diesel fuel temperature sensor
(**16**) Diesel fuel flow actuator
(**17**) High pressure pump
(**18**) Turbocharging pressure solenoid valve

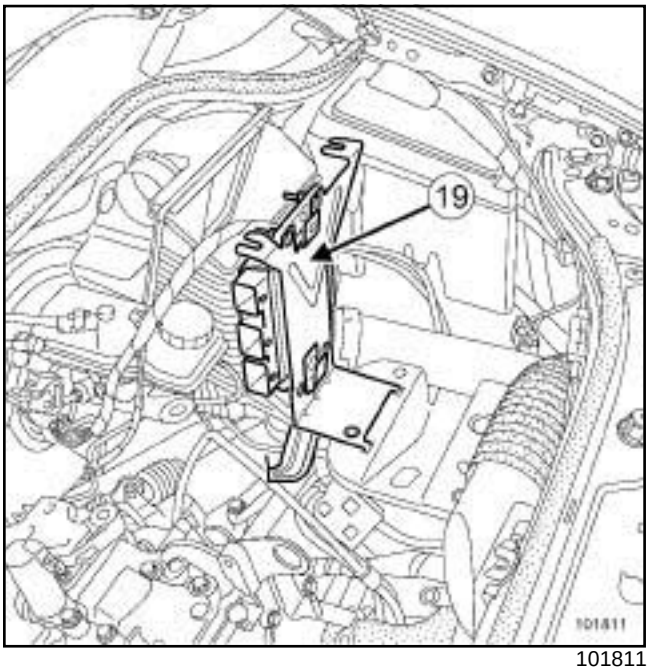

101811

(**19**) Injection computer

B84 or C84 or G84 or S84, and K9K, and 728 or 729

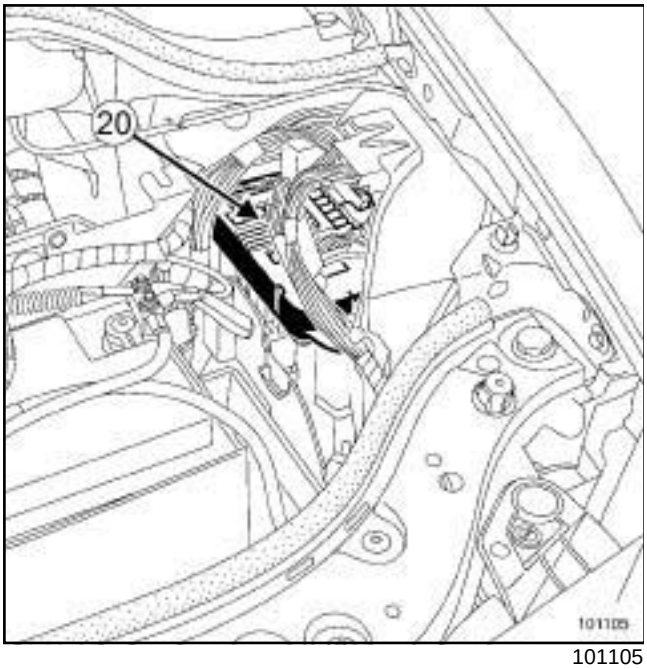

101105

(**20**) UPC

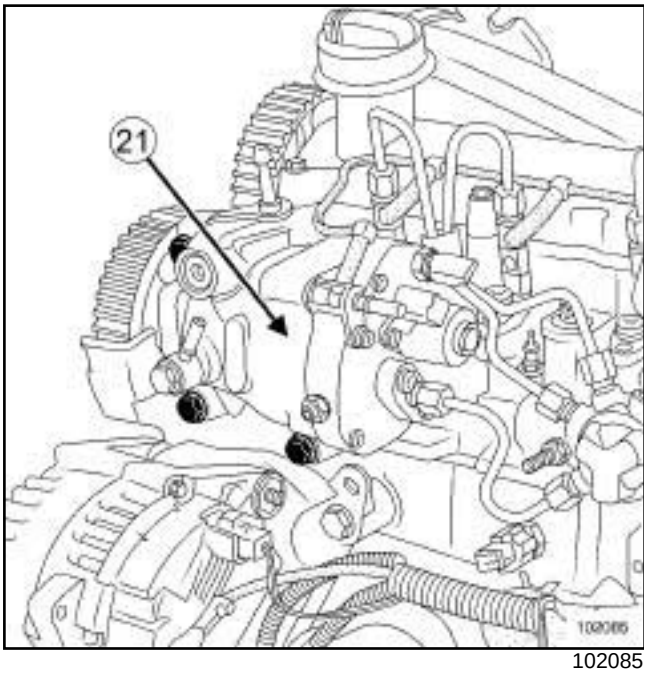

102085

(**21**) High pressure pump

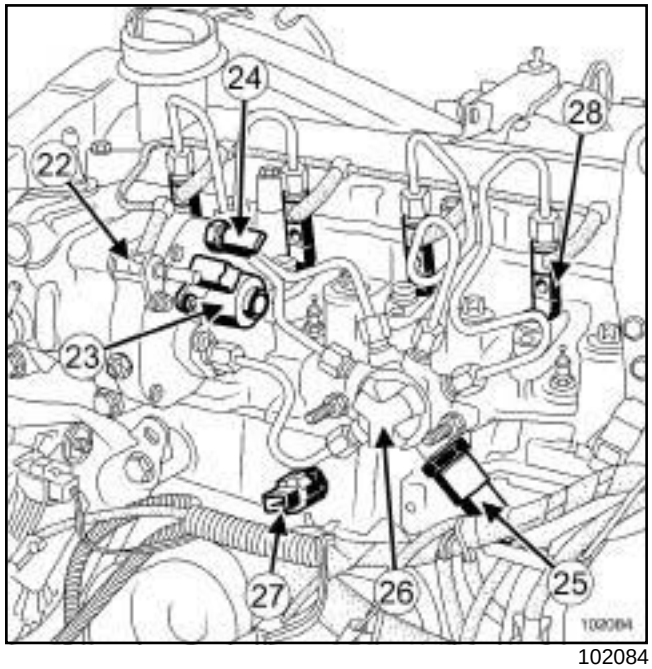

102084

(**22**) Venturi
(**23**) Fuel flow actuator
(**24**) Diesel fuel temperature sensor
(**25**) Rail pressure sensor
(**26**) Spherical injection rail
(**27**) Accelerometer
(**28**) Injector

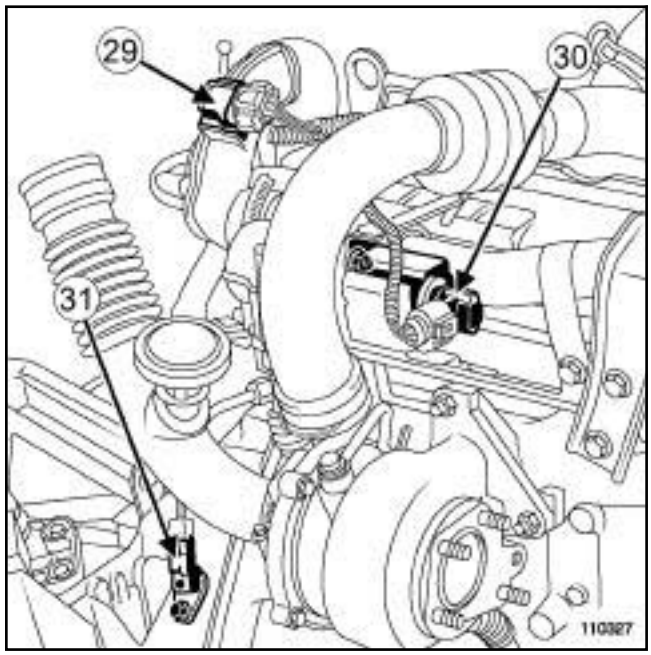

110327

B84 or C84 or G84 or S84, and K9K, and 728 or 729

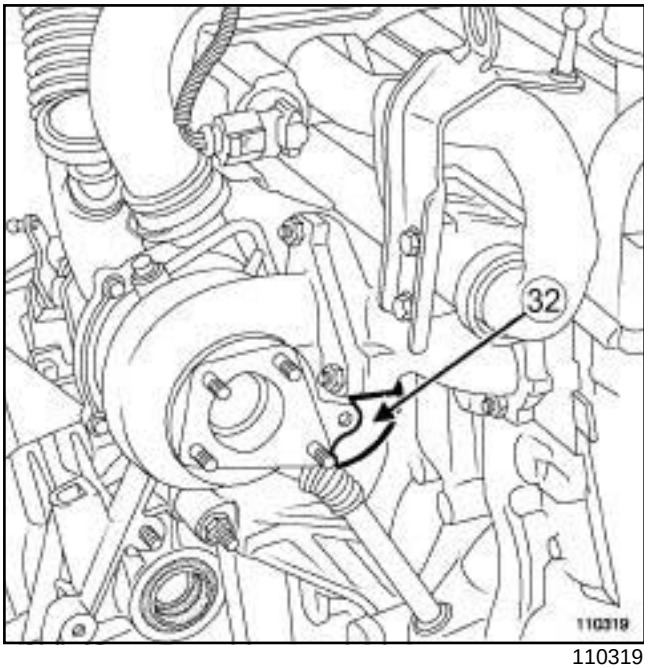

110319

(**29**)	Turbocharging air temperature and pressure sensor
(**30**)	Exhaust gas recirculation solenoid valve
(**31**)	Engine speed and position sensor
(**32**)	Turbocharging pressure regulation valve

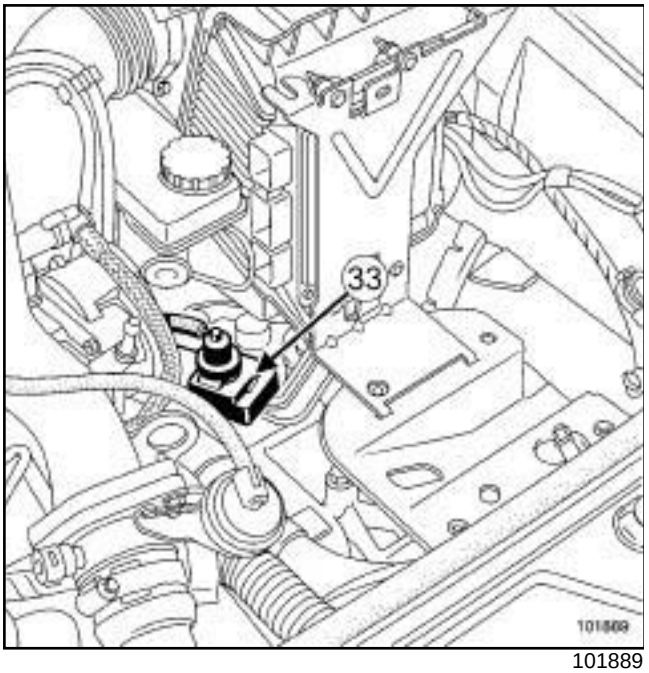

101889

(**33**)	Turbocharging pressure regulation solenoid valve

B84 or C84 or G84 or S84, and K9K, and 728 or 729

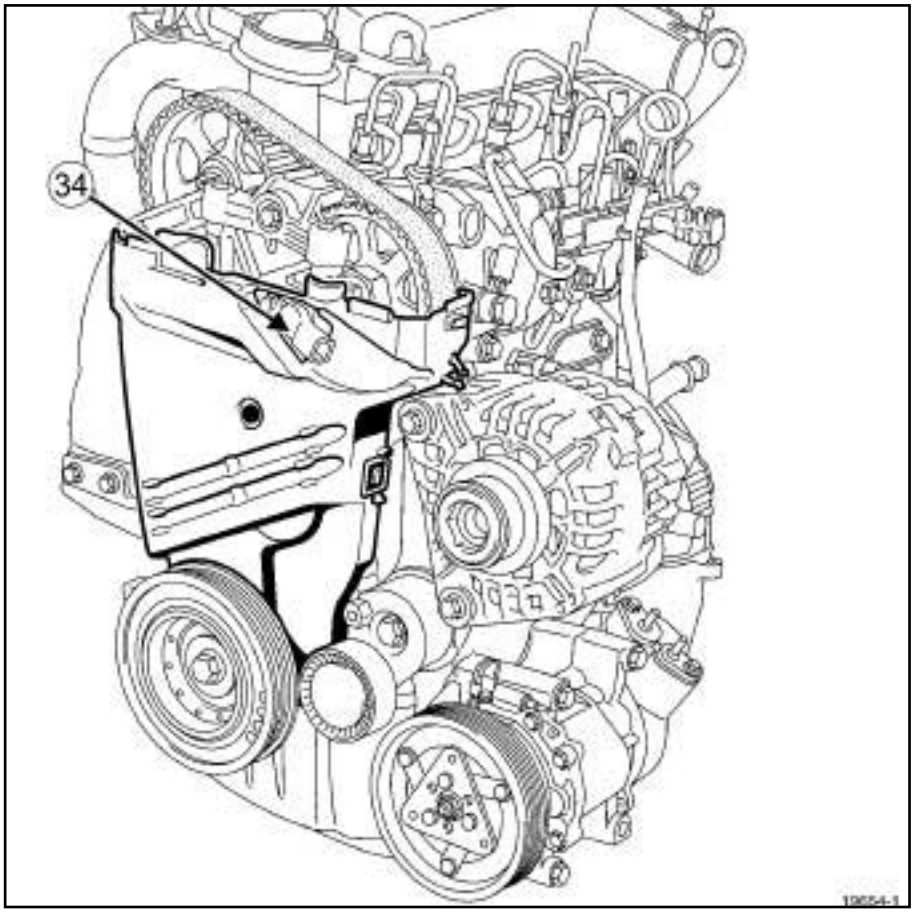

19654-1

(**34**) Cylinder reference sensor

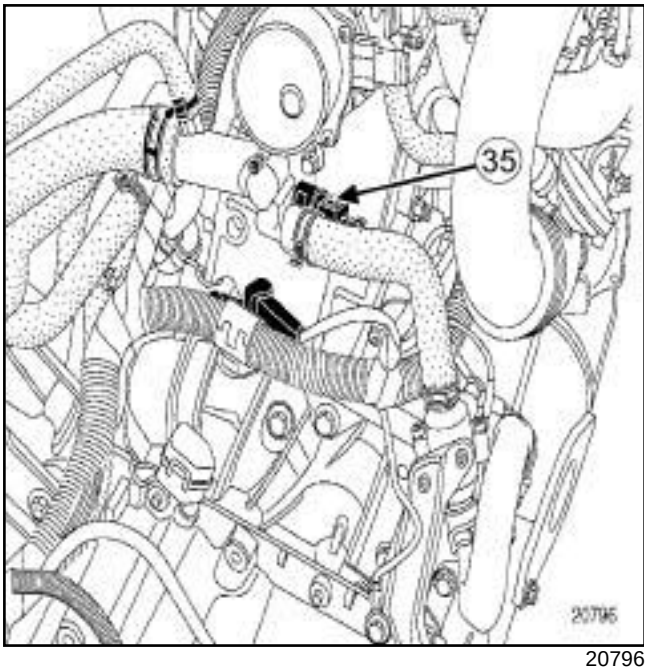

20796

(**35**) Coolant temperature sensor

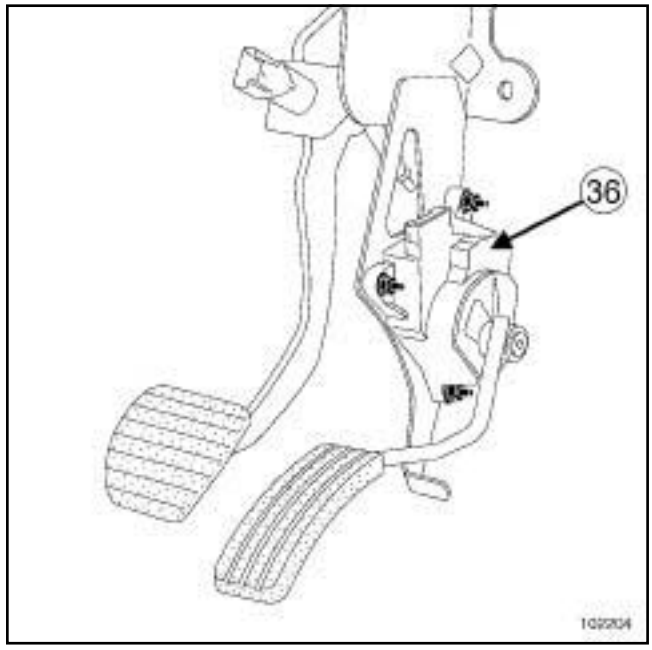

102204

(**36**) Accelerator pedal potentiometer

B84 or C84 or G84 or S84, and K9K, and 728 or 729

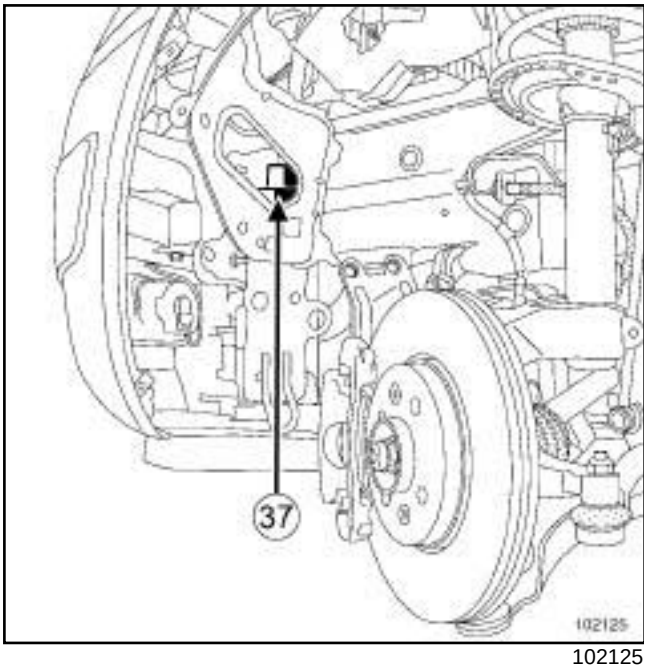

102125

(**37**) Pre-postheating unit

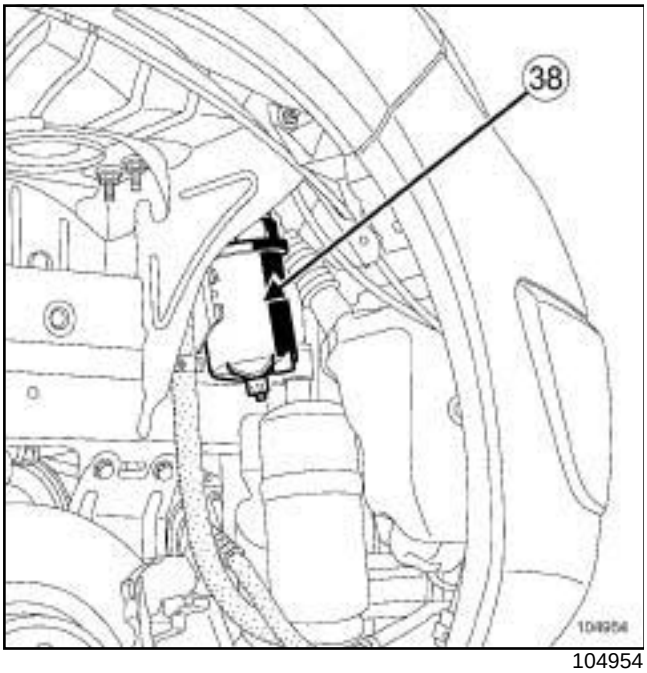

104954

(**38**) Diesel filter

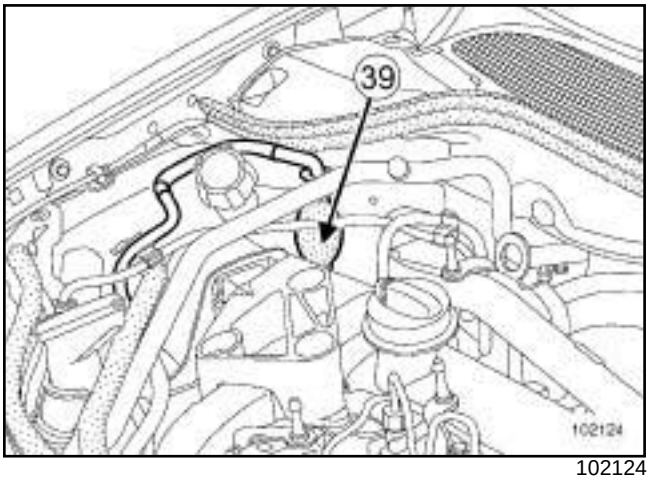

102124

(**39**) Priming pump

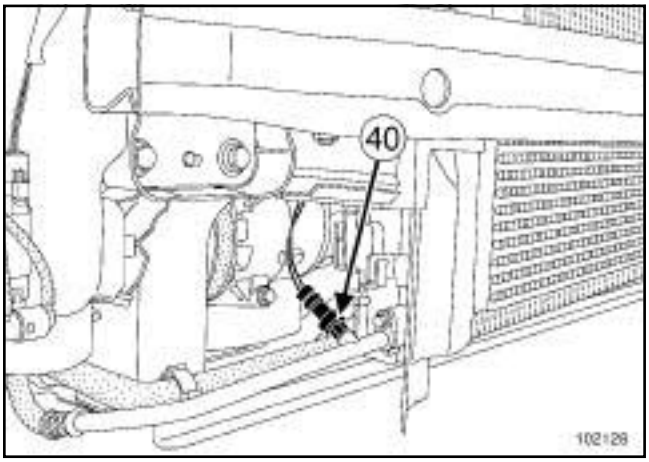

102128

(**40**) Refrigerant pressure sensor

B84 or C84 or G84 or S84, and K9K, and 728 or 729

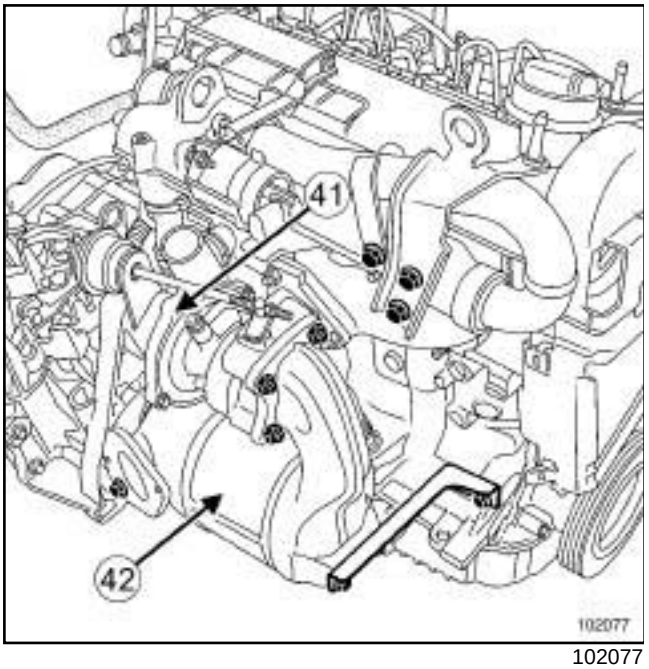

102077

(**41**)	Turbocharger
(**42**)	Catalytic converter

B84 or C84 or G84 or S84, and K9K, and 732

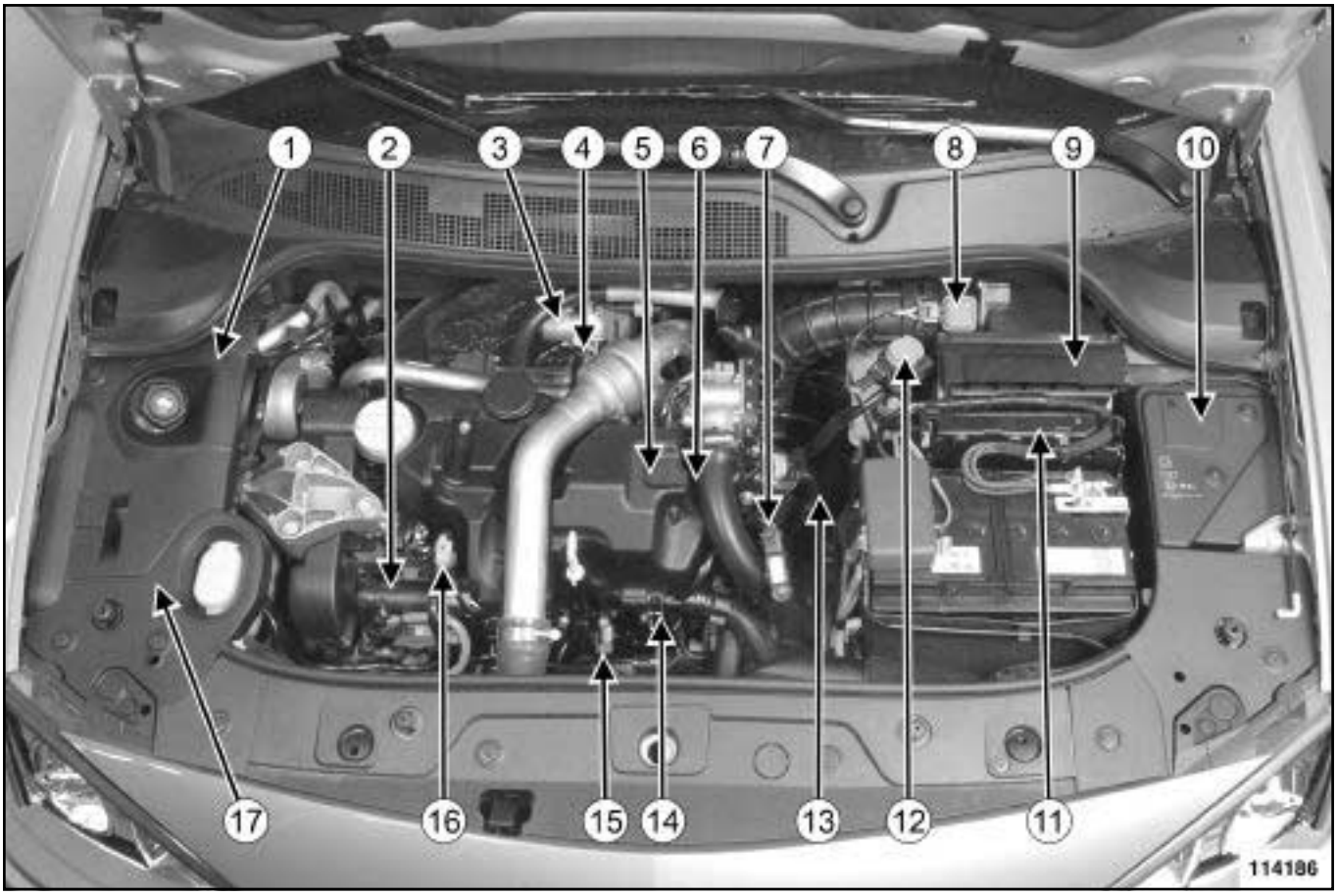

114186

(**1**) Manual priming pump
(**2**) High pressure pump
(**3**) Exhaust gas recirculation solenoid valve
(**4**) Turbocharger
(**5**) Injectors
(**6**) Cylinder reference sensor
(**7**) Turbocharging air pressure sensor
(**8**) Air flowmeter
(**9**) Air filter unit
(**10**) Protection and Switching Unit
(**11**) Injection computer
(**12**) Turbocharging pressure regulation solenoid valve
(**13**) Coolant temperature sensor
(**14**) Injection rail
(**15**) Injection rail pressure sensor
(**16**) Diesel fuel temperature sensor
(**17**) Diesel filter

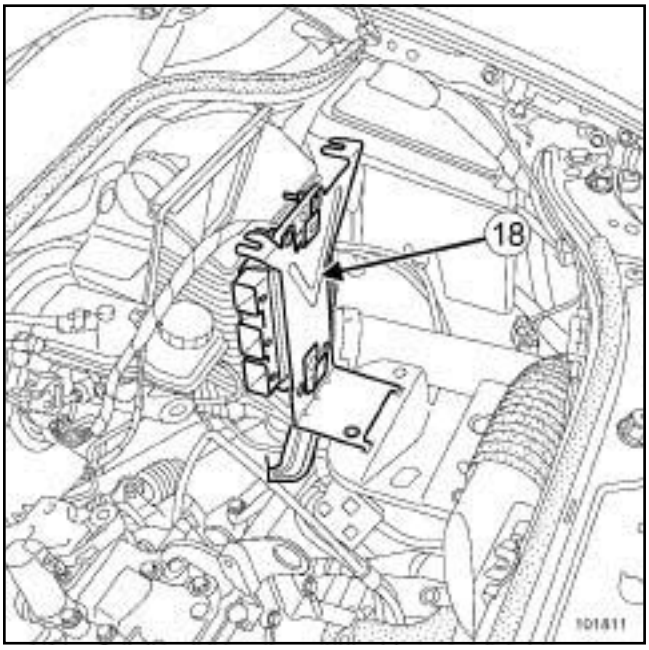

101811

(**18**) Injection computer

B84 or C84 or G84 or S84, and K9K, and 732

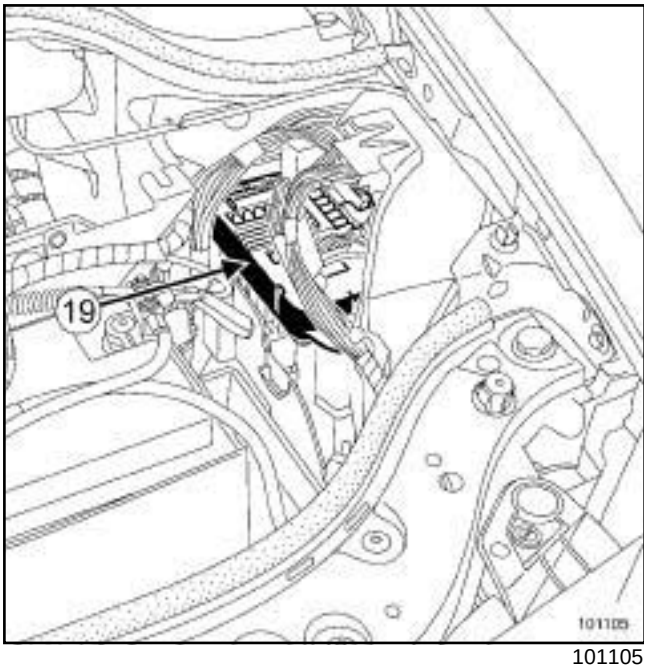

101105

(**19**) Protection and Switching Unit

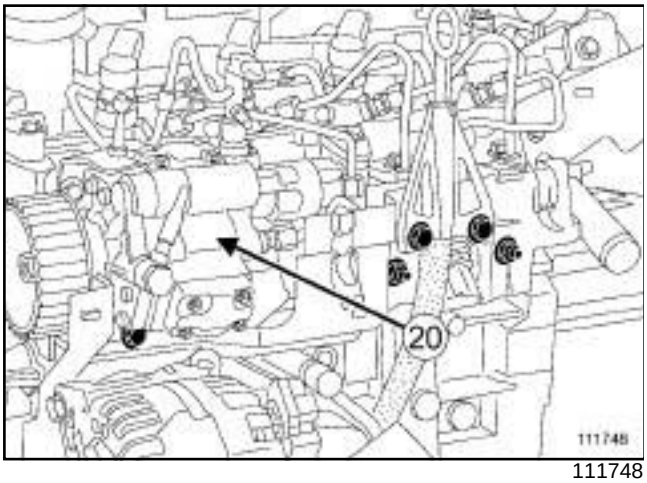

111748

(**20**) High pressure pump

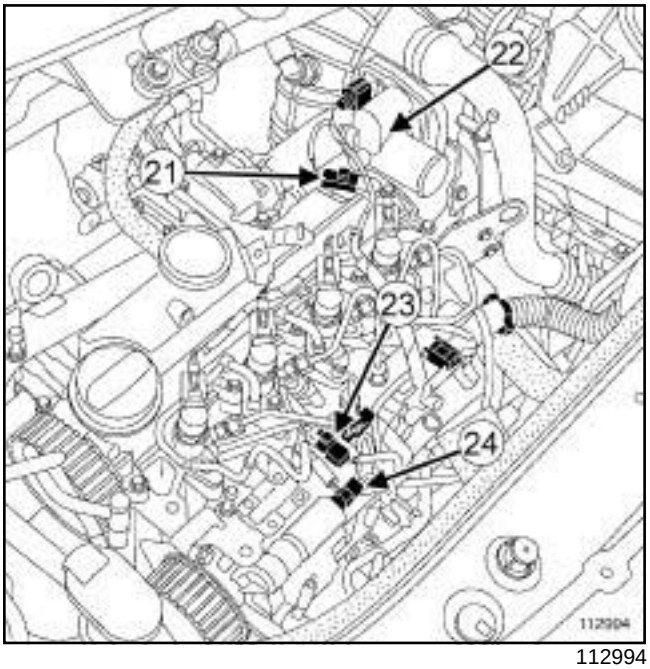

112994

(**21**) Cylinder reference sensor

(**22**) Air inlet valve

(**24**) Pressure regulation solenoid valve

(**23**) Flow regulation solenoid valve

B84 or C84 or G84 or S84, and K9K, and 732

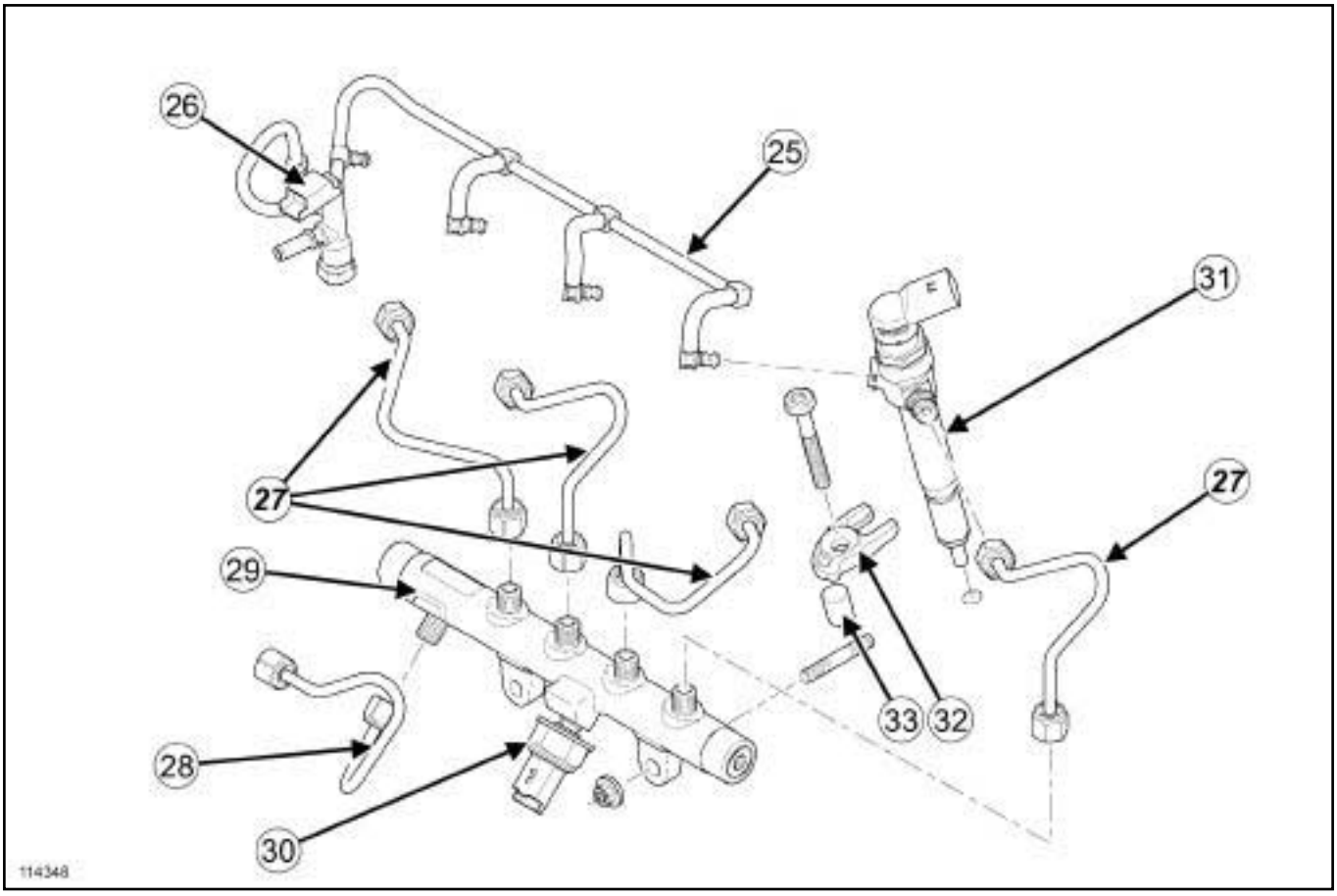

114348

(**25**) Diesel injector fuel return rail

(**26**) Diesel temperature sensor

(**27**) High pressure pipe between the rail and injector

(**28**) High pressure pipe between the pump and rail

(**29**) High pressure rail

(**30**) Rail pressure sensor

(**31**) Diesel injector

(**32**) Injector bracket

(**33**) Spacer between the cylinder head and injector bracket

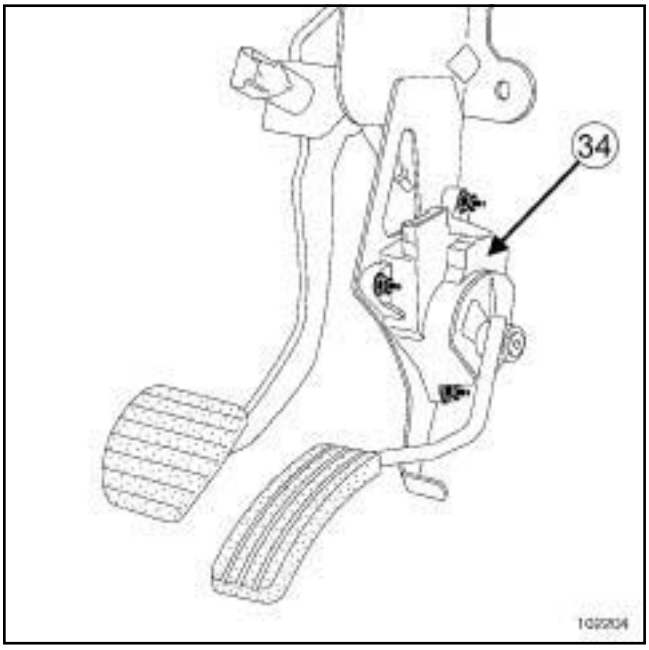

102204

(**34**) Accelerator pedal potentiometer

B84 or C84 or G84 or S84, and K9K, and 732

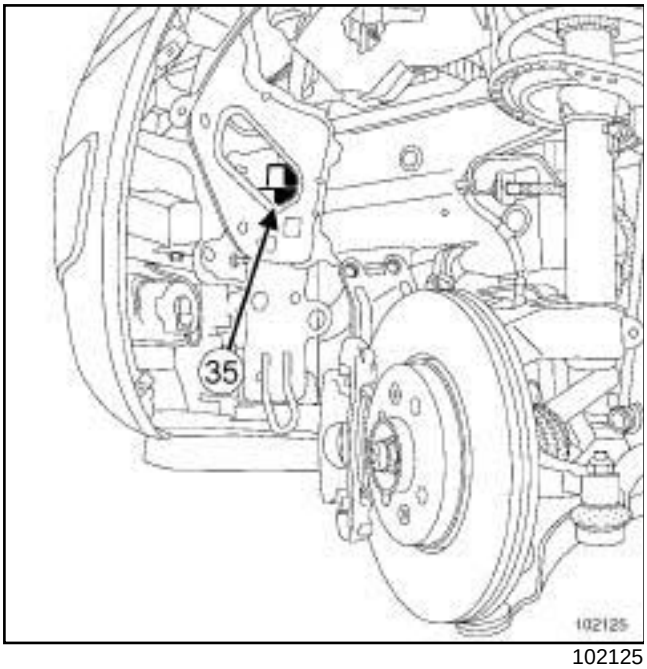

102125

(**35**) Pre-postheating unit

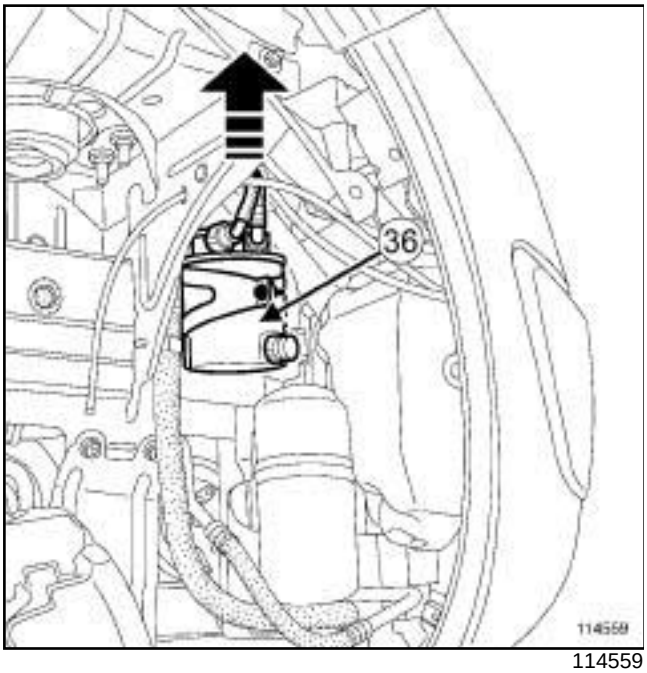

114559

(**36**) Diesel filter

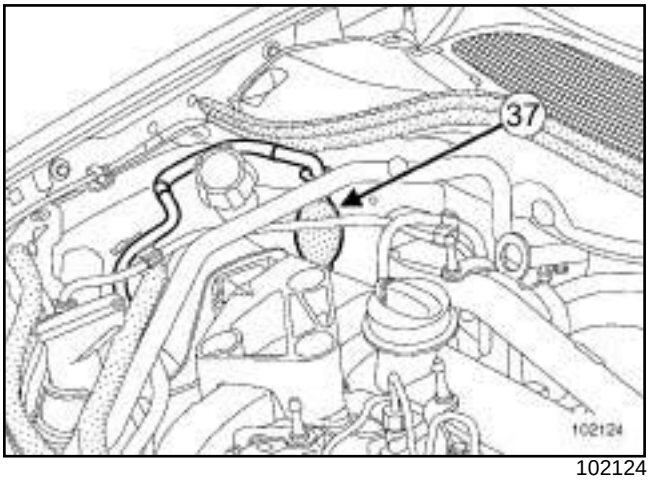

102124

(**37**) Priming pump

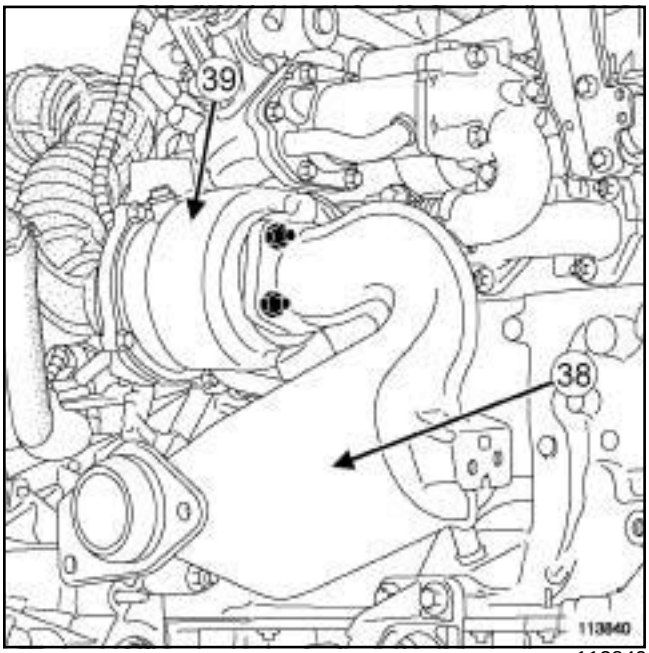

113840

(**38**) Catalytic converter

(**39**) Turbocharger

B84 or C84 or G84 or S84, and K9K, and 732

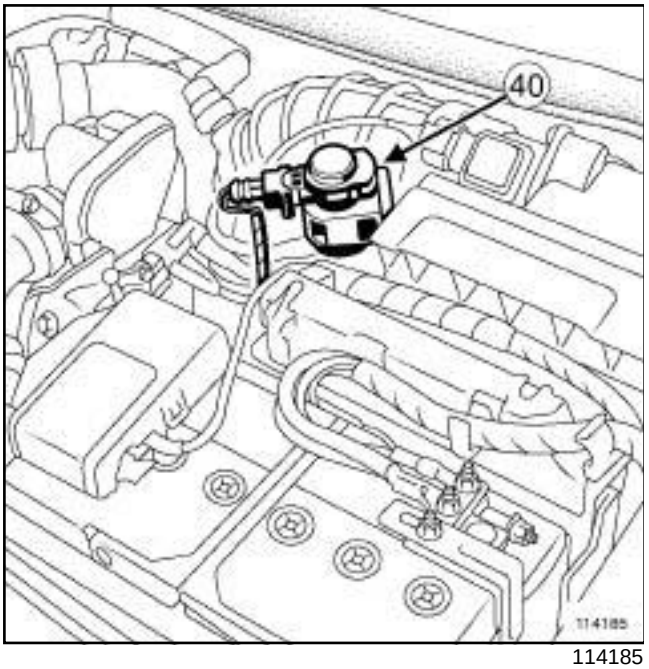

114185

(**40**) Turbocharging pressure regulation solenoid valve

Diesel injection: List and location of components

B84 or C84 or G84 or S84, and F9Q, and 800 or 808

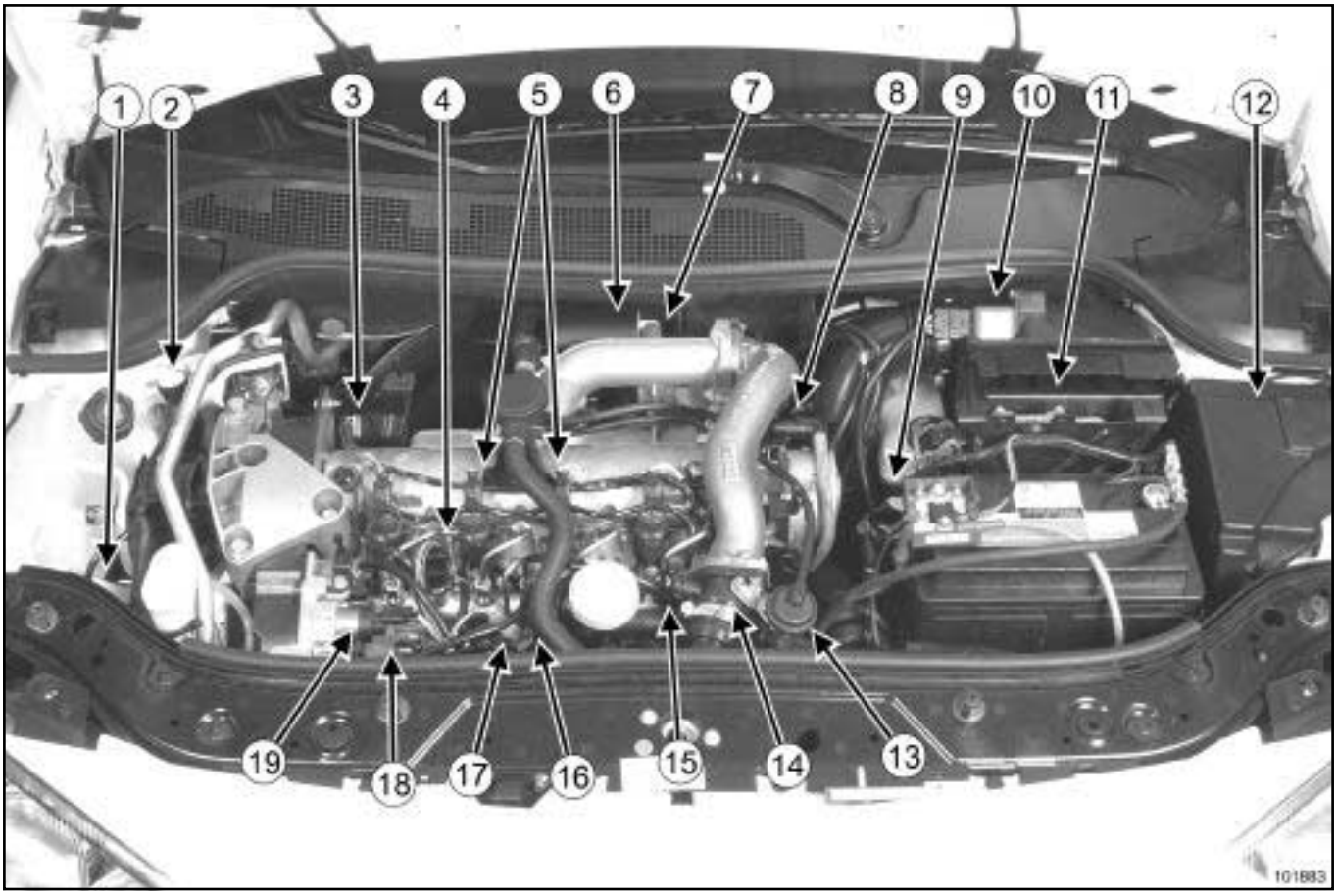

101883

(**1**) Diesel filter

(**2**) Manual priming pump

(**3**) Camshaft position sensor

(**4**) Rail pressure sensor

(**5**) Diesel injector

(**6**) Engine damper flap vacuum reserve

(**7**) Engine damper flap solenoid valve

(**8**) Exhaust gas recirculation solenoid valve (F9Q 800)

(**9**) Turbocharger regulation solenoid valve

(**10**) Flowmeter with air temperature sensor

(**11**) Injection computer

(**12**) Protection and Switching Unit

(**13**) Engine damper flap control diaphragm

(**14**) Engine stop flap

(**15**) Pressure limiter (on injector rail)

(**16**) Turbocharging pressure sensor

(**17**) Diesel temperature sensor (fuel return)

(**18**) High pressure pump

(**19**) Diesel pressure regulator

B84 or C84 or G84 or S84, and F9Q, and 800 or 808

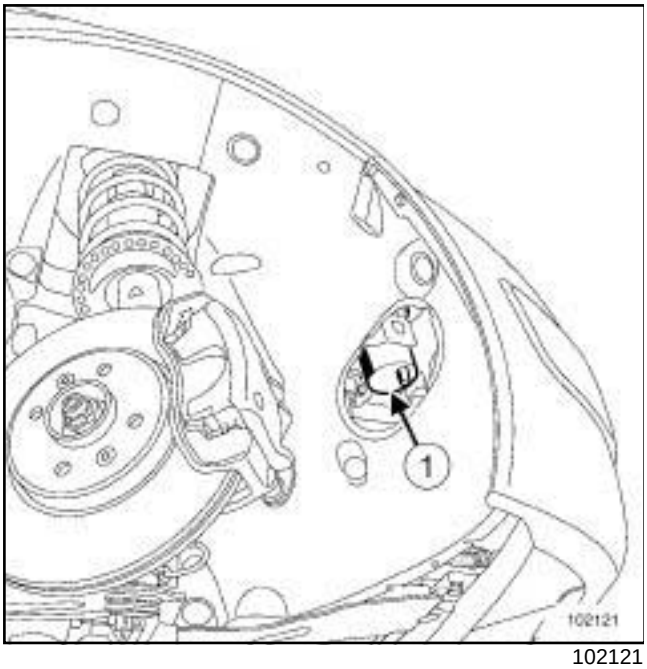

102121

(**1**) Diesel filter

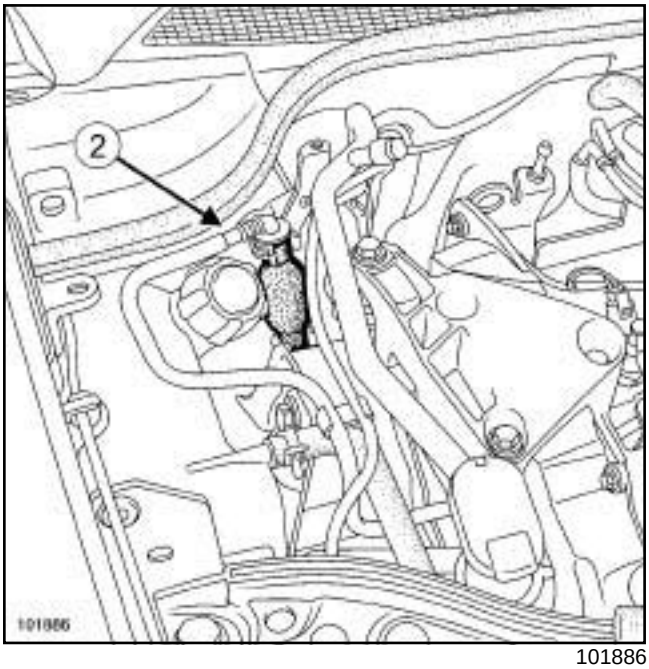

101886

(**2**) Manual priming pump

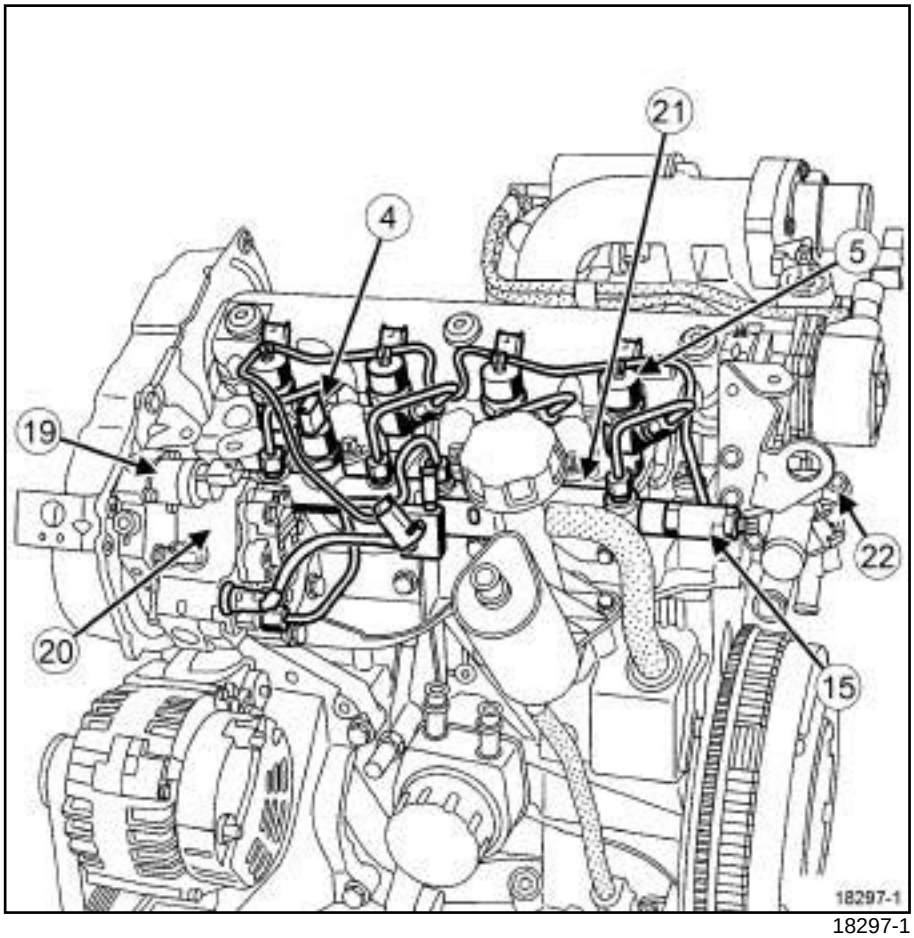

18297-1

(**4**) Rail pressure sensor

(**5**) Diesel injector

(**15**) Pressure limiter

(**19**) Diesel pressure regulator

B84 or C84 or G84 or S84, and F9Q, and 800 or 808

(**20**) High pressure pump

(**21**) Injector rail

(**22**) Diesel fuel temperature sensor

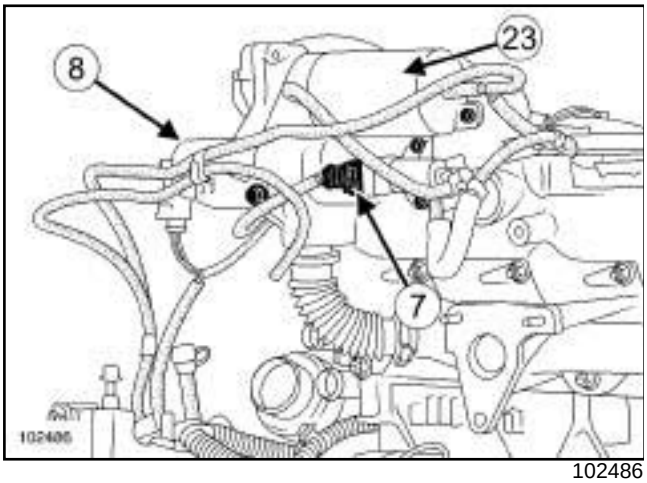

102486

(**7**) Engine damper flap vacuum solenoid valve

(**8**) Exhaust gas recirculation solenoid valve (F9Q 800)

(**23**) Engine damper flap vacuum reserve

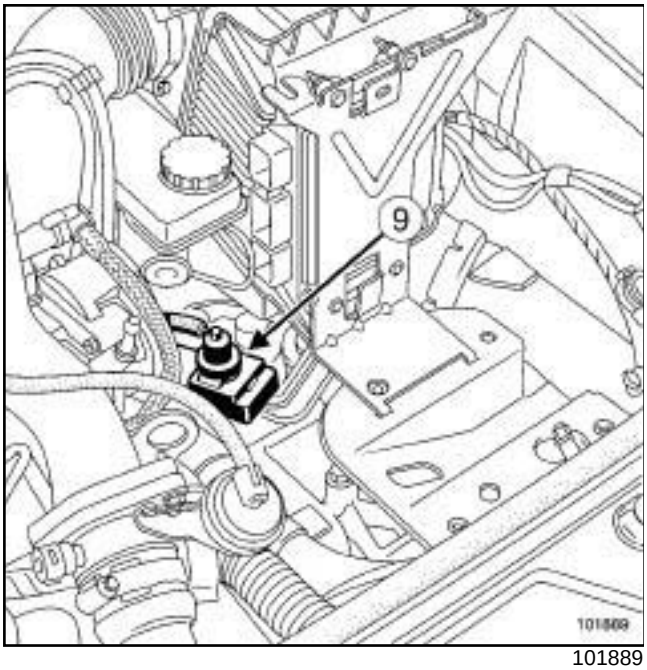

101889

(**9**) Turbocharger regulation solenoid valve

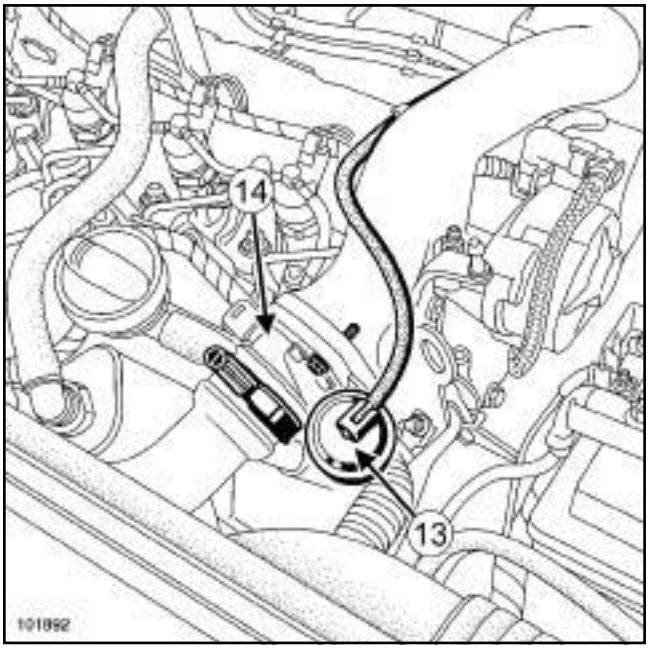

101892

(**13**) Engine damper flap control diaphragm

(**14**) Engine stop flap

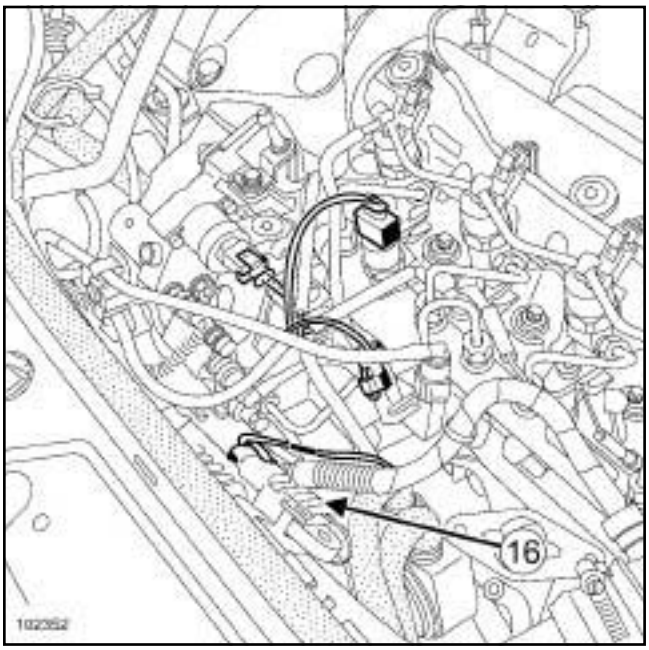

102352

(**16**) Turbocharging pressure sensor

B84 or C84 or G84 or S84, and F9Q, and 800 or 808

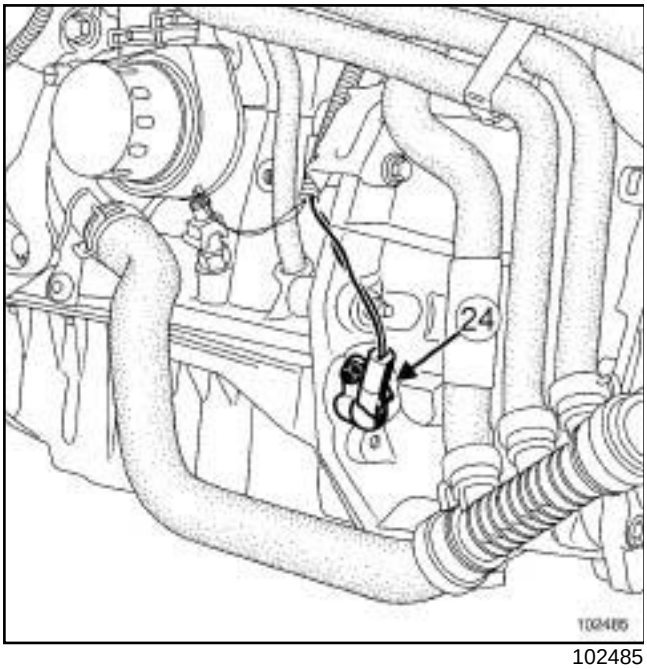

102485

(**24**) TDC sensor

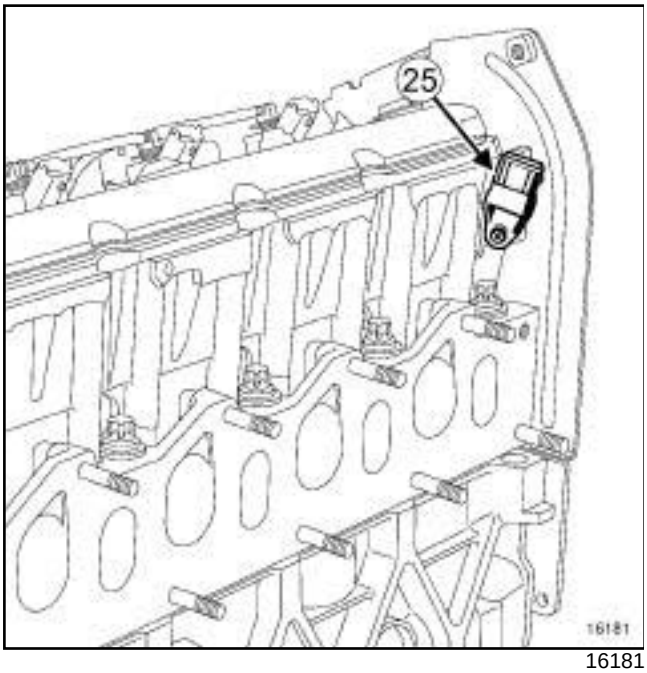

16181

(**25**) Camshaft position sensor

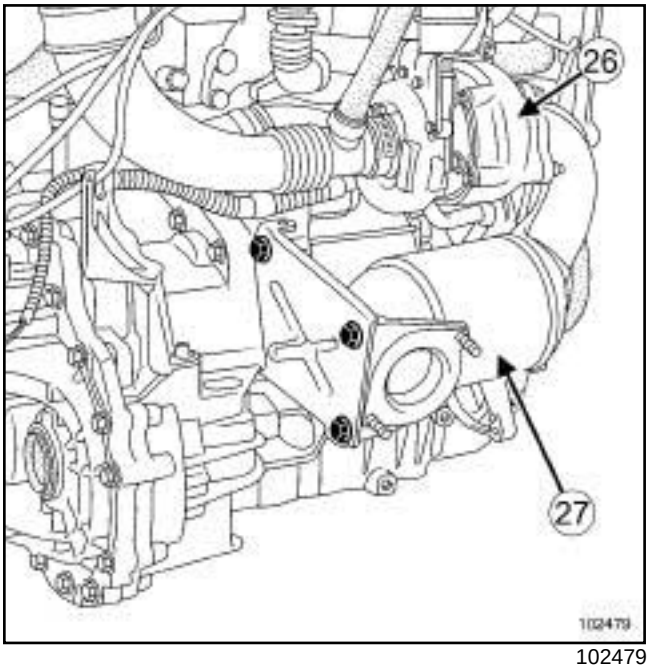

102479

(**26**) Turbocharger

(**27**) Catalytic converter

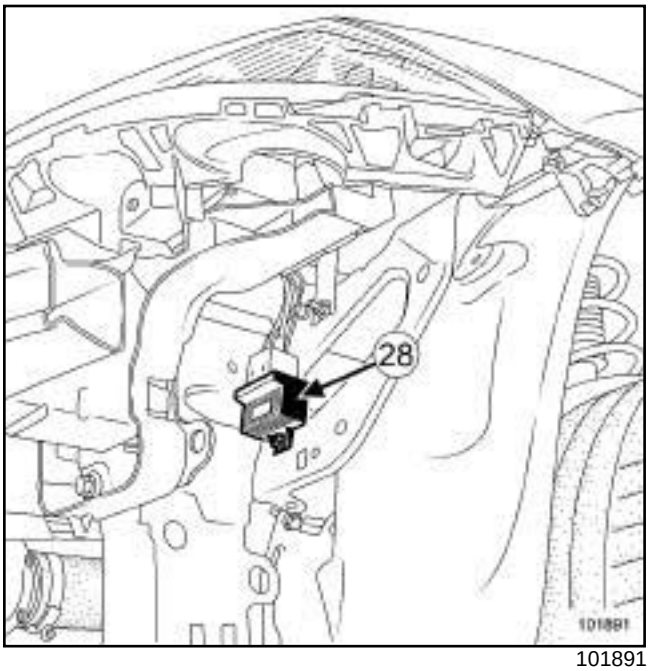

101891

(**28**) Pre-postheating unit

B84 or C84 or G84 or S84, and F9Q, and 800 or 808

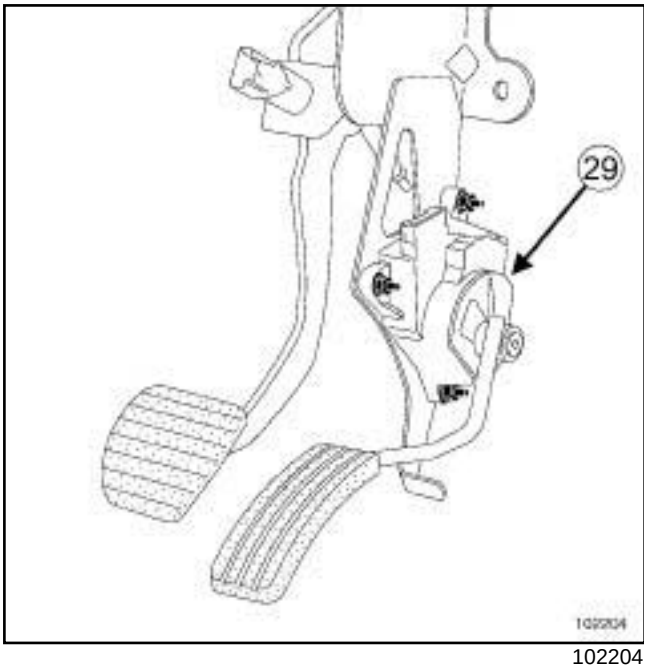

102204

(**29**) Accelerator pedal potentiometer

Diesel injection: List and location of components

B84 or C84 or G84 or S84, and M9R, and 700

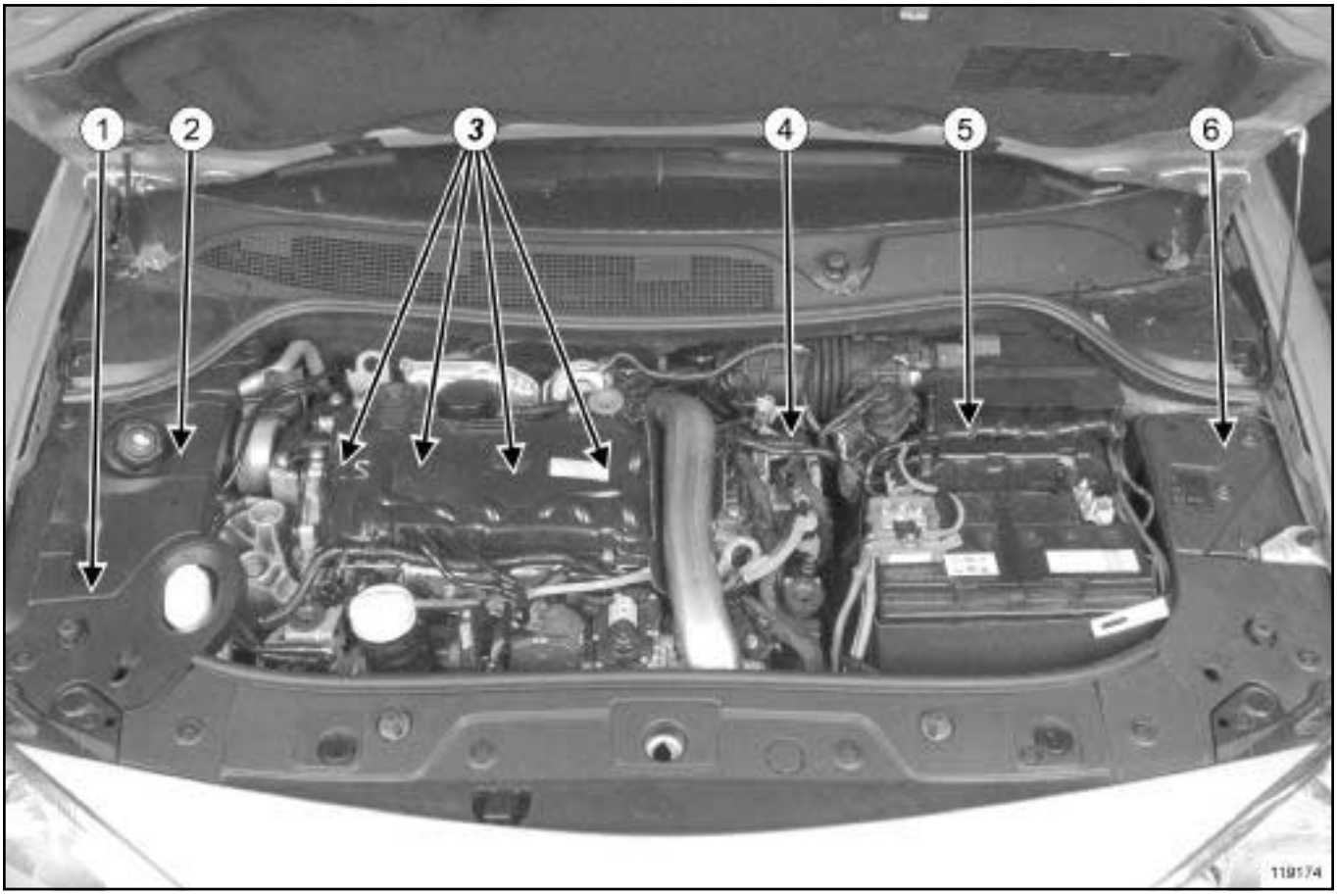

119174

(**1**)	Diesel filter
(**2**)	Manual priming pump
(**3**)	Diesel injectors
(**4**)	High pressure pump
(**5**)	Injection computer
(**6**)	Engine accessories unit

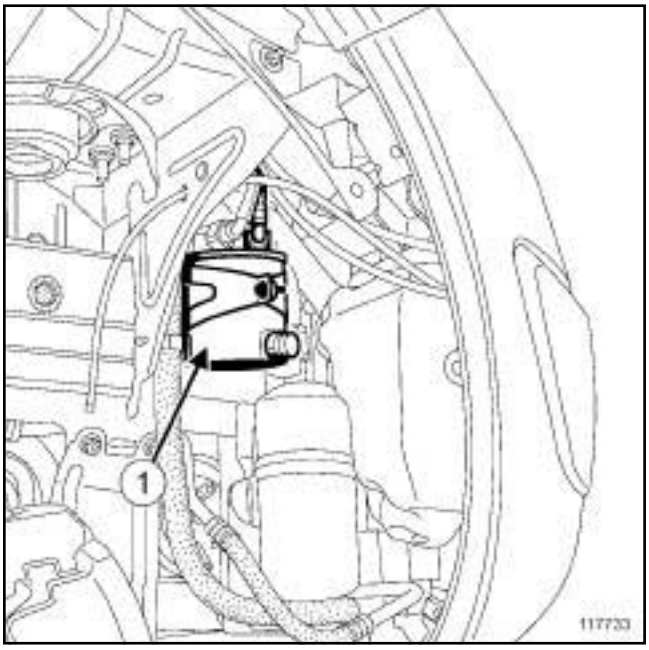

117733

(**1**) Diesel filter

B84 or C84 or G84 or S84, and M9R, and 700

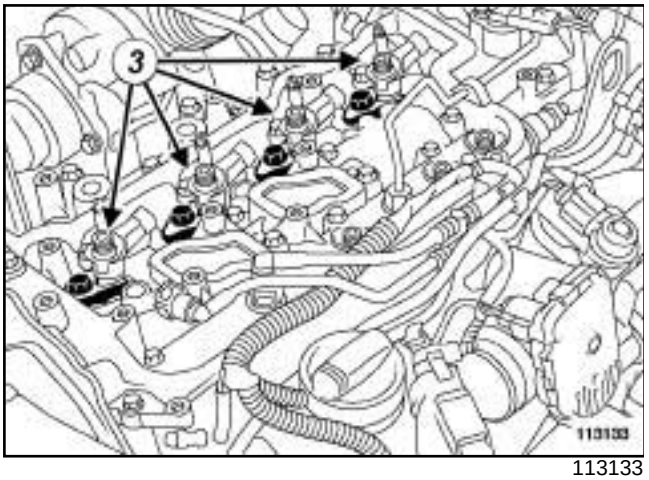

113133

(**3**) Diesel injectors

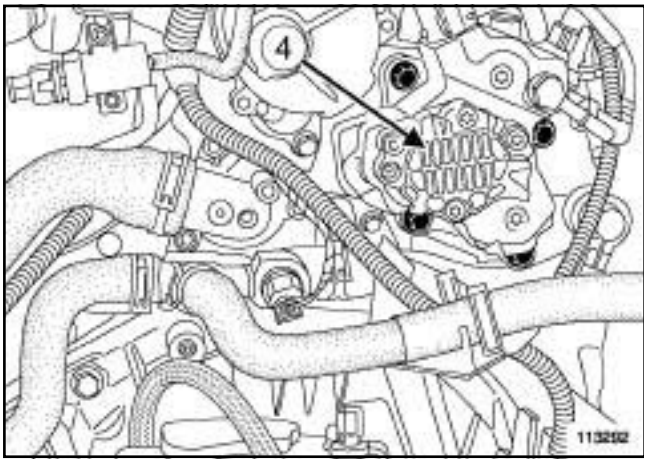

113292

(**4**) High pressure pump

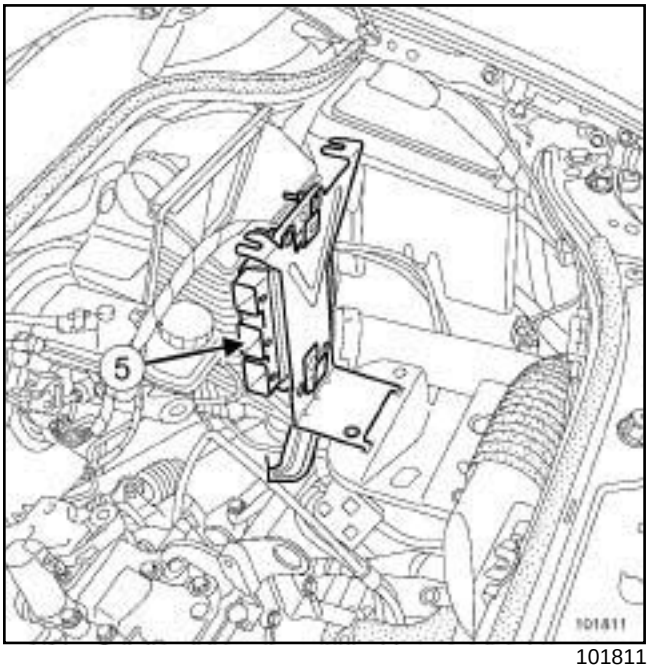

101811

(**5**) Injection computer

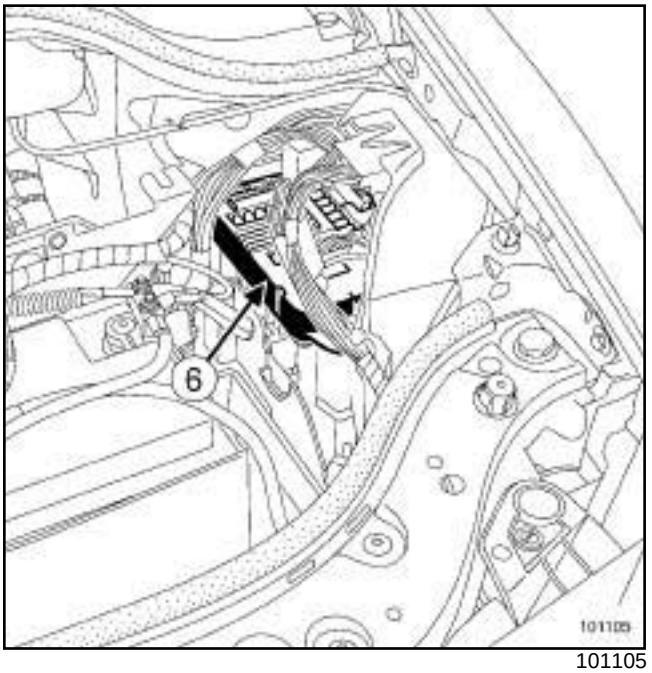

101105

(**6**) Engine accessories unit

B84 or C84 or G84 or S84, and M9R, and 700

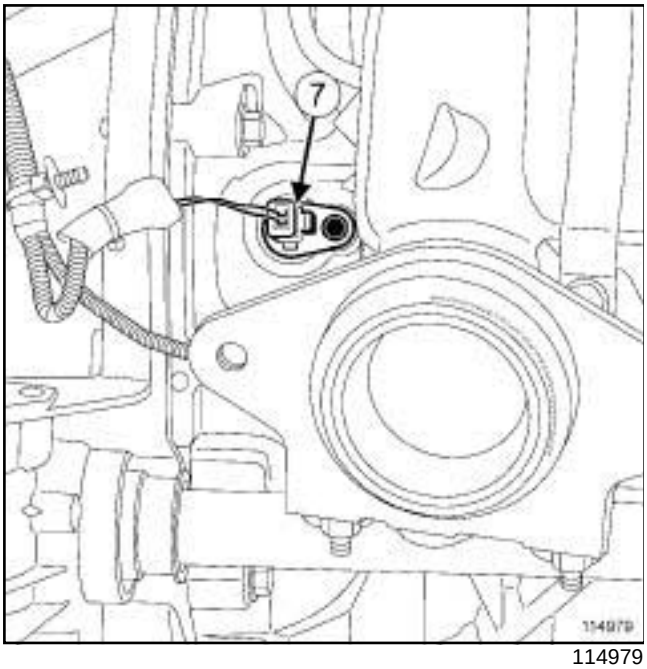

114979

(**7**) Engine speed and position sensor

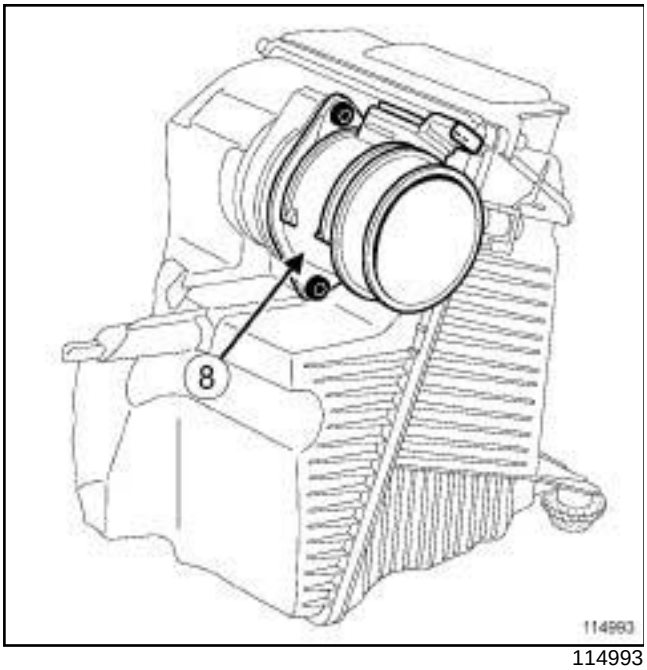

114993

(**8**) Airflow meter

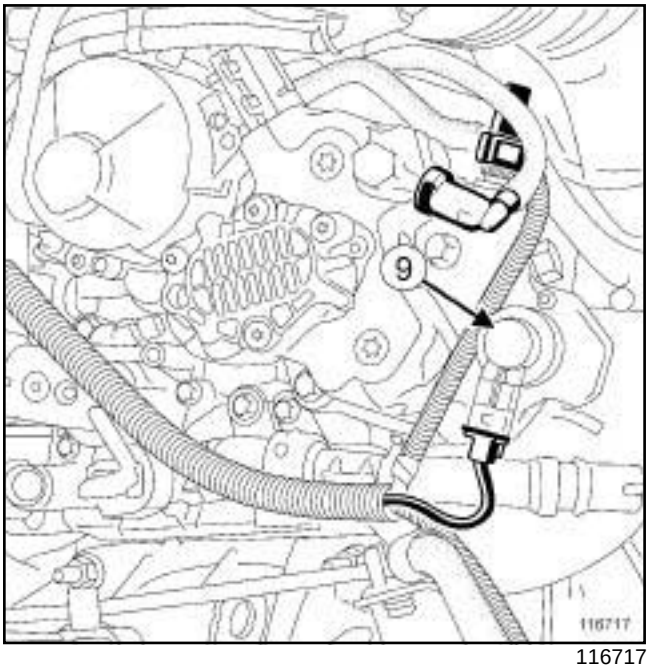

116717

(**9**) Fuel pressure regulator

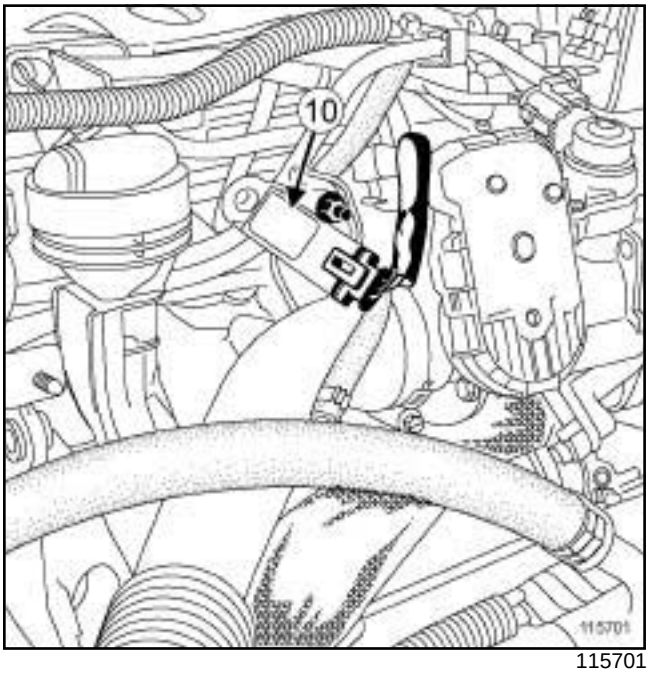

115701

(**10**) Turbocharging pressure sensor

B84 or C84 or G84 or S84, and M9R, and 700

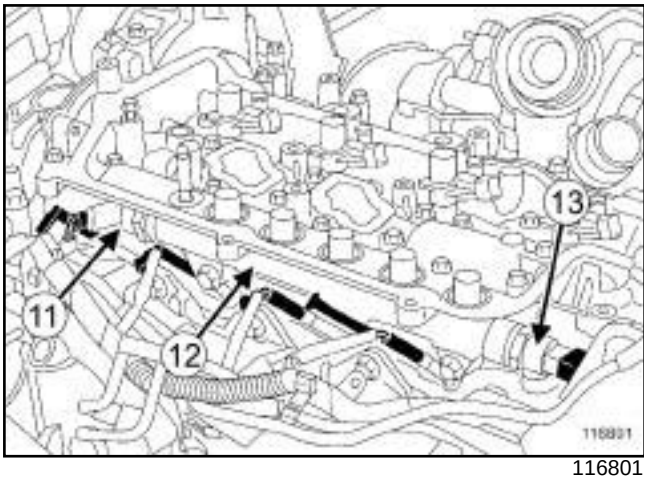

116801

(**11**) Fuel pressure regulator
(**12**) Injector rail
(**13**) Injector rail pressure sensor

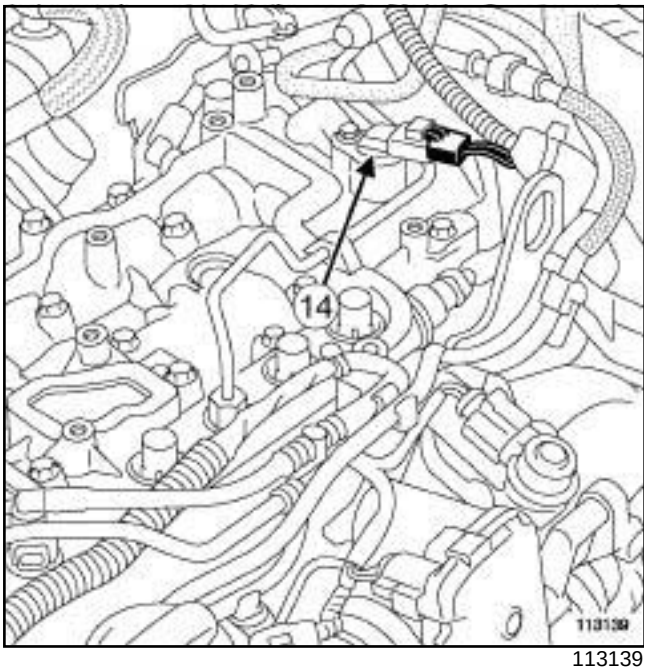

113139

(**14**) Camshaft position sensor

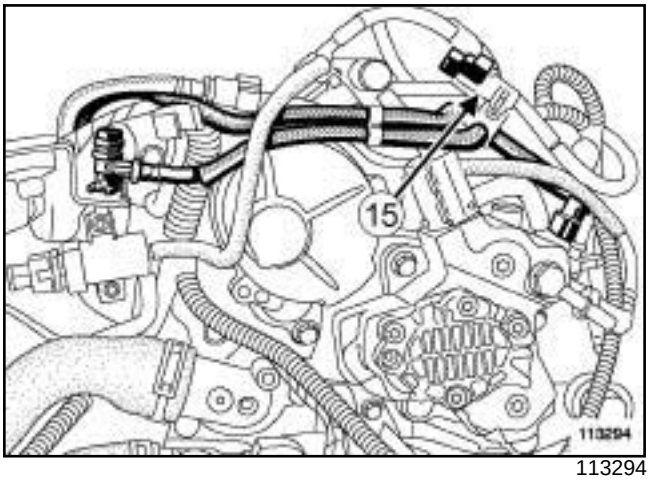

113294

(**15**) Diesel fuel temperature sensor

Diesel injection: List and location of components

B84 or C84 or G84 or S84, and F9Q, and 803 or 804 or 816 or 818

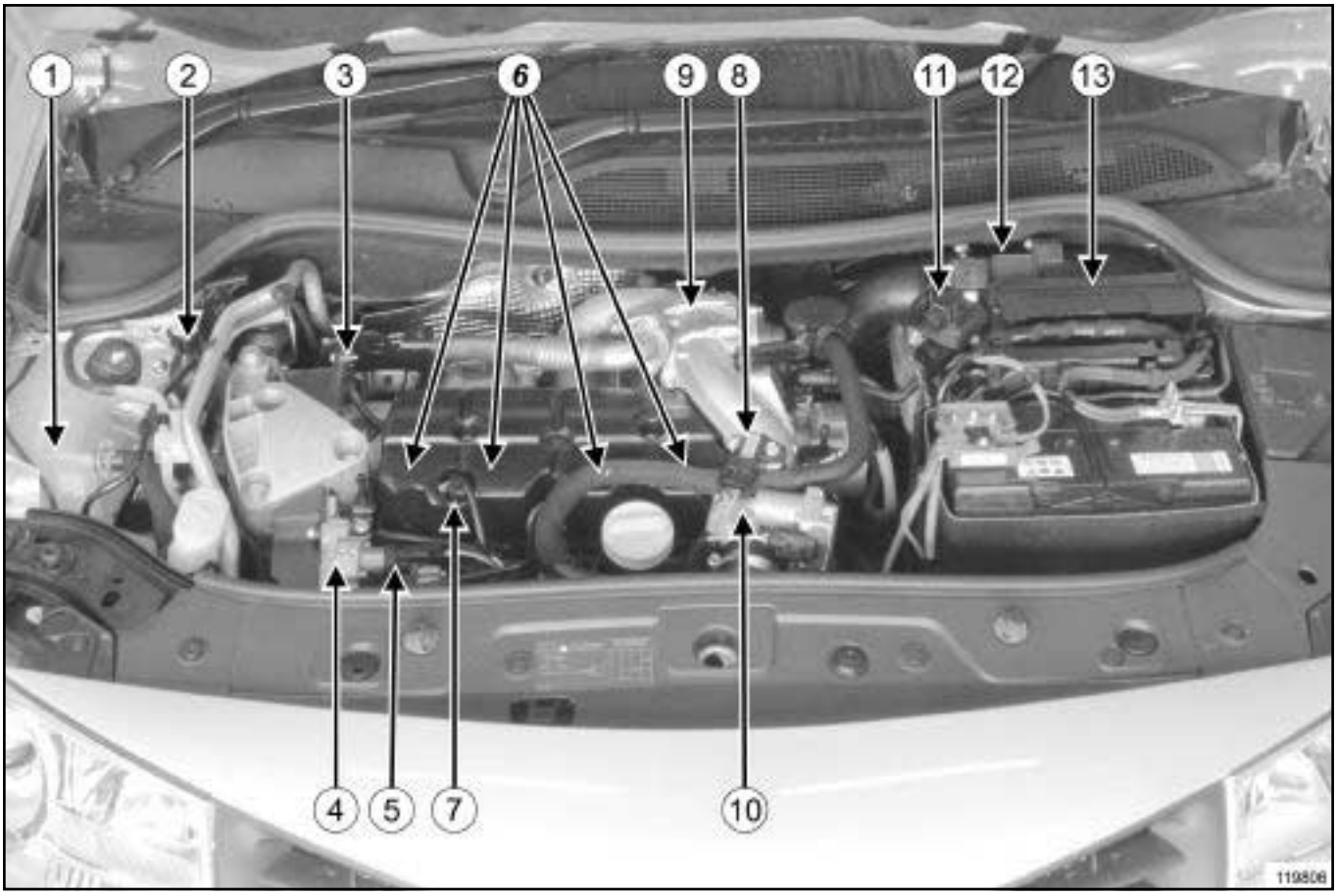

119806

(**1**)	Diesel filter
(**2**)	Manual priming pump
(**3**)	Camshaft sensor
(**4**)	High pressure pump
(**5**)	Fuel pressure regulator
(**6**)	Diesel injector
(**7**)	Rail pressure sensor
(**8**)	Turbocharging pressure sensor
(**9**)	Exhaust gas recirculation solenoid valve
(**10**)	Engine stop flap
(**11**)	Turbocharging pressure regulation solenoid valve
(**12**)	Flow sensor with integrated temperature sensor
(**13**)	Diesel injection computer

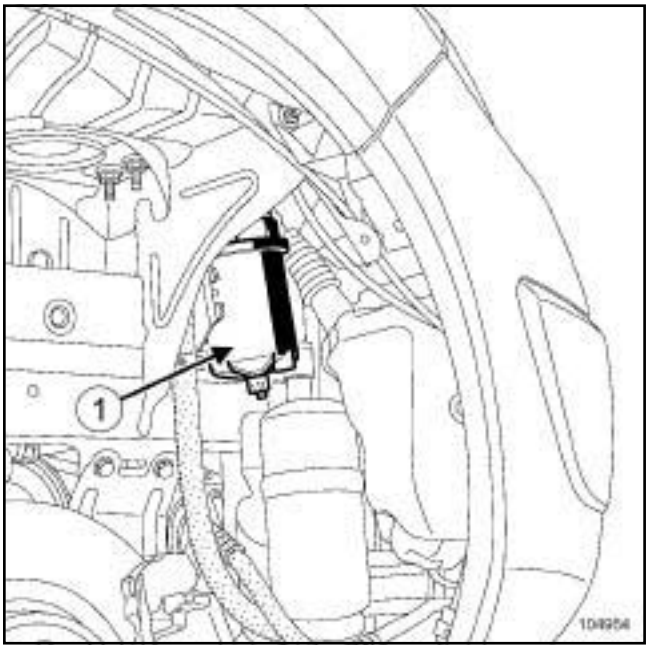

104954

(**1**) Diesel filter

B84 or C84 or G84 or S84, and F9Q, and 803 or 804 or 816 or 818

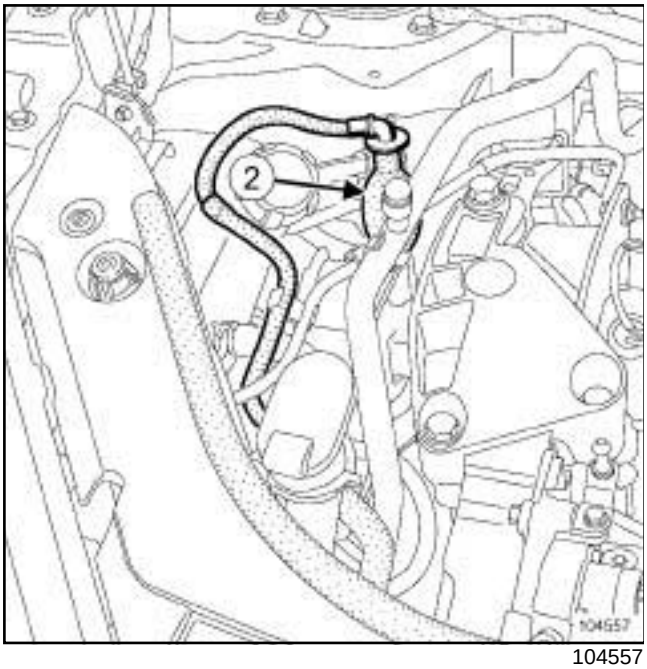

104557

(**2**) Manual priming pump

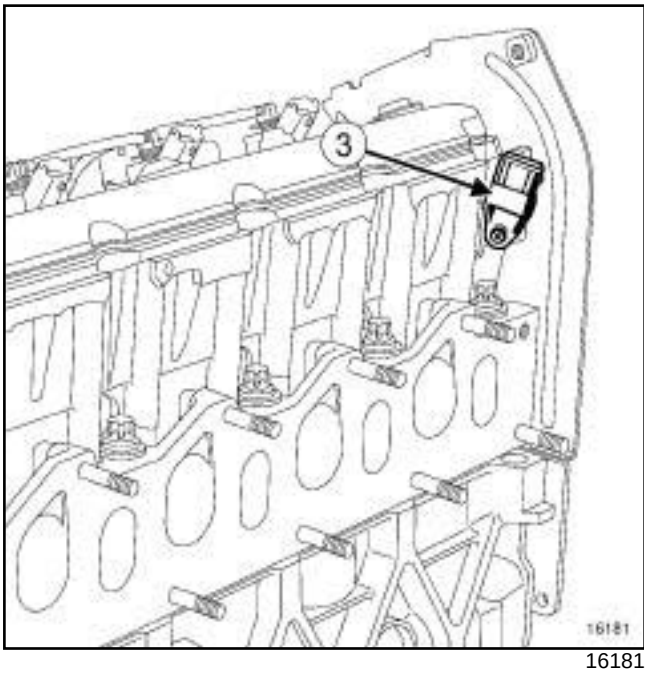

16181

(**3**) Camshaft sensor

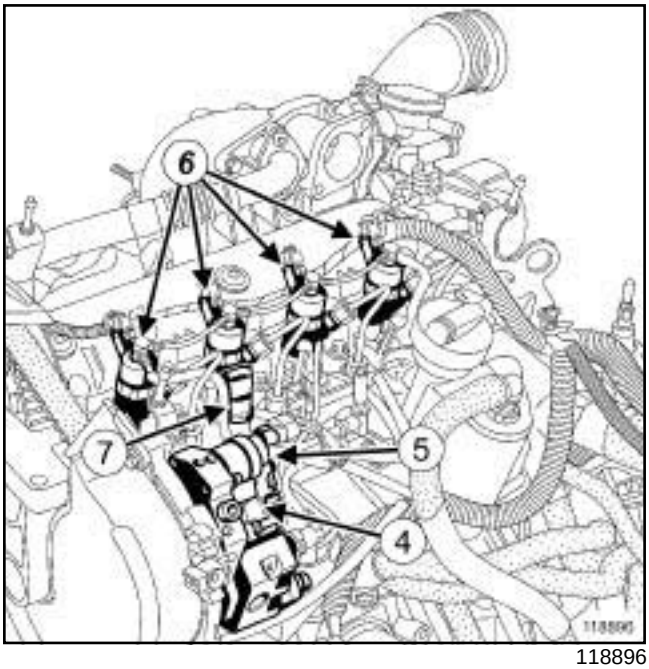

118896

(**4**) High pressure pump

(**5**) Fuel pressure regulator

(**6**) Diesel injectors

(**7**) Rail pressure sensor

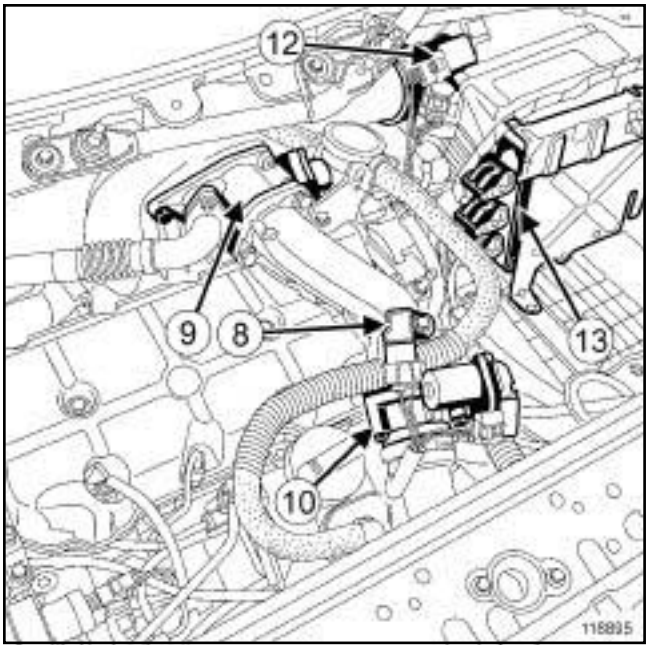

118895

(**8**) Turbocharging pressure sensor

(**9**) Exhaust gas recirculation solenoid valve

(**10**) Engine stop flap

B84 or C84 or G84 or S84, and F9Q, and 803 or 804 or 816 or 818

(**12**) Flow sensor with integrated air temperature sensor

(**13**) Diesel injection computer

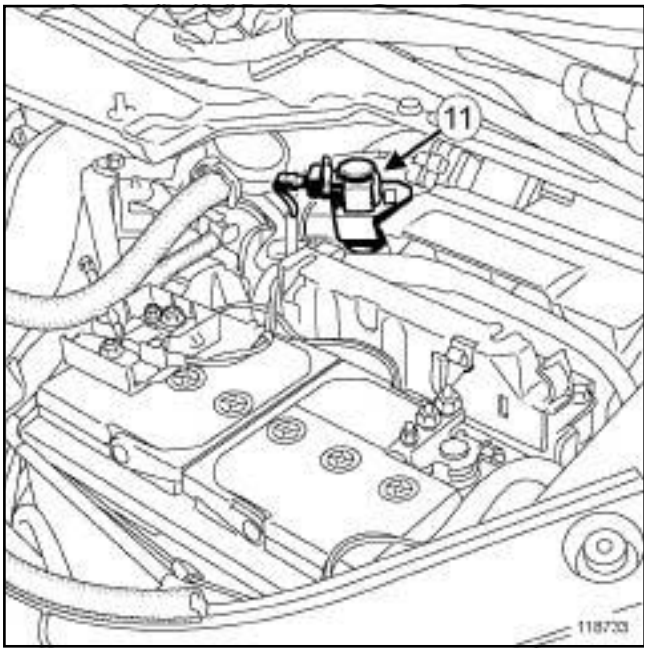

118733

(**11**) Turbocharging pressure regulation solenoid valve

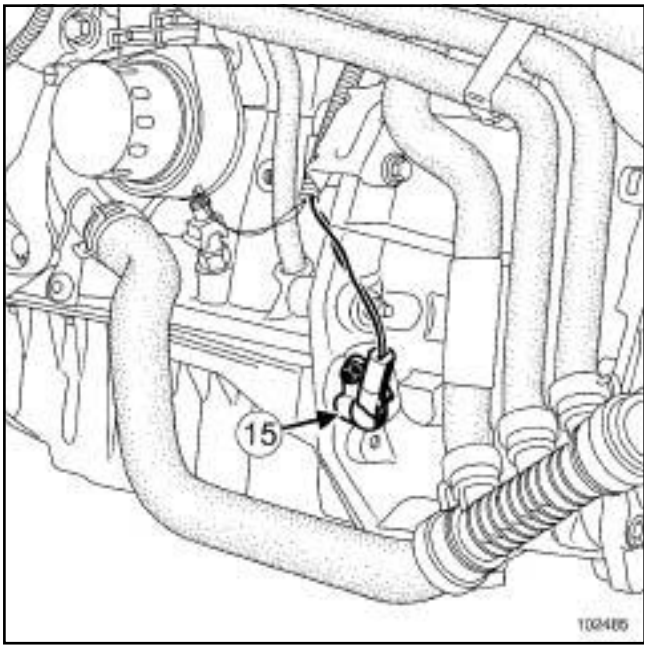

102485

(**15**) Crankshaft position sensor

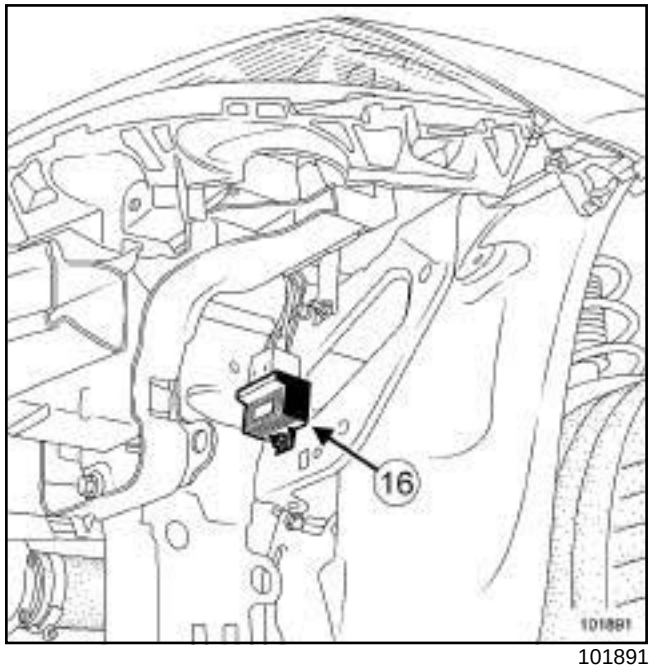

101891

(**16**) Pre-postheating unit

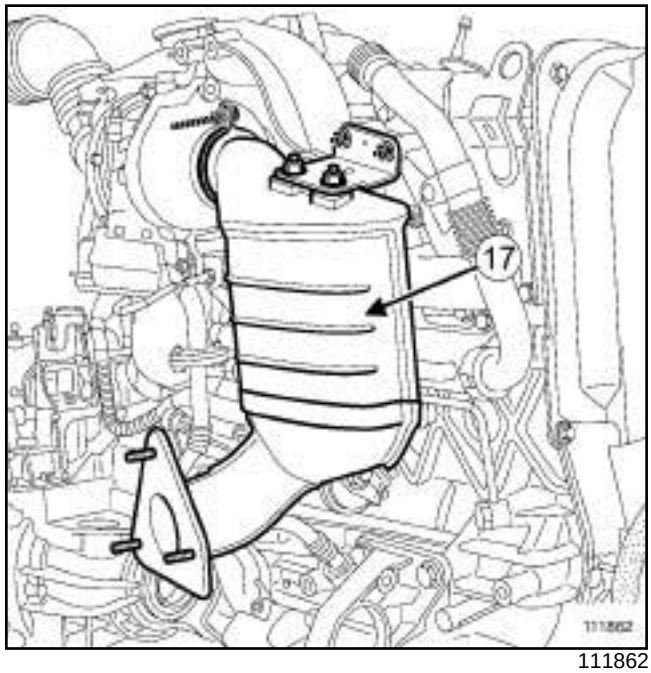

111862

(**17**) Catalytic pre-converter

B84 or C84 or G84 or S84, and F9Q, and 803 or 804 or 816 or 818

F9Q, and 803 or 804 or 816

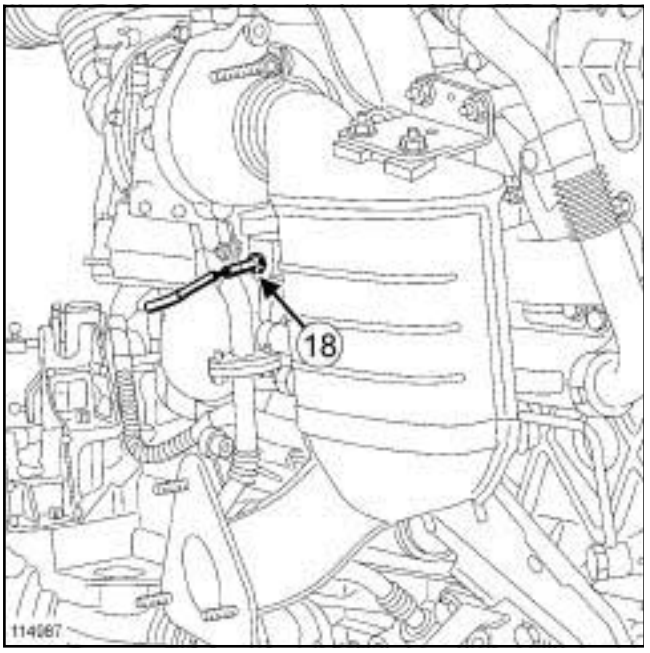

114987

(**18**) Exhaust gas temperature sensor upstream of the turbocharger

F9Q, and 818

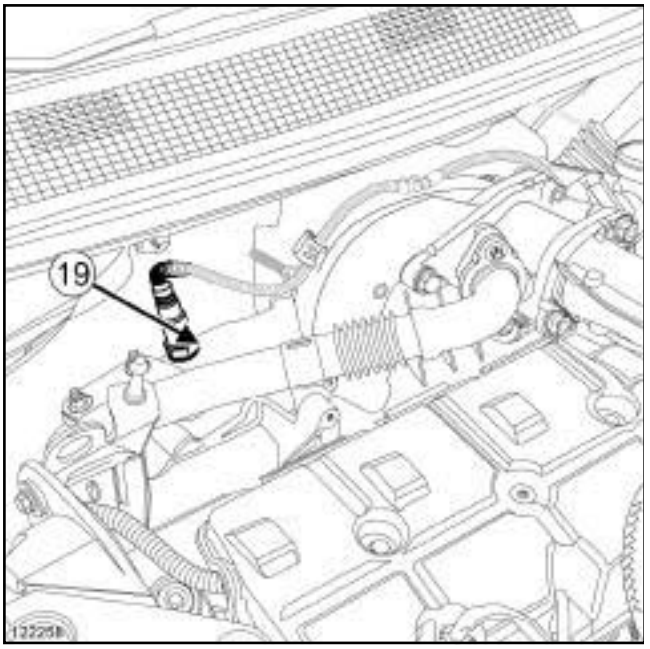

122258

(**19**) Oxygen sensor

Diesel injection: List and location of components

K9K, and 734

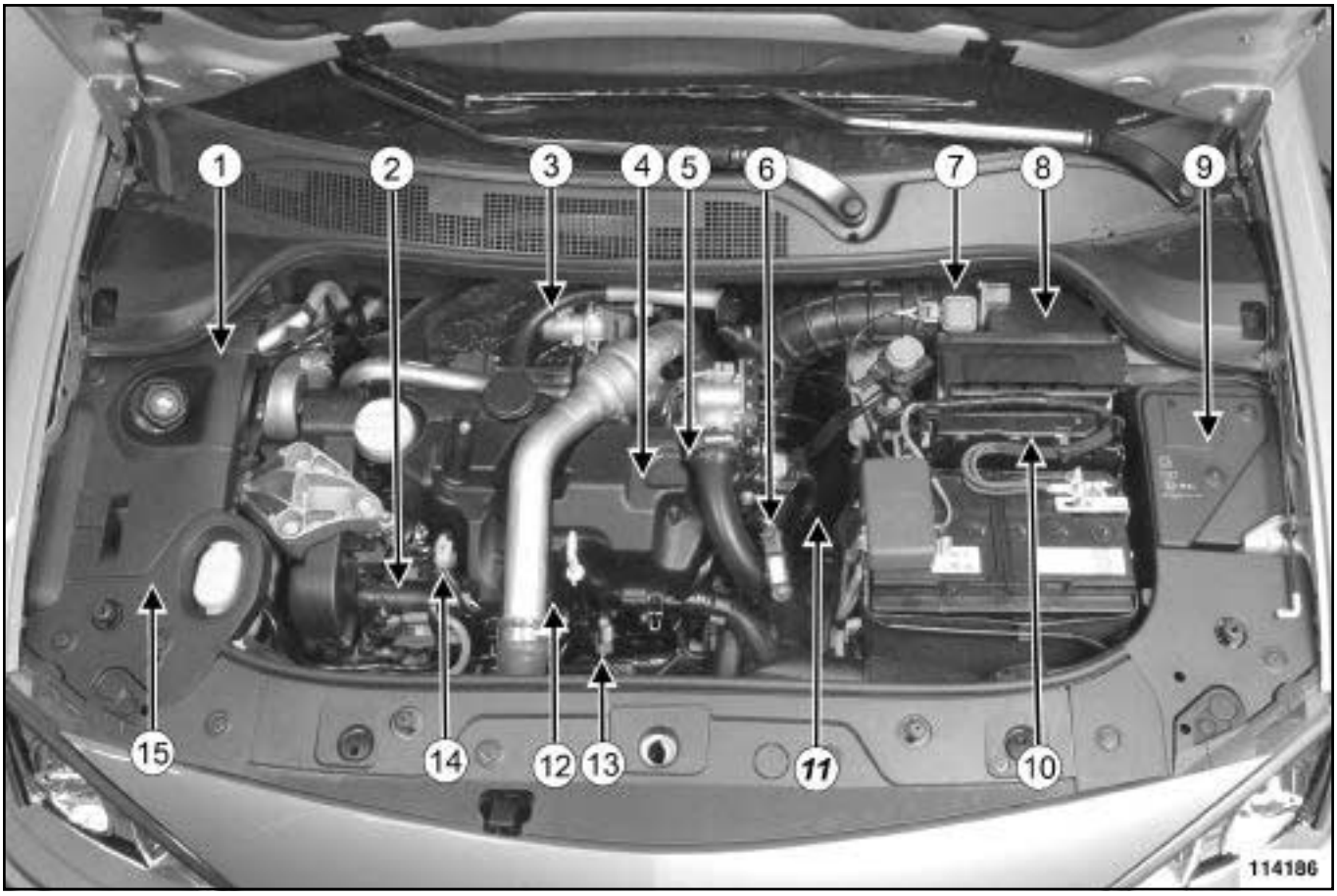

114186

(**1**)	Manual priming pump
(**2**)	High pressure pump
(**3**)	Exhaust gas recirculation solenoid valve
(**4**)	Diesel injectors
(**5**)	Camshaft position sensor
(**6**)	Turbocharging air pressure sensor
(**7**)	Air flowmeter
(**8**)	Air filter box
(**9**)	Engine accessories unit
(**10**)	Diesel injection computer
(**11**)	Coolant temperature sensor
(**12**)	Injector rail
(**13**)	Rail pressure sensor
(**14**)	Fuel temperature sensor
(**15**)	Fuel filter

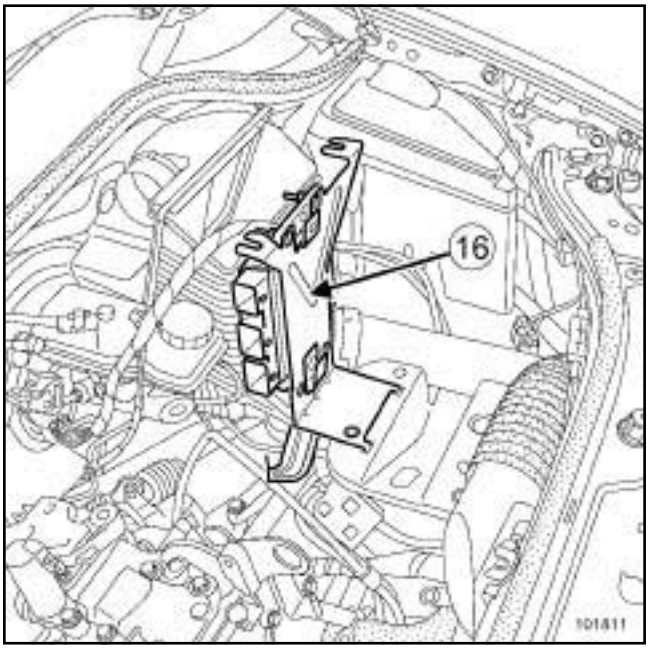

101811

(**16**) Diesel injection computer

K9K, and 734

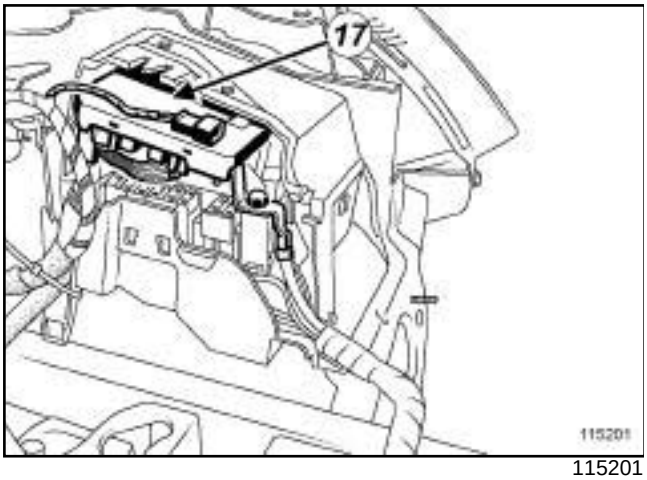

115201

(**17**) Engine accessories unit

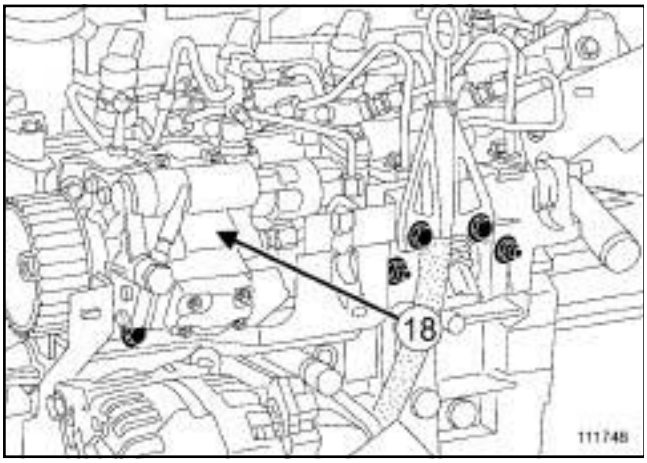

111748

(**18**) High pressure pump

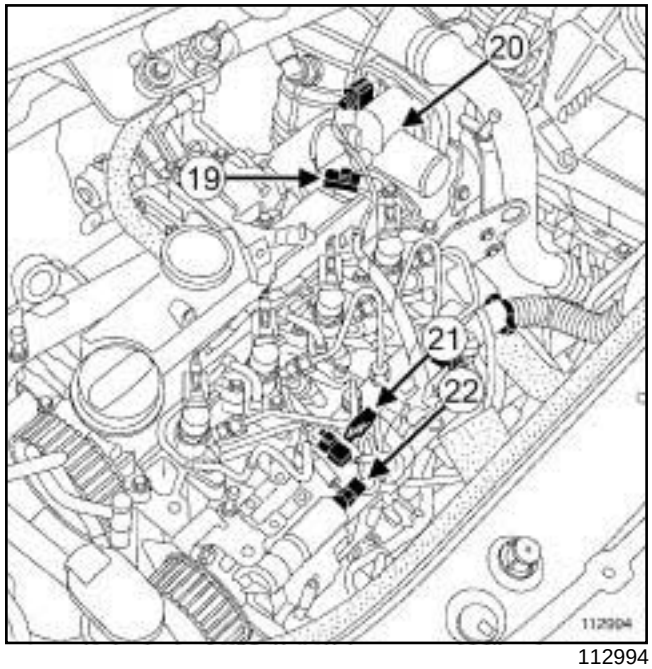

112994

(**19**) Camshaft position sensor

(**20**) Air inlet valve

(**22**) Pressure regulating solenoid valve

(**21**) Flow regulating solenoid valve

K9K, and 734

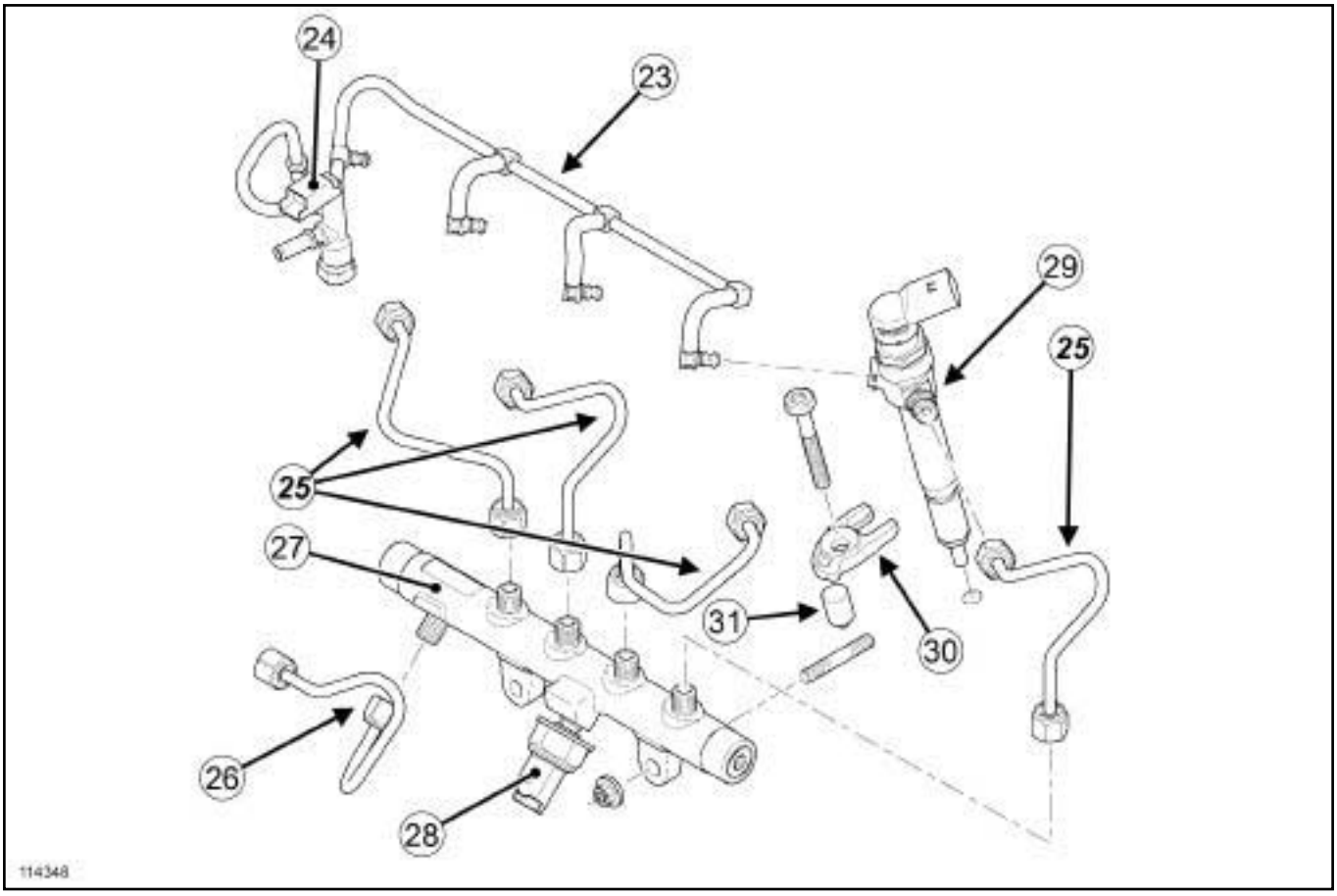

114348

(**23**)	Diesel return pipe
(**24**)	Fuel temperature sensor
(**25**)	High pressure pipe between the rail and injector
(**26**)	High pressure pipe between the pump and rail
(**27**)	Injector rail
(**28**)	Rail pressure sensor
(**29**)	Diesel injector
(**30**)	Diesel injector bracket
(**31**)	Diesel injector bracket spacer

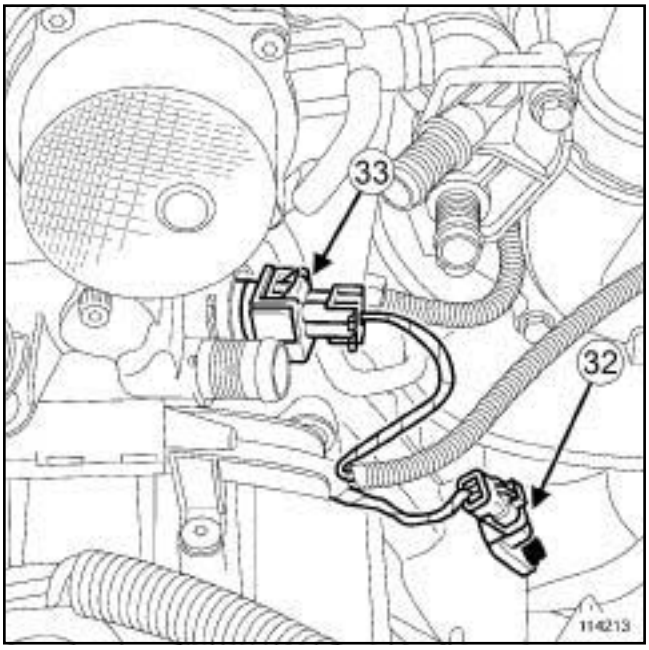

114213

(**32**)	Crankshaft position sensor
(**33**)	Coolant temperature sensor

K9K, and 734

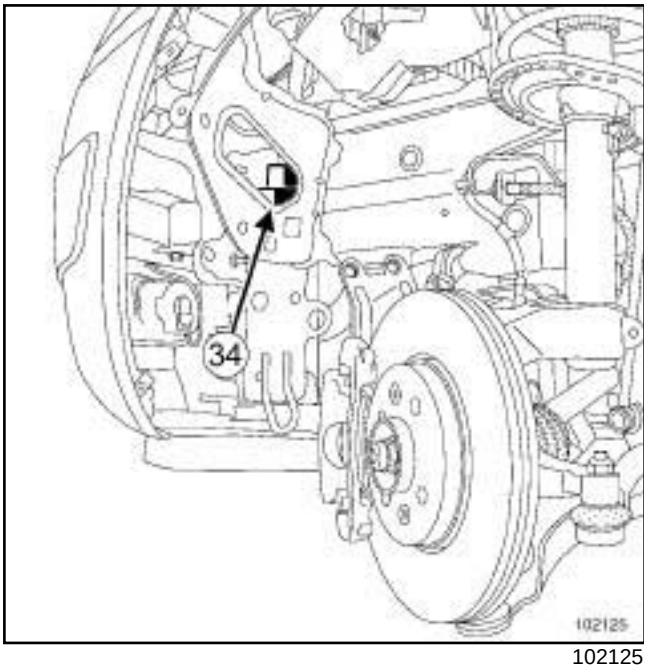

102125

(**34**) Pre-postheating unit

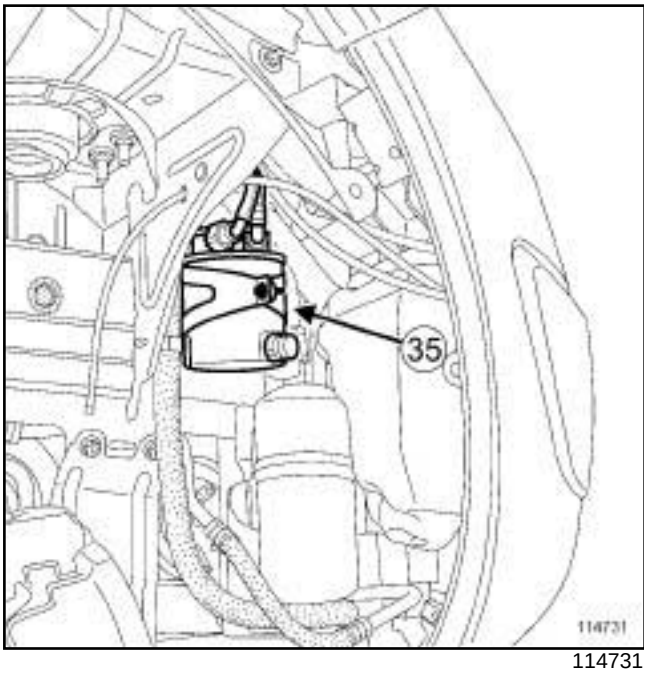

114731

(**35**) Fuel filter

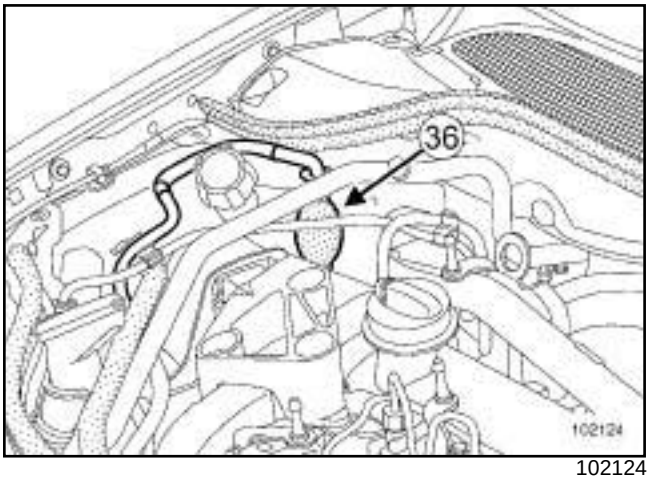

102124

(**36**) Manual priming pump

Diesel injection: List and location of components

K9K, and 724

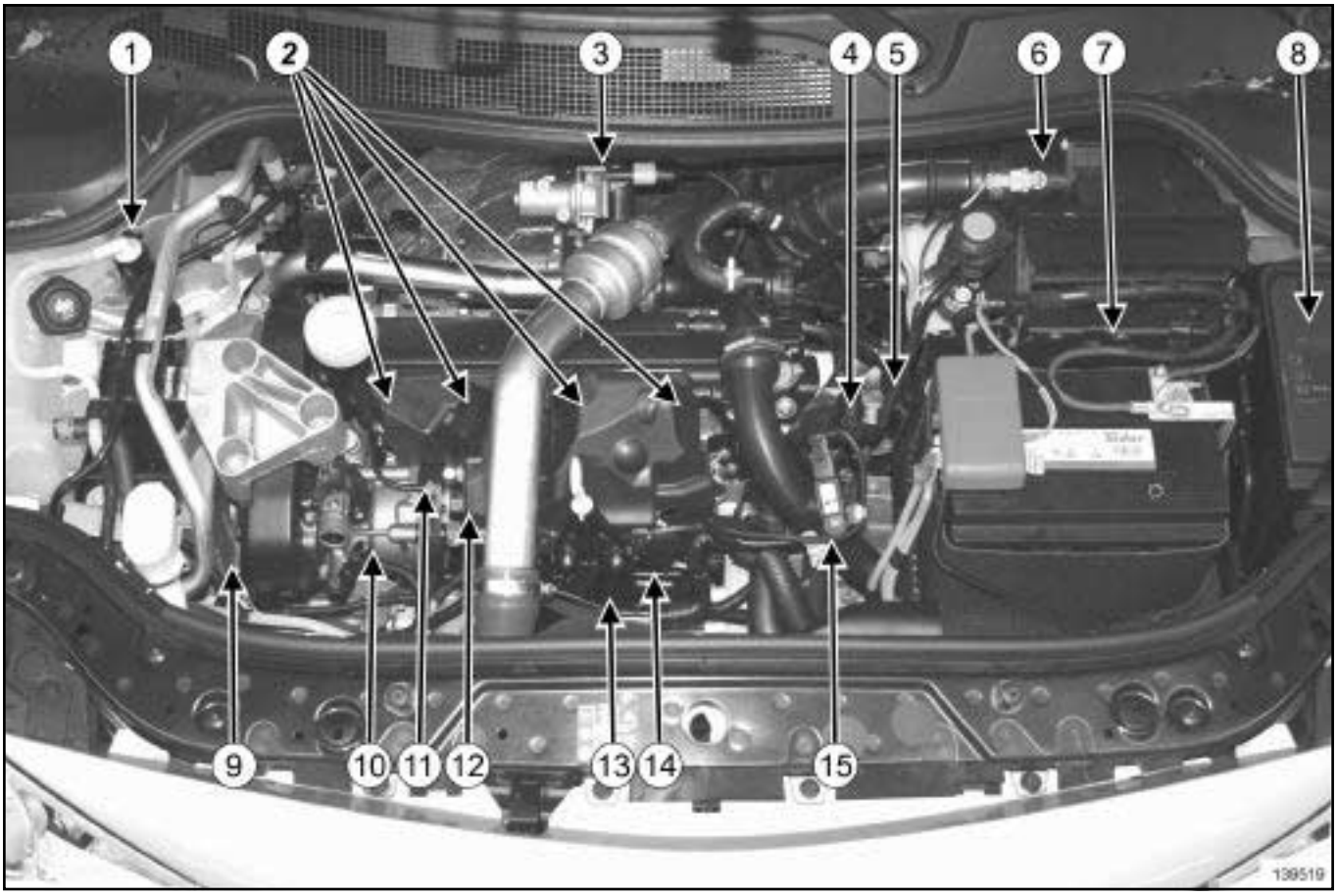

139519

(**1**)	Manual priming pump
(**2**)	Diesel injectors
(**3**)	Exhaust gas recirculation solenoid valve
(**4**)	Coolant temperature sensor
(**5**)	Crankshaft position sensor
(**6**)	Air flowmeter
(**7**)	Diesel injection computer
(**8**)	Protection and Switching Unit
(**9**)	Camshaft position sensor
(**10**)	High pressure pump
(**11**)	Fuel temperature sensor
(**12**)	Fuel flow actuator
(**13**)	Accelerometer
(**14**)	Injector rail pressure sensor
(**15**)	Turbocharging air pressure sensor

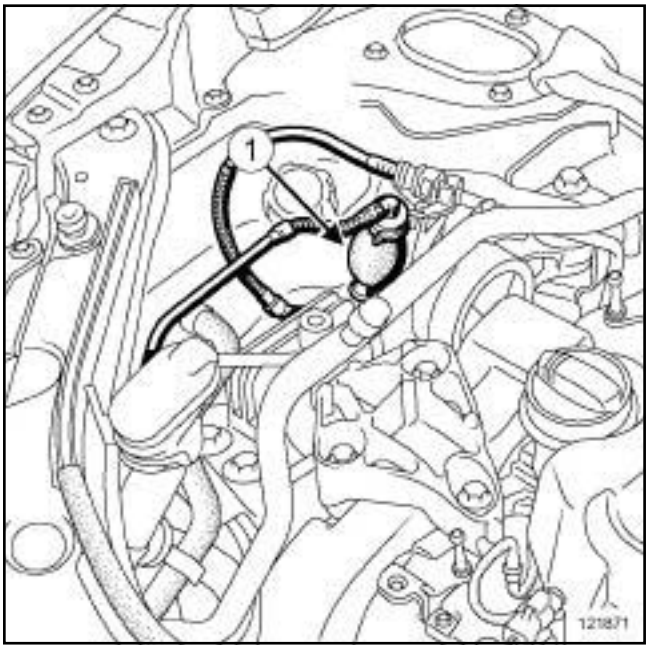

121871

(**1**) Manual priming pump

K9K, and 724

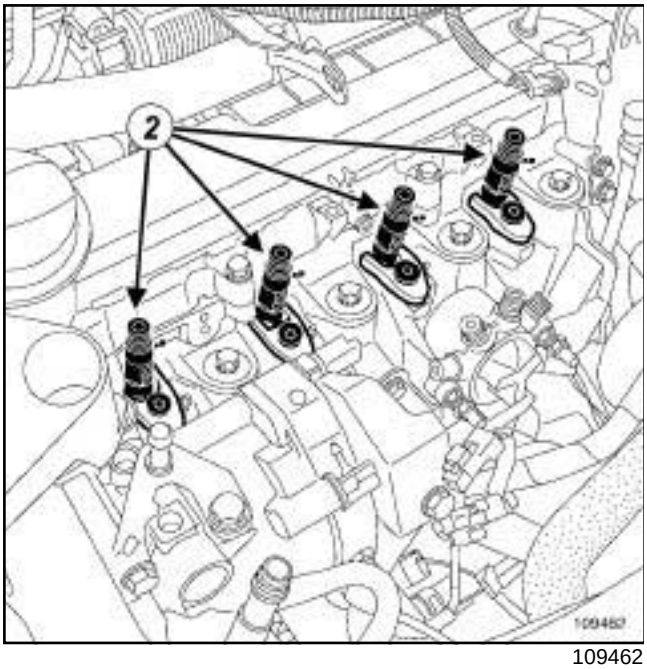

109462

(**2**) Diesel injectors

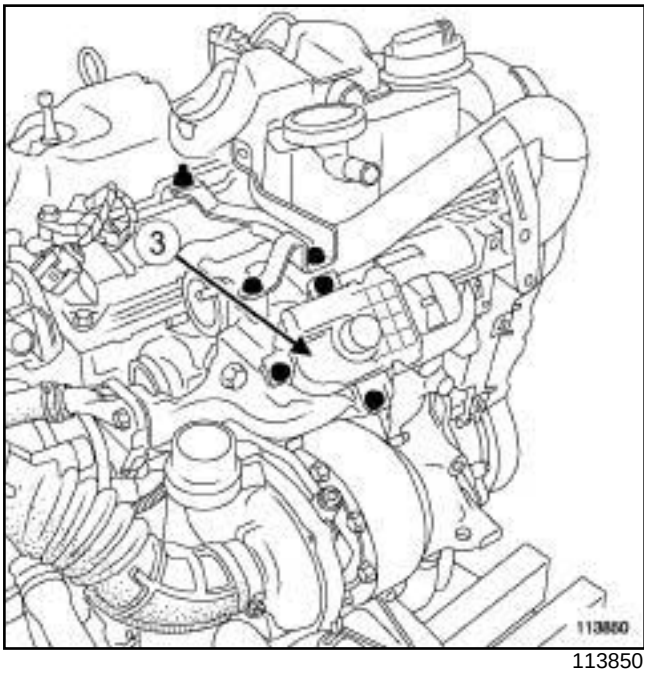

113850

(**3**) Exhaust gas recirculation solenoid valve

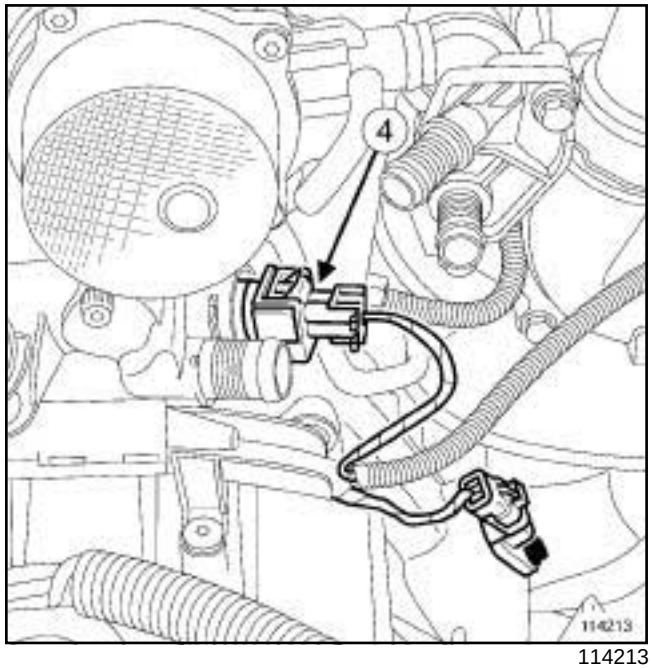

114213

(**4**) Coolant temperature sensor

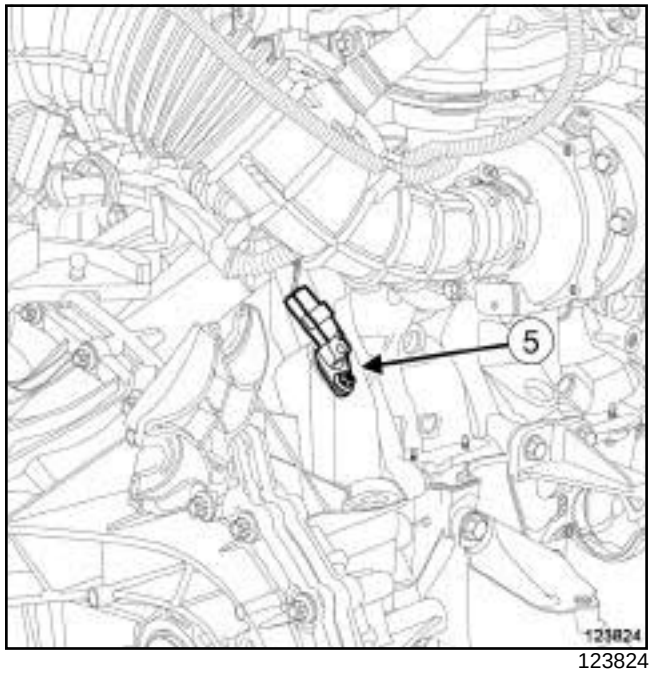

123824

(**5**) Crankshaft position sensor

K9K, and 724

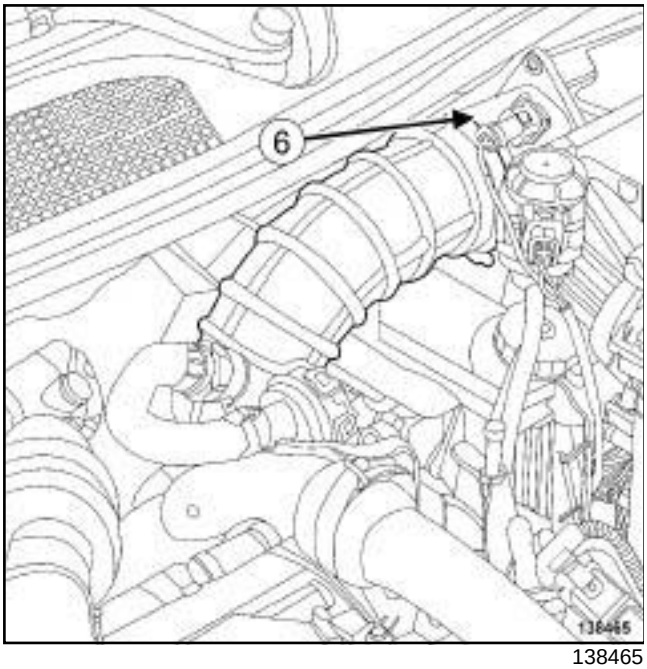

138465

(**6**) Air flowmeter

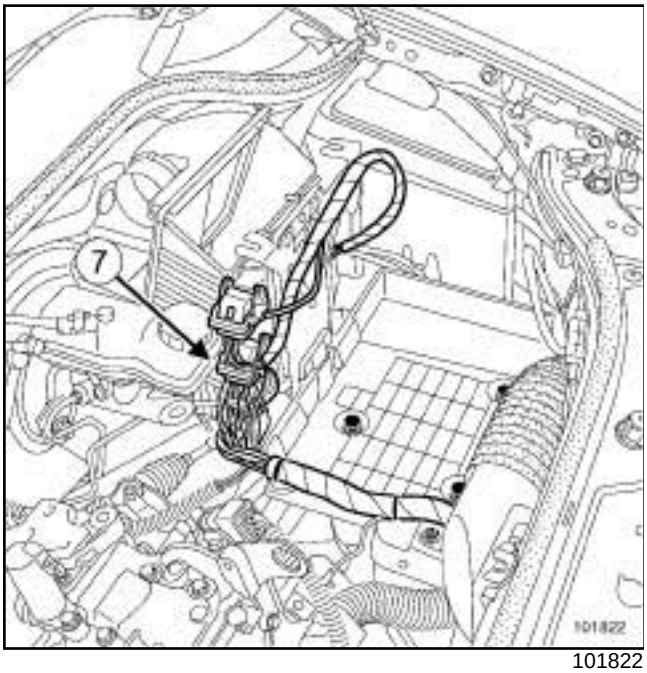

101822

(**7**) Diesel injection computer

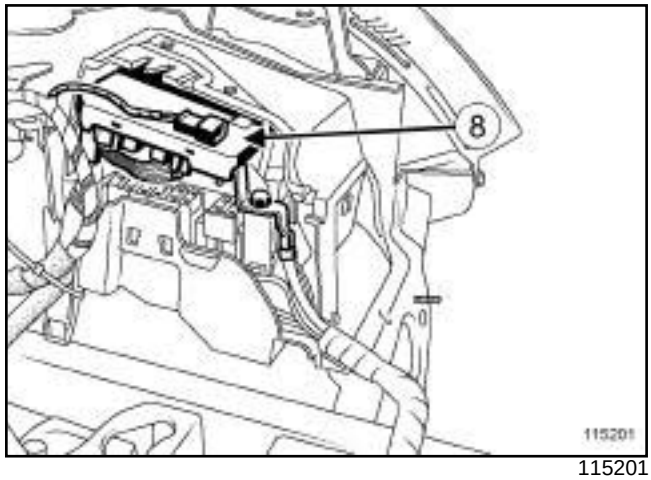

115201

(**8**) Protection and Switching Unit

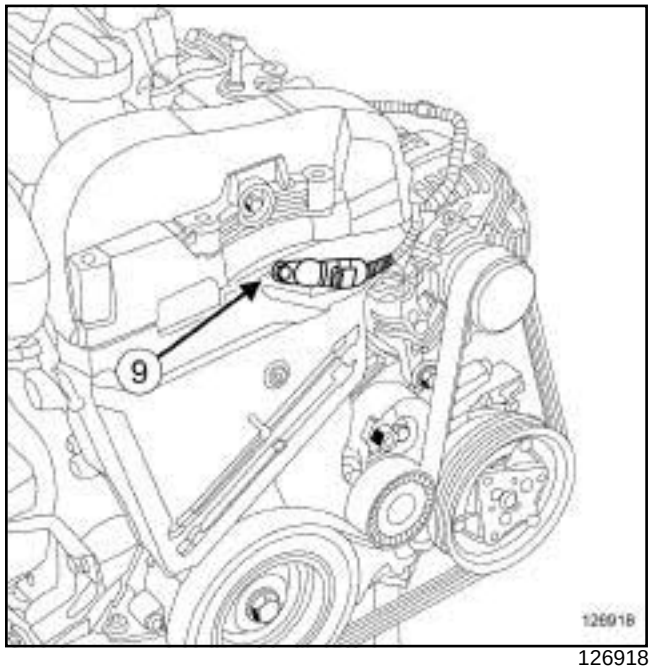

126918

(**9**) Camshaft position sensor

K9K, and 724

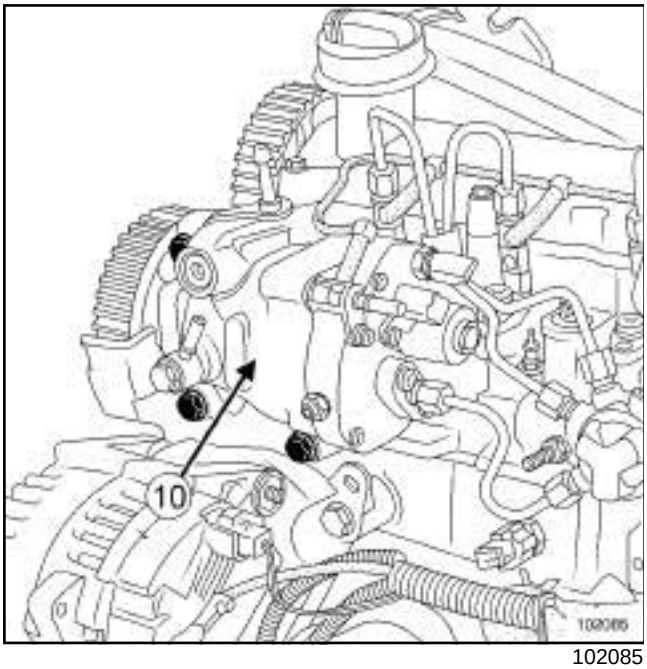

102085

(**10**) High pressure pump

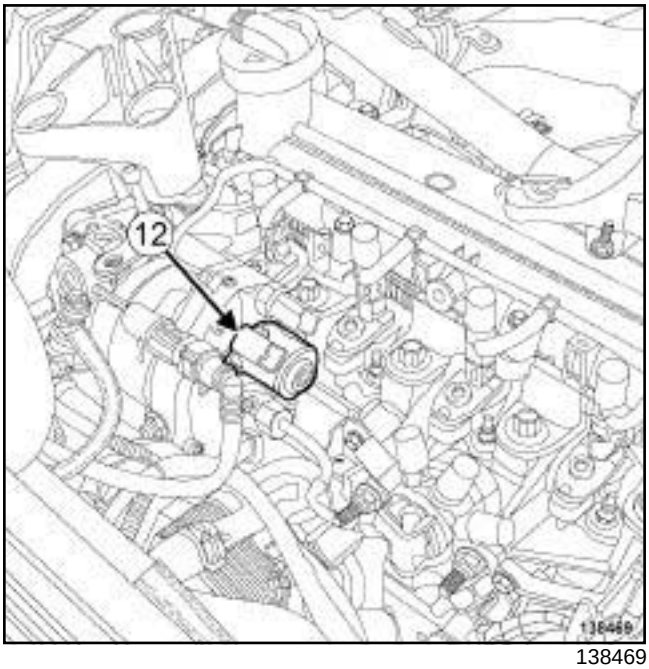

138469

(**12**) Fuel flow actuator

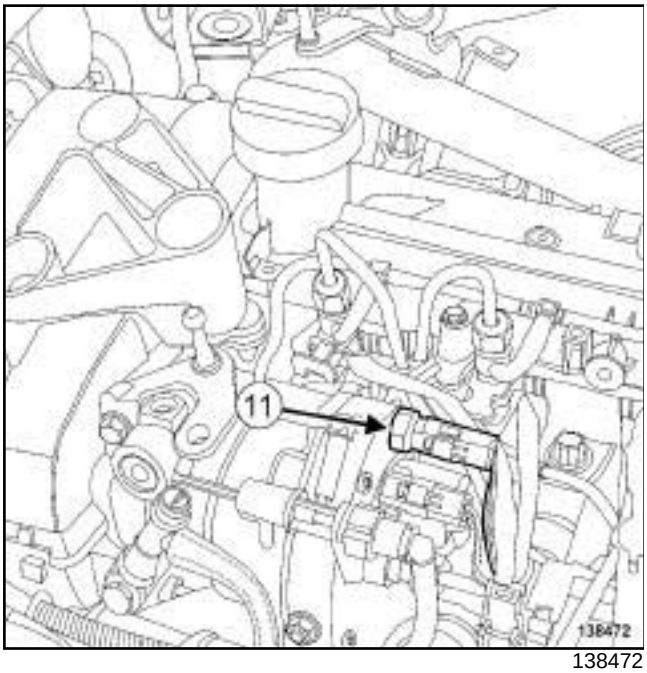

138472

(**11**) Fuel temperature sensor

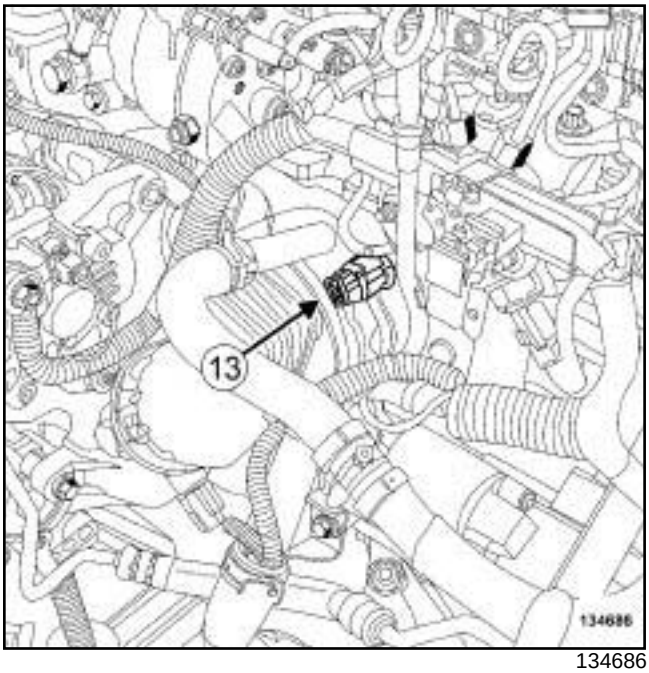

134686

(**13**) Accelerometer

K9K, and 724

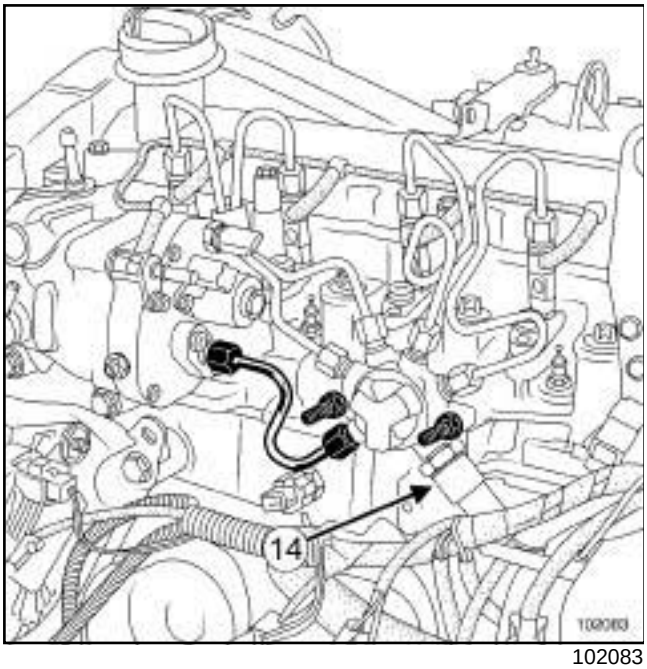

102083

(**14**) Injector rail pressure sensor

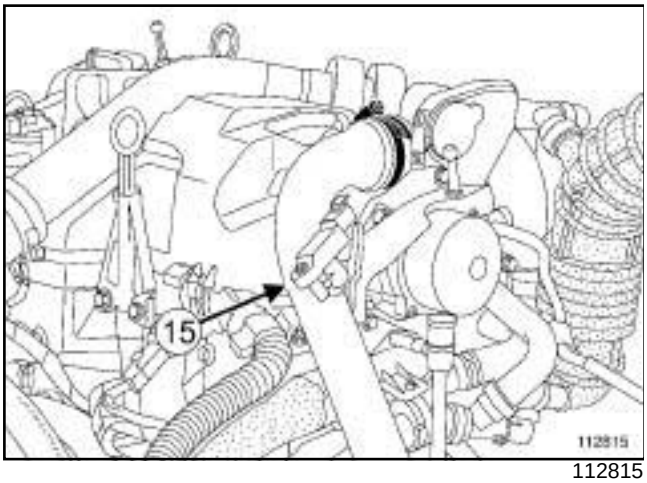

112815

(**15**) Turbocharging air pressure sensor

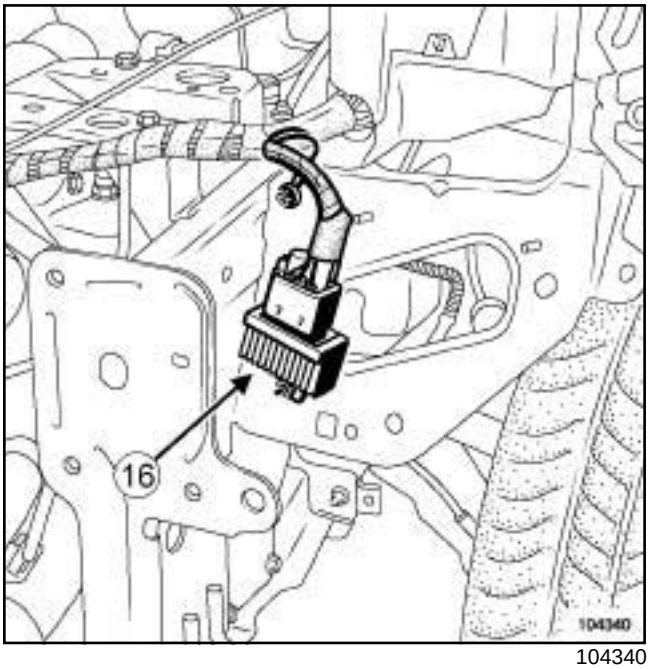

104340

(**16**) Pre-postheating unit

K9K – F9Q, and 803 or 804 or 818 – M9R

Tightening torques ▽	
injection computer mounting bolt	**21 N.m**

Note:

- The injection computer retains the immobiliser code for life.
- The system has no security code.
- It is forbidden to perform tests with computers borrowed from the Parts Department or from another vehicle if the computer must be returned. These computers are permanently coded.

If replacing the injection computer, save the data before replacing the injection computer (see **Fault finding - Replacement of components)** (13B, Diesel injection).

REMOVAL

I - REMOVAL PREPARATION OPERATION

❑ Remove the engine covers.

❑ Remove the battery (see **Battery: Removal - Refitting**) (80A, Battery).

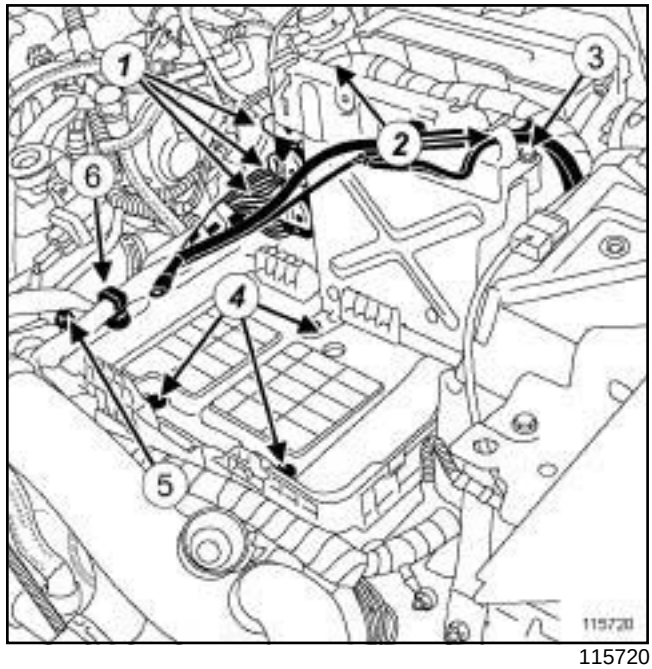

115720

❑ Disconnect the injection computer connectors (**1**) .

❑ Unclip:

- the wiring harness from the negative battery terminal,
- the wiring harness (**2**) .

❑ Remove:

- the upper bolt (**3**) from the injection computer mounting,
- the bolt (**4**) from the battery tray and the injection computer mounting,
- the nut (**5**) from the wiring harness.

❑ Unclip the wiring harness at (**6**) .

❑ Remove the injection computer with its mounting and the battery tray.

K9K – F9Q, and 803 or 804 or 818 – M9R

II - REMOVAL OPERATION FOR THE DIESEL INJECTION COMPUTER

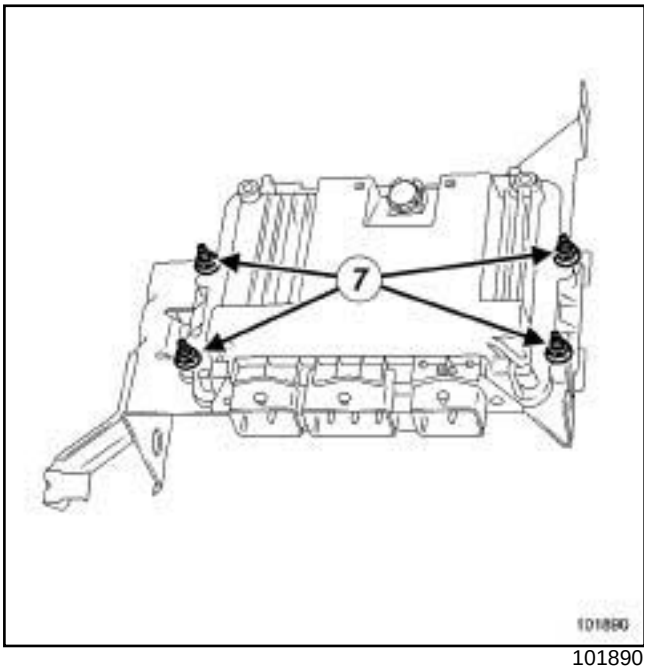

101890

❑ Remove:

- the injection computer nuts (**7**) ,
- the injection computer from its mounting.

REFITTING

I - REFITTING OPERATION FOR THE DIESEL INJECTION COMPUTER

❑ Refit:

- the injection computer to its mounting,
- the injection computer nuts.

II - FINAL OPERATION

❑ Refit the injection computer mounting bolt.

❑ Torque tighten the **injection computer mounting bolt (21 N.m)**.

❑ Refit the injection computer mounting upper bolt.

❑ Refit the battery tray (see **Battery tray: Removal - Refitting**) (80A, Battery).

❑ Clip on:

- the wiring harness from the negative battery terminal,
- the wiring harness.

F9Q, and 818

❑

WARNING

Do not use any product designed to improve the electrical contact in the injection computer and oxygen sensor connectors or on the bodies of the oxygen sensors.

Failure to respect this advice causes the oxygen sensor to malfunction and results in failure to comply with the emission control standard.

WARNING

If the connections are corroded, repair the wiring (see **Wiring: Precautions for repair**)(Technical Note 6015A, 88A, Wiring).

❑ Connect the injection computer connectors.

❑ Refit the battery (see **Battery : Removal - Refitting**) (80A, Battery).

❑ Refit the engine covers.

❑ If replacing the injection computer, enter the saved data into the new injection computer (see **Fault finding - Replacement of components)** (13B, Diesel injection).

F9Q, and 800 or 808

Essential equipment
diagnostic tool

Tightening torques ▽	
battery tray bolts	**21 N.m**

When replacing the computer, save the data before replacing the computer (see **MR 366 Fault finding, 13B, Diesel injection, Fault finding - Replacement of components**).

REMOVAL

I - REMOVAL PREPARATION OPERATION

❑ Remove:

- the engine covers,
- the battery (see **80A, Battery, Battery, Removal - Refitting**).

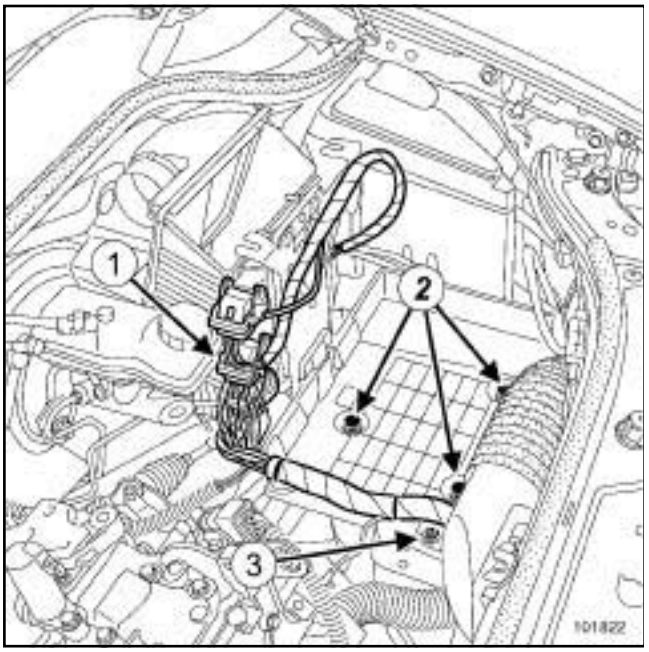

101822

❑ Disconnect the injection computer connectors (**1**) .

❑ Remove:

- the battery tray bolts (**2**) ,
- the wiring harness bracket (**3**) .

❑ Unclip the wiring harness from the battery tray.

❑ Remove the battery tray.

II - OPERATION FOR REMOVAL OF PART CONCERNED

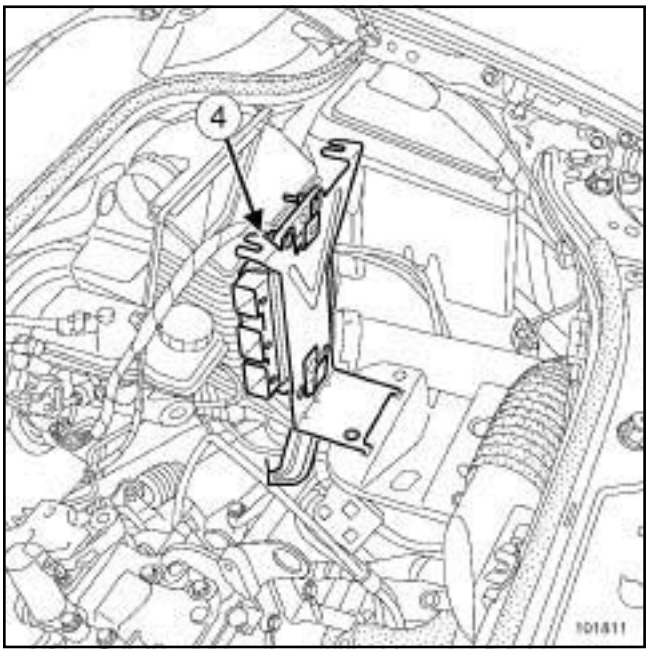

101811

❑ Remove the injection computer and its mounting (**4**) .

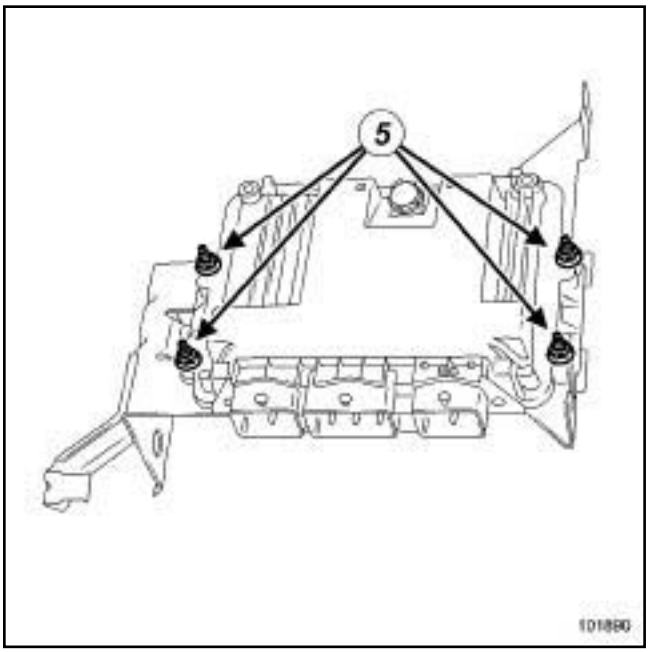

101890

❑ Remove:

- the injection computer bolts (**5**) ,
- the injection computer from its mounting.

F9Q, and 800 or 808

I - REFITTING OPERATION FOR PART CONCERNED

❏ Refit:

- the injection computer to its mounting,
- the injection computer bolts,
- the injection computer with its mounting.

II - FINAL OPERATION

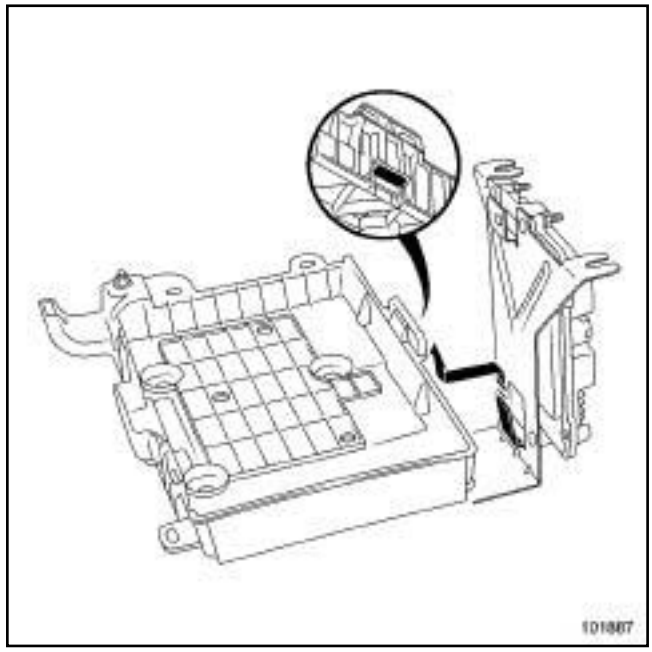

101887

❏ Refit the battery tray.

❏ Make sure you refit the battery tray correctly on the injection computer mounting.

❏ Clip the wiring harness to the battery tray.

❏ Refit:

- the wiring harness bracket,
- the battery tray bolts,

❏ Torque tighten the **battery tray bolts (21 N.m)**.

❏ Connect the injection computer connectors.

❏ Refit the battery (see **80A, Battery, Battery: Removal - Refitting**).

❏ When replacing the computer, enter the data after replacing the computer (see **MR 366 Fault finding, 13B, Diesel injection, Fault finding - Replacement of components**).

❏ Switch on the ignition and read the fault codes using the **diagnostic tool**.

❏ If necessary, repair the faults indicated.

❏ Clear the faults.

❏ Refit the engine covers.

B84 or C84 or E84 or K84 or L84, and M9R

REMOVAL

I - REMOVAL PREPARATION OPERATION

❏ Remove the front engine cover.

❏ Disconnect the battery (see **Battery: Removal - Refitting**) (MR 364, 80A, Battery).

II - OPERATION FOR REMOVAL OF PART CONCERNED

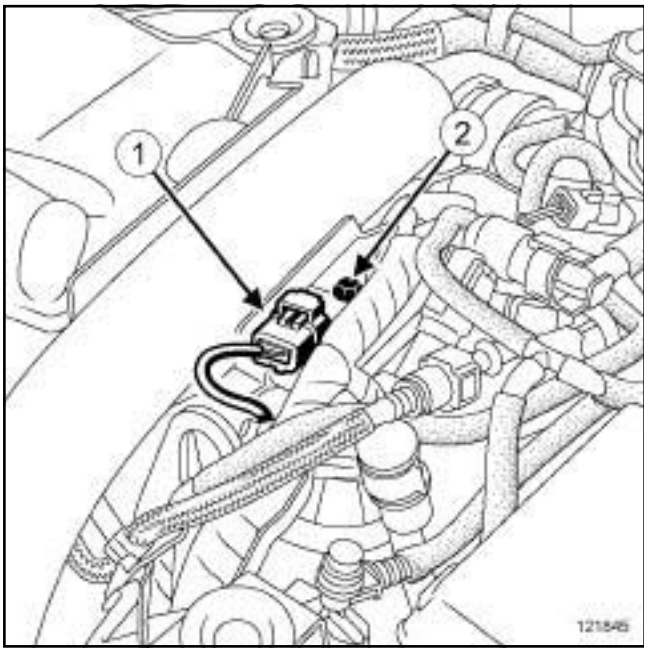

121845

❏ Disconnect the connector (**1**) from the camshaft position sensor.

❏ Remove:

- the bolt (**2**) from the camshaft position sensor,
- the camshaft position sensor.

REFITTING

I - REFITTING PREPARATIONS OPERATION

❏ Replace the camshaft position sensor O-ring if the sensor is being reused.

❏ Lubricate the camshaft position sensor O-ring with engine oil.

II - REFITTING OPERATION FOR PART CONCERNED

❏ Refit:

- the camshaft position sensor,
- the camshaft position sensor bolt.

❏ Connect the camshaft position sensor connector.

III - FINAL OPERATION.

❏ Connect the battery (see **Battery: Removal - Refitting**) (MR 364, 80A, Battery).

❏ Refit the engine cover.

K9K, and 732 or 734

Tightening torques ▽	
camshaft position sensor bolt	**8 Nm**
intercooler outlet air pipe clip	**5.5 Nm**

REMOVAL

I - REMOVAL PREPARATION OPERATION

❑ Remove the front engine cover.

❑ Disconnect the battery (see **Battery: Removal - Refitting**) (MR 364, 80A, Battery).

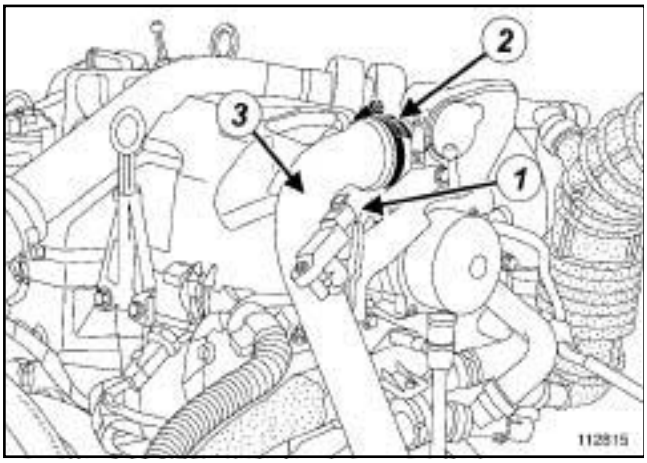

112815

❑ Disconnect the connector (**1**) from the inlet air pressure sensor.

❑ Unpick the wiring harness from the air inlet pressure sensor.

❑ Undo the intercooler outlet air pipe clip (**2**) on the damper valve side.

❑ Remove the intercooler air outlet pipe (**3**) on the damper valve side.

II - OPERATION FOR REMOVAL OF PART CONCERNED

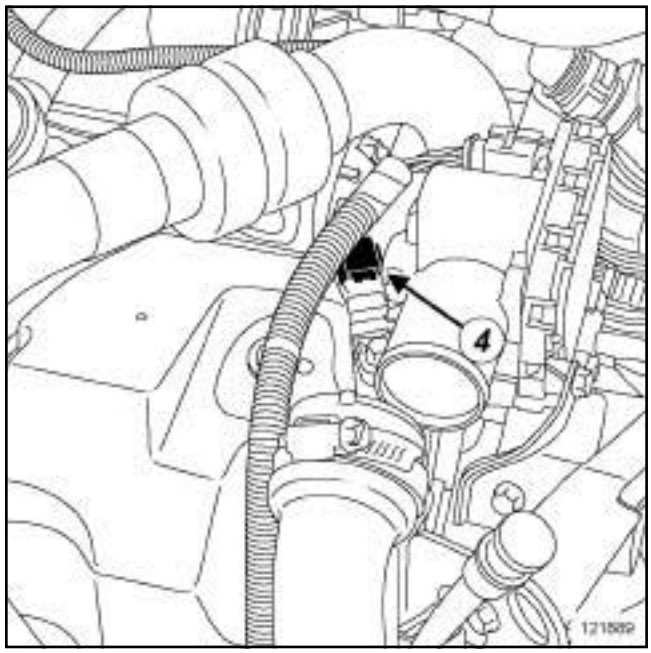

121889

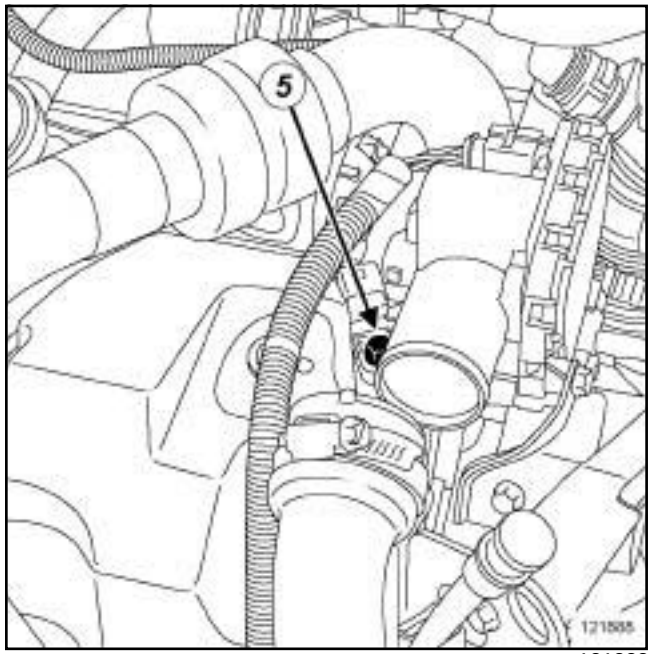

121888

❑ Disconnect the connector (**4**) from the camshaft position sensor.

❑ Remove:

- the bolt (**5**) from the camshaft position sensor,
- the camshaft position sensor.

K9K, and 732 or 734

REFITTING

I - REFITTING PREPARATIONS OPERATION

If the camshaft position sensor is to be reused

- ❑ Remove the camshaft position sensor seal.
- ❑ Refit the new camshaft position sensor seal.
- ❑ Lubricate the camshaft position sensor seal.

II - REFITTING OPERATION FOR PART CONCERNED

- ❑ Refit:
  - the camshaft position sensor,
  - the camshaft position sensor bolt.
- ❑ Torque tighten the **camshaft position sensor bolt (8 Nm)**.
- ❑ Connect the camshaft position sensor connector.

III - FINAL OPERATION.

- ❑ Refit the intercooler outlet air pipe clip on the damper valve.
- ❑ Torque tighten the **intercooler outlet air pipe clip (5.5 Nm)**.
- ❑ Connect the air inlet pressure sensor connector.
- ❑ Clip on the air inlet pressure sensor wiring harness.
- ❑ Connect the battery (see **Battery : Removal - Refitting**) (MR 364, 80A, Battery).
- ❑ Refit the engine cover.

K9K, and 722 or 724 or 728 or 729

Essential special tooling	
Mot. 1672	Lower engine support.

REMOVAL

I - REMOVAL PREPARATION OPERATION

❑ Position the vehicle on a two-post lift (see **Vehicle: Towing and lifting**) (02A, Lifting equipment).

❑ Remove:

- the engine undertray bolts,
- the engine undertray,
- the lower engine tie-bar (see **19D**, **Engine mounting**, **Lower engine tie-bar: Removal - Refitting**, page **19D-36**) .

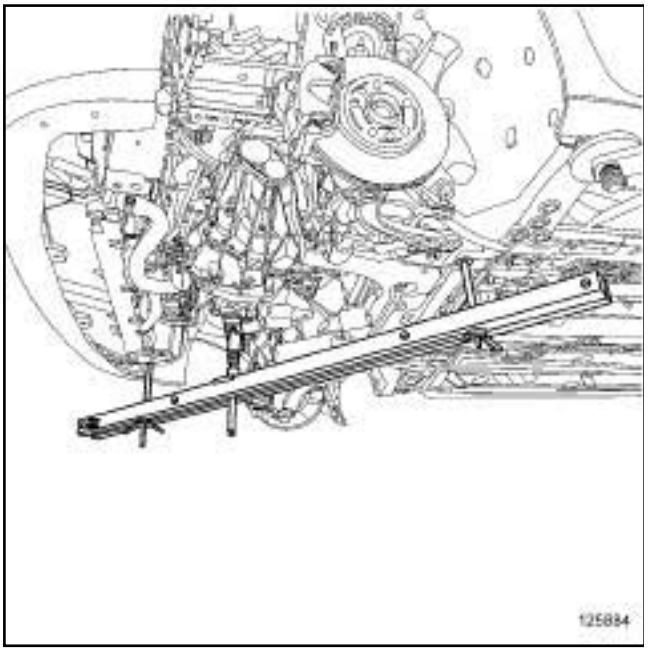

125884

❑ Fit the **(Mot. 1672)**.

❑ Remove the right-hand suspended engine mounting (see **19D**, **Engine mounting**, **Right-hand suspended engine mounting: Removal - Refitting**, page **19D-20**) .

II - OPERATION FOR REMOVAL OF PART CONCERNED

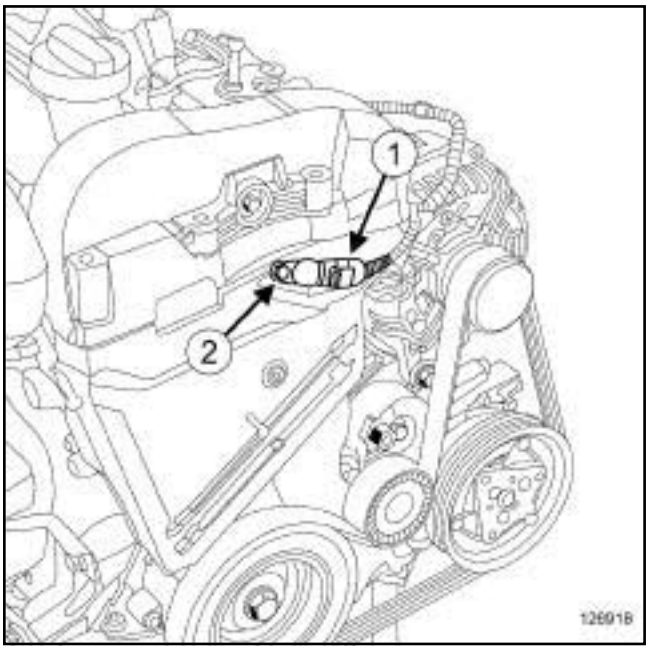

126918

❑ Disconnect the connector (**1**) from the camshaft position sensor.

❑ Remove:

- the bolt (**2**) from the camshaft position sensor,
- the camshaft position sensor.

REFITTING

I - REFITTING PREPARATION OPERATION

❑ **parts always to be replaced: camshaft sensor seal (11,11,04,02)**.

❑ Lubricate the camshaft position sensor seal.

II - REFITTING OPERATION FOR PART CONCERNED

❑ Refit:

- a new camshaft position sensor seal,
- the camshaft position sensor.

❑ Connect the camshaft position sensor connector.

III - FINAL OPERATION

❑ Refit the right-hand suspended engine mounting (see **19D**, **Engine mounting**, **Right-hand suspended engine mounting: Removal - Refitting**, page **19D-20**) .

❑ Remove the **(Mot. 1672)**.

K9K, and 722 or 724 or 728 or 729

❑ Refit:

- the lower engine tie-bar (see **19D**, **Engine mounting**, **Lower engine tie-bar: Removal - Refitting**, page **19D-36**) ,
- the engine undertray.

B84 or C84 or E84 or K84 or L84, and M9R

Tightening torques ▽	
crankshaft position sensor bolt	**10 N.m**
reinforcement lower cross member nuts	**62 N.m**

REMOVAL

I - REMOVAL PREPARATION OPERATION

❑ Position the vehicle on a two-post lift (see **Vehicle: Towing and lifting**) (MR 364, 02A, Lifting equipment).

❑ Disconnect the battery (see **Battery: Removal - Refitting**) (MR 364, 80A, Battery).

❑ Remove:

- the engine undertray bolts,
- the engine undertray.

M9R, and 724

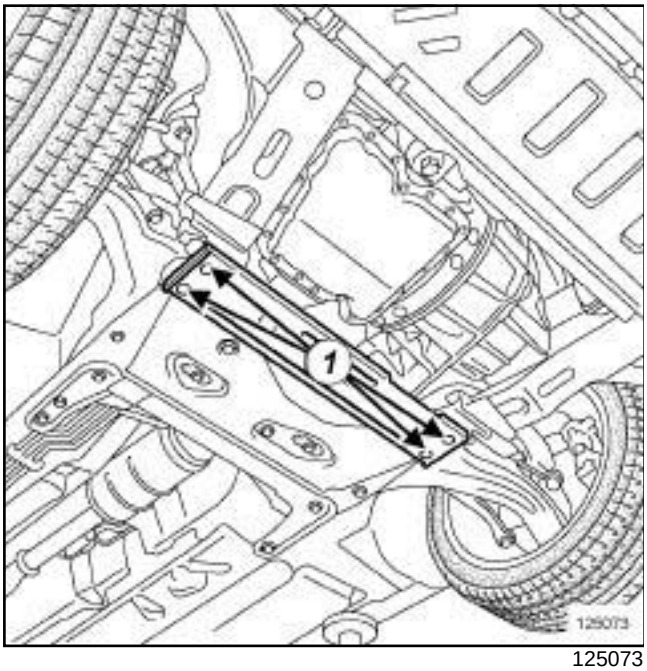

125073

❑ Remove:

- the reinforcement lower cross member nuts (**1**) ,
- the reinforcement lower cross member.

M9R, and 722 or 724

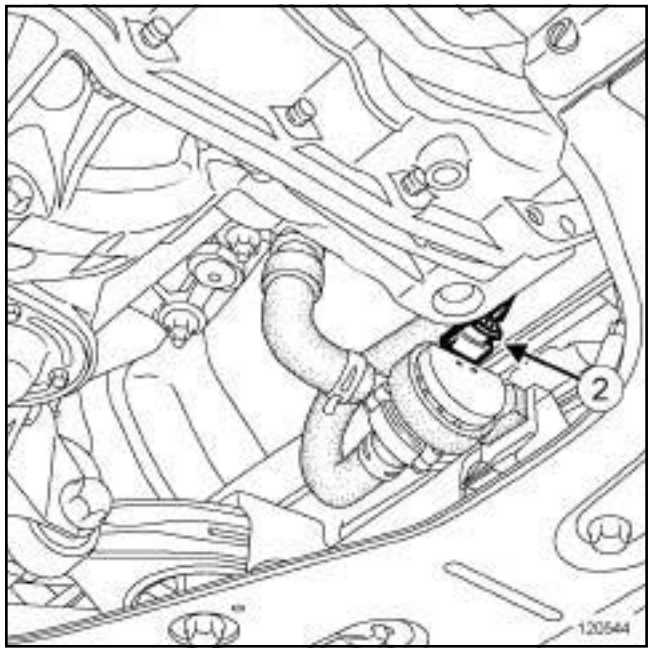

120544

❑ Disconnect the electric coolant pump (**2**) connector.

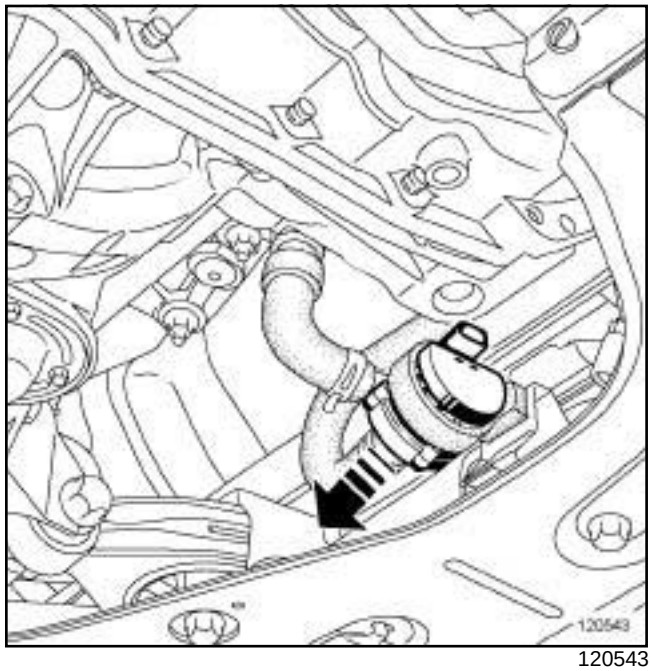

120543

❑ Remove the electric coolant pump from its mounting.

B84 or C84 or E84 or K84 or L84, and M9R

II - REMOVAL OPERATION FOR PART CONCERNED

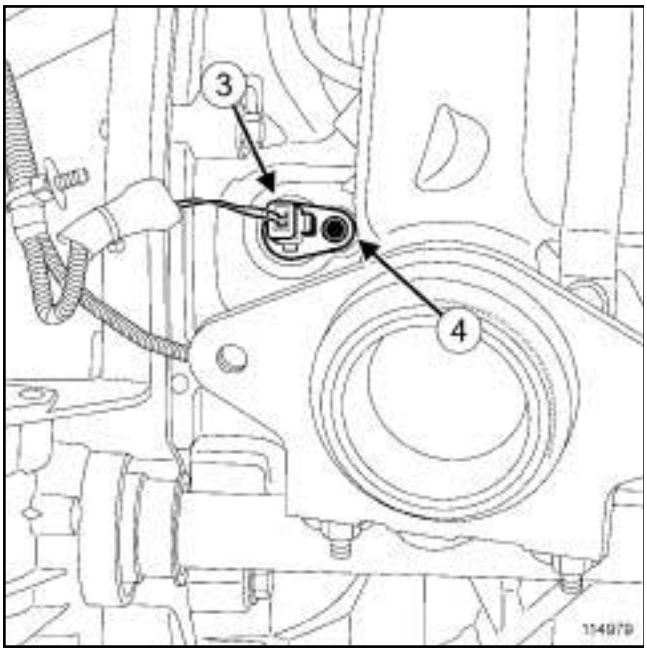

114979

- ❑ Move the crankshaft position sensor heat insulation to one side.
- ❑ Disconnect the crankshaft position sensor connector (**3**) .
- ❑ Remove:
  - the crankshaft position sensor bolt (**4**) ,
  - the crankshaft position sensor.

REFITTING

I - REFITTING PREPARATIONS OPERATION

- ❑ Always replace the O-ring if the crankshaft position sensor is being reused.
- ❑ Lubricate the crankshaft position sensor seal with engine oil.

II - REFITTING OPERATION FOR PART CONCERNED

- ❑ Refit:
  - the crankshaft position sensor,
  - the crankshaft position sensor bolt.
- ❑ Torque tighten the **crankshaft position sensor bolt (10 N.m)**.
- ❑ Fit the crankshaft position sensor heat insulation
- ❑ Connect the crankshaft position sensor connector.

III - FINAL OPERATION.

M9R, and 722 or 724

- ❑ Fit the electric coolant pump onto its mounting.
- ❑ Connect the electric coolant pump connector.

M9R, and 724

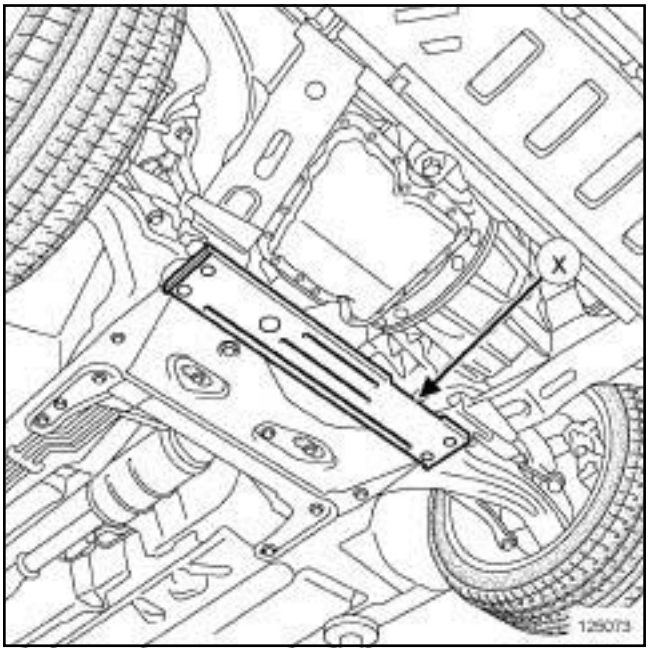

125073

- ❑

> Note:
>
> Position the indent (**x**) of the reinforcement lower cross member on the gearbox side.

- ❑ Refit:
  - the reinforcement lower cross member,
  - the reinforcement lower cross member nuts.
- ❑ Torque tighten the **reinforcement lower cross member nuts (62 N.m)**.
- ❑ Refit:
  - the engine undertray,
  - the engine undertray bolts.
- ❑ Connect the battery (see **Battery: Removal - Refitting**) (MR 364, 80A, Battery).

F9Q

REMOVAL

I - REMOVAL PREPARATION OPERATION

❑ Disconnect the battery (see **Battery: Removal - Refitting**) (MR 364, 80A, Battery).

❑ Position the vehicle on a two-post lift (see **Vehicle: Towing and lifting**) (MR 364, 02A, Lifting equipment).

❑ Remove:

- the engine undertray bolts,
- the engine undertray.

II - REMOVAL OF PART CONCERNED

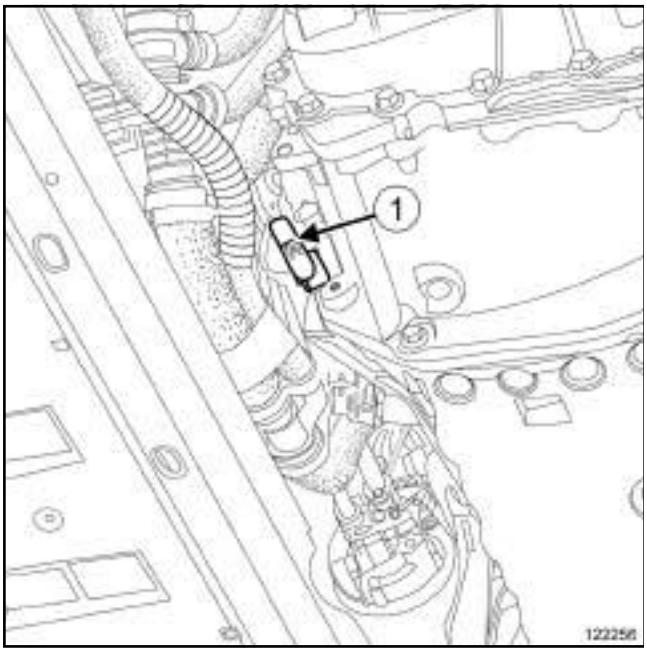

122256

❑ Disconnect the crankshaft position sensor connector (**1**) .

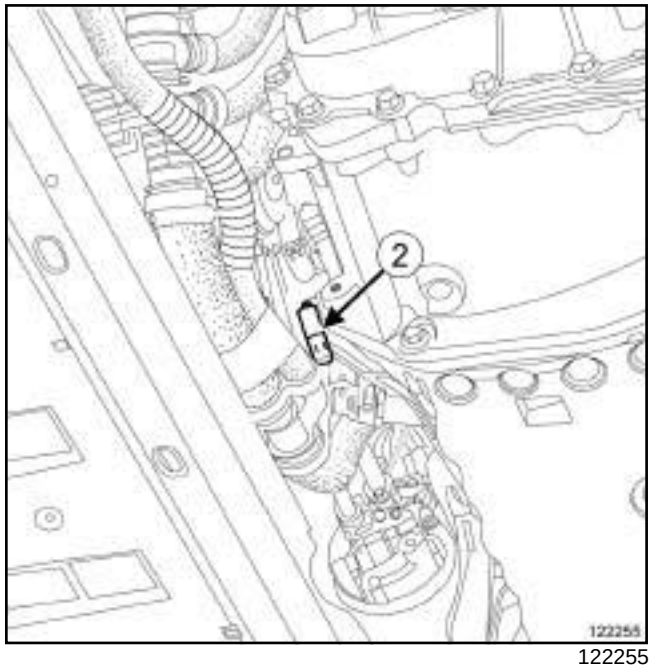

122255

❑ Remove:

- the crankshaft position sensor bolt (**2**) ,
- the crankshaft position sensor.

REFITTING

I - REFITTING OPERATION FOR PART CONCERNED

❑ Refit:

- the crankshaft position sensor,
- the crankshaft position sensor bolt.

❑ Connect the crankshaft position sensor connector.

II - FINAL OPERATION.

❑ Refit:

- the engine undertray,
- the engine undertray bolts.

❑ Connect the battery (see **Battery : Removal - Refitting**) (MR 364, 80A, Battery).

K9K, and 734

IMPORTANT
Wear heat protective gloves during the operation.

IMPORTANT
Wear latex gloves during the operation.

IMPORTANT
Wear protective gloves during the operation.

REMOVAL

OPERATION FOR REMOVAL OF PART CONCERNED

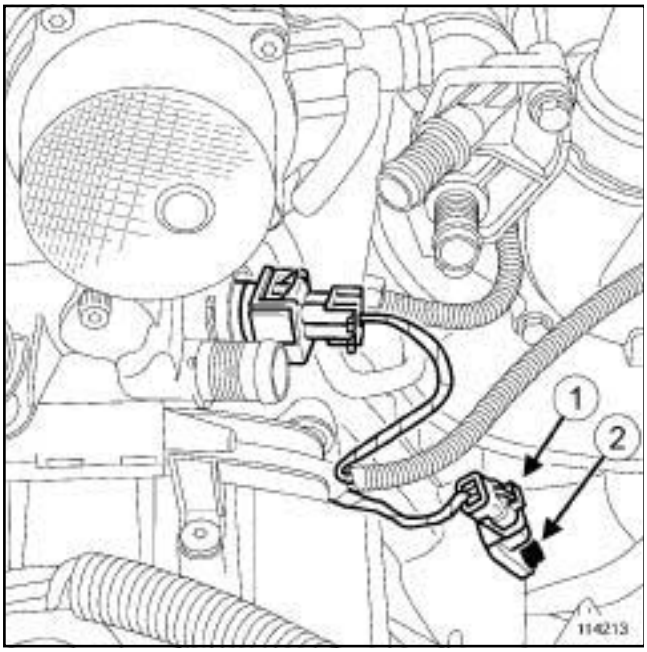

114213

❑ Disconnect the crankshaft position sensor connector (**1**) .

❑ Remove:

- the crankshaft position sensor bolt (**2**) ,
- the crankshaft position sensor.

REFITTING

REFITTING OPERATION FOR PART CONCERNED

❑ Refit:

- the crankshaft position sensor,
- the crankshaft position sensor bolt.

❑ Connect the crankshaft position sensor connector.

K9K, and 724 or 728 or 729 or 732 or 734

REMOVAL

I - REMOVAL PREPARATION OPERATION

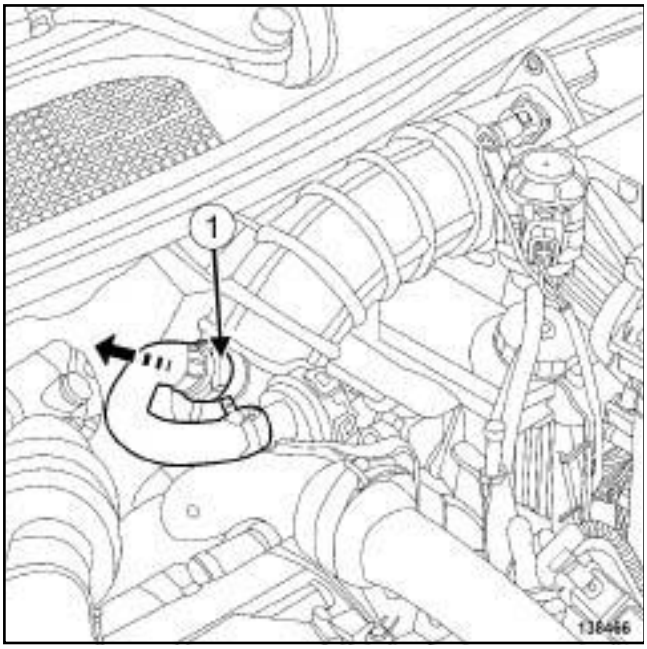

138466

❑ Disconnect the oil vapour rebreathing pipe (**1**) .

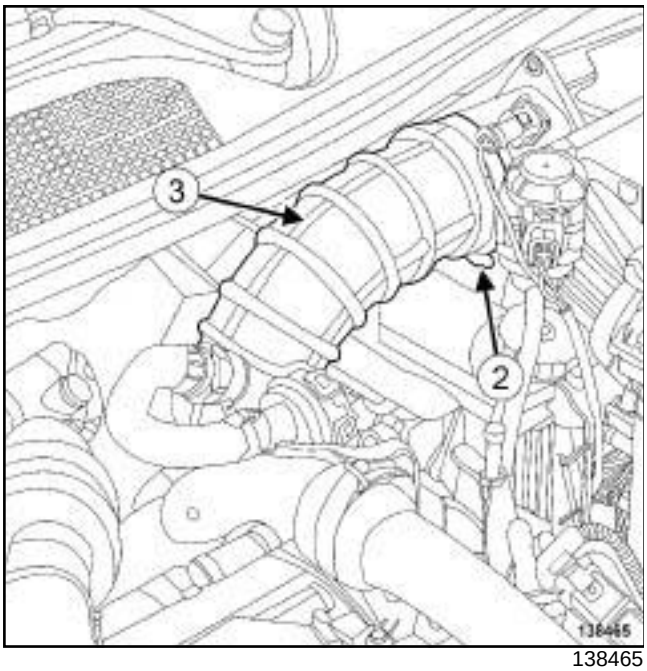

138465

❑ Undo:

- the clip (**2**) of the air filter unit air outlet pipe at the air filter end,
- the clip of the air filter unit air outlet pipe at the turbocharger end.

❑ Remove the air outlet pipe from the air filter box (**3**) .

II - OPERATION FOR REMOVAL OF PART CONCERNED

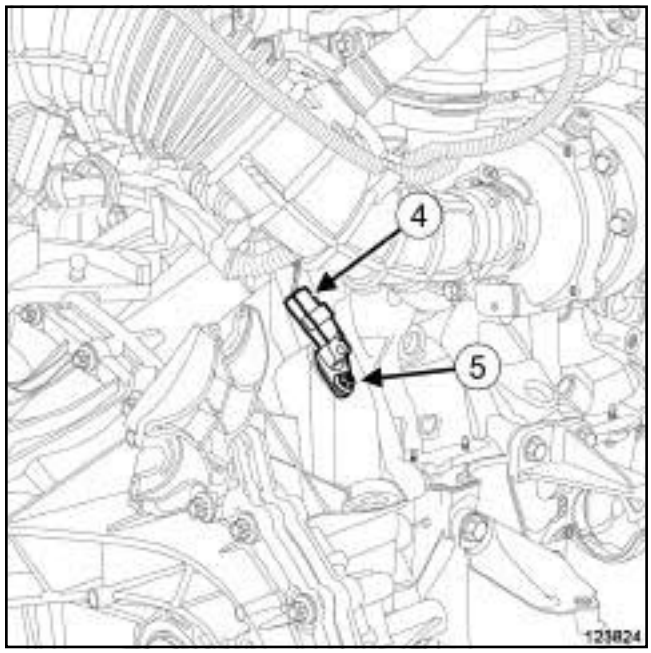

123824

❑ Disconnect the crankshaft position sensor connector (**4**) .

❑ Remove:

- the bolt (**5**) from the crankshaft position sensor.
- the crankshaft position sensor.

REFITTING

I - REFITTING OPERATION FOR PART CONCERNED

❑ Refit:

- the crankshaft position sensor,
- the crankshaft position sensor bolt.

❑ Connect the crankshaft position sensor connector.

II - FINAL OPERATION

❑ Refit the air outlet pipe onto the air filter unit.

❑ Connect the oil vapour rebreathing pipe.

K9K, and 722

REMOVAL

I - REMOVAL PREPARATION OPERATION

❏ Remove the air pipe at the air filter unit inlet.

II - OPERATION FOR REMOVAL OF PART CONCERNED

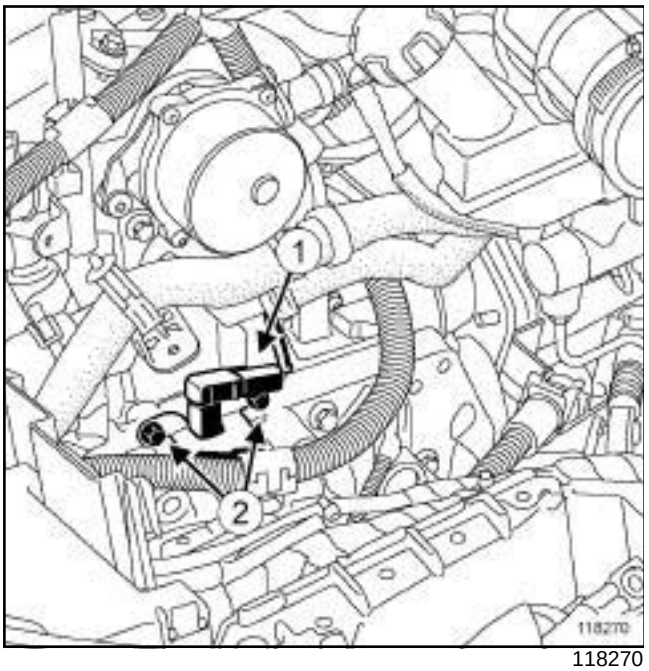

118270

❏ Disconnect the crankshaft position sensor connector (**1**) .

❏ Remove:

- the crankshaft position sensor bolts (**2**) ,
- the crankshaft position sensor.

REFITTING

I - REFITTING OPERATION FOR PART CONCERNED

❏ Refit:

- the crankshaft position sensor,
- the crankshaft position sensor bolts.

❏ Connect the crankshaft position sensor connector.

II - FINAL OPERATION

❏ Refit the air filter unit air inlet pipe.

Leak flow from high-pressure pump: Check

K9K, and 732 or 734

Essential special tooling	
Mot. 1771	Kit for measuring SIEMENS injector leak rate.

Essential equipment
graduated measuring cylinder

IMPORTANT

Consult the safety and cleanliness advice and operation recommendations before carrying out any repair (see **13B**, **Diesel injection**, **Diesel injection: Precautions for repair**, page **13B-12**) .

- ❑ Remove the front engine cover.
- ❑ Disconnect the battery (see **Battery: Removal - Refitting**) (MR 364, 80A, Battery).

122140

- ❑ Disconnect the diesel temperature sensor connector (**1**) .
- ❑ Disconnect the fuel return rail from the diesel injectors on the high pressure pump.
- ❑ Place a blanking plug over the opening on the high pressure pump diesel injector fuel return rail.
- ❑ Connect the offset union with a diameter of **8 mm** fitted with its hose and contained in the **(Mot. 1771)** to the high pressure pump diesel injector fuel return union.
- ❑ Insert this hose into the **graduated measuring cylinder**.
- ❑ Connect the battery (see **Battery : Removal - Refitting**) (MR 364, 80A, Battery).
- ❑ Follow the procedure described in the Fault finding MR (see **Fault finding - Tests**) (MR 366, 13B, Diesel injection).
- ❑ Disconnect the battery (see **Battery: Removal - Refitting**) (MR 364, 80A, Battery).
- ❑ Disconnect the offset union with a diameter of **8 mm** fitted with its hose and contained in the **(Mot. 1771)** from the high pressure pump diesel injector fuel return union.
- ❑ Remove the blanking plugs from the high pressure pump diesel injector fuel return rail.
- ❑ Connect:
  - the diesel temperature sensor connector,
  - the diesel injector fuel return pipe to the high pressure pump.
- ❑ Connect the battery (see **Battery : Removal - Refitting**) (MR 364, 80A, Battery).
- ❑ Reprime the fuel circuit with the manual priming pump.
- ❑ Refit the engine cover.

B84 or C84 or G84 or S84, and K9K, and 722 or 724 or 728 or 729

Essential special tooling	
Mot. 1367-02	Engine stand.
Mot. 1367	Engine support tool for replacing cylinder head
Mot. 1430	Set of 5 crankshaft and camshaft pulley timing pins.
Mot. 1606	High pressure pump-pulley retaining tool.
Mot. 1525	Extractor for timing gear with tapered hub.
Mot. 1525-02	Adapter sockets for Mot.1525.

Essential equipment
diagnostic tool

Tightening torques ▽	
high pressure pump bolts on the cylinder head	**23 N.m**
high pressure pump pulley nut	**55 N.m**

IMPORTANT
To avoid all risk of damage to the systems, apply the safety and cleanliness instructions and operation recommendations before carrying out any repair (see **13B**, **Diesel injection**, **Diesel injection: Precautions for repair**, page **13B-12**) .

IMPORTANT

Use the diagnostic tool before any operation is carried out on the injection circuit to check:

- that the rail is not under pressure,

- that the fuel temperature is not too high.

Working on the circuit with the engine running is strictly forbidden.

WARNING
To prevent impurities from entering the circuit, place protective plugs on all fuel circuit components exposed to the open air.

Note:

Never run the engine in the opposite direction to that of normal operation.

REMOVAL

I - REMOVAL PREPARATION OPERATION

1 - Procedure for high-pressure pumps with a pulley bearing number 070 575

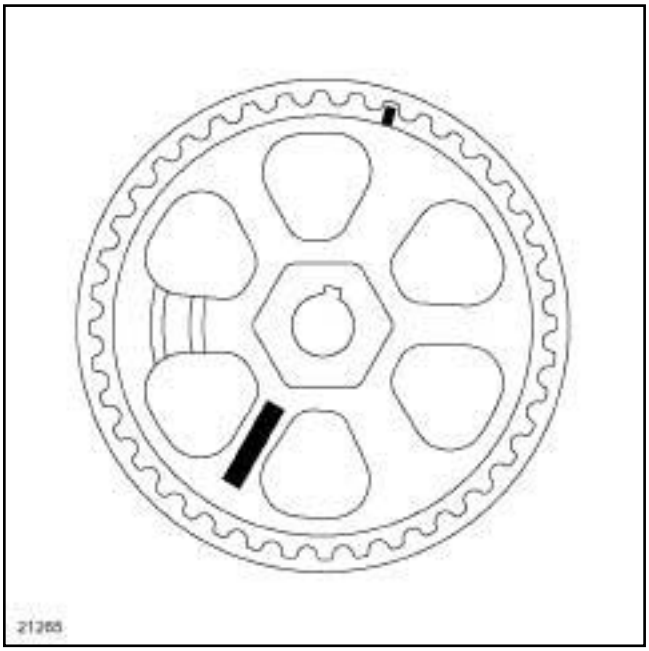

21265

❑

WARNING
Removing any high pressure pump pulley with part no. **070 575** is strictly forbidden.

❑ Replace the « pump - pulley » assembly. To do this, follow the procedure for removing the High Pressure pump not fitted with a pulley **070 575**.

❑ Remove:

- the accessories belt (see **11A**, **Top and front of engine**, **Accessories belt: Removal - Refitting**, page **11A-4**) ,

B84 or C84 or G84 or S84, and K9K, and 722 or 724 or 728 or 729

- the timing belt (see **11A**, **Top and front of engine**, **Timing belt: Removal - Refitting**, page **11A-18**) ,
- the « pump - pulley » assembly.

2 - Procedure for high pressure pumps with a pulley bearing a number other than 070 575

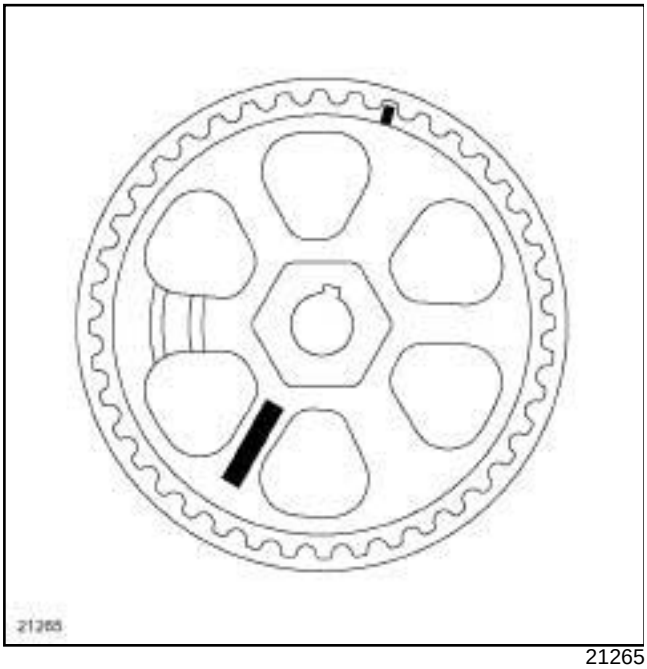

21265

❑ Remove the engine covers.

❑ Disconnect the battery (see **Battery: Removal - Refitting**) (80A, Battery).

K9K, and 722

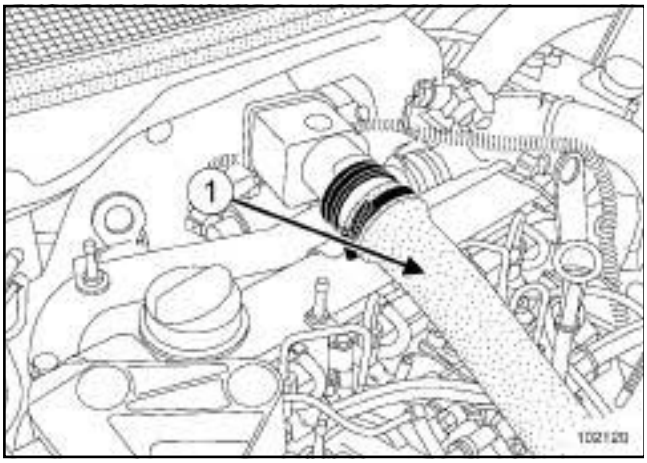

102120

❑ Disconnect the intercooler air inlet pipe (**1**) .

K9K, and 724 or 728 or 729

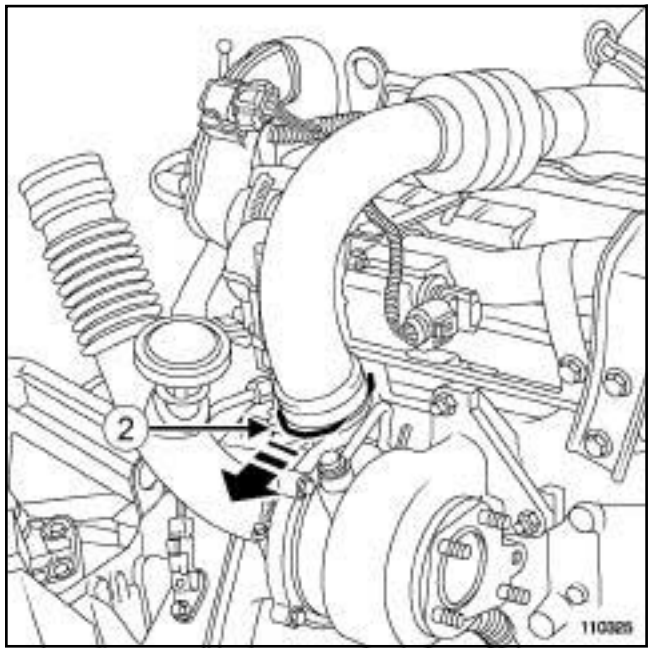

110325

❑ Pull out clip (**2**) .

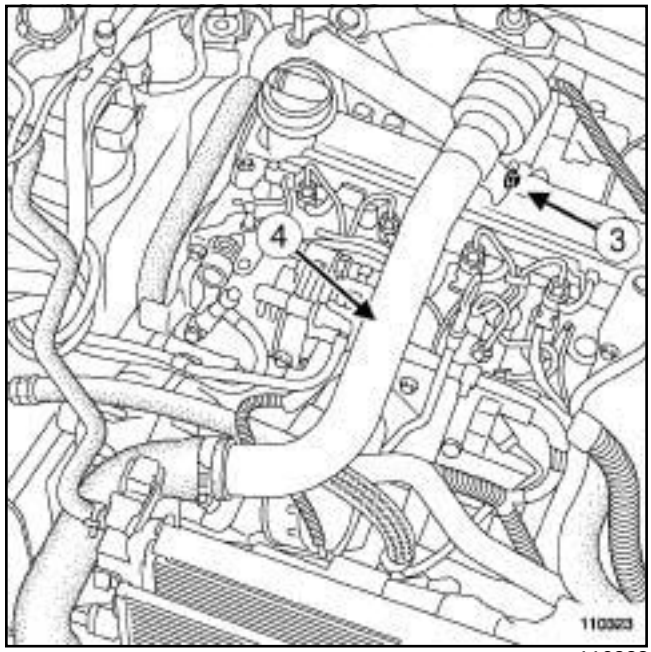

110323

❑ Remove the bolt (**3**) .

❑ Move aside the intercooler air inlet pipe (**4**) .

B84 or C84 or G84 or S84, and K9K, and 722 or 724 or 728 or 729

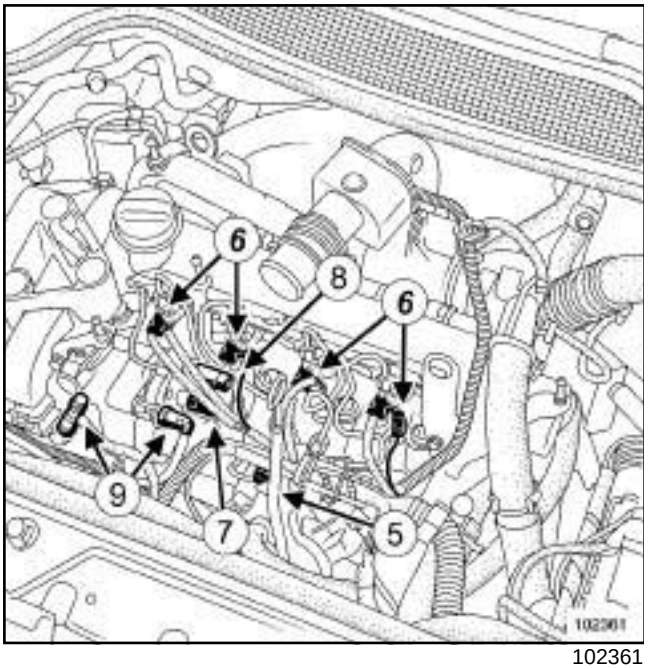

102361

❑ Remove dipstick guide tube (**5**) .

❑ Disconnect:

- the heater plug connectors (**6**) ,
- the injector connectors,
- the flow actuator connectors (**7**) ,
- the diesel temperature sensor connector (**8**) ,
- the fuel supply and return pipes on the high pressure pump (**9**) .

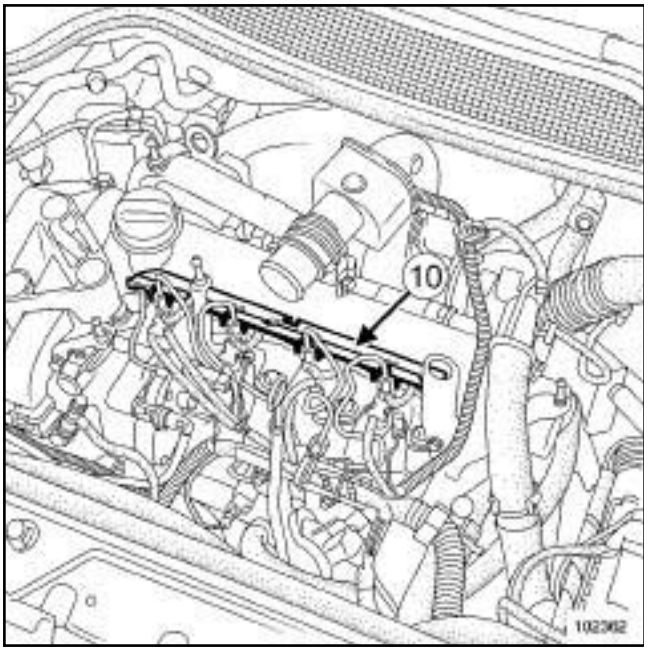

102362

❑ Remove the diesel fuel splash plate (**10**) .

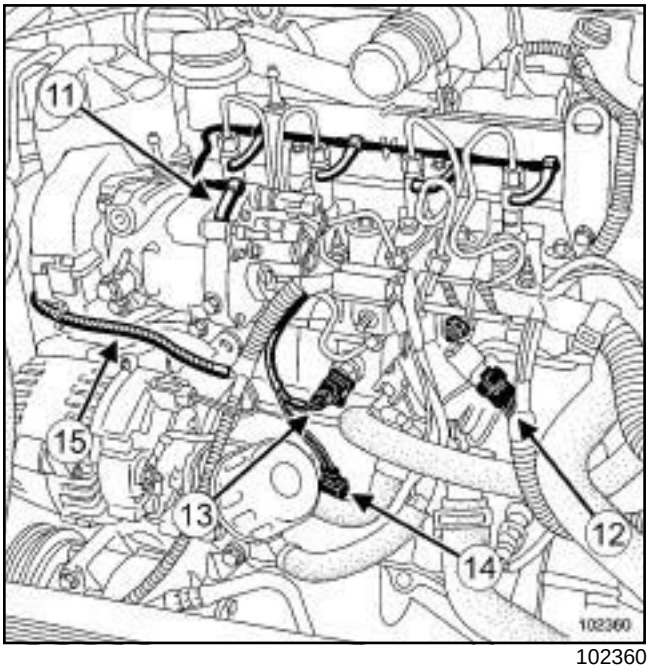

102360

❑ Disconnect:

- the fuel return pipe on the injection pump (**11**) ,
- the injector rail pressure sensor (**12**) ,
- the accelerometer (**13**) ,
- the oil level sensor (**14**) ,
- the camshaft position sensor (**15**) on the timing cover.

❑ Move aside the wiring.

❑ Remove:

- the neck located on the injector rail,
- the high pressure pipe between the pump and the rail (see **13B**, **Diesel injection**, **High-pressure pipe between the pump and rail: Removal - Refitting**, page **13B-160**) .

B84 or C84 or G84 or S84, and K9K, and 722 or 724 or 728 or 729

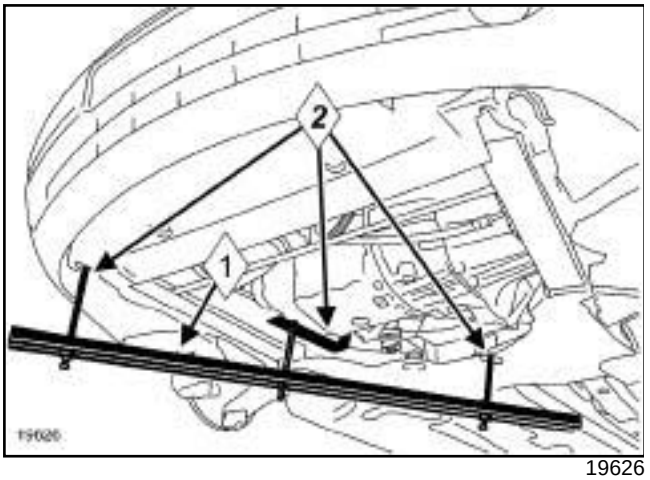

19626

❑ Position the **(Mot. 1367-02)** (**1**) and **(Mot. 1367)** (**2**) .

❑ Remove the right-hand suspended engine mounting (see **19D**, **Engine mounting**, **Right-hand suspended engine mounting: Removal - Refitting**, page **19D-20**) .

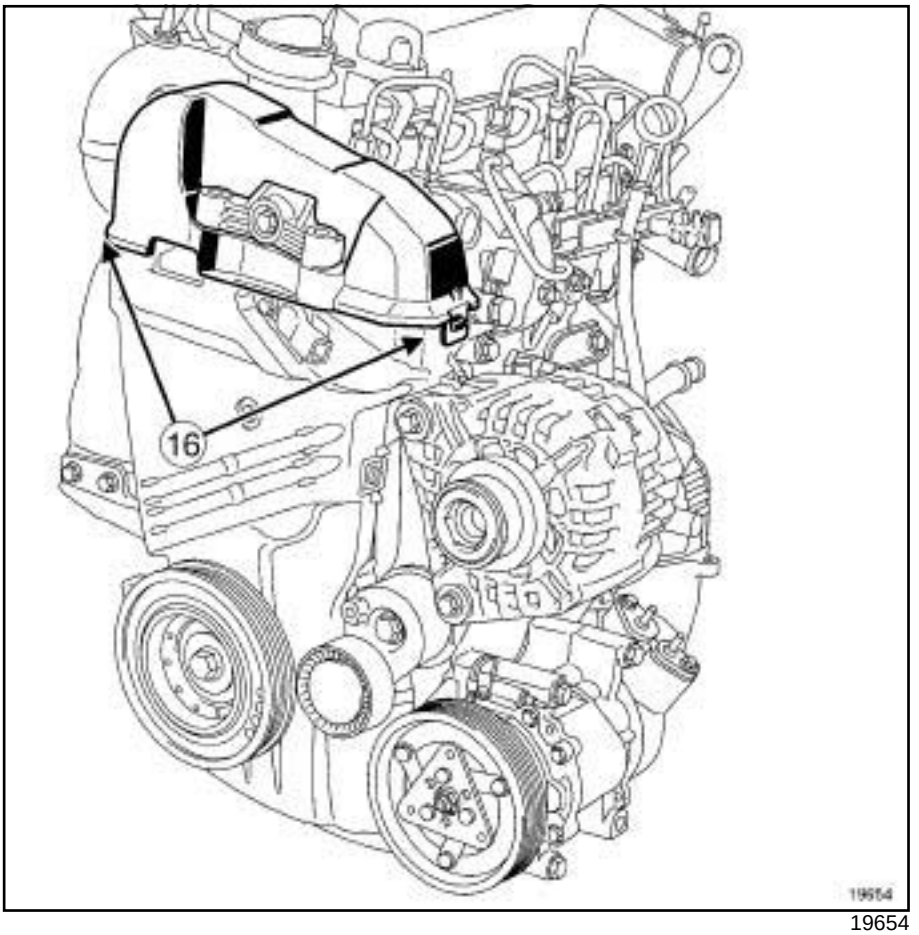

19654

❑ Remove the upper timing cover by unclipping both tabs (**16**) .

B84 or C84 or G84 or S84, and K9K, and 722 or 724 or 728 or 729

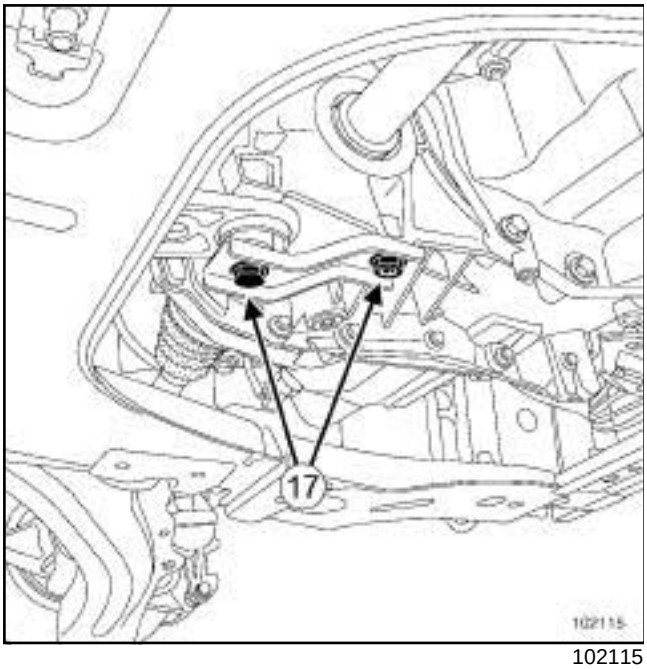

102115

- ❑ Remove the lower engine tie-bar bolts (**17**) .
- ❑ Raise the engine a few centimetres for access to the suspended mounting attachments on the cylinder head and the high pressure pump pulley.

> Note:
>
> Do not disconnect the right-hand driveshaft when lifting the engine.

K9K, and 729, and DP0

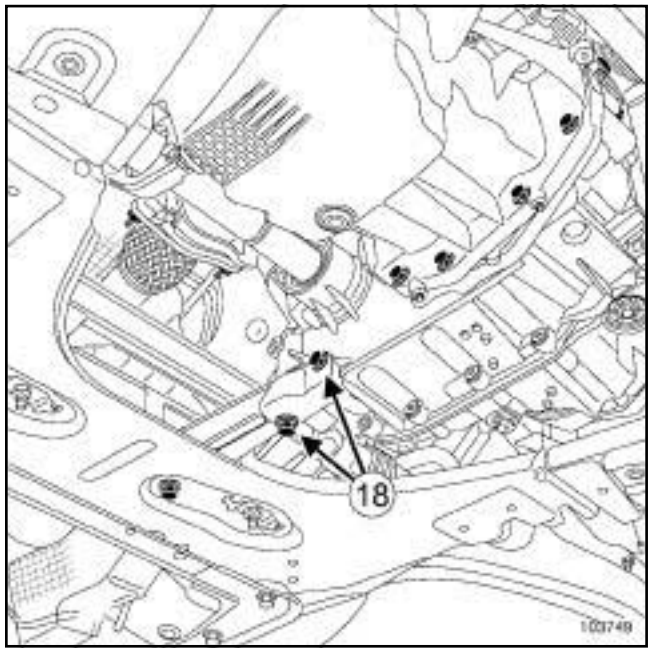

103749

- ❑ Remove the lower engine tie-bar bolts (**18**) .
- ❑ Raise the engine a few centimetres for access to the suspended mounting attachments on the cylinder head and the high pressure pump pulley.

> Note:
>
> Do not disconnect the right-hand driveshaft when lifting the engine.

B84 or C84 or G84 or S84, and K9K, and 722 or 724 or 728 or 729

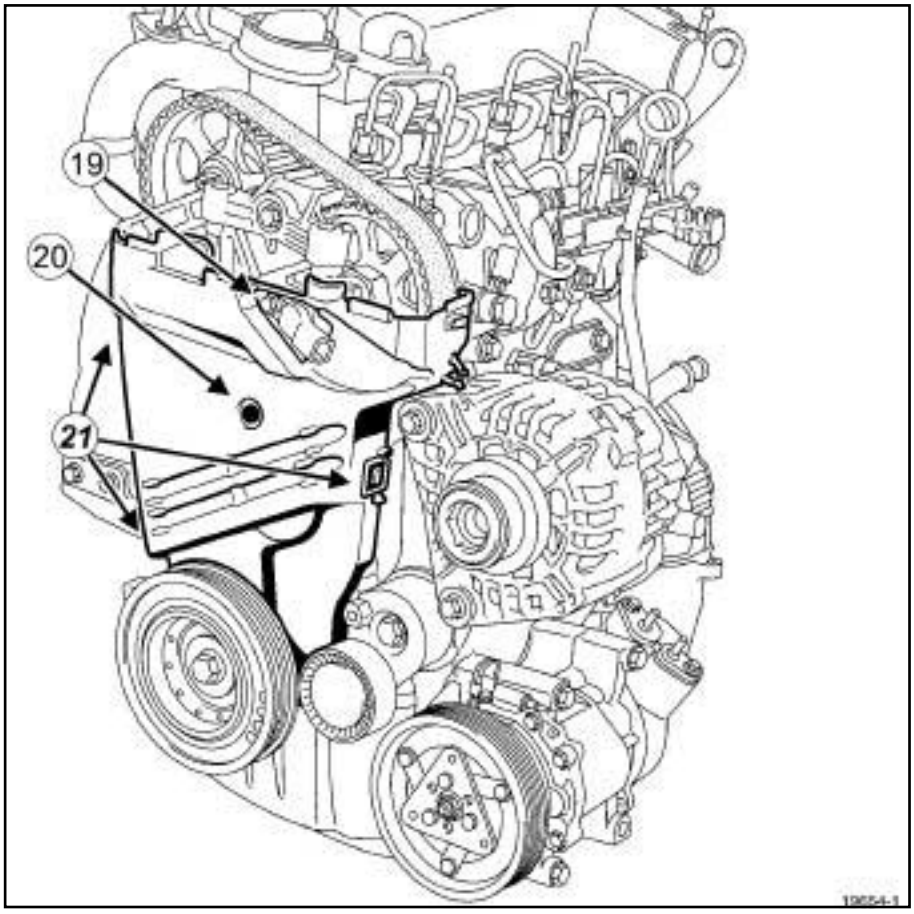

19654-1

- Remove:
  - the camshaft position sensor (**19**) (see **13B**, **Diesel injection**, **Camshaft position sensor: Removal - Refitting**, page **13B-68**) ,
  - the plastic bolt (**20**) .
- Unclip the three tabs (**21**) .
- Remove the lower timing cover.

B84 or C84 or G84 or S84, and K9K, and 722 or 724 or 728 or 729

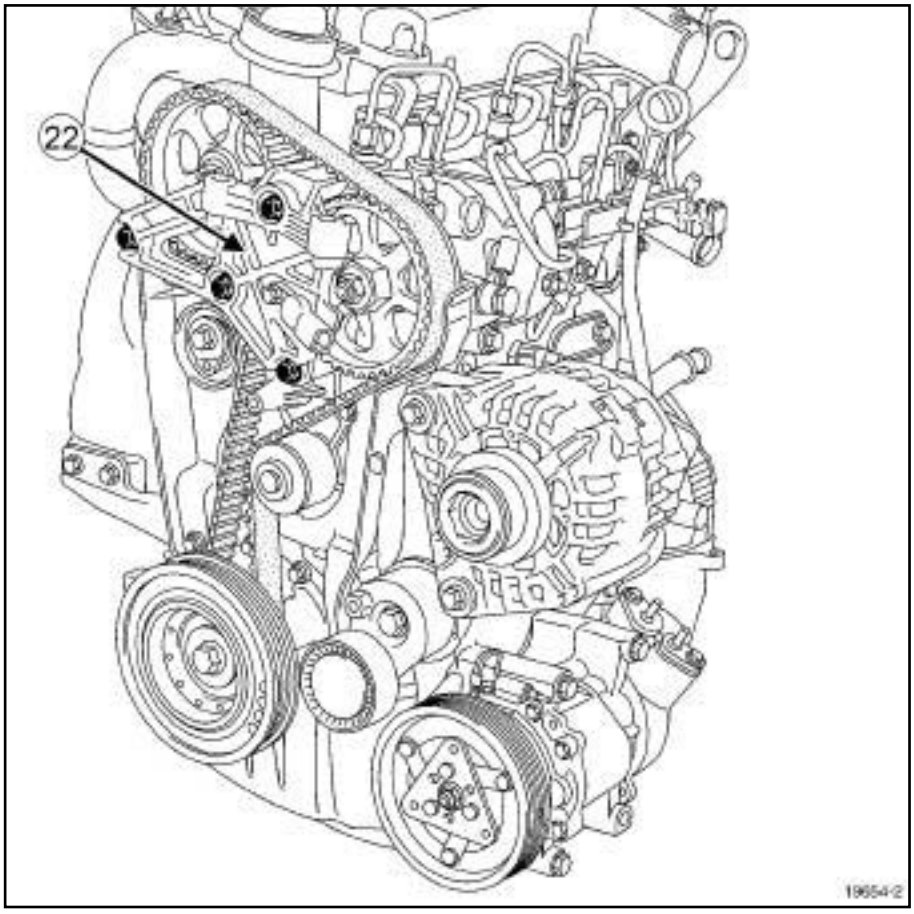

19654-2

❑ Remove the suspended mounting (**22**) from the cylinder head.

B84 or C84 or G84 or S84, and K9K, and 722 or 724 or 728 or 729

II - OPERATION FOR REMOVAL OF PART CONCERNED

First fitting

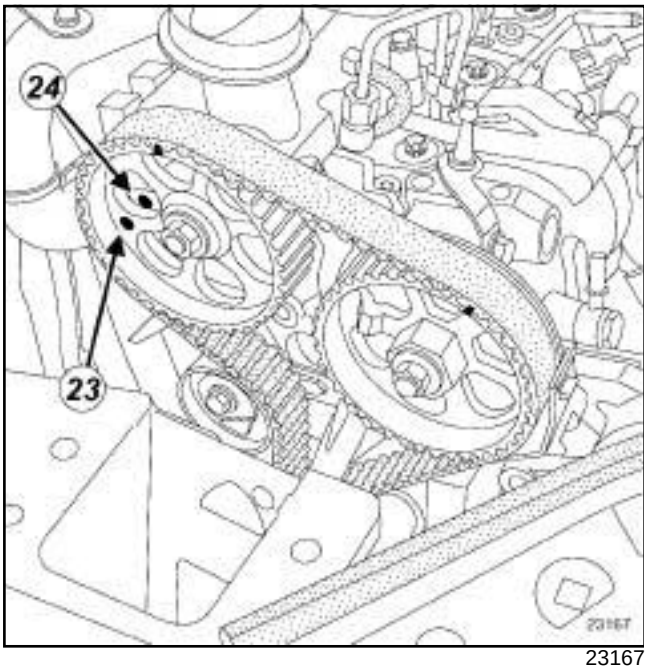

23167

Second fitting

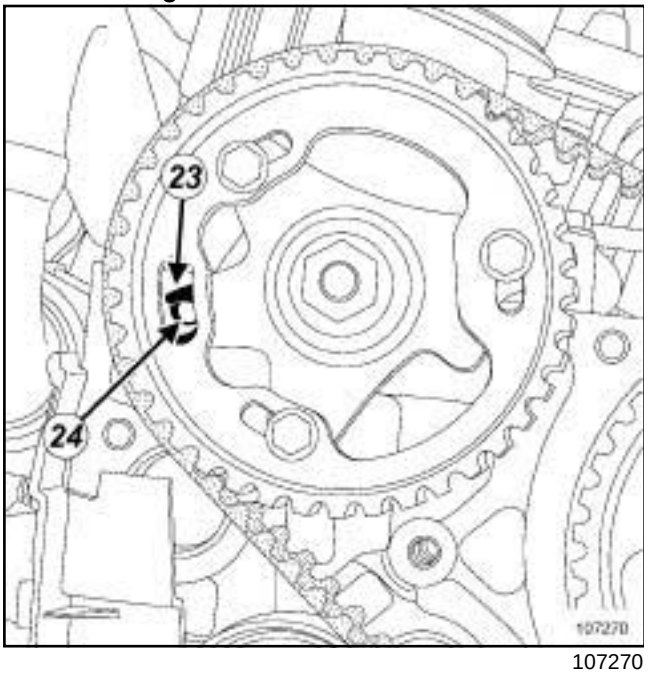

107270

❑ Position the engine at Top Dead Centre. The camshaft pulley hole (**23**) should be opposite the cylinder head hole (**24**) .

> Note:
>
> Never run the engine in the opposite direction to that of normal operation.

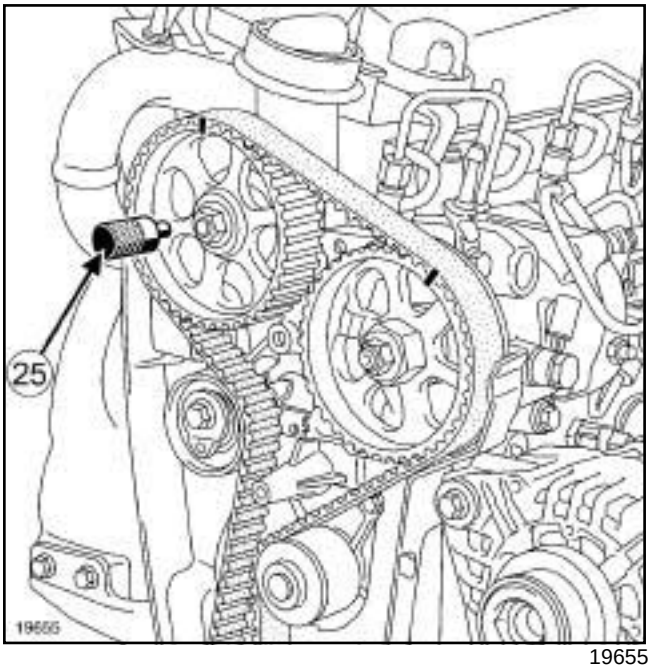

19655

❑ Insert the **(Mot. 1430)** (**25**) in the camshaft pulley hole and in the cylinder head hole to check that the engine is correctly positioned at top dead centre.

❑ Remove the **(Mot. 1430)** once the engine is in position.

B84 or C84 or G84 or S84, and K9K, and 722 or 724 or 728 or 729

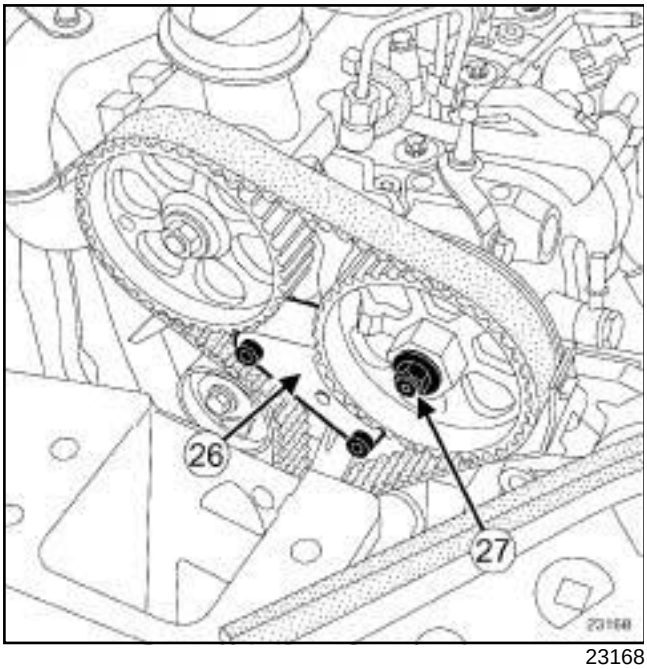

23168

❑ Fit the **(Mot. 1606)** (**26**) on the cylinder head.

> Note:
>
> If necessary, turn the engine slowly to adjust the position of the **(Mot. 1606)** on the high pressure pump pulley teeth.

❑ Immobilise the high pressure pump pulley with a **32 mm** spanner then remove the nut (**27**) from the pulley.

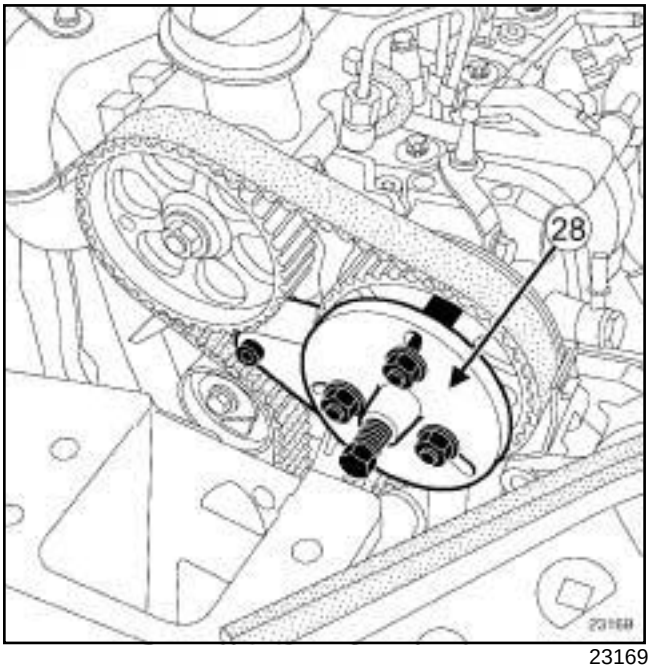

23169

❑ Fit the tool **(Mot. 1525)** (**28**) fitted with the tool **(Mot. 1525-02)** on the high pressure pump pulley.

> Note:
>
> If necessary, remove the spacer at the end of the pushrod from the **(Mot. 1525)** to improve the positioning.

❑ Screw the **(Mot. 1525)** pushrod until it makes contact with the high pressure pump shaft.

> Note:
>
> Check that the pushrod of the tool **(Mot. 1525)** is correctly oriented and is pressing against the high pressure pump shaft. Adjust the tool if necessary.

B84 or C84 or G84 or S84, and K9K, and 722 or 724 or 728 or 729

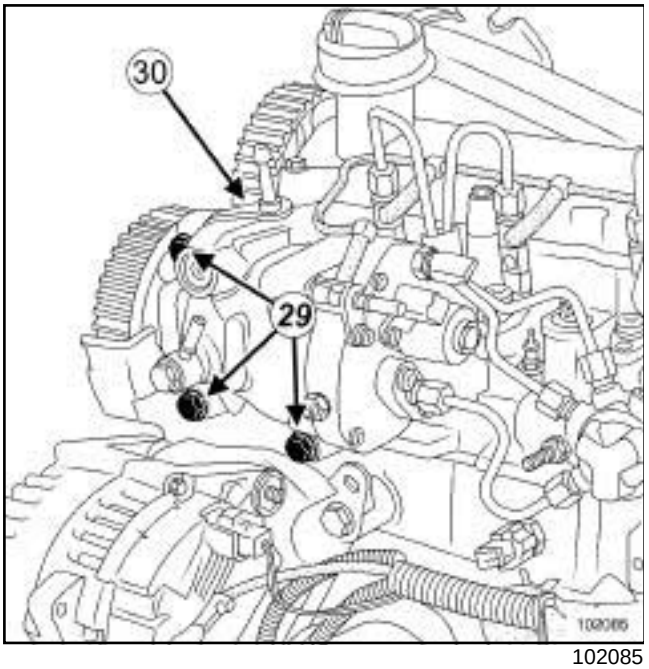

102085

❑ Remove:

- the bolts (**29**) from the high pressure pump on the cylinder head,
- the air filter unit bracket (**30**) .

❑ Gradually screw the pushrod of the **(Mot. 1525)** until the high pressure pump becomes detached.

> Note:
>
> Guide and support the high pressure pump with one hand as it is being removed using the **(Mot. 1525)**.

❑ Remove the high pressure pump from the engine compartment.

> Note:
>
> If the high pressure pump is being reused, keep it in a sealed bag during the removal operation.

❑ Remove the **(Mot. 1525)** and **(Mot. 1525-02)** from the high pressure pump pulley.

REFITTING

I - REFITTING PREPARATION OPERATION

❑

> **WARNING**
>
> Do not remove the blanking plugs from each component until the last moment.
>
> Also, do not remove the components from their packaging until they are to be fitted to the vehicle.

II - REFITTING OPERATION FOR PART CONCERNED

❑ Check for an index pin on the high pressure pump shaft.

❑ Position the high pressure pump on the cylinder head whilst inserting it in its pulley.

> Note:
>
> Check that the high pressure pump shaft is correctly orientated in relation to the pulley.

❑ Fit the air filter unit bracket.

❑ Tighten the high pressure pump bolts until they make contact with the cylinder head.

B84 or C84 or G84 or S84, and K9K, and 722 or 724 or 728 or 729

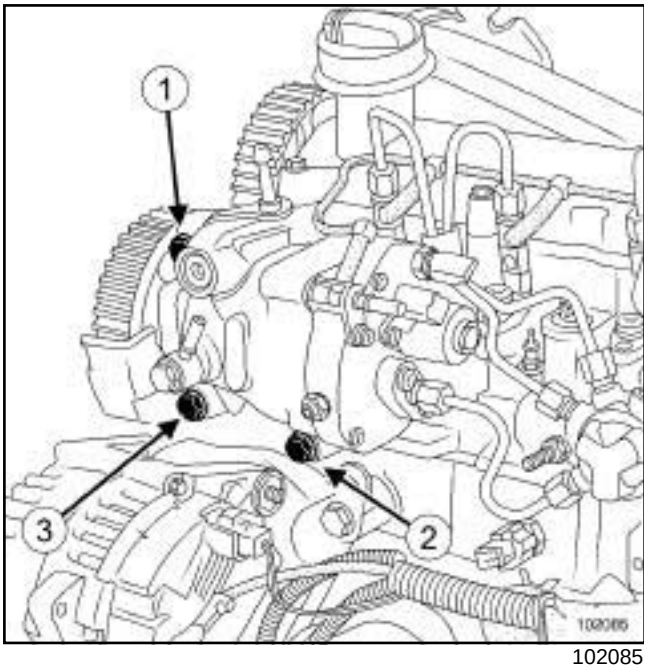

102085

❑ Tighten to torque and in order the **high pressure pump bolts on the cylinder head (23 N.m)**.

❑ Fit the nut on the high pressure pump pulley.

❑ Torque tighten the **high pressure pump pulley nut (55 N.m)** holding the high pressure pump pulley with a **32 mm** spanner.

> Note:
>
> Check that the timing belt is correctly positioned and in good condition.

❑ Remove the **(Mot. 1606)** from the cylinder head.

III - FINAL OPERATION

❑ Refit the new high pressure pipe between the pump and the injector rail (see **13B**, **Diesel injection**, **High-pressure pipe between the pump and rail: Removal - Refitting**, page **13B-160**) .

❑ Refit:

- the suspended mounting on the cylinder head,
- the lower timing cover,
- the camshaft position sensor (see **13B**, **Diesel injection**, **Camshaft position sensor: Removal - Refitting**, page **13B-68**) .

K9K, and 729, and DP0

❑ Refit the lower engine tie-bar bolts.

❑ Refit:

- the lower engine tie-bar,
- the upper timing cover,
- the right-hand suspended engine mounting (see **19D**, **Engine mounting**, **Right-hand suspended engine mounting: Removal - Refitting**, page **19D-20**) .

❑ Remove the **(Mot. 1367-02)** and **(Mot. 1367)**.

❑ Refit the neck on the injector rail.

❑ Fit the injection wiring.

❑ Connect:

- the camshaft position sensor,
- the oil level sensor,
- the accelerometer,
- the injector rail pressure sensor,
- the fuel return pipe connecting the injectors to the pump.

❑ Refit the diesel fuel splash plate.

❑ Connect:

- the fuel supply and return pipes on the high pressure pump,
- the diesel temperature sensor connector ,
- the fuel flow actuator connector,
- the injector connectors,
- the heater plug connectors.

❑ Refit the dipstick guide tube.

K9K, and 728 or 729

❑ Refit:

- the intercooler air inlet pipe,
- the bolt on the intercooler inlet air pipe.

B84 or C84 or G84 or S84, and K9K, and 722 or 724 or 728 or 729

K9K, and 722

❑ Refit the intercooler air inlet pipe.

❑ Prime the diesel fuel supply circuit with the priming pump (automatic degassing).

❑ Connect the battery (see **Battery : Removal - Refitting**) (80A, Battery).

❑ If replacing the high pressure pump, reprime the diesel circuit using the **diagnostic tool**.

Note:

For VDiag numbers before **VDiag 48**, it is essential to reprogram the injection computer.

If reprogramming is not carried out, do not apply the procedure detailed below but prime the fuel circuit using the manual priming pump.

WARNING

Never start the engine until the pump has been reprimed.

Also comply with the operation instructions provided to prevent the high pressure pump from being damaged internally, due to running with no load and no diesel lubrication.

❑ Connect the **diagnostic tool** to the vehicle.

❑ Connect to the diesel injection computer.

❑ Run command **AC212 «FILLING NEW PUMP HOUSING »** .

❑ Follow the instructions on the **diagnostic tool** until the command is completed.

❑ Start the engine.

Note:

The starting phase may last up to **20 seconds**.

❑ If the engine does not start or if the startup sequence is interrupted:

- switch off the ignition,
- wait **30 seconds**,
- restart the engine.

❑ Using the **diagnostic tool**, clear any faults stored by the injection computer.

❑ Check the high pressure circuit sealing after repair (see **13B**, **Diesel injection**, **High pressure pipe: Checking**, page **13B-157**) .

WARNING

Check that there are no diesel leaks:

- let the engine run at idle speed until the engine cooling fan starts to operate,
- accelerate several times at no load,
- switch off the ignition,
- check that there is no diesel fuel escaping.

B84 or C84 or G84 or S84, and F9Q, and 800 or 803 or 804 or 808

Essential special tooling	
Mot. 1668	Locking high pressure pump sprocket.
Mot. 1525	Extractor for timing gear with tapered hub.
Mot. 1525-03	Adapter sockets for Mot.1525. (for 33-tooth pulley).

Essential equipment
diagnostic tool

Tightening torques ▽	
high pressure pump mounting bolts on the pump supports	**30 Nm**
high pressure pump pulley nut	**50 Nm**
bolts mounting the high pressure pump support on the cylinder head	**20 Nm + 80°**
high pressure pump rear mounting bolts on the cylinder block	**44 Nm**
bolts mounting the high pressure pump on the pump rear support	**30 Nm**
battery cover mounting bolts	**4 Nm**

IMPORTANT

Before carrying out any work on the injection system, check using the **diagnostic tool** :

- that the injector rail is not under pressure,

- that the fuel temperature is not too high.

Loosening a high pressure pipe union when the engine is running is strictly prohibited.

WARNING

Ensure that any high pressure pipe removed is replaced.

WARNING

Dismantling the interior of the high-pressure pump and the injectors is prohibited.

It is essential to read the repair precautions (see **13B**, **Diesel injection**, **Diesel injection: Precautions for repair**, page **13B-12**) .

REMOVAL

❑ Position the vehicle on a two-post lift (see **Vehicle: Towing and lifting**) (MR 364, 02A, Lifting equipment).

❑ Disconnect the battery (see **Battery: Removal - Refitting**) (MR 364, 80A, Battery).

❑ Remove:

- the accessories belt (see **11A**, **Top and front of engine**, **Accessories belt: Removal - Refitting**, page **11A-4**) ,

- the timing belt (see **11A**, **Top and front of engine**, **Timing belt: Removal - Refitting**, page **11A-18**) .

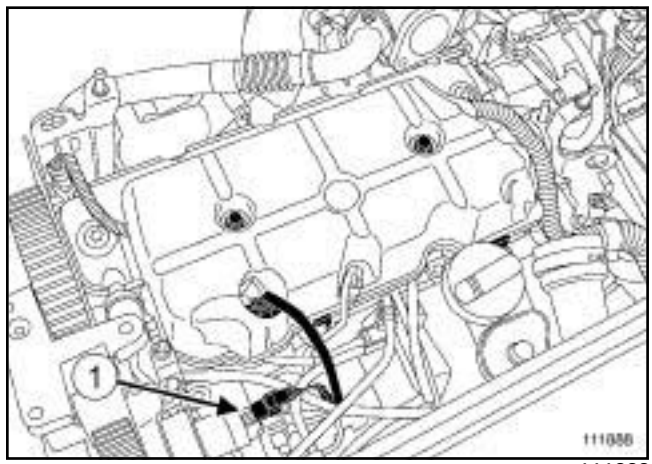

111888

❑ Remove the injector rail protector (see **13B**, **Diesel injection**, **Injector rail protector: Removal - Refitting**, page **13B-154**) .

❑ Disconnect:

- the diesel heater from the diesel filter,

- the heater plugs,

- the pressure regulator (**1**) .

B84 or C84 or G84 or S84, and F9Q, and 800 or 803 or 804 or 808

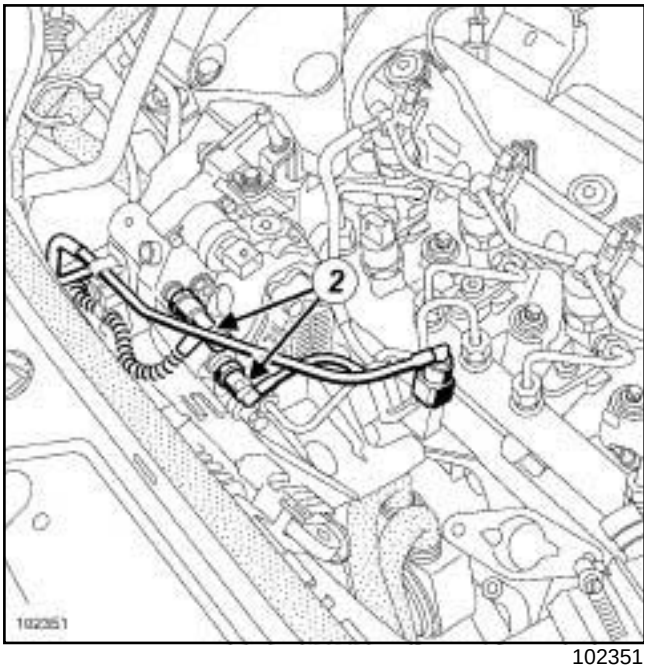

102351

- ❑ Disconnect the diesel supply and return pipes (**2**) .
- ❑ Plug the openings.
- ❑ Remove the retaining clip from the diesel pipes.
- ❑ Remove the pump-rail high pressure pipe (see **13B**, **Diesel injection**, **High-pressure pipe between the pump and rail: Removal - Refitting**, page **13B-160**) .

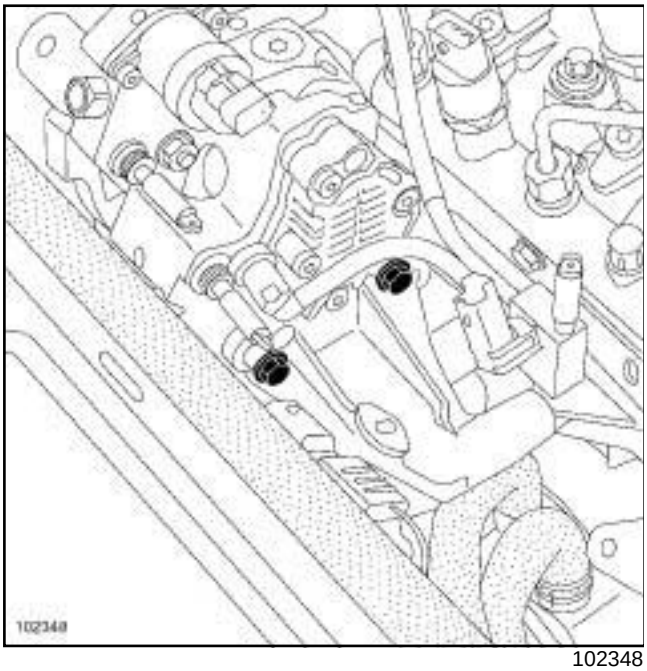

102348

- ❑ Remove the bolts mounting the high-pressure pump to the high-pressure pump rear support.

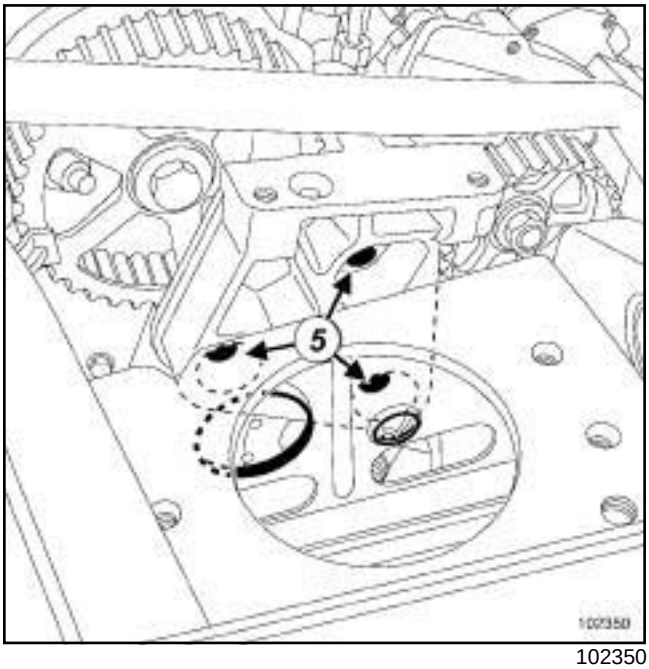

102350

- ❑ Remove:
  - the mounting bolts (**5**) securing the high pressure pump front support,
  - the high pressure pump with the high pressure pump support.

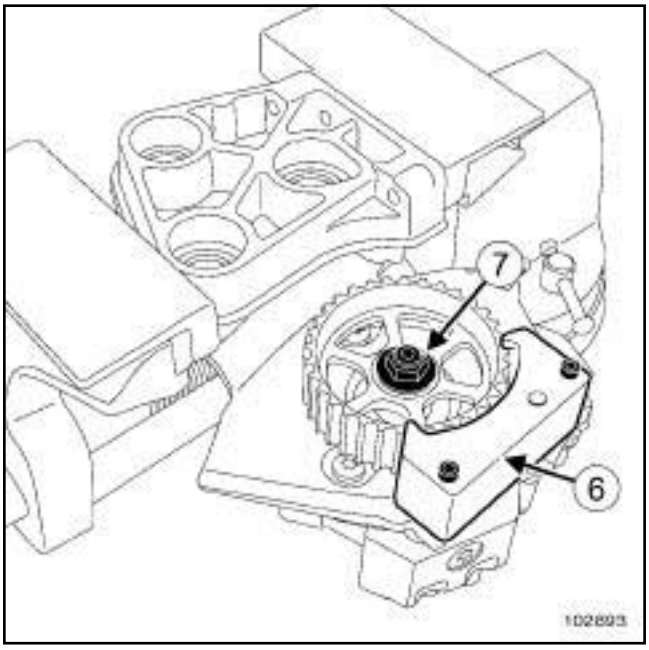

102893

- ❑ Set up the **(Mot. 1668)** (**6**) .
- ❑ Remove the nut (**7**) from the high pressure pump pulley.

B84 or C84 or G84 or S84, and F9Q, and 800 or 803 or 804 or 808

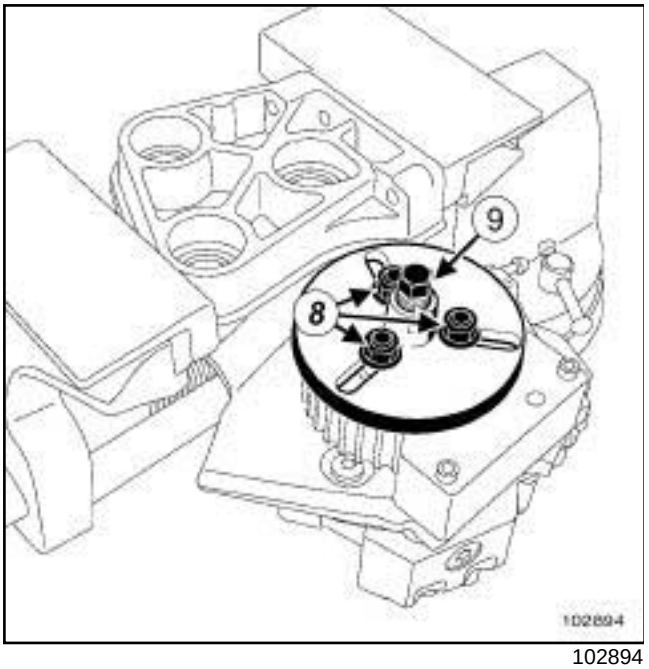

102894

❑ Fit the pulley extractor **(Mot. 1525)** with claws **(Mot. 1525-03)** (**8**) for pulleys with thirty-three teeth.

❑ Extract the pulley by tightening the pulley extractor thrust bolt (**9**) .

❑ Remove the **(Mot. 1525)**, **(Mot. 1525-03)** and the **(Mot. 1668)**.

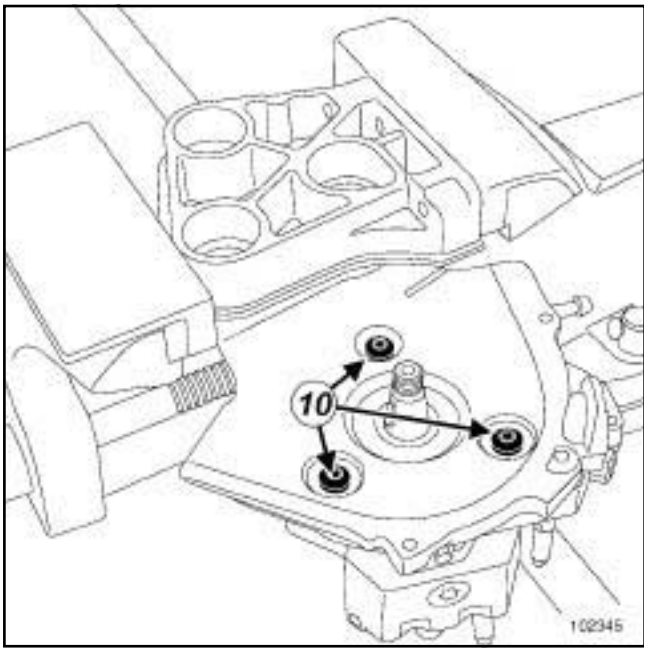

102345

❑ Remove:

- the mounting bolts (**10**) for the high pressure pump,
- the high pressure pump.

REFITTING

❑

> **WARNING**
> Do not remove the blanking plugs from each component until the last moment.

❑ Refit the high pressure pump on the pump support.

❑ Torque tighten:

- the **high pressure pump mounting bolts on the pump supports (30 Nm)**,
- the **high pressure pump pulley nut (50 Nm)** by immobilising the pulley with the **(Mot. 1668)**.

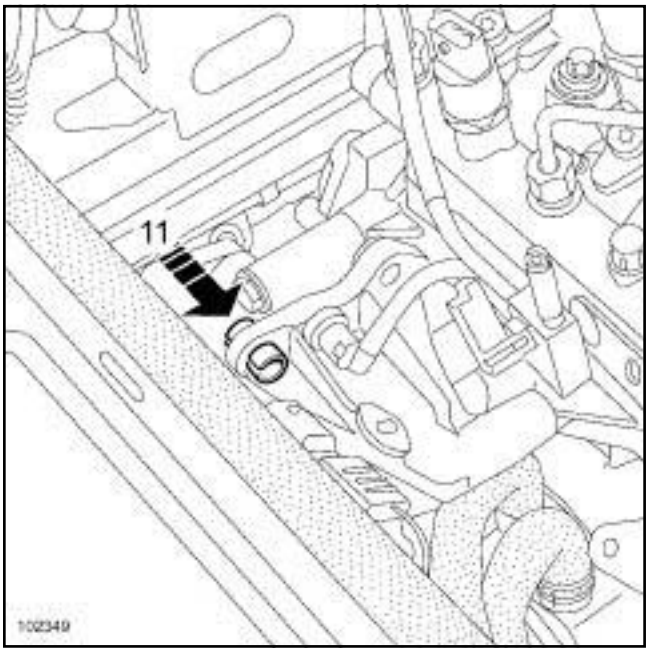

102349

❑ Push the ring (**11**) back as shown in the diagram.

❑ Undo the two mounting bolts on the high pressure pump rear support on the cylinder block.

❑ Refit the « high pressure pump - pump support » assembly.

❑ Torque tighten the **bolts mounting the high pressure pump support on the cylinder head (20 Nm + 80°)**.

I - REFITTING THE HIGH PRESSURE PUMP REAR SUPPORT

❑ Tighten the mounting bolts by hand to press the support against the high pressure pump and the cylinder block.

❑ Torque tighten:

- the **high pressure pump rear mounting bolts on the cylinder block (44 Nm)** (if the bolts are loose),

B84 or C84 or G84 or S84, and F9Q, and 800 or 803 or 804 or 808

- the **bolts mounting the high pressure pump on the pump rear support (30 Nm)**.

II - FINAL OPERATION

❏ Refit a new pump - rail high pressure pipe (see **13B**, **Diesel injection**, **High-pressure pipe between the pump and rail: Removal - Refitting**, page **13B-160**) .

❏ Proceed in the reverse order to removal.

❏ Refit:

- the timing belt (see **11A**, **Top and front of engine**, **Timing belt: Removal - Refitting**, page **11A-18**) ,
- the accessories belt (see **11A**, **Top and front of engine**, **Accessories belt: Removal - Refitting**, page **11A-4**) ,
- the air inlet duct (see **12A**, **Fuel mixture**, **Air inlet duct: Removal - Refitting**, page **12A-46**) .

Note:

Refit the inlet duct without refitting the injector rail protector or replacing the duct seal.

❏ Prime the diesel circuit using the manual priming pump.

❏ Connect the battery (see **Battery : Removal - Refitting**) (MR 364, 80A, Battery).

WARNING

Check that there are no diesel leaks:

- Run the engine at idle speed,
- Accelerate several times under no load,
- Switch off the ignition,
- Check that there is no diesel fuel escaping.

❏ Remove the air inlet duct.

❏ Refit the injector rail protector (see **13B**, **Diesel injection**, **Injector rail protector: Removal - Refitting**, page **13B-154**) .

❏ Refit the air inlet duct (see **12A**, **Fuel mixture**, **Air inlet duct: Removal - Refitting**, page **12A-46**) .

❏ Torque tighten the **battery cover mounting bolts (4 Nm)**.

B84 or C84 or G84 or S84, and K9K, and 732 or 734

Essential special tooling	
Mot. 855	Timing gear locking strap.
Mot. 1768	Injection pump-pulley extractor claws.
Mot. 1746	Offset spanner for tightening high pressure pump pipes.
Mot. 1566	Spanner for removing high pressure pipes.

Essential equipment
diagnostic tool

Tightening torques ▽	
high pressure pump pulley bolts	**55 Nm**
high pressure pump bolts	**21 Nm**
high pressure pipe nuts	**24 Nm**

WARNING

Before starting work on the vehicle, obtain:

- a new plug kit **(Part no. 77 01 476 857)**,
- some cleaning cloths **(part no. 77 11 211 707)**,
- cleaning product **(part no. 77 11 224 188)**.

WARNING

Parts always to be replaced:

- the high pressure pipe between the high pressure pump and the injector rail.

IMPORTANT

Before carrying out any work on the injection system, check using the **diagnostic tool** :

- that the rail is not under pressure,
- that the fuel temperature is not too high.

Working on the circuit with the engine running is strictly forbidden.

IMPORTANT

Consult the safety and cleanliness advice and operation recommendations before carrying out any repair (see **13B**, **Diesel injection**, **Diesel injection: Precautions for repair**, page **13B-12**) .

REMOVAL

I - REMOVAL PREPARATION OPERATION

❑ Position the vehicle on a two-post lift (see **Vehicle: Towing and lifting**) (MR 364, 02A, Lifting equipment).

❑ Switch off the ignition and wait **30 seconds** before starting work on the injection system.

❑ Remove the engine covers.

❑ Disconnect the battery (see **Battery : Removal - Refitting**) (MR 364, 80A, Battery).

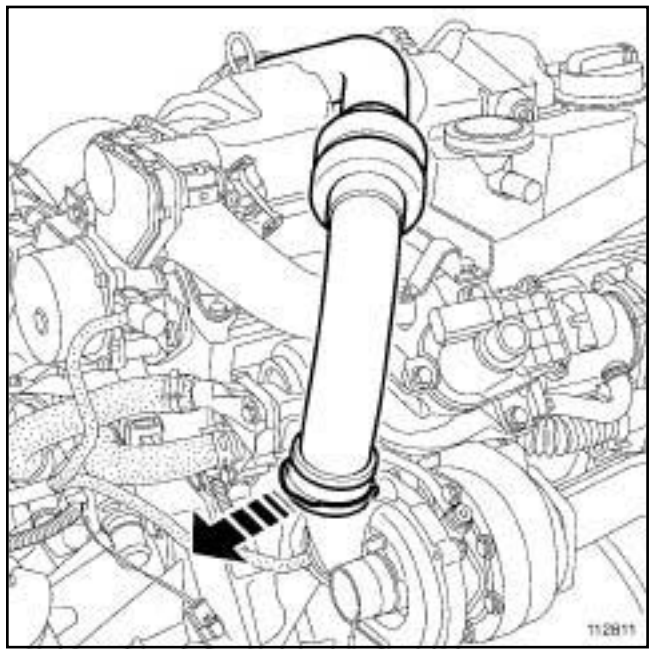

112811

❑ Pull the clip.

❑ Remove the air inlet manifold bolt.

❑ Remove the air inlet duct.

❑ Remove:

- the rigid air duct between the intercooler hose and the turbocharger,
- the injector rail protector cover.

❑ Disconnect:

- the heater plug connectors,

B84 or C84 or G84 or S84, and K9K, and 732 or 734

- the injector connectors,
- the rail pressure sensor connector,
- the fuel flow actuator connector,
- the fuel temperature sensor connector.

❏ Disconnect:

- the fuel return pipe connecting the injectors to the high-pressure pump,
- the fuel inlet pipe.

Note:

Make preparations for the fuel outflow,

Clean with new cloths.

WARNING

- Strictly observe the cleanliness guidelines.
- Beware of diesel fuel splashing when disconnecting the supply unions.

❏ Plug the openings.

❏ Remove:

- the accessories belt (see **11A**, **Top and front of engine**, **Accessories belt: Removal - Refitting**, page **11A-4**) ,
- the timing belt (see **11A**, **Top and front of engine**, **Timing belt: Removal - Refitting**, page **11A-18**) .

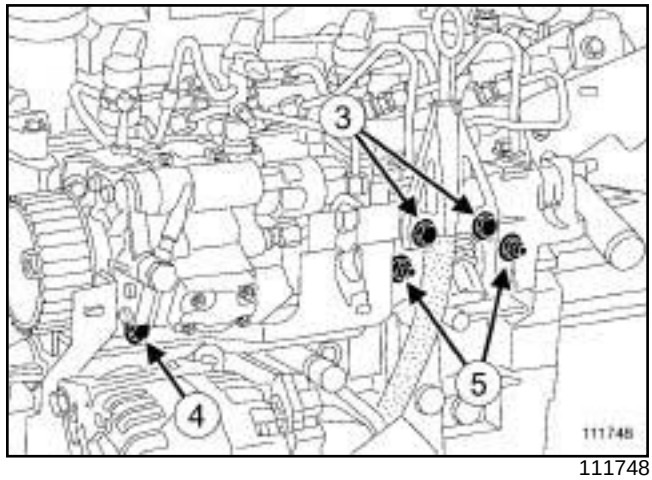

111748

❏ Remove:

- the bolts (**3**) from the dipstick guide on the diesel anti-splash device mounting.
- the bolt (**4**) and nuts (**5**) from the injector rail protector cover mounting.

❏ Move the wiring to one side.

❏ Unpick the drain pipe on the injector rail protector cover support.

❏ Clean the high pressure pipe between the high pressure pump and the injector rail.

❏ Remove:

- the injector rail protector cover support,
- the high-pressure pipe between the high-pressure pump and rail.

Note:

Make preparations for the fuel outflow,

Clean with new cloths.

WARNING

When loosening the union of the high-pressure pipe on the high-pressure pump, the intermediate nut must be secured on the high-pressure pump using a lock wrench.

❏ Fit the correct blanking plugs on:

- the high pressure pump,
- the injector rail.

B84 or C84 or G84 or S84, and K9K, and 732 or 734

II - OPERATION FOR REMOVAL OF PART CONCERNED

REMOVAL OF THE HIGH-PRESSURE PUMP

❑ Remove:

- the high pressure pump bolts,
- the high pressure pump.

> **WARNING**
> If the high pressure pump is to be reused, keep it in a sealed plastic bag all the time it is disconnected.

REMOVAL OF THE HIGH-PRESSURE PUMP PULLEY

❑

> **WARNING**
> When replacing a high-pressure pump, retain the high-pressure pump pulley and refit on the new pump.

❑ Hold the high pressure pump in a vice, using the lower securing point on the pulley side.

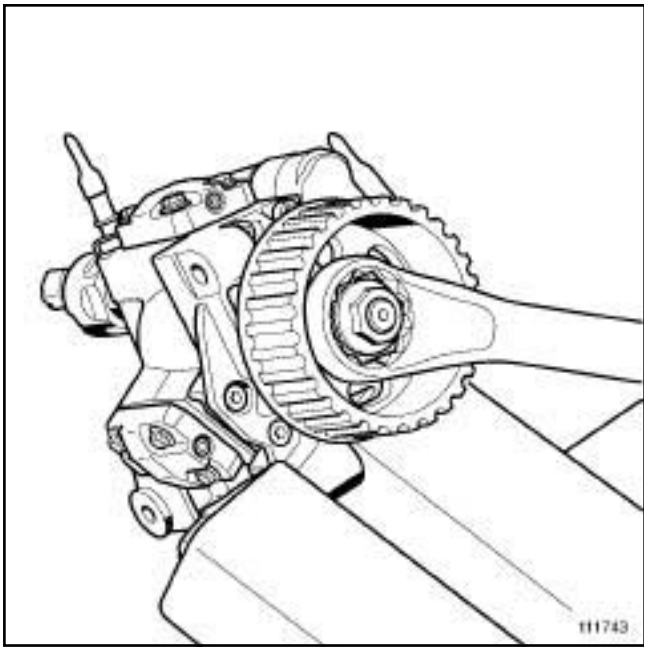

111743

❑ Immobilise the high pressure pump pulley with a **32 mm** offset spanner and remove the pulley nut.

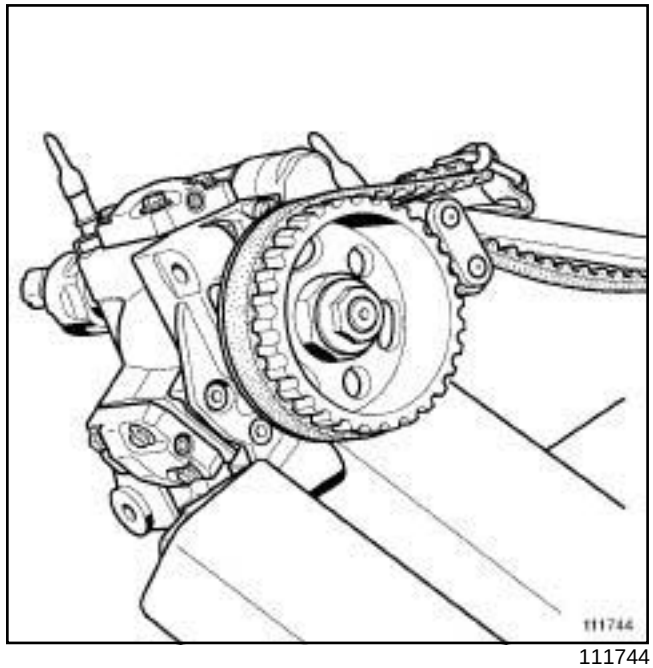

111744

❑

> Note:
> The high-pressure pump pulley can also be immobilised using the **(Mot. 855)**.

❑ Fit the **(Mot. 1768)** on the high pressure pump pulley and remove the pulley.

> **WARNING**
> Ensure that you do not mark the high-pressure pulley when extracting it using the tool.
>
> You must replace any damaged high-pressure pump pulleys.

REFITTING

❑

> **WARNING**
> - Remove the blanking plugs only before reconnecting the fuel circuit pipes
> - The plugs are single-use. Do not reuse them and throw away the complete kit after opening.

B84 or C84 or G84 or S84, and K9K, and 732 or 734

I - REFITTING OPERATION FOR PART CONCERNED

1 - REFITTING THE HIGH-PRESSURE PULLEY

❏ Take the high pressure pump out of its plastic bag.

> **WARNING**
> When replacing an injector rail, only remove it from its packaging just before it is refitted.

❏ Tighten the high pressure pump pulley nut until contact is made.

❏ Lock the high-pressure pump pulley with the tools used previously.

❏ Torque tighten the **high pressure pump pulley bolts (55 Nm)**.

2 - REFITTING THE HIGH-PRESSURE PUMP

❏ Position the high-pressure pump on the cylinder head.

❏ Torque tighten the **high pressure pump bolts (21 Nm)**

❏ Remove: the blanking plugs from the injector rail and high-pressure pump.

❏ Fit a new high pressure pipe between the injector rail and the high pressure pump.

> Note:
> If the new parts kit does not contain an applicator, lubrication of the pipe threads will be unnecessary (as they are self-lubricating pipes).

❏ Hand-tighten the nut on the high-pressure pipe on the pump end, then the one on the rail end.

❏ Torque tighten the **high pressure pipe nuts (24 Nm)** using the **(Mot. 1746)** or **(Mot. 1566)**, starting with the high pressure pump side.

B84 or C84 or G84 or S84, and K9K, and 732 or 734

II - FINAL OPERATION.

❑ Refit:

- the injector rail protector cover support,
- the injector rail protector cover support bolt and nuts,
- the dipstick guide,
- the dipstick guide bolts.

> Note:
>
> Ensure that the injector rail protector support mounting bolt does not fall under the high-pressure pump.

❑ Connect:

- the drain pipe to the injector rail protector cover support
- the heater plug connectors,
- the injector connectors,
- the rail pressure sensor connector,
- the fuel flow actuator connector,
- the fuel return pipe connecting the injectors to the high-pressure pump,
- the fuel supply pipe,
- the fuel temperature sensor connector.

❑ Reposition the wiring harness.

❑ Refit:

- the wiring harness retaining clip nut,
- the timing belt (see **11A**, **Top and front of engine**, **Timing belt: Removal - Refitting**, page **11A-18**) ,
- the accessories belt (see **11A**, **Top and front of engine**, **Accessories belt: Removal - Refitting**, page **11A-4**) ,
- the injector rail protector cover,

❑ Clip the air inlet duct onto the turbocharger.

❑ Refit the inlet manifold bolt.

❑ Connect the battery (see **Battery : Removal - Refitting**) (MR 364, 80A, Battery).

❑ Reprime the fuel circuit using the priming pump.

❑ Using the **diagnostic tool**, clear any faults stored by the injection computer, before restarting the engine.

❑

> **WARNING**
>
> Check that there are no diesel leaks:
>
> - check the sealing after repair (see **13B**, **Diesel injection**, **High pressure pipe: Checking**, page **13B-157**) ,
> - run the engine at idle speed,
> - accelerate several times at no load,
> - check that there are no diesel fuel leaks.

❑ Using the **diagnostic tool**, check that there are no stored faults and clear them if necessary.

B84 or C84 or E84 or K84 or L84, and M9R

Essential special tooling	
Mot. 1390	Support for removing/refitting the engine - gearbox assembly.

Essential equipment
diagnostic tool

Tightening torques ▽	
high pressure pump pinion nut	**90 N.m**
high pressure pump bolts	**25 N.m**
left-hand rubber pad nut on the gearbox mounting	**62 N.m**
reinforcement lower cross member nuts	**62 N.m**
front end panel upper bolts	**21 N.m**
front end panel lower bolts	**44 N.m**

IMPORTANT

Before carrying out any work on the injection system, check using the **diagnostic tool** :

- that the injector rail is not under pressure,

- that the fuel temperature is not too high.

Loosening a high pressure pipe union when the engine is running is strictly prohibited.

IMPORTANT

Consult the safety and cleanliness advice and operation recommendations before carrying out any repair (see **13B**, **Diesel injection**, **Diesel injection: Precautions for repair**, page **13B-12**) .

REMOVAL

I - REMOVAL PREPARATION OPERATION

❑ Position the vehicle on a two-post lift (see **Vehicle: Towing and lifting**) (MR 364, 02A, Lifting equipment).

❑ Remove:

- the engine cover,

- the battery (see **Battery : Removal - Refitting**) (MR 364, 80A, Battery),

- the front bumper (see **Front bumper: Removal - Refitting**) (MR 365, 55A, Exterior protection).

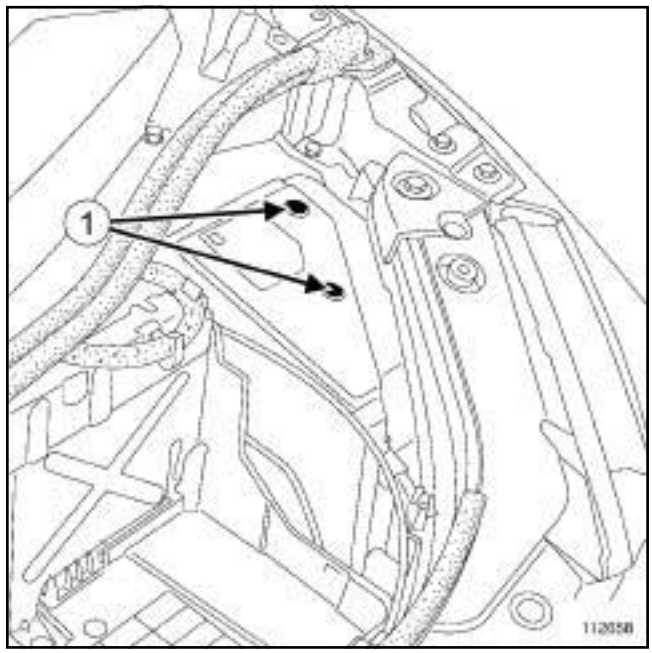

112658

❑ Remove:

- the engine accessories unit cover bolts (**1**) ,

- the engine accessories unit cover.

B84 or C84 or E84 or K84 or L84, and M9R

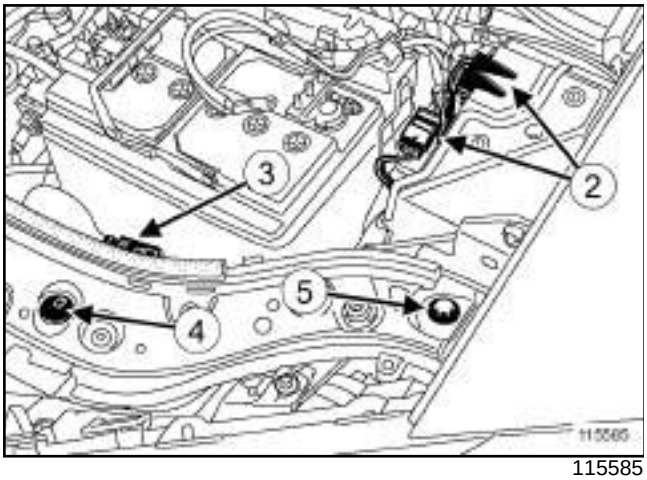

115585

❑ Disconnect the connectors (**2**) from the engine accessories unit.

❑ Unclip the bonnet opening cable (**3**) .

❑ Remove:

- the front end panel clips (**4**) ,
- the front end panel upper bolts (**5**) .

❑ Disconnect the screen washer pipes.

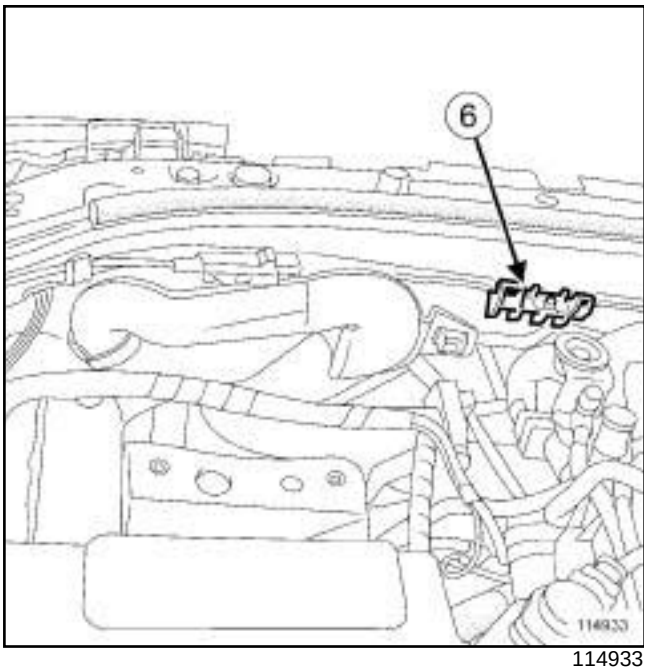

114933

❑ Unclip the air inlet (**6**) .

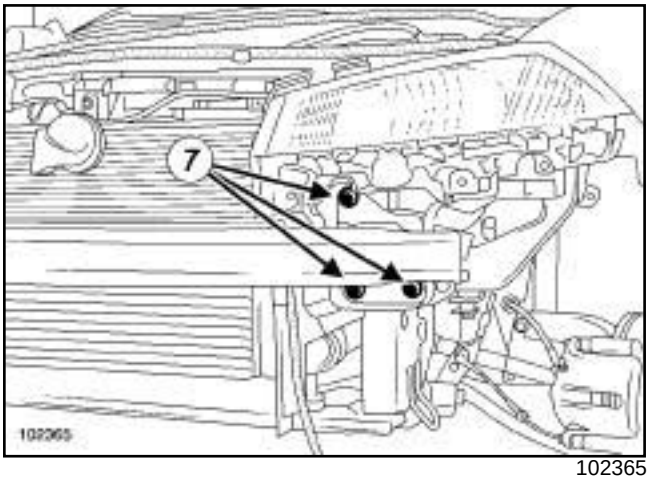

102365

❑ Remove:

- the front end panel lower bolts (**7**) ,
- the front end panel,
- the air filter box (see **12A**, **Fuel mixture**, **Air filter unit: Removal - Refitting**, page **12A-11**) .

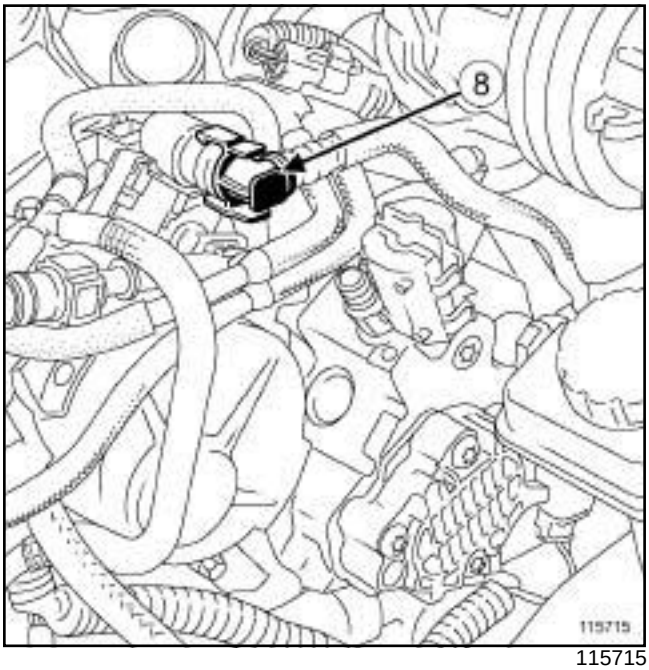

115715

❑ Remove:

- the brake servo pipe (**8**) on the vacuum pump,
- the rail protector (see **13B**, **Diesel injection**, **Injector rail protector: Removal - Refitting**, page **13B-154**) ,
- the oil decanter (see **11A**, **Top and front of engine**, **Oil decanter: Removal - Refitting**, page **11A-301**) ,

B84 or C84 or E84 or K84 or L84, and M9R

- the high pressure pipe between the pump and the rail (see **13B**, **Diesel injection**, **High-pressure pipe between the pump and rail: Removal - Refitting**, page **13B-160**) .

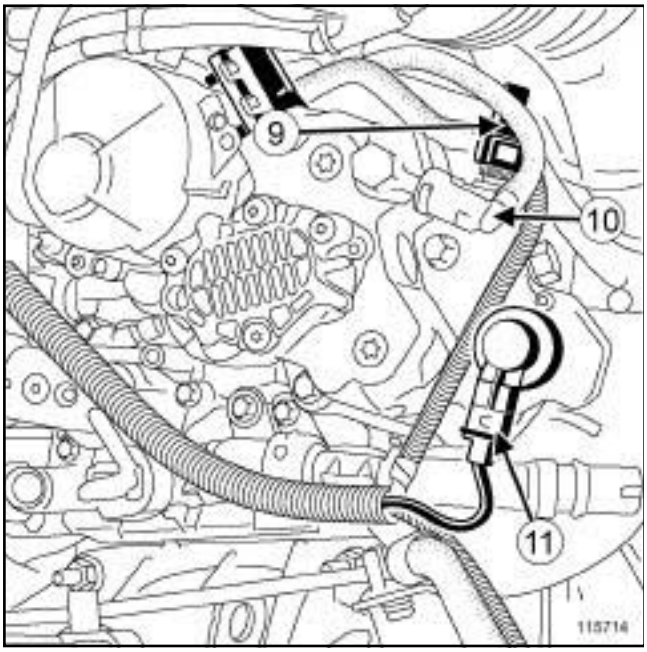

115714

❑ Disconnect the quick-release fuel supply union (**9**) on the high pressure pump.

❑ Disconnect the fuel return union (**10**) .

❑ Plug the openings.

❑ Disconnect the high pressure pump pressure regulator connector (**11**) .

M9R, and 724

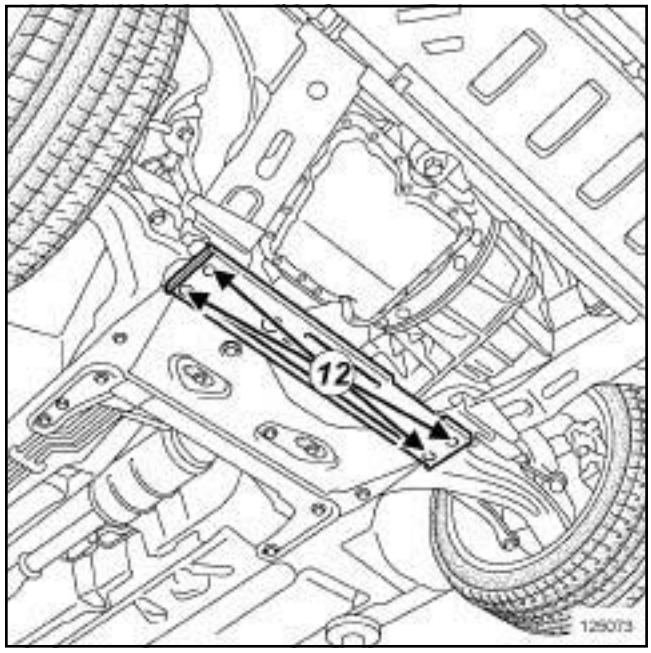

125073

❑ Remove:

- the reinforcement lower cross member nuts (**12**) ,
- the reinforcement lower cross member.

❑ Remove the rear suspended engine mounting (see **19D**, **Engine mounting**, **Lower engine tie-bar: Removal - Refitting**, page **19D-36**) .

B84 or C84 or E84 or K84 or L84, and M9R

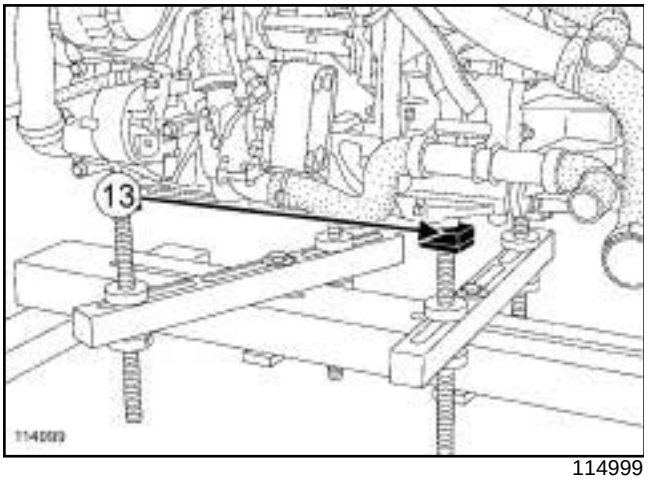

114999

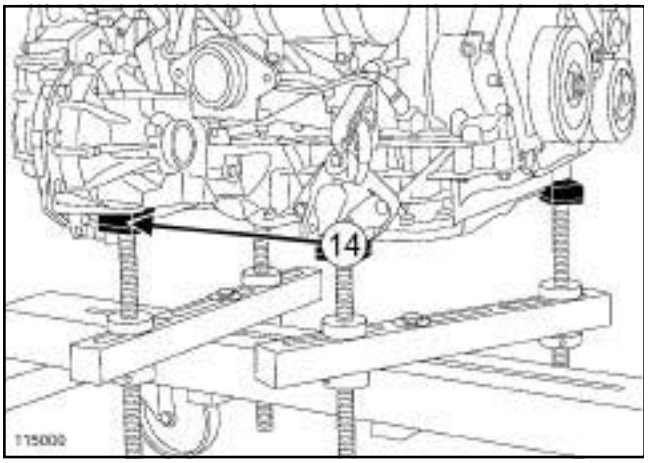

115000

❑ Position the **(Mot. 1390)** on the gearbox on the rubber pads (**13**) and (**14**) .

❑ Position the gearbox against the **(Mot. 1390)**.

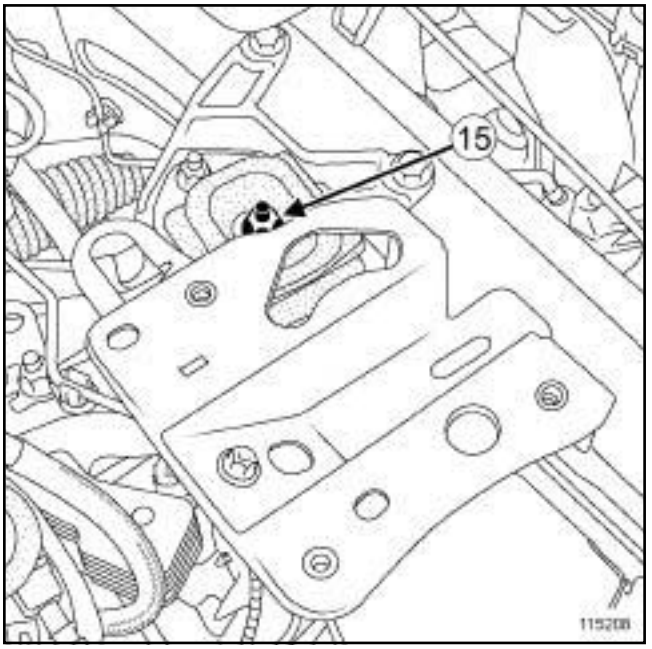

115208

❑ Remove the left-hand rubber pad nut (**15**) from the gearbox mounting.

❑ Lift the vehicle in order to remove the high pressure pump by passing it under the master cylinder.

❑

> Note:
>
> Do not allow the driveshaft to come into contact with the subframe.

II - REMOVAL OPERATION FOR PART CONCERNED

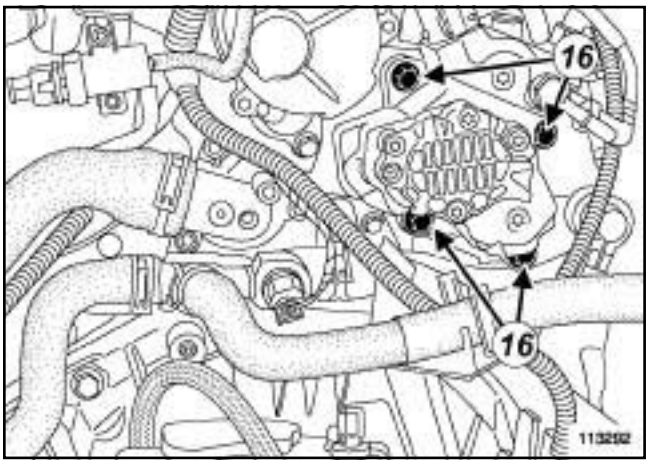

113292

❑ Remove:

- the high pressure pump bolts (**16**) ,
- the high-pressure pump.

B84 or C84 or E84 or K84 or L84, and M9R

REFITTING

I - REFITTING PREPARATION OPERATION FOR REPLACING THE HIGH PRESSURE PUMP

- ❑ Lock the high pressure pump pinion on the work-bench in a vice with protective jaws.
- ❑ Remove the high pressure pump gear nut.

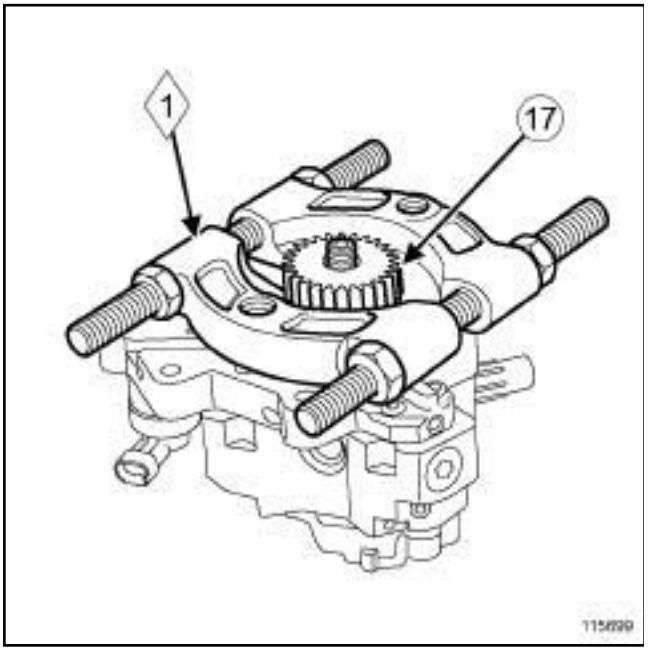

115699

- ❑ Fit a separator (**1**) under the high pressure pump sprocket (**17**) .

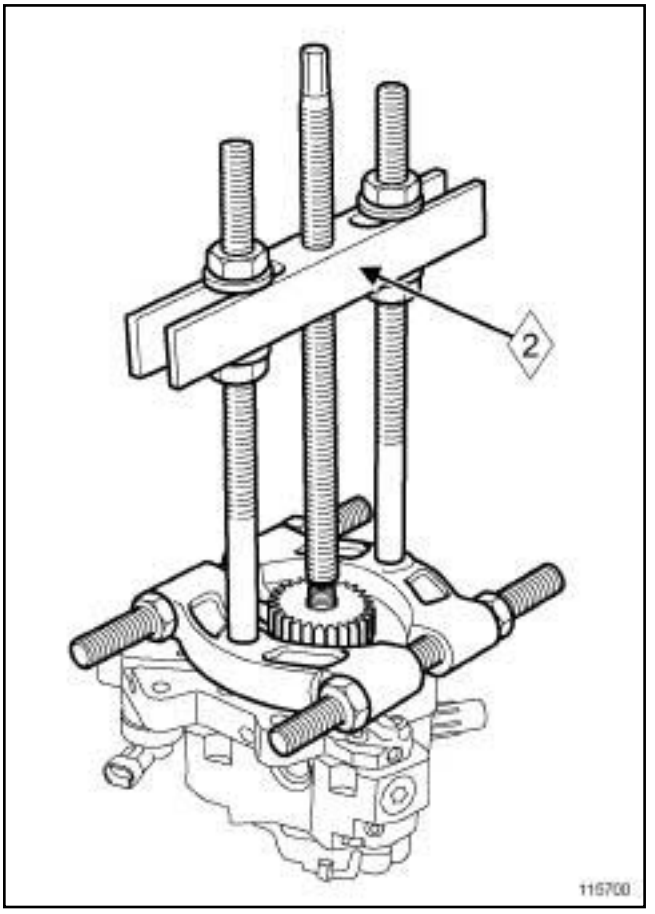

115700

- ❑ Fit an arm (**2**) on the separator.
- ❑ Remove the high pressure pump sprocket.
- ❑ Remove the separator and the arm.
- ❑ Refit the sprocket on the high pressure pump in place.
- ❑ Finger tighten the new nut until contact.
- ❑ Lock the high pressure pump pinion on the work-bench in a vice with protective jaws.
- ❑ Tighten the **high pressure pump pinion nut (90 N.m)**.

B84 or C84 or E84 or K84 or L84, and M9R

II - REFITTING OPERATION FOR PART CONCERNED

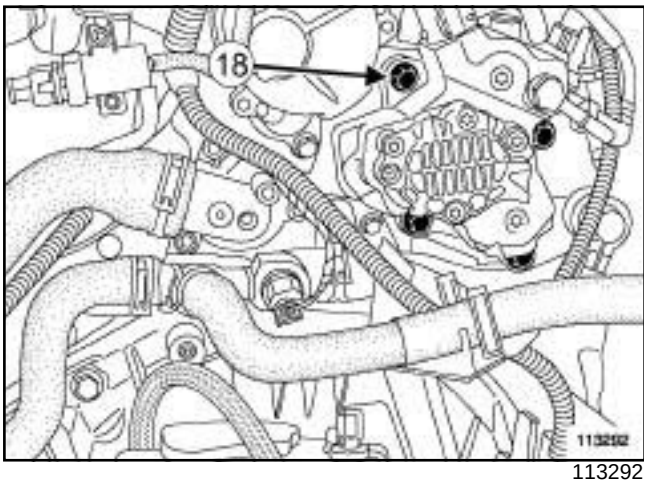

113292

❑ Always replace:

- the high pressure pump O-ring,
- the high pressure pump bolt (**18**) .

> **WARNING**
> Do not remove the blanking plugs from each component until the last moment.

❑ Lubricate the new high-pressure pump seal with engine oil.

❑ Fit the high pressure pump.

> **WARNING**
> Do not apply pressure to the high-pressure pump gear teeth.

> **WARNING**
> Check that the high-pressure pump is in contact with the cylinder head before positioning the bolts.

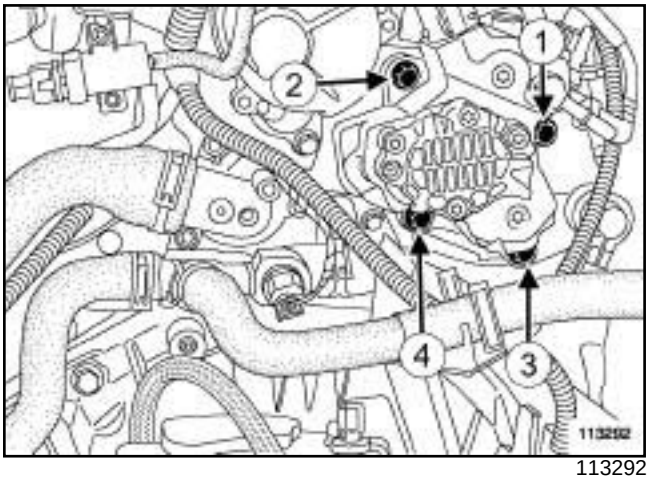

113292

❑ Finger tighten the high pressure pump bolts until contact is made.

❑ Tighten in order (**1**) - (**2**) - (**3**) - (**4**) and to torque the **high pressure pump bolts (25 N.m)**.

B84 or C84 or E84 or K84 or L84, and M9R

III - FINAL OPERATION.

❑ Move the « wiring harness and fuel pipe » assembly to one side.

> **WARNING**
>
> Do not lubricate high pressure pipes supplied without an applicator, as these high pressure pipes are self-lubricating.
>
> Do not allow oil into the high-pressure pipe.

❑ Check that the seal is correctly positioned on the high-pressure pipe.

❑ Remove the blanking plugs.

❑ Connect:

- the fuel supply quick-release union on the high pressure pump,
- the high pressure pump fuel return union,
- the pressure regulator connector on the high pressure pump.

❑ Refit:

- the high pressure pipe between the pump and the rail (see **13B**, **Diesel injection**, **High-pressure pipe between the pump and rail: Removal - Refitting**, page **13B-160**) ,
- the brake servo pipe on the vacuum pump,
- the oil decanter (see **11A**, **Top and front of engine**, **Oil decanter: Removal - Refitting**, page **11A-301**) .

❑ Carry out a test using scenario **SC035** (high pressure fuel circuit fault finding) if replacing, removing or refitting (see **Fault finding - Interpretation of commands**) (MR 366, 13B, Diesel injection).

❑ Refit the rail protector (see **13B**, **Diesel injection**, **Injector rail protector: Removal - Refitting**, page **13B-154**) .

❑ Refit the left-hand rubber pad nut on the gearbox mounting.

❑ Lower the vehicle.

❑ Torque tighten the **left-hand rubber pad nut on the gearbox mounting (62 N.m)**

❑ Refit the rear suspended engine mounting (see **19D**, **Engine mounting**, **Lower engine tie-bar: Removal - Refitting**, page **19D-36**) .

M9R, and 724

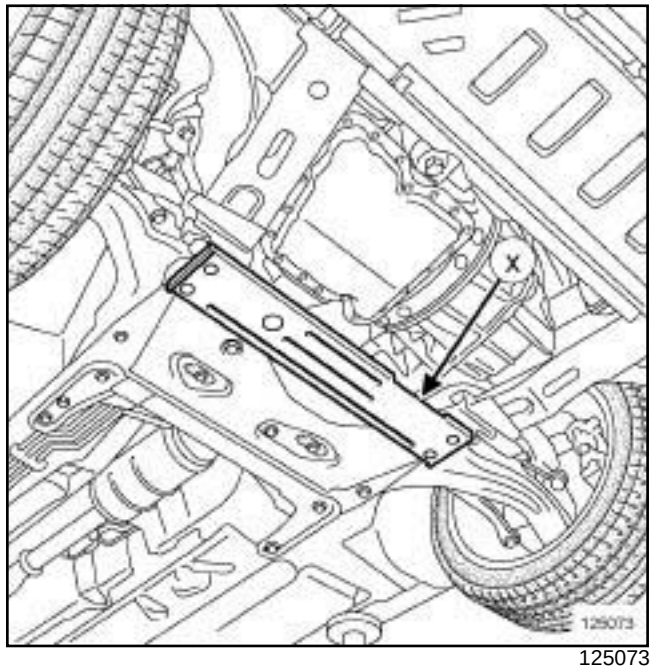

125073

❑

> Note:
>
> Position the indent (**x**) of the reinforcement lower cross member on the gearbox side.

❑ Refit:

- the reinforcement lower cross member,
- the reinforcement lower cross member nuts.

❑ Torque tighten the **reinforcement lower cross member nuts (62 N.m)**.

❑ Remove the **(Mot. 1390)**.

❑ Refit:

- the air filter box (see **12A**, **Fuel mixture**, **Air filter unit: Removal - Refitting**, page **12A-11**) ,
- the front end panel,
- the front end panel upper bolts,
- the front end panel lower bolts,

❑ Torque tighten:

- the **front end panel upper bolts (21 N.m)**,
- the **front end panel lower bolts (44 N.m)**.

❑ Clip on the air inlet.

❑ Connect the engine accessories unit connectors.

B84 or C84 or E84 or K84 or L84, and M9R

- ❑ Clip the bonnet opening cable.
- ❑ Refit:
  - the front end panel clips,
  - the front end panel upper bolts.
- ❑ Connect the screen washer pipes.
- ❑ Refit:
  - the engine accessories unit cover,
  - the engine accessories unit cover bolts,
  - the front bumper (see **Front bumper: Removal - Refitting**) (MR 365, 55A, Exterior protection),
  - the engine cover.
- ❑ Prime the diesel circuit using the manual priming pump.
- ❑ Connect the battery (see **Battery : Removal - Refitting**) (MR 364, 80A, Battery).

WARNING

Check that there are no diesel leaks:

- run the engine at idle speed,
- accelerate several times at no load,
- carry out a road test,
- switch off the ignition,
- check that there is no diesel fuel escaping.

B84 or C84 or G84 or S84, and F9Q, and 816 or 818

Essential special tooling	
Mot. 1668	Locking high pressure pump sprocket.
Mot. 1525	Extractor for timing gear with tapered hub.
Mot. 1525-03	Adapter sockets for Mot.1525. (for 33-tooth pulley).

Essential equipment
diagnostic tool

Tightening torques ▽	
high pressure pump bolts on the pump mountings	**30 Nm**
high pressure pump pulley nut	**50 Nm**
high pressure pump front support bolts on the cylinder head	**20 Nm + 80°**
high pressure pump rear mounting M6 bolt on the high pressure pump	**10 Nm**
high pressure pump rear mounting M10 bolt on the cylinder block	**44 Nm**
high pressure pump rear mounting M8 bolt on the high pressure pump	**23 Nm**

IMPORTANT

Before carrying out any work on the injection system, check using the **diagnostic tool** :

- that the injector rail is not under pressure,

- that the fuel temperature is not too high.

Loosening a high pressure pipe union when the engine is running is strictly prohibited.

IMPORTANT

Consult the safety and cleanliness advice and operation recommendations before carrying out any repair (see **13B**, **Diesel injection**, **Diesel injection: Precautions for repair**, page **13B-12**) .

WARNING

Dismantling the interior of the high-pressure pump and the injectors is prohibited.

Note:

Ensure that any high pressure pipe removed is replaced.

REMOVAL

I - REMOVAL PREPARATION OPERATION

❑ Position the vehicle on a two-post lift (see **Vehicle: Towing and lifting**) (MR 364, 02A, Lifting equipment).

❑ Disconnect the battery (see **Battery: Removal - Refitting**) (MR 364, 80A, Battery).

❑ Remove:

- the accessories belt (see **11A**, **Top and front of engine**, **Accessories belt: Removal - Refitting**, page **11A-4**) ,

- the timing belt (see **11A**, **Top and front of engine**, **Timing belt: Removal - Refitting**, page **11A-18**) .

B84 or C84 or G84 or S84, and F9Q, and 816 or 818

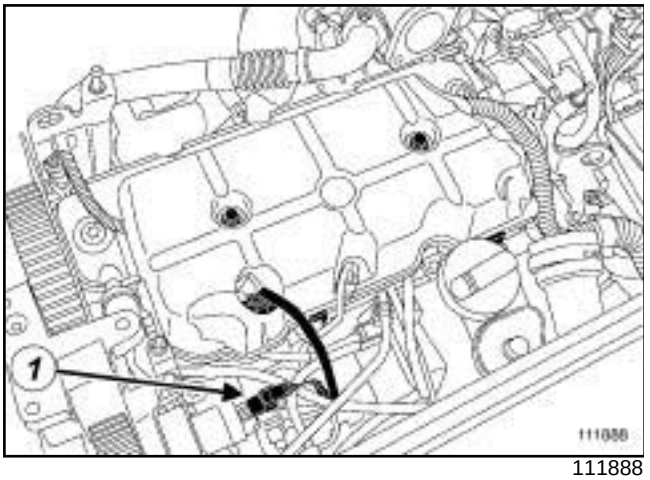

111888

❑ Remove the injector rail protector (see **13B**, **Diesel injection**, **Injector rail protector: Removal - Refitting**, page **13B-154**) .

❑ Disconnect:

- the diesel heater from the diesel filter,
- the heater plugs,
- the pressure regulator (**1**) .

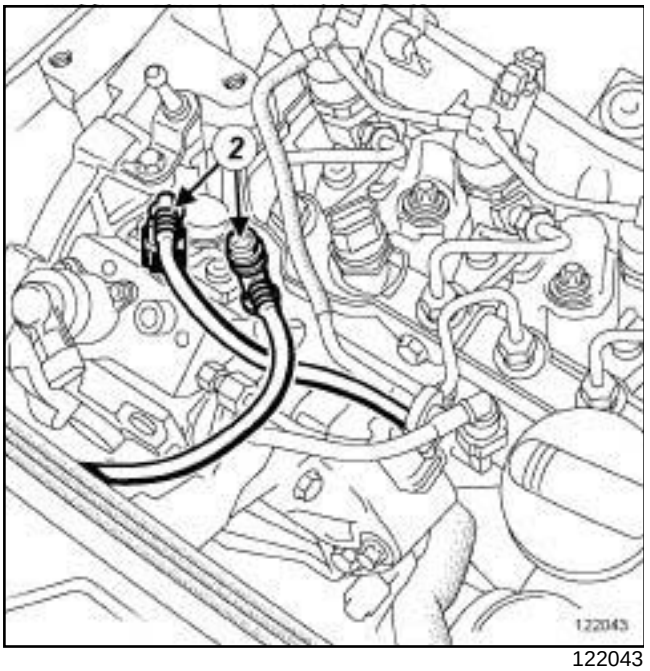

122043

❑ Disconnect the diesel supply and return pipes (**2**) .

❑ Plug the openings.

❑ Remove the retaining clip from the diesel pipes.

122042

❑ Remove the pump-rail high-pressure pipe (**3**) (see **13B**, **Diesel injection**, **High-pressure pipe between the pump and rail: Removal - Refitting**, page **13B-160**) .

❑ Plug the openings.

II - OPERATION FOR REMOVAL OF PART CONCERNED

122044

❑ Remove the bolts (**4**) mounting the high pressure pump to the high pressure pump rear mounting.

B84 or C84 or G84 or S84, and F9Q, and 816 or 818

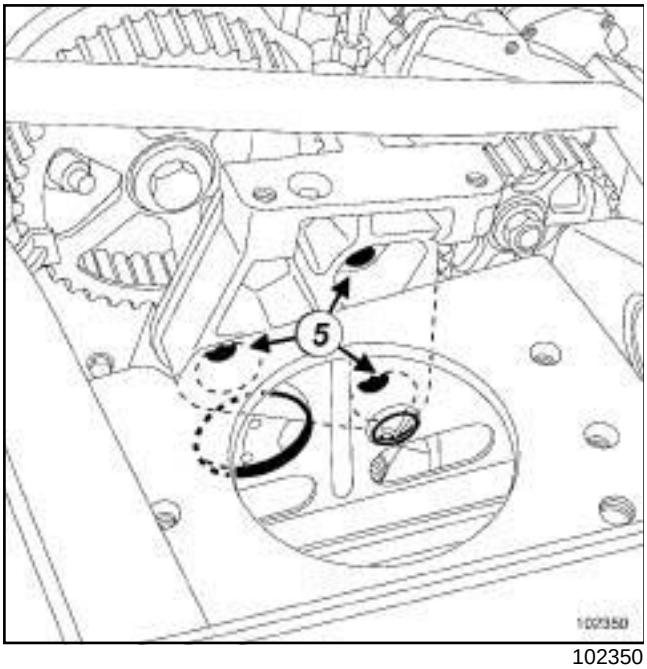

102350

❑ Remove:

- the high pressure pump front support bolts (**5**) ,
- the « high pressure pump - high pressure pump front support » assembly.

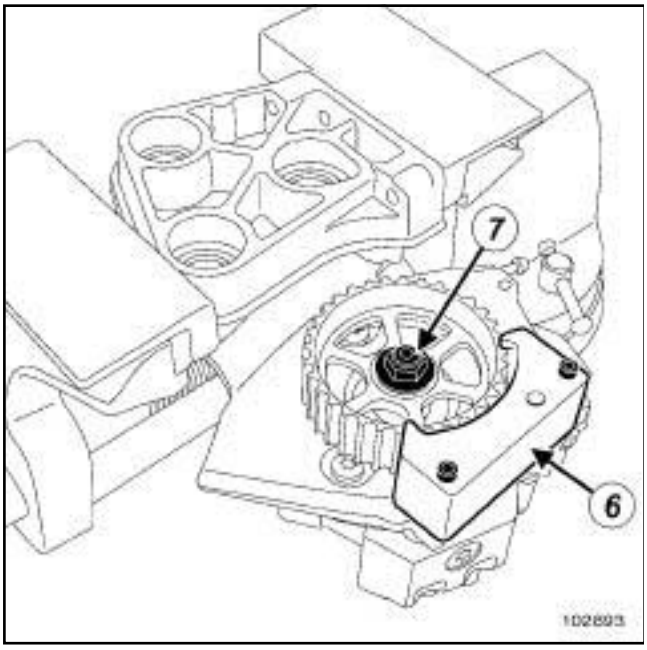

102893

❑ Set up the **(Mot. 1668)** (**6**) .

❑ Remove the nut (**7**) from the high pressure pump pulley.

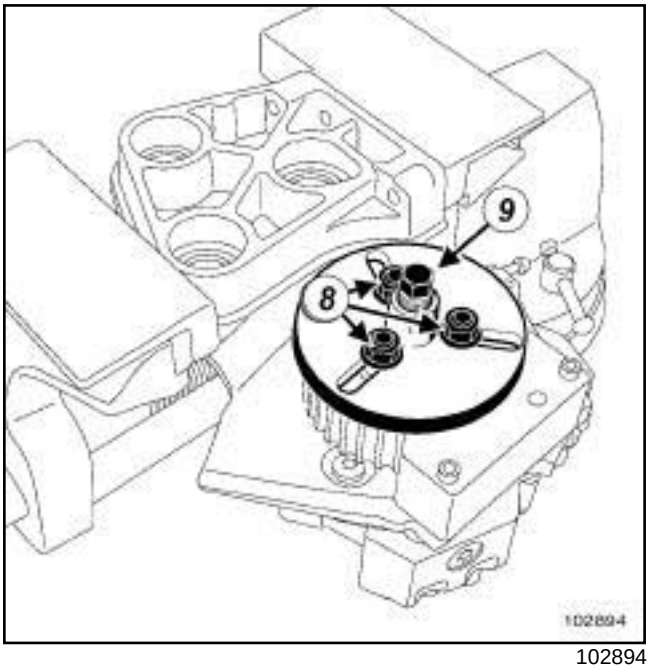

102894

❑ Fit the pulley extractor **(Mot. 1525)** with claws **(Mot. 1525-03)** (**8**) for pulleys with thirty-three teeth.

❑ Extract the pulley by tightening the pulley extractor thrust bolt (**9**) .

❑ Remove the **(Mot. 1525)**, **(Mot. 1525-03)** and **(Mot. 1668)**.

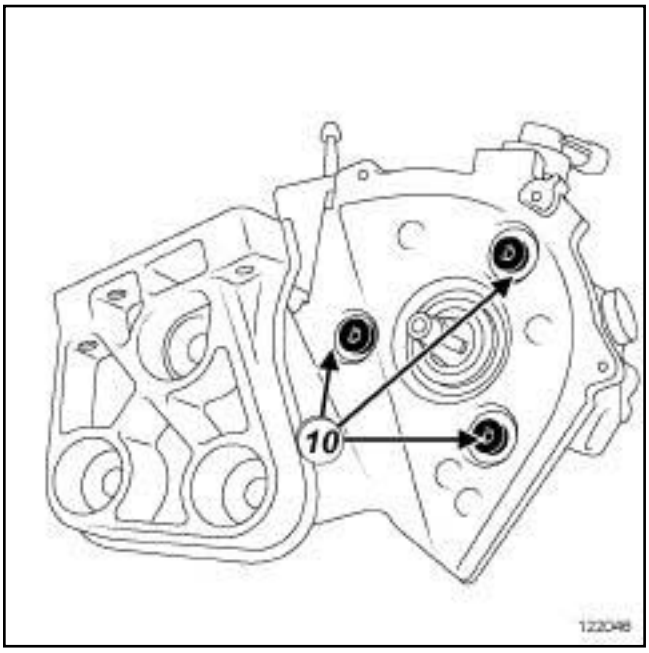

122046

❑ Remove:

- the high pressure pump bolts (**10**) ,
- the high pressure pump.

B84 or C84 or G84 or S84, and F9Q, and 816 or 818

REFITTING

I - REFITTING OPERATION FOR PART CONCERNED

❑

> **WARNING**
> Do not remove the blanking plugs from each component until the last moment.
>
> Also, do not remove the components from their packaging until they are to be fitted to the vehicle.

❑ Refit the high pressure pump bolts on the pump mounting.

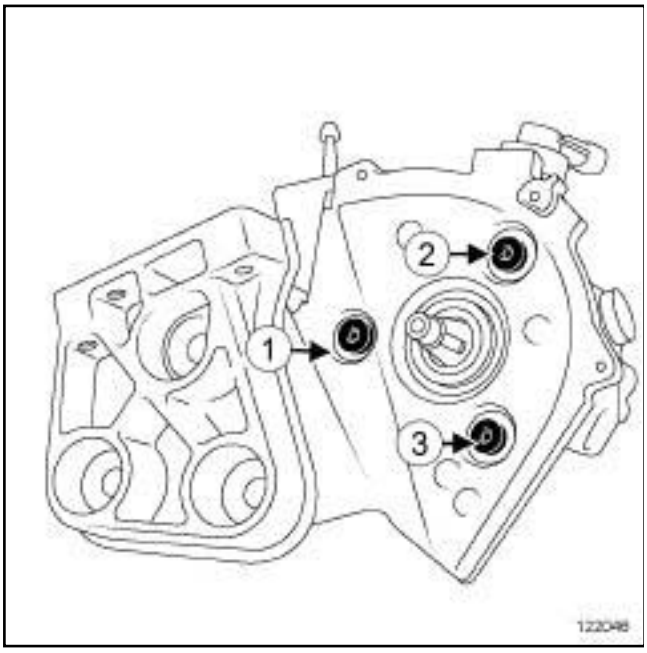

122046

❑ Tighten to torque and in order the **high pressure pump bolts on the pump mountings (30 Nm)**.

❑ Torque tighten the **high pressure pump pulley nut (50 Nm)**, immobilising the pulley with the **(Mot. 1668)**.

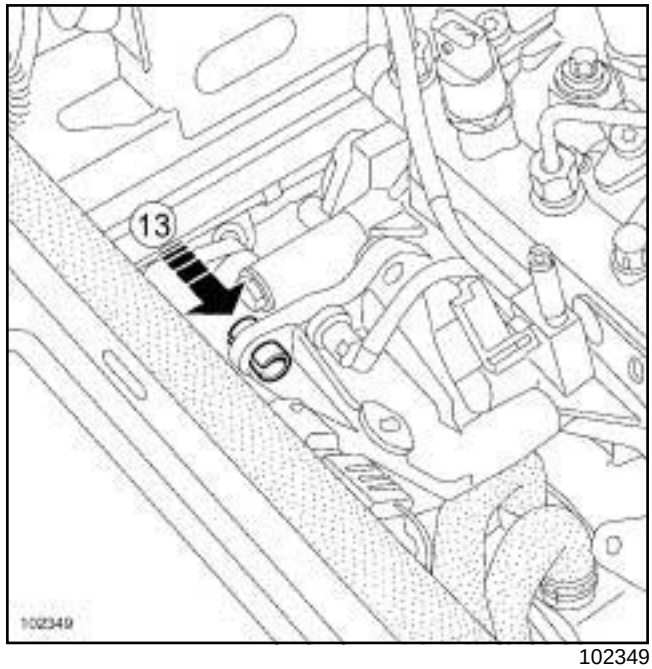

102349

❑ Push the ring (**13**) back as shown in the diagram.

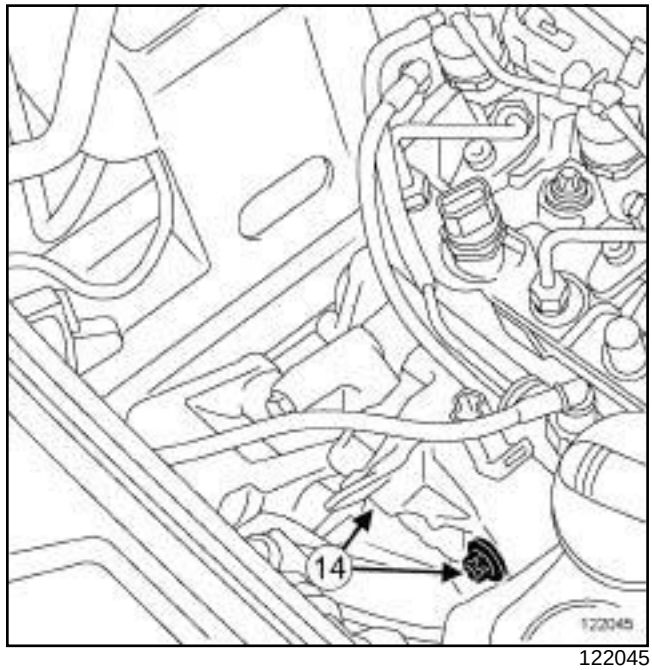

122045

❑ Undo the high pressure pump mounting bolts (**14**) .

❑ Refit the « high pressure pump - pump front support » assembly.

❑ Tighten to torque and in order the **high pressure pump front support bolts on the cylinder head (20 Nm + 80°)**.

B84 or C84 or G84 or S84, and F9Q, and 816 or 818

II - REFITTING THE HIGH PRESSURE PUMP REAR SUPPORT

❏ Fit the « high pressure pump - pump support » assembly bolts, without tightening them, so that the assembly comes into contact with the cylinder head.

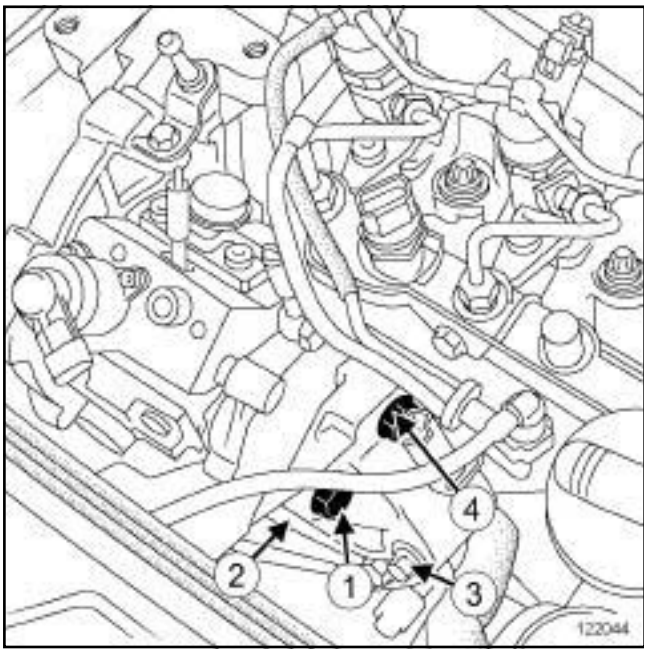

122044

❏ Torque tighten in order:

- the **high pressure pump rear mounting M6 bolt on the high pressure pump (10 Nm)** at (1),
- the **high pressure pump rear mounting M10 bolt on the cylinder block (44 Nm)** at (2),
- the **high pressure pump rear mounting M10 bolt on the cylinder block (44 Nm)** at (3),
- the **high pressure pump rear mounting M8 bolt on the high pressure pump (23 Nm)** at (4).

III - FINAL OPERATION

❏ Refit a new pump-rail high pressure pipe (see **13B**, **Diesel injection**, **High-pressure pipe between the pump and rail: Removal - Refitting**, page **13B-160**) .

❏ Connect:

- the diesel fuel supply and return pipes,
- the pressure regulator,
- the heater plugs,
- the diesel fuel heater from the diesel filter.

❏ Refit:

- the injector rail protector (see **13B**, **Diesel injection**, **Injector rail protector: Removal - Refitting**, page **13B-154**) ,
- the timing belt (see **11A**, **Top and front of engine**, **Timing belt: Removal - Refitting**, page **11A-18**) ,
- the accessories belt (see **11A**, **Top and front of engine**, **Accessories belt: Removal - Refitting**, page **11A-4**) .

❏ Prime the diesel circuit using the manual priming pump.

❏ Connect the battery (see **Battery: Removal - Refitting**) (MR 364, 80A, Battery).

❏ Check that there are no diesel leaks:

- run the engine at idle speed,
- accelerate several times at no load,
- switch off the ignition,
- check that there is no diesel fuel escaping.

Fuel flow actuator: Removal - Refitting

B84 or C84 or G84 or S84, and K9K, and 722

Essential equipment
diagnostic tool
torque wrench

Tightening torques ▽	
flow actuator mounting bolts	**5.5 Nm**
battery cover mounting bolts	**4 Nm**

IMPORTANT

Before carrying out any work on the injection system, check using the CLIP **diagnostic tool** :

• that the injector rail is not under pressure,

• that the fuel temperature is not too high.

- Every time work is carried out, it is essential to follow the safety and cleanliness instructions outlined in this document.
- Loosening a high pressure pipe union when the engine is running is strictly prohibited.

WARNING

- Obtain a set of special high-pressure injection circuit plugs.
- Always replace any high pressure pipe or high pressure pipe clip removed with a new one.

WARNING

Torque tighten to **38 Nm** the « pump-rail » and « rail-injectors » high pressure pipes with part numbers:

- **77 01 207 025**,
- **77 01 207 026**,
- **77 01 207 027**,
- **77 01 207 028**,
- **77 01 207 029**.

For high pressure pipes with different part numbers, tighten to a torque of **24 Nm**.

WARNING

Before starting work on the vehicle, obtain:

- a new set of blanking plugs (part no.: **77 01 206 804**),
- cleaning cloths (part no.: **77 11 211 707**),
- cleaning product (part no.: **77 11 224 188**).

REMOVAL

❑ Remove the engine covers.

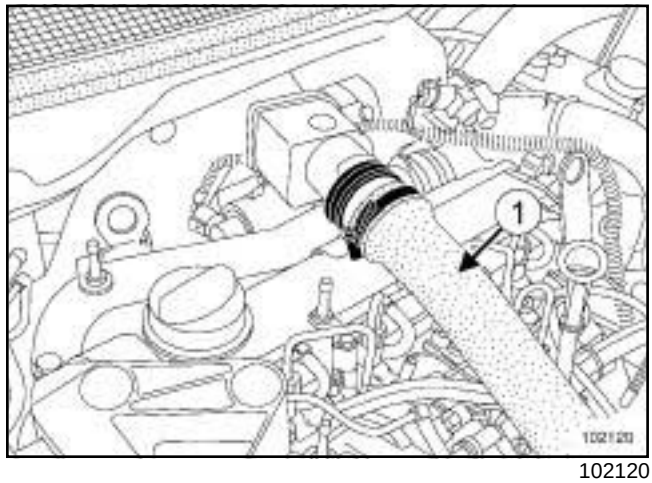

102120

❑ Disconnect:

- the battery (see **Battery : Removal - Refitting**) (MR 364, 80A, Battery),
- the air intake duct (**1**) .

B84 or C84 or G84 or S84, and K9K, and 722

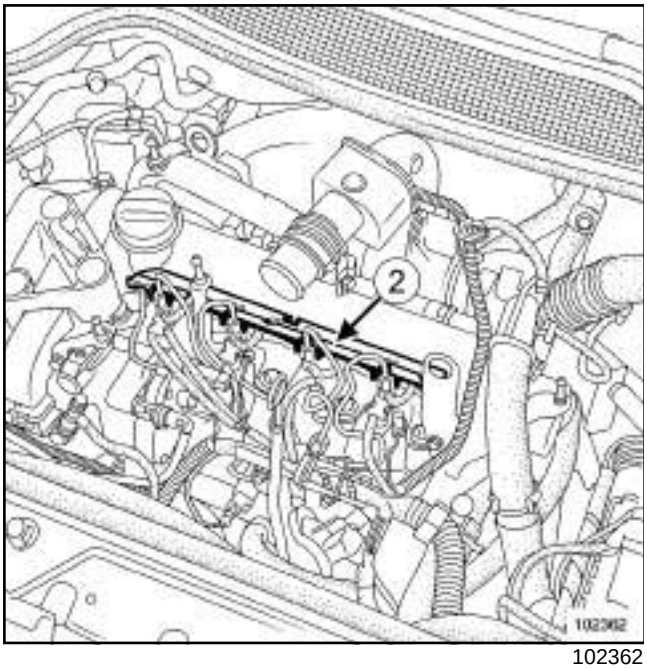

102362

❑ Remove diesel splash plate (**2**) .

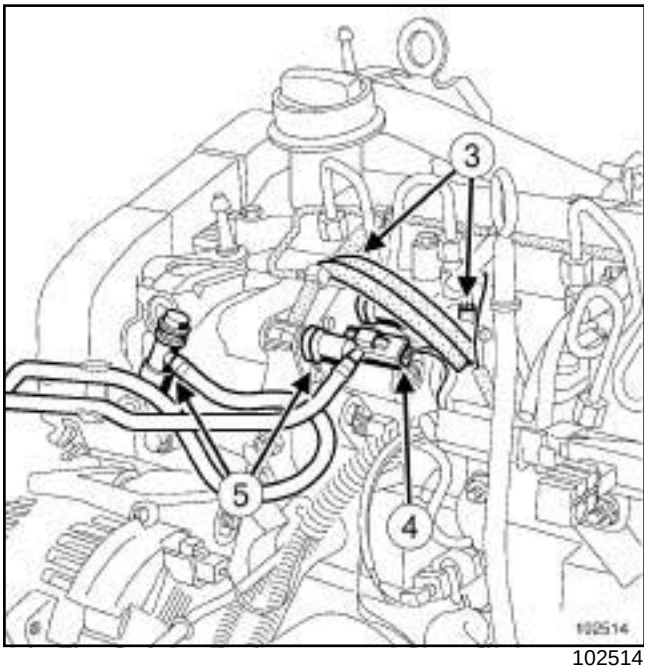

102514

❑ Disconnect:

- the heater plugs,
- the injector connectors (**3**) from cylinders no.3 and no.4,
- the pump electrical connectors (**4**) ,
- the supply and return pipes (**5**) .

❑ Clean the high pressure pipe between the rail and the injector (see **13B**, **Diesel injection**, **Diesel injection: Precautions for repair**, page **13B-12**) .

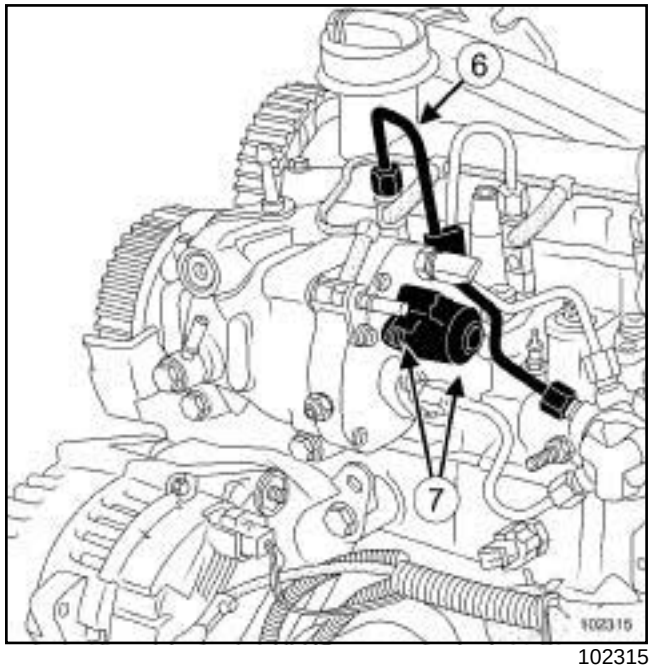

102315

❑ Remove the high pressure pipe (**6**) from injector no.4.

❑ Fit plugs into the openings.

❑ Undo bracket bolts (**7**) .

❑ Remove the fuel flow actuator (by hand with small successive turns).

WARNING
Do not use the electrical connector as a lever arm.

B84 or C84 or G84 or S84, and K9K, and 722

REFITTING

❑

WARNING
Do not remove the blanking plugs from each component until the last moment.

❑ Only unpack the new component when you are ready to fit it.

WARNING
Do not damage the seal when refitting.

Note:
Do not lubricate the seals with grease or old diesel fuel. Use the applicator provided in the kit for the new part.

❑ Fit the actuator.

❑ Finger-tighten the two mounting bolts.

❑ Torque tighten the two **flow actuator mounting bolts (5.5 Nm)** using the **torque wrench**.

❑ Refit a new high pressure pipe to injector no. 4 (see **13B**, **Diesel injection**, **High-pressure pipe between the rail and injector: Removal - Refitting**, page **13B-181**) and a new clip.

❑ Reconnect:

- the diesel fuel supply and return pipes,
- the electrical connectors.

❑ Proceed in the reverse order to removal.

❑ Connect the battery (see **Battery : Removal - Refitting**) (MR 364, 80A, Battery).

❑ Torque tighten the **battery cover mounting bolts (4 Nm)**.

❑ Check the sealing after repair work (see **13B**, **Diesel injection**, **High pressure pipe: Checking**, page **13B-157**) .

WARNING

Check that there are no diesel leaks:

- Let the engine run at idle speed until the engine cooling fan starts up.
- Accelerate several times under no load.
- Switch off the ignition.
- Check that there is no diesel fuel escaping.

Fuel flow actuator: Removal - Refitting

B84 or C84 or G84 or S84, and K9K, and 728 or 729

Essential equipment
diagnostic tool
torque wrench

Tightening torques ▽	
flow actuator mounting bolts	**5.5 Nm**
battery cover mounting bolts	**4 Nm**

IMPORTANT

Before carrying out any work on the injection system, check using the CLIP **diagnostic tool** :

- that the injector rail is not under pressure,
- that the fuel temperature is not too high.

- Every time work is carried out, it is essential to follow the safety and cleanliness instructions outlined in this document.
- Loosening a high pressure pipe union when the engine is running is strictly prohibited.

WARNING

- Obtain a set of special high-pressure injection circuit plugs.
- Always replace any high pressure pipe or high pressure pipe clip removed with a new one.

WARNING

Torque tighten to **38 Nm** the « pump-rail » and « rail-injectors » high pressure pipes with part numbers:

- **77 01 207 025**,
- **77 01 207 026**,
- **77 01 207 027**,
- **77 01 207 028**,
- **77 01 207 029**.

For high pressure pipes with different part numbers, tighten to a torque of **24 Nm**.

REMOVAL

❑ Remove the engine covers.

❑ Disconnect the battery (see **Battery : Removal - Refitting**) (MR 364, 80A, Battery).

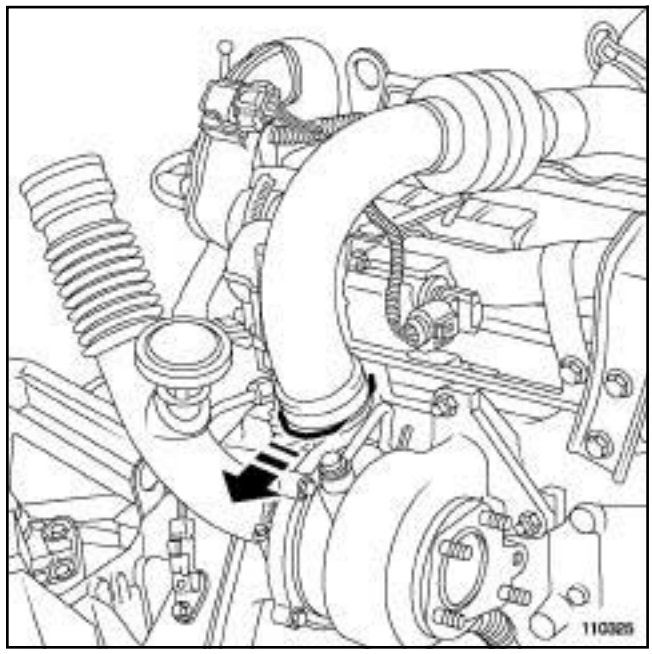

110325

❑ Pull the clip.

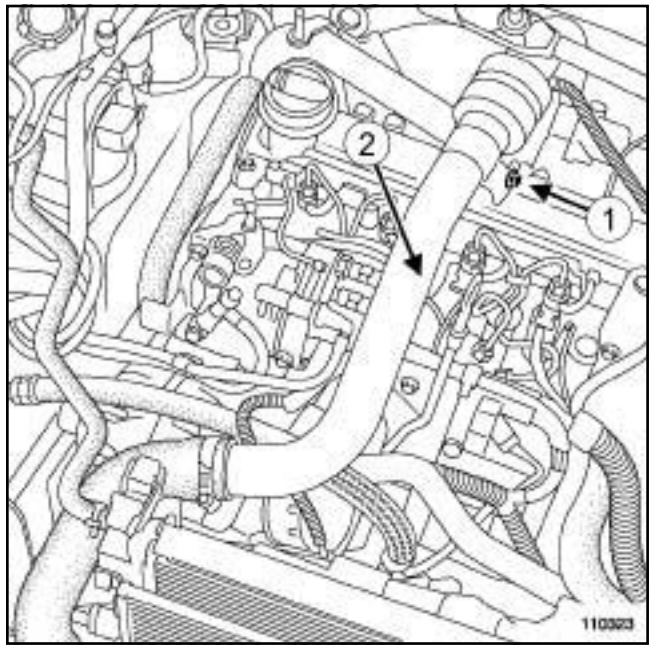

110323

❑ Undo bolt (**1**) .

❑ Remove air duct (**2**) .

B84 or C84 or G84 or S84, and K9K, and 728 or 729

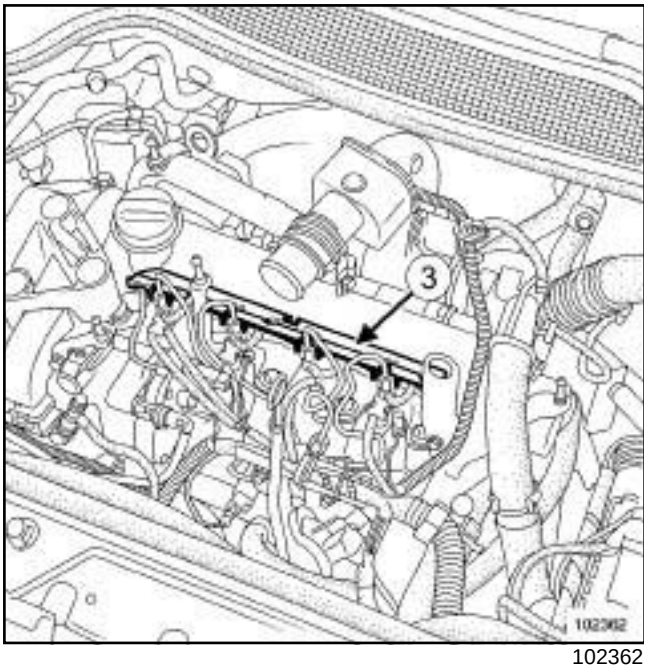

102362

❑ Remove the diesel splash plate (**3**) .

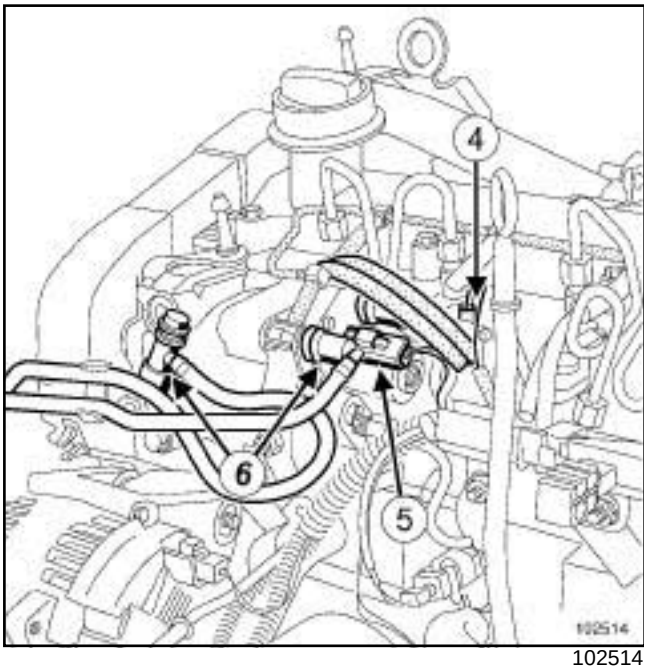

102514

❑ Disconnect:

- the heater plugs,
- the injector connectors (**6**) from cylinders no.3 and no.4,
- the pump electrical connectors (**4**) ,
- the supply and return pipes (**5**) .

❑ Clean the high pressure pipe between the rail and the injector (see **13B**, **Diesel injection**, **Diesel injection: Precautions for repair**, page **13B-12**) .

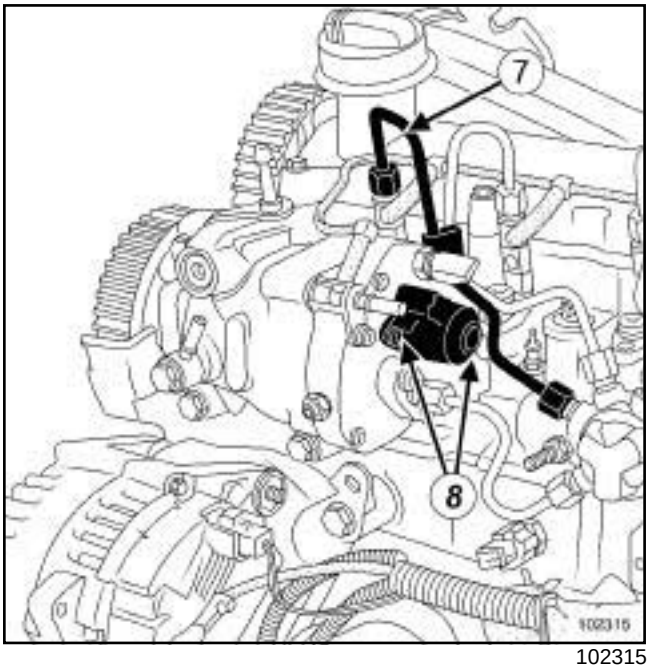

102315

❑ Remove the high pressure pipe (**7**) from injector no.4.

❑ Fit plugs into the openings.

❑ Undo the bracket bolts (**8**) .

❑ Remove the fuel flow actuator (by hand with small successive turns).

WARNING

Do not use the electrical connector as a lever arm.

B84 or C84 or G84 or S84, and K9K, and 728 or 729

REFITTING

❑

> **WARNING**
> Do not remove the blanking plugs from each component until the last moment.

❑ Only unpack the new component when you are ready to fit it.

> **WARNING**
> Do not damage the seal when refitting.

> Note:
> Do not lubricate the seals with grease or old diesel fuel. Use the applicator provided in the kit for the new part.

❑ Fit the actuator.

❑ Finger tighten the mounting bolts.

❑ Torque tighten the two **flow actuator mounting bolts (5.5 Nm)** using the **torque wrench**.

❑ Refit a new high pressure pipe to injector no. 4 (see **13B**, **Diesel injection**, **High-pressure pipe between the rail and injector: Removal - Refitting**, page **13B-181**) and a new clip.

❑ Reconnect:

- the diesel fuel supply and return pipes,
- the electrical connectors.

❑ Proceed in the reverse order to removal.

❑ Connect the battery (see **Battery : Removal - Refitting**) (MR 364, 80A, Battery).

❑ Torque tighten the **battery cover mounting bolts (4 Nm)**.

❑ Check the sealing after repair work (see **13B**, **Diesel injection**, **High pressure pipe: Checking**, page **13B-157**) .

> **WARNING**
>
> Check that there are no diesel leaks:
>
> - Let the engine run at idle speed until the engine cooling fan starts up.
> - Accelerate several times under no load.
> - Switch off the ignition.
> - Check that there is no diesel fuel escaping.

Fuel flow actuator: Removal - Refitting

K4M, and 724

Essential equipment
diagnostic tool
torque wrench

Tightening torques ▽	
flow actuator mounting bolts	**5.5 N.m**
high pressure pipe unions	**24 N.m**

IMPORTANT

Before carrying out any work on the injection system, check using the **diagnostic tool** :

- that the injector rail is not under pressure,
- that the fuel temperature is not too high.

It is essential to respect the safety and cleanliness advice whenever work is carried out on this system.

Loosening a high pressure pipe union when the engine is running is strictly prohibited.

WARNING

Before starting work on the vehicle, obtain:

- a new blanking plug kit (**PART NO. 77 01 206 804**),
- cleaning cloths (**PART NO.77 11 211 707**),
- cleaning product (**PART NO. 77 11 224 188**).

WARNING

Torque tighten (**38 N.m**) the high pressure pipes on the « pump and rail » and « rail and injectors » with one of the following part numbers:

- **77 01 207 025**,
- **77 01 207 026**,
- **77 01 207 027**,
- **77 01 207 028**,
- **77 01 207 029**.

For high pressure pipes with different part numbers, tighten to a torque of **24 N.m**.

WARNING

Parts which must always be replaced:

- all the high pressure pipes which have been removed.

REMOVAL

I - REMOVAL PREPARATION OPERATION

❑ Disconnect the battery (see **Battery : Removal - Refitting**) (80A, Battery).

❑ Remove the engine protector.

K4M, and 724

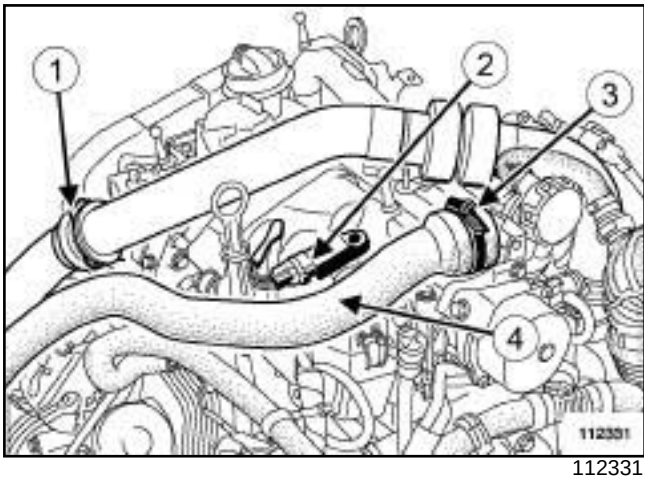

112331

- ❑ Remove the turbocharging duct retaining pin from the turbocharger (**1**) .
- ❑ Remove the bolt mounting the pipe on the cylinder head.
- ❑ Move the duct to one side.
- ❑ Disconnect the inlet air pressure sensor (**2**)
- ❑ Loosen the clip (**3**) .
- ❑ Move the inlet air duct to one side (**4**) .
- ❑ Remove:
  - the dipstick,
  - the dipstick pipe mounting bolts.
- ❑ Move the dipstick duct to one side.
- ❑ Unclip the upper section of the injector rail protector.
- ❑ Unscrew the upper section of the injector rail protector.
- ❑ Remove:
  - the injector rail protector,
  - Remove the high pressure pump protector plate.
- ❑ Protect the alternator from fuel outflow.
- ❑ Clean the pipe (see **13B**, **Diesel injection**, **Diesel injection: Precautions for repair**, page **13B-12**) .

WARNING
Do not blast with compressed air once the fuel circuit is open, otherwise impurities may enter the system. Use cloths if necessary.

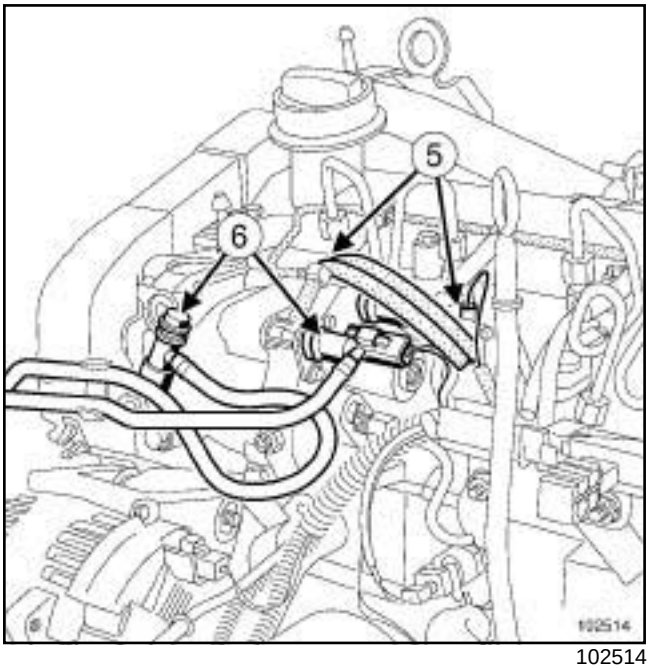

102514

- ❑ Disconnect:
  - the heater plugs on cylinders no. 3 and 4,
  - the injector connectors from cylinders no. 3 and 4 (**5**) ,
  - the diesel supply and return pipes (**6**) ,
  - the high pressure pump electrical connectors.
- ❑ Fit the correct blanking plugs on:
  - the high pressure pump,
  - the pipes.

K4M, and 724

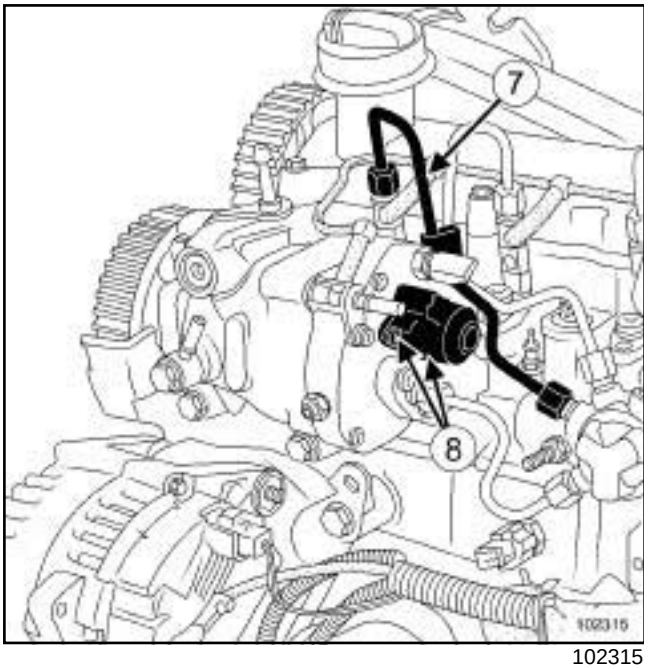

102315

❑ Disconnect:

- the diesel temperature sensor,
- the flow actuator.

❑ Remove the high pressure pipe (**7**) between the rail and injector no.4.

❑ Fit the correct blanking plugs on:

- the rail,
- the injector.

II - REMOVAL OF THE PART CONCERNED

❑ Unscrew the two mounting bolts ***(8)*** on the flow actuator.

❑ Withdraw the fuel flow actuator (by hand using small successive turns).

> **WARNING**
> Do not use the electrical connector as a lever arm.

REFITTING

I - REFITTING PREPARATION OPERATION

❑

> **WARNING**
> Do not remove the blanking plugs from each component until the last moment.

❑ Only unpack the new component when you are ready to fit it.

> **WARNING**
> Do not damage the seal when refitting.

> Note:
> Do not lubricate the actuator seals with grease or used diesel oil. Use the applicator provided in the kit for the new part.

II - REFITTING PART CONCERNED

❑ Fit the actuator.

❑ Finger tighten the two mounting bolts.

❑ Torque tighten the two **flow actuator mounting bolts (5.5 N.m)** using a **torque wrench**.

III - FINAL OPERATION

❑ Fit a new high pressure pipe to injector no. 4 and a new clip.

❑

❑ Torque tighten the **high pressure pipe unions (24 N.m)** using theor.

❑ Connect:

- the high pressure pump electrical connectors,
- the diesel supply and return pipe.
- the injector connectors from cylinders no. 3 and 4,
- the heater plugs.

❑ Refit:

- the high pressure pump protector plate.
- the upper section of the injector rail protector.
- the dipstick pipe.

❑ Refit the air inlet duct.

❑ Connect the inlet air pressure sensor.

❑ Fit the turbocharger air duct.

❑ Lock the air duct onto the turbocharger and the intercooler inlet air pipe.

❑ Tighten the bolt of the air duct on the rocker cover.

❑ Refit the engine undertray.

❑ Connect the battery (see **Battery : Removal - Refitting**) (80A, Battery).

K4M, and 724

❑ Check the sealing after repair work (see **13B**, **Diesel injection**, **High pressure pipe: Checking**, page **13B-157**) .

WARNING

Check that there are no diesel leaks:

- let the engine run at idle speed until the engine cooling fan starts to operate,
- accelerate several times at no load,
- switch off the ignition,
- check that there is no diesel fuel escaping.

K9K, and 724

IMPORTANT
To avoid all risk of damage to the systems, apply the safety and cleanliness instructions and operation recommendations before carrying out any repair (see **13B**, **Diesel injection**, **Diesel injection: Precautions for repair**, page **13B-12**) .

Note:
Ensure that you have a new flow actuator before opening up the fuel circuit.

REMOVAL

I - REMOVAL PREPARATION OPERATION

❏ Remove the front engine cover.

❏ Disconnect the battery (see **Battery: Removal - Refitting**) (80A, Battery).

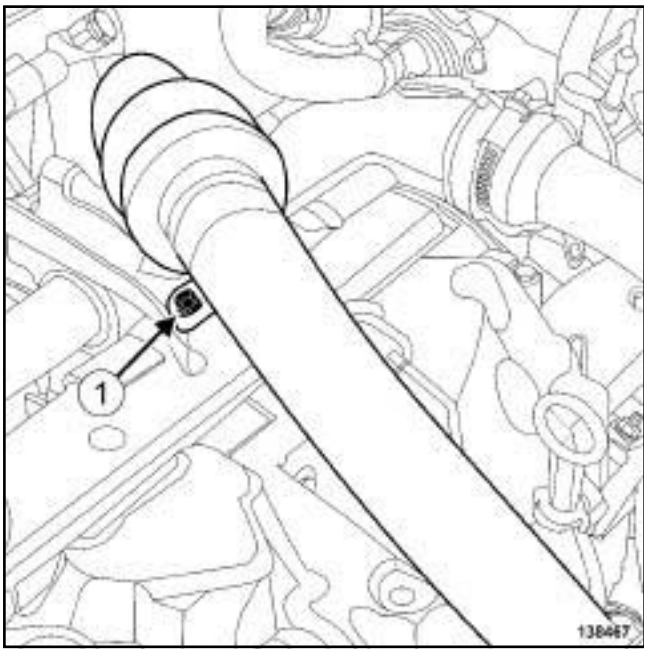

138467

❏ Remove the bolt (**1**) on the intercooler air inlet pipe.

123299

❏ Pull the clip (**2**) from the intercooler inlet air pipe.

❏ Disconnect the intercooler air inlet pipe.

❏ Move aside the intercooler air inlet pipe.

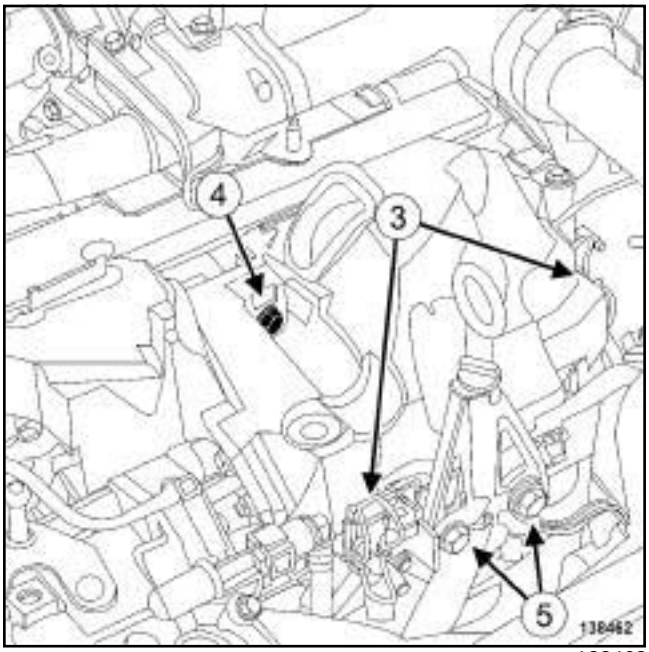

138462

❏ Unclip the injector rail protector cover at (**3**) .

❏ Remove:

- the injector rail protector cover bolt (**4**) ,
- the injector rail protector cover,
- the dipstick support bolts (**5**) .

❏ Move aside the dipstick support.

K9K, and 724

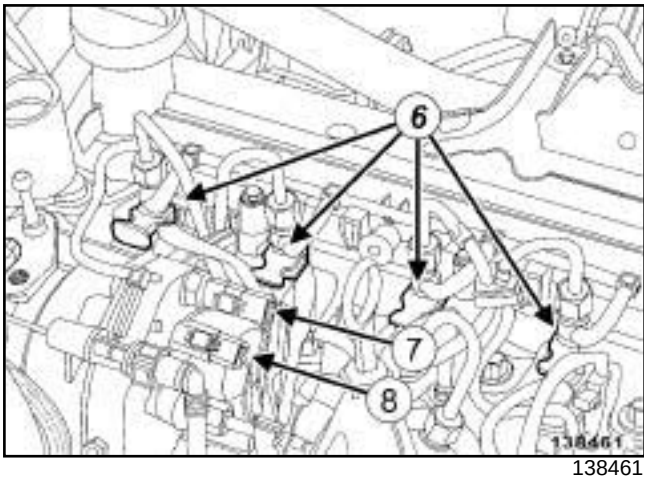

138461

❑ Disconnect:

- the heater plug connectors ,
- the injector connectors (**6**) ,
- the fuel temperature sensor connector (**7**) ,
- the flow actuator connector (**8**) .

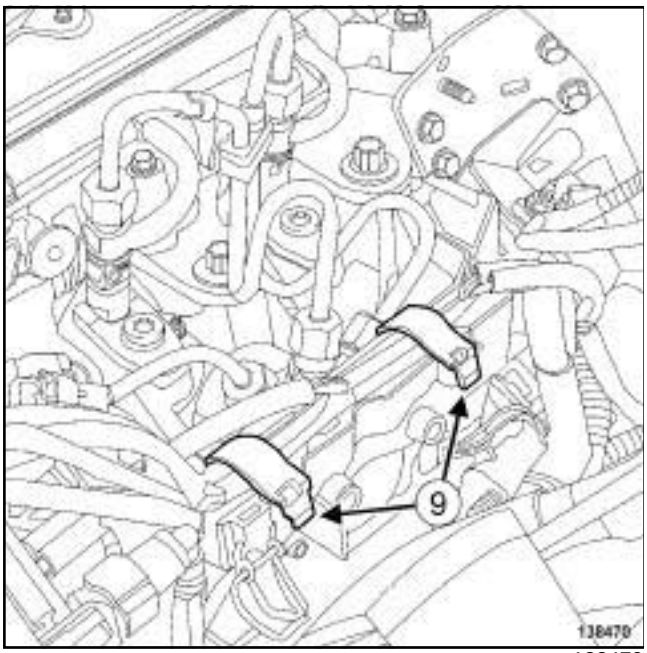

138470

❑ Unclip the injection wiring clips (**9**) .

❑ Move aside the injection wiring.

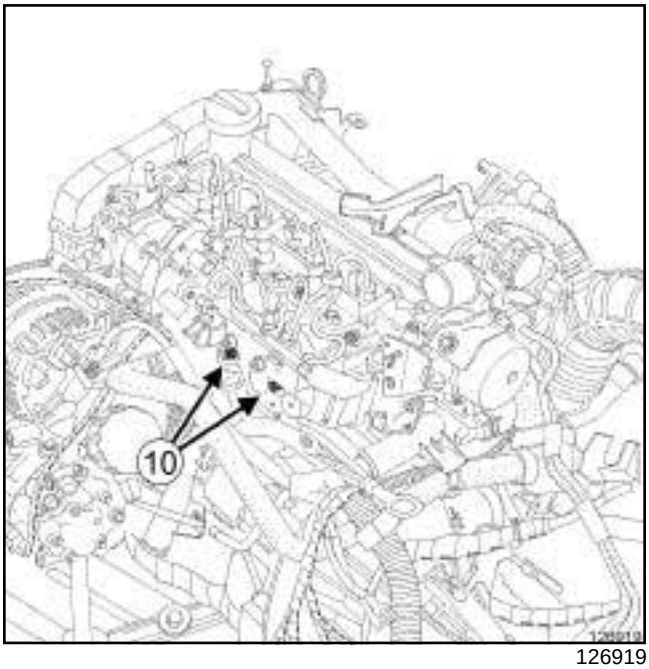

126919

❑ Remove:

- the bolts (**10**) from the injector rail protector,
- the injector rail protector.

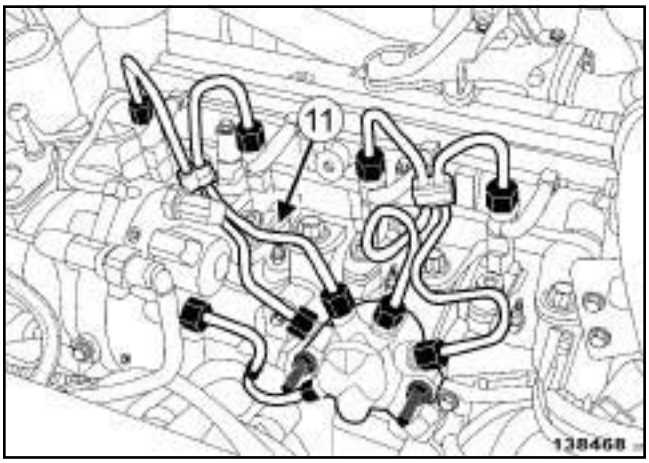

138468

❑ Remove the high pressure pipe (**11**) between the rail and the injector (see **13B**, **Diesel injection**, **High-pressure pipe between the rail and injector: Removal - Refitting**, page **13B-181**) .

K9K, and 724

II - OPERATION FOR REMOVAL OF PART CONCERNED

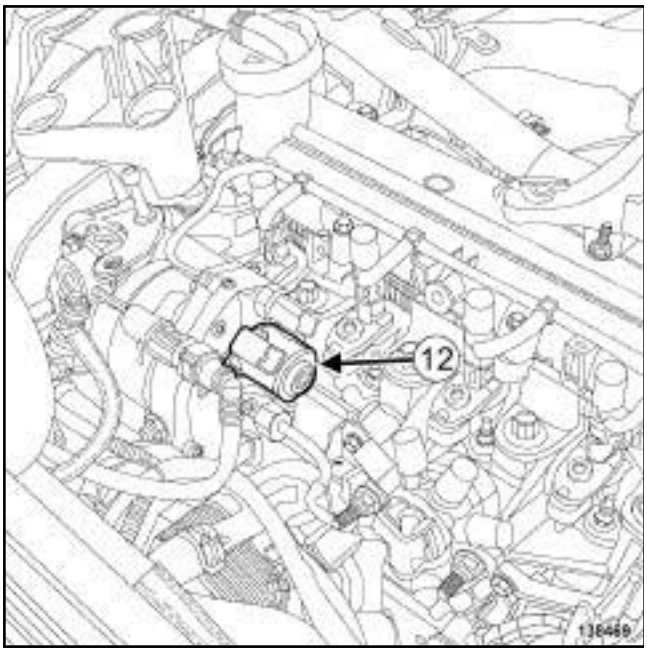

138469

❑ Remove:

- the bolts from the flow actuator bracket,
- the fuel flow actuator (**12**) ,
- the flow actuator seal.

> **WARNING**
> Do not blast with compressed air once the fuel circuit is open, otherwise impurities may enter the system. Only use cleaning cloths.

REFITTING

I - REFITTING PREPARATION OPERATION

❑ **parts always to be replaced: Fuel flow regulator seal on injection pump (11,05,10,20)**.

> **WARNING**
> Do not remove the blanking plugs from each component until the last moment.
>
> Also, do not remove the components from their packaging until they are to be fitted to the vehicle.

II - REFITTING OPERATION FOR PART CONCERNED

❑ Refit a new seal on the flow actuator.

❑ Refit the flow actuator to the high pressure pump.

III - FINAL OPERATION

❑ Refit the high pressure pipe between the rail and the injector (see **13B**, **Diesel injection**, **High-pressure pipe between the rail and injector: Removal - Refitting**, page **13B-181**) .

❑ Refit:

- the injector rail protector,
- the injector rail protector bolts.

❑ Clip on the injection wiring clips.

❑ Connect:

- the injector connectors,
- the heater plug connectors ,
- the fuel temperature sensor connectors,
- the flow actuator connector.

❑ Refit:

- dipstick guide ,
- the dipstick guide tube bolts.

❑ Prime the fuel circuit using a manual priming pump until the pipes are filled with fuel.

❑ Check that there are no fuel leaks.

❑ Refit:

- the injector rail protector cover,
- the intercooler air inlet pipe.

❑ Connect the intercooler air inlet pipe on the turbocharger.

❑ Fit the clip of the intercooler air inlet pipe on the turbocharger.

❑ Refit the bolt on the intercooler air inlet pipe.

❑ Connect the battery (see **Battery : Removal - Refitting**) (80A, Battery).

❑ Start the engine.

❑ Check that there are no fuel leaks.

❑ Refit the engine cover.

Fuel pressure regulator: Removal - Refitting

B84 or C84 or G84 or S84, and F9Q, and 800 or 808

Essential equipment
torque wrench
diagnostic tool

Tightening torques ▽	
regulator bolts	**6 Nm**
battery cover mounting bolts	**4 Nm**

It is essential to read the repair precautions when carrying out any operation (see **13B**, **Diesel injection**, **Diesel injection: Precautions for repair**, page **13B-12**) .

WARNING

Once the warranty period for the high pressure pump has expired, only the pressure regulator can be replaced separately.

Whilst the warranty period for the high pressure pump is still valid, the high pressure pump should be replaced as a whole if the pressure regulator displays a fault.

REMOVAL

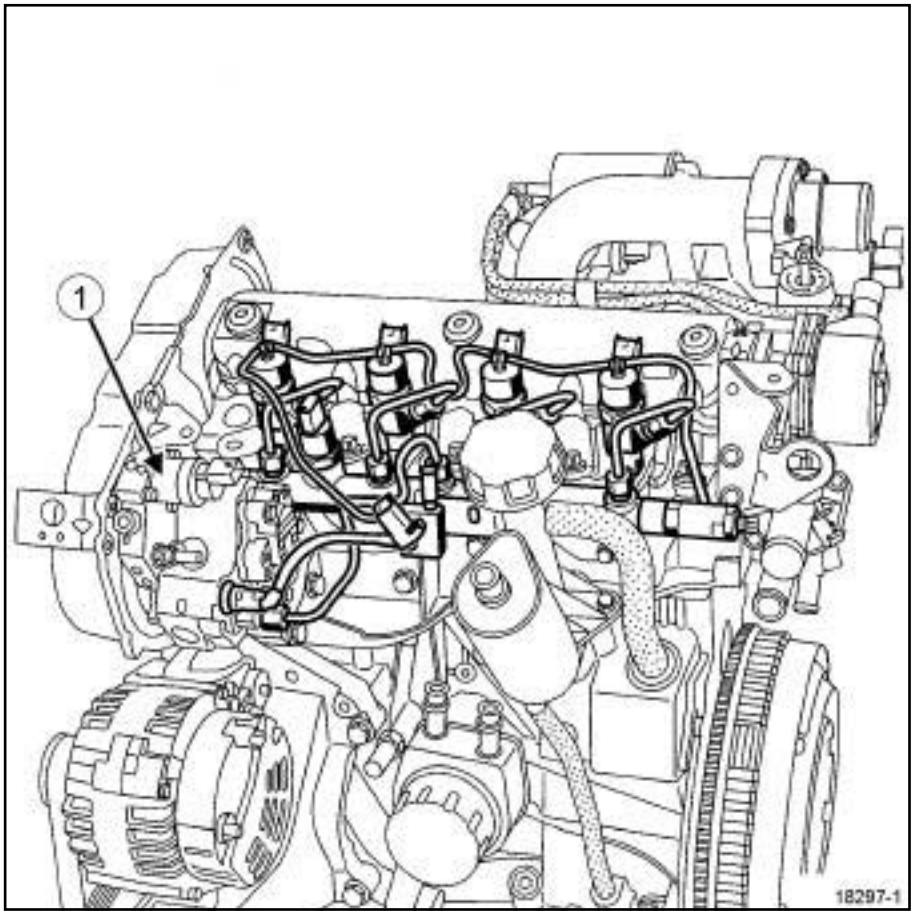

18297-1

- ❑ Disconnect the battery (see **Battery: Removal - Refitting**) (MR 364, 80A, Battery).
- ❑ Blast the area with compressed air to clean impurities from around the fuel pressure regulator.
- ❑ Disconnect the fuel pressure regulator connector.
- ❑ Clean the area with cleaning product (see **13B**, **Diesel injection**, **Diesel injection: Precautions for repair**, page **13B-12**) .
- ❑ Remove:
  - fuel pressure regulator bolts (**1**) ,
  - the fuel pressure regulator (remove manually: do not use a tool to lever it out).

B84 or C84 or G84 or S84, and F9Q, and 800 or 808

REFITTING

- ❑ Clean the fuel pressure regulator bearing face on the high pressure pump, taking care not to introduce any impurities.
- ❑ Clean the fuel pressure regulator bearing face on the high pressure pump with new wipes (see **13B**, **Diesel injection**, **Diesel injection: Precautions for repair**, page **13B-12**) .
- ❑ Prepare the new regulator:

  - remove the protective cap,
  - check the position of the seals,
  - lubricate the O-rings with clean diesel fuel.

> Note:
>
> Lubrication is very important to avoid external leaks.

- ❑ Offer up the regulator, rotating it slightly.
- ❑ Push the regulator gently in until it engages fully.
- ❑ Pre-tighten the new regulator bolts to **3 Nm**.
- ❑ Torque tighten the three **regulator bolts (6 Nm)** with a **torque wrench**.
- ❑ Clean the area with fresh wipes.
- ❑ Fit the fuel pressure regulator connector.
- ❑ Connect the battery (see **Battery : Removal - Refitting**) (MR 364, 80A, Battery).
- ❑ Torque tighten the **battery cover mounting bolts (4 Nm)**.
- ❑ Switch on the ignition.
- ❑ Clear the fault indicated on the CLIP **diagnostic tool** if necessary.

> **WARNING**
>
> Check that there are no diesel leaks:
>
> - run the engine at idle speed,
> - accelerate several times at no load,
> - switch off the ignition,
> - check that there is no diesel fuel escaping.

Fuel pressure regulator: Removal - Refitting

B84 or C84 or G84 or S84, and F9Q, and 803 or 804

Essential equipment
torque wrench
diagnostic tool

Tightening torques ▽	
regulator bolts	**6 N.m**
battery cover mounting bolts	**4 N.m**

Always read the repair precautions before carrying out any work (see **13B**, **Diesel injection**, **Diesel injection: Precautions for repair**, page **13B-12**) .

WARNING

Once the warranty period for the high pressure pump has expired, only the pressure regulator can be replaced separately.

Whilst the warranty period for the high pressure pump is still valid, the high pressure pump should be replaced if the pressure regulator displays a fault.

REMOVAL

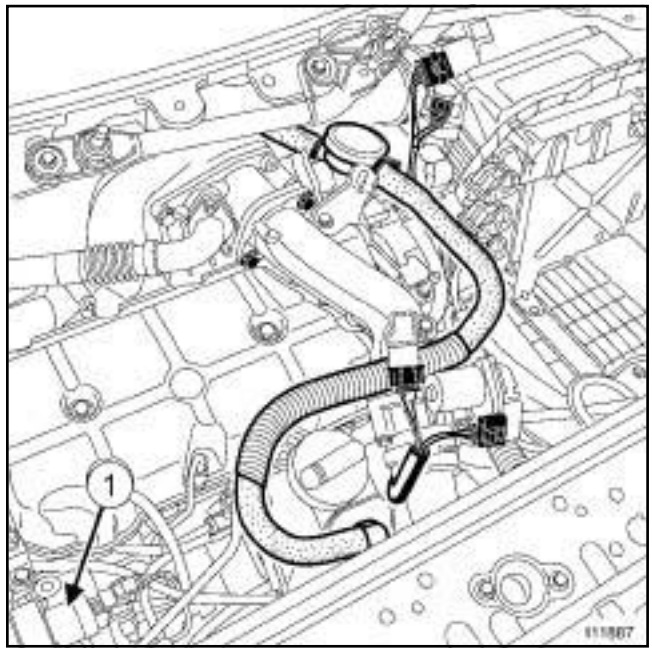

111887

- ❑ Disconnect the battery, starting with the negative terminal.
- ❑ Blow compressed air into the area to clean dirt from around the fuel pressure regulator.
- ❑ Disconnect the fuel pressure regulator connector.
- ❑ Clean the area with cleaning product (see **13B**, **Diesel injection**, **Diesel injection: Precautions for repair**, page **13B-12**) .
- ❑ Remove:
  - the fuel pressure regulator bolts (**1**) ,
  - the fuel pressure regulator (remove manually: do not use a tool to lever it out).

B84 or C84 or G84 or S84, and F9Q, and 803 or 804

REFITTING

- Clean the fuel pressure regulator bearing face on the high pressure pump, taking care not to introduce any impurities.
- Wipe the bearing face of the fuel pressure regulator on the high pressure pump using new wipes (see **13B**, **Diesel injection**, **Diesel injection: Precautions for repair**, page **13B-12**) .
- Prepare the new regulator:
  - remove the protective cap,
  - check seal positions,
  - lubricate the O-rings with clean diesel fuel.

> Note:
>
> Lubrication is very important to avoid external leakage.

- Offer up the regulator, rotating it slightly.
- Push the regulator gently in until it engages fully.
- Pretighten the new regulator bolts **(3 N.m)**.
- Torque tighten the **regulator bolts (6 N.m)** using a **torque wrench**.
- Clean the area with fresh wipes.
- Fit the fuel pressure regulator connector.
- Connect the battery, starting with the positive terminal.

> **WARNING**
>
> Carry out the necessary programming (see **Battery : Removal - Refitting**) (80A, Battery).

- Torque tighten the **battery cover mounting bolts (4 N.m)**.
- Switch on the ignition.
- Clear the fault indicated on the **diagnostic tool** if necessary.

> **WARNING**
>
> Check that there are no diesel leaks:
>
> - run the engine at idle speed,
> - accelerate several times at no load,
> - switch off the ignition,
> - check that there is no diesel fuel escaping.

B84 or C84 or E84 or K84 or L84, and M9R

Tightening torques ▽	
fuel pressure regulator bolts	**6 Nm**

IMPORTANT

Consult the safety and cleanliness advice and operation recommendations before carrying out any repair (see **13B**, **Diesel injection**, **Diesel injection: Precautions for repair**, page **13B-12**) .

WARNING

Once the warranty period for the high pressure pump has expired, only the pressure regulator can be replaced separately.

Whilst the warranty period for the high pressure pump is still valid, the high pressure pump should be replaced as a whole if the pressure regulator displays a fault.

REMOVAL

I - REMOVAL PREPARATION OPERATION

❑ Disconnect:

- the battery (see **Battery: Removal - Refitting**) (MR 364, 80A, Battery),
- the air flowmeter connector.

❑ Remove:

- the engine cover,
- the clips on the air filter box air outlet pipe.

❑ Unclip the turbocharging pressure regulator control pipe on the air filter box outlet air pipe,

❑ Disconnect the oil vapour rebreathing pipe.

❑ Remove the air filter box air outlet pipe.

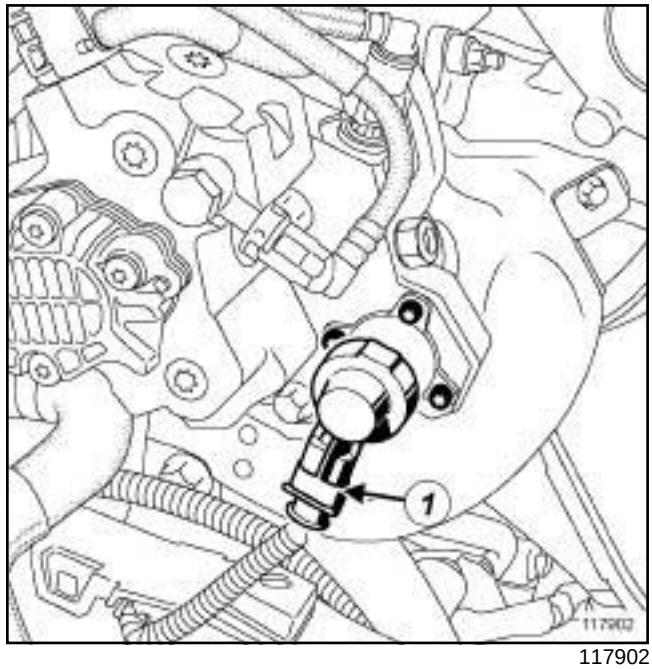

117902

❑ Disconnect the fuel pressure regulator connector (**1**) .

II - OPERATION FOR REMOVAL OF PART CONCERNED

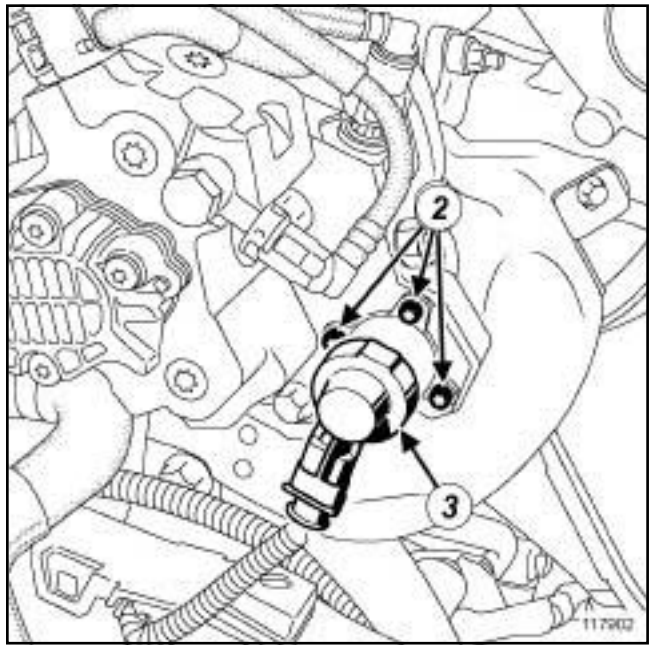

117902

❑

WARNING

Prepare for the flow of fluid, and protect the surrounding components.

B84 or C84 or E84 or K84 or L84, and M9R

❏ Remove:

- the bolts (**2**) from the fuel pressure regulator,
- fuel pressure regulator (**3**) .

❏ Fit a blanking plug.

REFITTING

I - REFITTING PREPARATIONS OPERATION

❏ It is essential to replace the fuel pressure regulator sensor.

❏ Clean the contact surface of the fuel pressure regulator on the high pressure pump.

❏ Wipe the bearing face of the fuel pressure regulator on the high pressure pump using new wipes (see **13B**, **Diesel injection**, **Diesel injection: Precautions for repair**, page **13B-12**) .

❏ Prepare the new regulator:

- remove the protective plug,
- check the position of the seals,
- lubricate the O-rings with clean diesel fuel.

> Note:
>
> Lubrication is very important to avoid external leaks.

❏ Remove the protective plug from the opening in the high pressure pump.

❏ Rinse the fuel pressure regulator housing by running the manual priming pump located next to the fuel filter.

II - REFITTING OPERATION FOR PART CONCERNED

❏ Fit the new fuel pressure regulator by gently rotating it clockwise and gently pushing it until it is completely in.

❏ Refit the fuel pressure regulator bolts.

❏ Torque tighten the **fuel pressure regulator bolts (6 Nm)**.

III - FINAL OPERATION.

❏ Connect the fuel pressure regulator connector.

❏ Refit the air filter box air outlet pipe.

❏ Connect the oil vapour rebreathing pipe.

❏ Clip the turbocharging pressure regulator control pipe on the air filter box outlet air pipe.

❏ Refit:

- the clips on the air filter box air outlet pipe,
- the engine cover.

❏ Connect:

- the air flowmeter connector,
- the battery (see **Battery : Removal - Refitting**) (MR 364, 80A, Battery).

B84 or C84 or G84 or S84, and K9K, and 722

Essential equipment
diagnostic tool
torque wrench

Tightening torques ▽	
Venturi mounting bolt	**5.5 Nm**
battery cover mounting bolts	**4 Nm**

IMPORTANT

Before carrying out any work on the injection system, check using the CLIP **diagnostic tool** :

• that the injector rail is not under pressure,

• that the fuel temperature is not too high.

- It is essential to respect the safety and cleanliness advice whenever work is carried out on this system.

- Loosening a high pressure pipe union when the engine is running is strictly prohibited.

WARNING

- Obtain a set of special high-pressure injection circuit plugs.

- Always replace any high pressure pipe and high pressure pipe clips that have been removed.

REMOVAL

❑ Remove the engine covers.

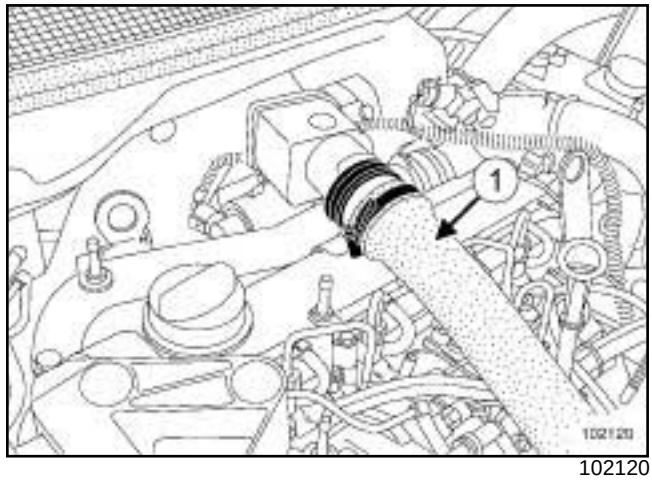

102120

❑ Disconnect:

- the battery (see **Battery : Removal - Refitting**) (MR 364, 80A, Battery),

- the intake duct (**1**) .

❑ Clean the unions (see **13B**, **Diesel injection**, **Diesel injection: Precautions for repair**, page **13B-12**) .

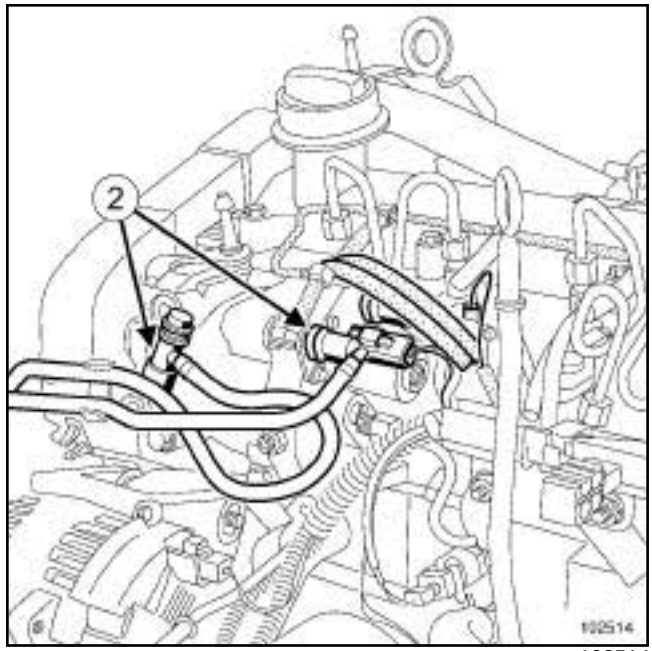

102514

❑ Disconnect the fuel supply and return pipes (**2**) .

B84 or C84 or G84 or S84, and K9K, and 722

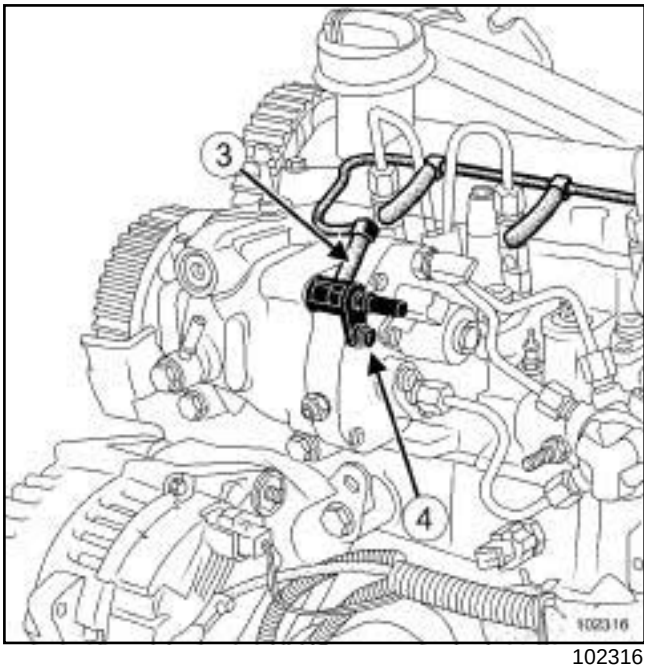

102316

❑ Disconnect the return pipe (**3**) connecting the injector to the pump.

❑ Remove:

- the mounting bolt (**4**) from the Venturi,
- the venturi.

REFITTING

❑

> **WARNING**
> Do not remove the blanking plugs from each component until the last moment.

❑ Lubricate the O-ring with lubricant from the applicator supplied with the new part.

❑ Do not damage the O-ring when fitting the venturi.

❑ Fit the Venturi.

❑ Torque tighten the **Venturi mounting bolt (5.5 Nm)** using the **torque wrench**.

❑ Reconnect the various pipes.

❑ Connect the battery (see **Battery : Removal - Refitting**) (MR 364, 80A, Battery).

❑ Torque tighten the **battery cover mounting bolts (4 Nm)**.

❑ Check the sealing after repair work (see **13B**, **Diesel injection**, **High pressure pipe: Checking**, page **13B-157**) .

> **WARNING**
>
> Check that there are no diesel leaks:
>
> - let the engine run at idle speed until the engine cooling fan starts to operate,
> - accelerate several times at no load,
> - switch off the ignition,
> - check that there is no diesel fuel escaping.

B84 or C84 or G84 or S84, and K9K, and 728 or 729

Essential equipment
diagnostic tool
torque wrench

Tightening torques ▽	
Venturi mounting bolt	**5.5 Nm**
battery cover mounting bolts	**4 Nm**

IMPORTANT

Before carrying out any work on the injection system, check using the CLIP **diagnostic tool** :

• that the injector rail is not under pressure,

• that the fuel temperature is not too high.

- It is essential to respect the safety and cleanliness advice whenever work is carried out on this system.
- Loosening a high pressure pipe union when the engine is running is strictly prohibited.

WARNING

- Obtain a set of special high-pressure injection circuit plugs.
- Always replace any high pressure pipe and high pressure pipe clips that have been removed.

REMOVAL

❑ Remove the engine covers.

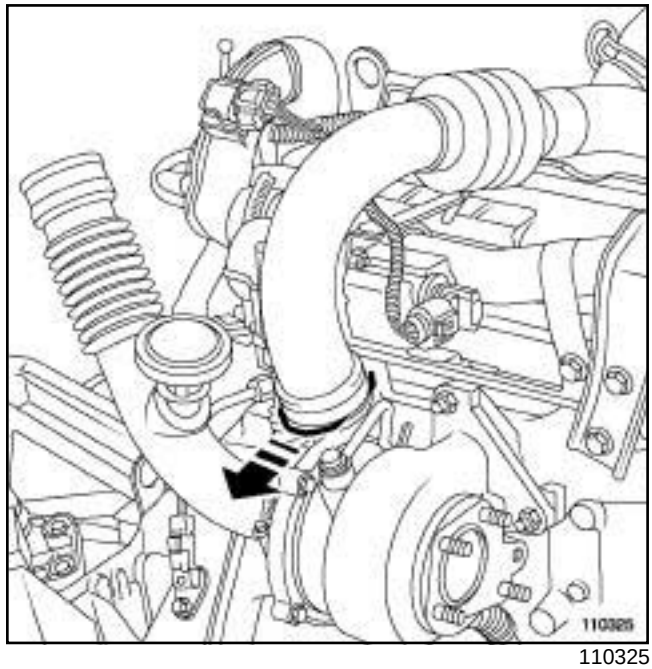

110325

❑ Pull the clip.

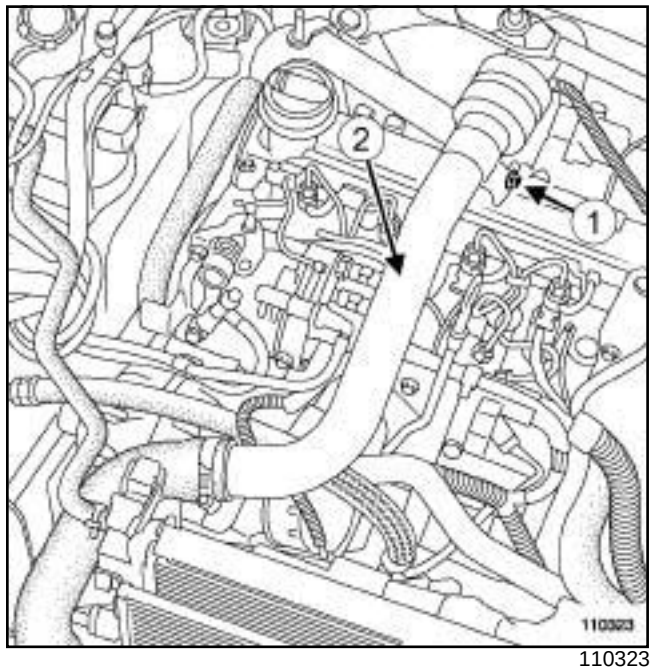

110323

❑ Undo the bolt (**1**) .

❑ Remove the air duct (**2**) .

❑ Clean the unions (see **13B**, **Diesel injection**, **Diesel injection: Precautions for repair**, page **13B-12**) .

B84 or C84 or G84 or S84, and K9K, and 728 or 729

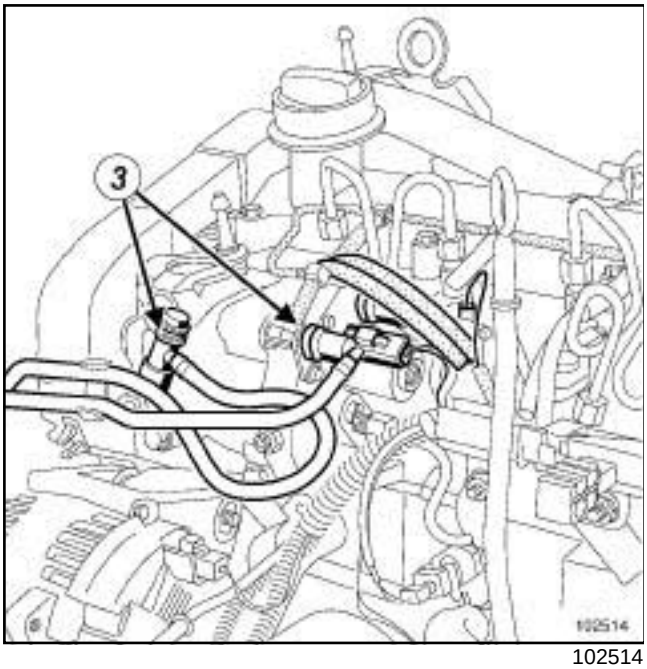

102514

❑ Disconnect the fuel supply and return pipes (**3**) .

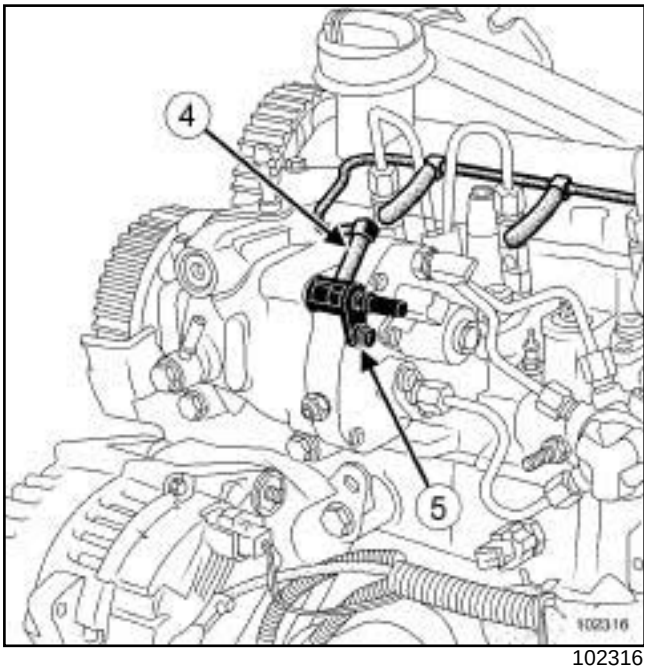

102316

❑ Disconnect the return pipe (**4**) connecting the injector to the pump.

❑ Remove:

- the mounting bolt (**5**) from the Venturi,
- the venturi.

REFITTING

❑

> **WARNING**
> Do not remove the blanking plugs from each component until the last moment.

❑ Lubricate the O-ring with lubricant from the applicator supplied with the new part.

❑ Do not damage the O-ring when fitting the venturi.

❑ Fit the Venturi.

❑ Torque tighten the **Venturi mounting bolt (5.5 Nm)** using the **torque wrench**.

❑ Reconnect the various pipes.

❑ Connect the battery (see **Battery : Removal - Refitting**) (MR 364, 80A, Battery).

❑ Torque tighten the **battery cover mounting bolts (4 Nm)**

❑ Check the sealing after repair work (see **13B**, **Diesel injection**, **High pressure pipe: Checking**, page **13B-157**) .

> **WARNING**
>
> Check that there are no diesel leaks:
>
> - let the engine run at idle speed until the engine cooling fan starts to operate,
> - accelerate several times at no load,
> - switch off the ignition,
> - check that there is no diesel fuel escaping.

B84 or C84 or G84 or S84, and K9K, and 724

Tightening torques ▽	
Venturi bolt	**5.5 N.m**

IMPORTANT

To avoid all risk of damage to the systems, apply the safety and cleanliness instructions and operation recommendations before carrying out any repair (see **13B**, **Diesel injection**, **Diesel injection: Precautions for repair**, page **13B-12**) .

WARNING

To avoid any corrosion or damage, protect the areas on which fuel is likely to run.

WARNING

Keep the pipe unions away from contaminated areas.

Note:

Ensure that you have a new Venturi before opening up the fuel circuit.

REMOVAL

I - REMOVAL PREPARATION OPERATION

❑ Remove the front engine cover.

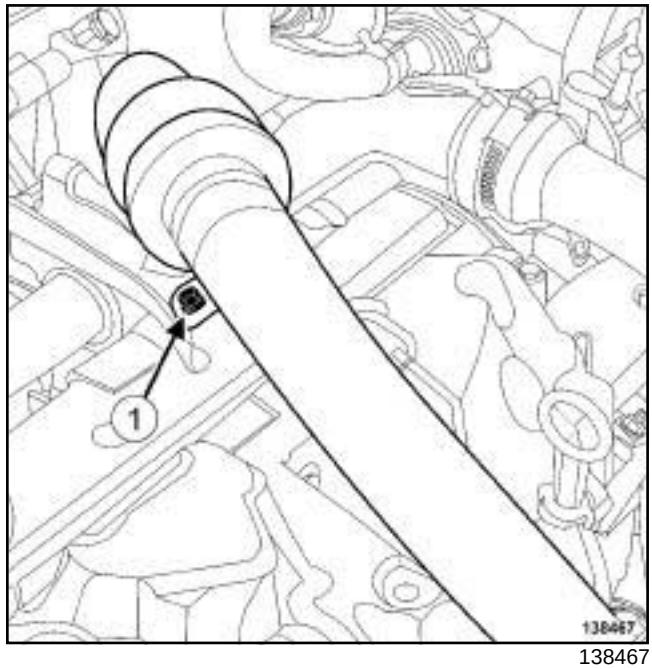

138467

❑ Remove the bolt (**1**) on the intercooler air inlet pipe.

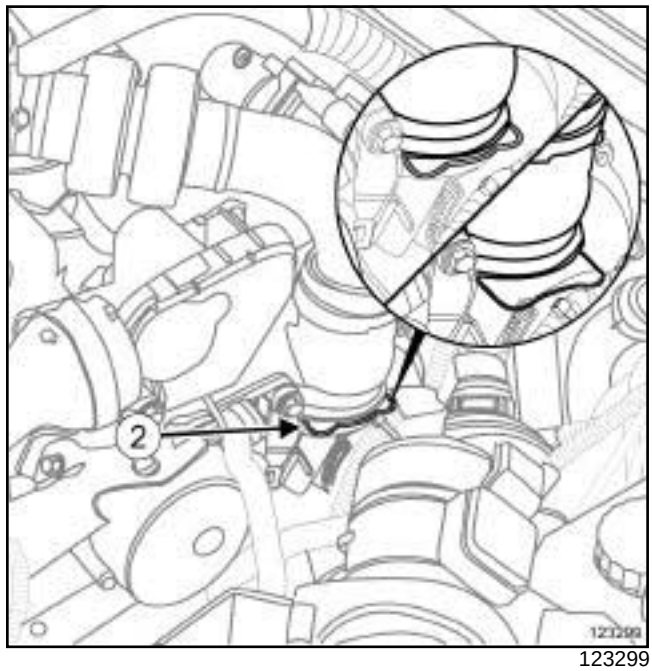

123299

❑ Pull the clip (**2**) from the intercooler inlet air pipe.

❑ Disconnect the intercooler air inlet pipe from the turbocharger.

❑ Move aside the intercooler air inlet pipe.

B84 or C84 or G84 or S84, and K9K, and 724

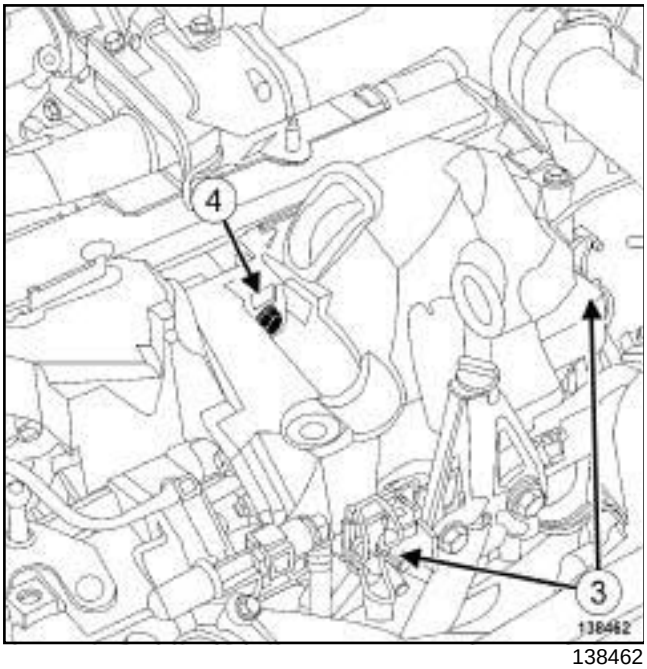

138462

❑ Unclip the injector rail protector cover at (**3**) .

❑ Remove:

- the injector rail protector cover bolt (**4**) ,
- the injector rail protector cover,

II - OPERATION FOR REMOVAL OF PART CONCERNED

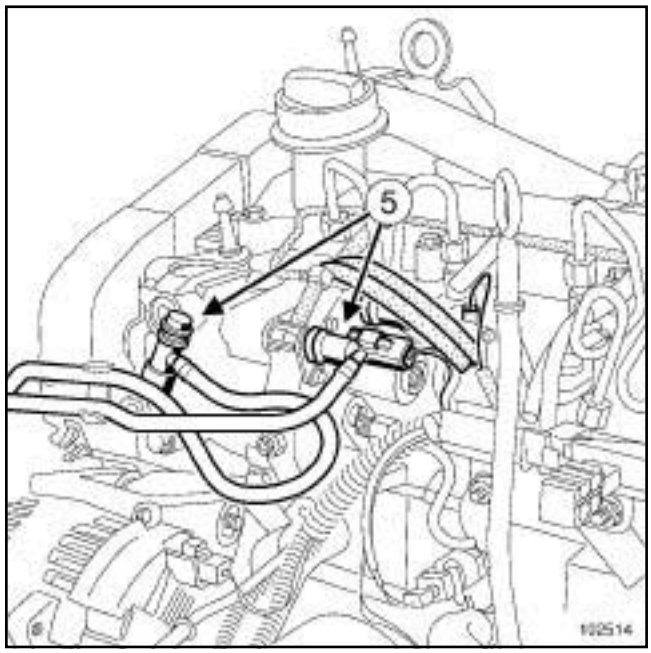

102514

❑

WARNING
To avoid any corrosion or damage, protect the areas on which fuel is likely to run.

❑ Disconnect the fuel supply and return pipes (**5**) .

WARNING
Keep the pipe unions away from contaminated areas.

❑ Fit blanking plugs to the fuel supply and return pipes.

B84 or C84 or G84 or S84, and K9K, and 724

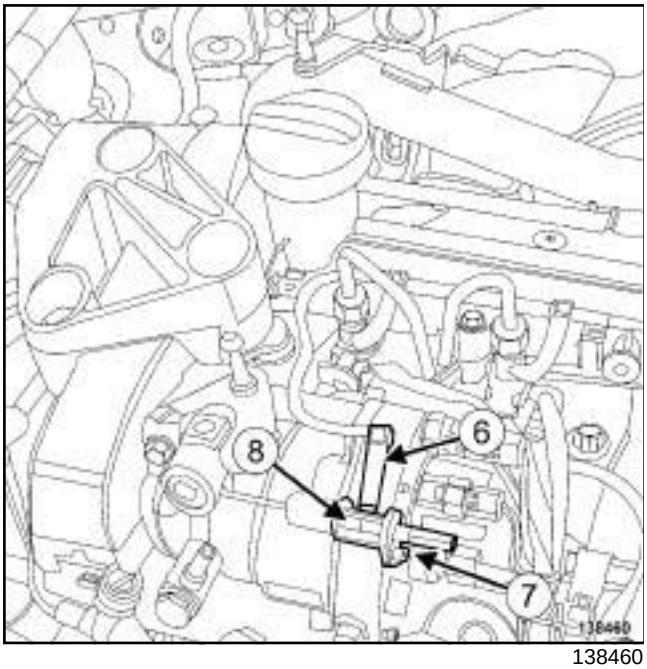

138460

- ❑ Disconnect the fuel return pipe (**6**) from the high pressure pump.
- ❑ Fit blanking plugs to the high pressure pump fuel return pipe.
- ❑ Remove:
  - the Venturi bolt (**7**) ,
  - the Venturi (**8**) .
- ❑ Take care to ensure that no impurities get into the high pressure pump once the Venturi is removed.

> **WARNING**
> Do not blast with compressed air once the fuel circuit is open, otherwise impurities may enter the system. Only use cleaning cloths.

REFITTING

I - REFITTING PREPARATION OPERATION

❑

> **WARNING**
> Do not remove the blanking plugs from each component until the last moment.
>
> Also, do not remove the components from their packaging until they are to be fitted to the vehicle.

II - REFITTING OPERATION FOR PART CONCERNED

- ❑ Refit the venturi to the high pressure pump.
- ❑ Torque tighten the **Venturi bolt (5.5 N.m)**.

> Note:
>
> Do not lubricate the seals with grease or used diesel fuel. Use the applicator provided in the kit for the new part.

- ❑ Remove the blanking plugs from the fuel supply and return pipes.
- ❑ Connect the fuel supply and return pipes on the high pressure pump.

III - FINAL OPERATION

- ❑ Prime the fuel circuit using a manual priming pump until the pipes are filled with fuel.
- ❑ Refit:
  - the injector rail protector cover,
  - the injector rail protector bolt.
- ❑ Connect the intercooler air inlet pipe on the turbocharger.
- ❑ Fit the clip of the intercooler air inlet pipe on the turbocharger.
- ❑ Refit the bolt on the intercooler air inlet pipe.
- ❑ Start the engine.
- ❑ Check that there are no fuel leaks.
- ❑ Refit the engine cover.

Diesel return pipe: Removal - Refitting

B84 or C84 or E84 or K84 or L84, and M9R

Essential equipment
diagnostic tool

IMPORTANT

Before carrying out any work on the injection system, check using the **diagnostic tool** :

- that the rail is not under pressure,

- that the fuel temperature is not too high.

It is essential to respect the safety and cleanliness advice whenever work is carried out on this system.

Working on the circuit with the engine running is strictly forbidden.

WARNING

Always replace any high pressure pipe or high pressure pipe clip removed with a new one.

IMPORTANT

Consult the safety and cleanliness advice and operation recommendations before carrying out any repair (see **13B**, **Diesel injection**, **Diesel injection: Precautions for repair**, page **13B-12**) .

REMOVAL

I - REMOVAL PREPARATION OPERATION

❏ Disconnect the battery (see **Battery: Removal - Refitting**) (MR 364, 80A, Battery).

❏ Remove:

- the engine cover,

- the injector rail protector (see **13B**, **Diesel injection**, **Injector rail protector: Removal - Refitting**, page **13B-154**) .

II - OPERATION FOR REMOVAL OF PART CONCERNED

❏ Detach the diesel return pipe.

B84 or C84 or E84 or K84 or L84, and M9R

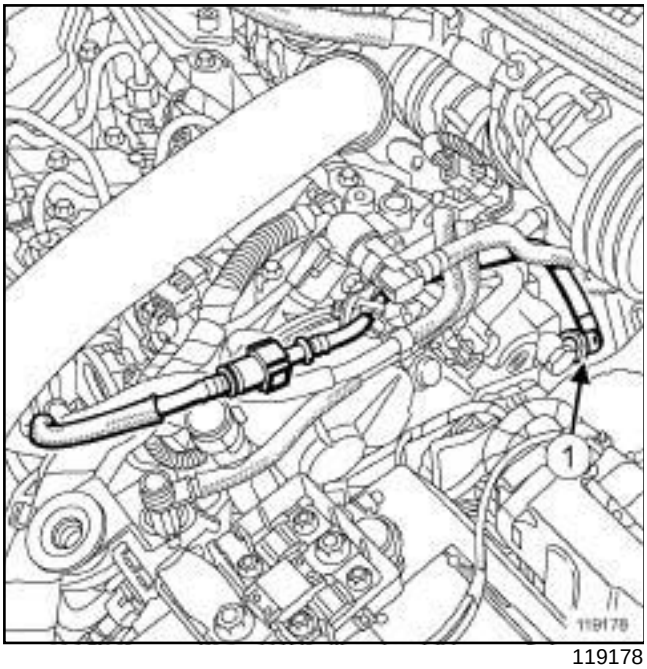

119178

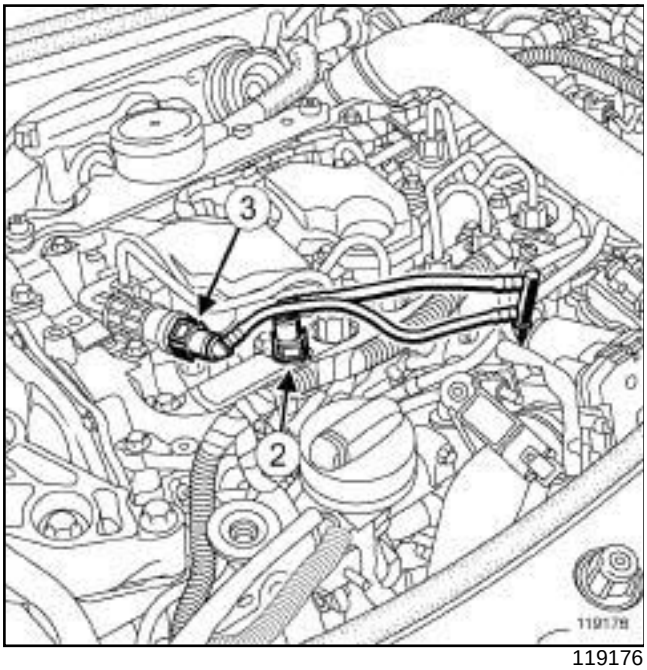

119176

❑ Disconnect the diesel return pipe from:

- the high pressure pump (**1**) ,
- the high pressure rail (**2**) ,
- the fuel return rail outlet at (**3**) ,
- the diesel fuel filter.

IMPORTANT

During this operation, be sure to:

- refrain from smoking or bringing red hot objects close to the working area,
- beware of fuel splashes when disconnecting the union,
- protect sensitive areas from fuel outflow.

❑ Fit anti-contamination caps.

❑ Remove the diesel return pipe.

Note:

During this operation, it is necessary to mark the routing of the diesel return pipe before removing it.

REFITTING

I - REFITTING OPERATION FOR PART CONCERNED

❑ Refit the diesel return pipe.

Note:

During this operation it is essential to correctly position the fuel return pipe.

❑ Remove the blanking plugs.

❑ Connect the diesel return pipe to:

- to the high pressure pump,
- to the high pressure rail,
- to the fuel return rail outlet,
- to the diesel filter.

❑ Clip on the fuel pipe.

II - FINAL OPERATION.

❑ Refit:

- the injector rail protector (see **13B**, **Diesel injection**, **Injector rail protector: Removal - Refitting**, page **13B-154**) ,
- the engine cover.

B84 or C84 or E84 or K84 or L84, and M9R

❑ Connect the battery (see **Battery : Removal - Refitting**) (MR 364, 80A, Battery).

WARNING

Check that there are no leaks:

- let the engine run at idle speed until the engine cooling fan starts to operate,
- accelerate several times at no load,
- carry out a road test,
- switch off the ignition,
- confirm that there is no diesel leak.

K9K, and 732 or 734

IMPORTANT
Consult the safety and cleanliness advice and operation recommendations before carrying out any repair (see **13B**, **Diesel injection**, **Diesel injection: Precautions for repair**, page **13B-12**) .

IMPORTANT
Wear latex gloves during the operation.

WARNING
To avoid any corrosion or damage, protect the areas on which fuel is likely to run.

REMOVAL

I - REMOVAL PREPARATION OPERATION

❑ Remove:

- the engine cover,
- the dipstick.

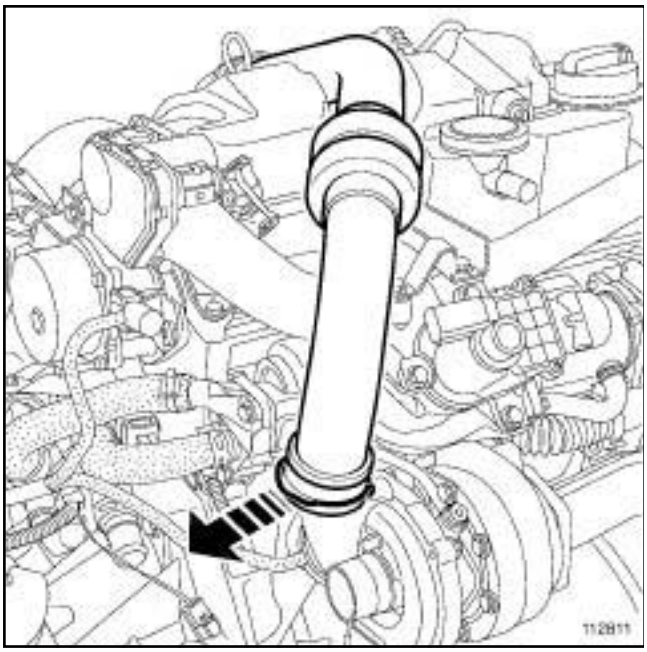

112811

❑ Pull the turbocharger air outlet pipe clip.

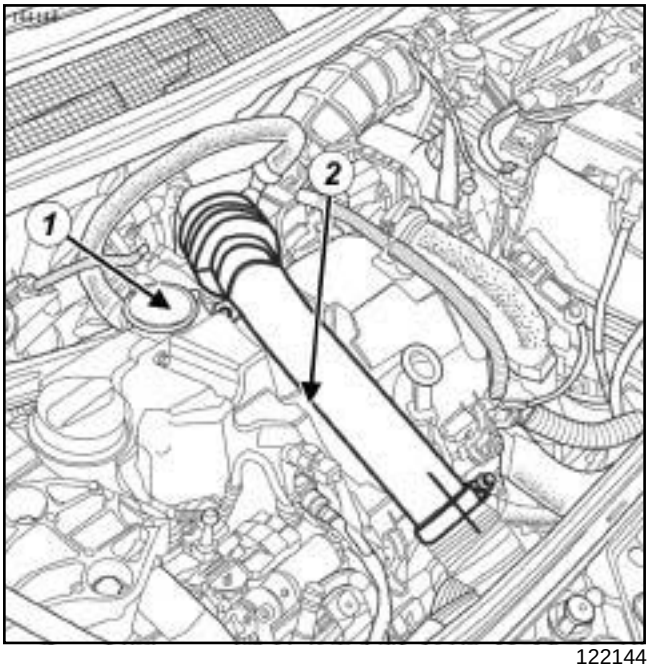

122144

❑ Remove the bolt (**1**) from the turbocharger air outlet pipe.

❑ Move aside the turbocharger air outlet pipe (**2**) .

K9K, and 734

❑ Unpick the camshaft position sensor wiring from the injector rail protector cover.

K9K, and 732 or 734

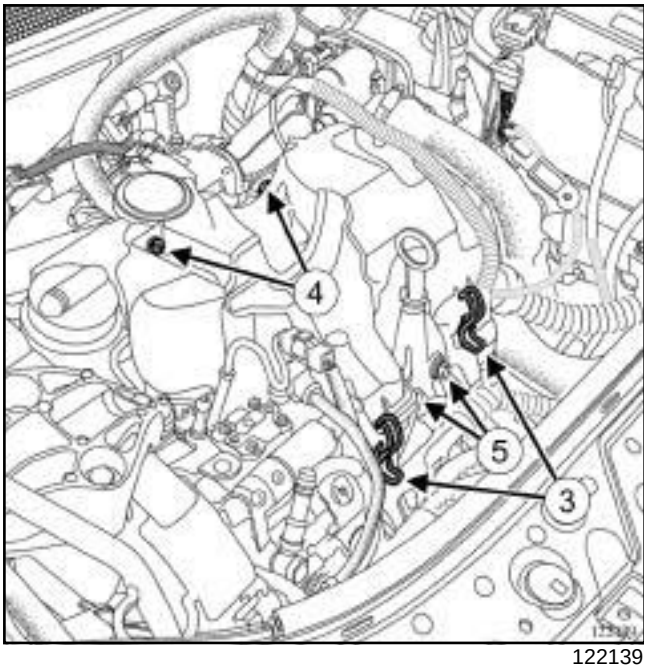

122139

❑ Unclip the injector rail protector cover (**3**) .

❑ Remove:

- the injector rail protector cover bolt and nut (**4**) ,
- the dipstick duct bolts (**5**) ,
- the injector rail protector cover.

II - OPERATION FOR REMOVAL OF PART CONCERNED

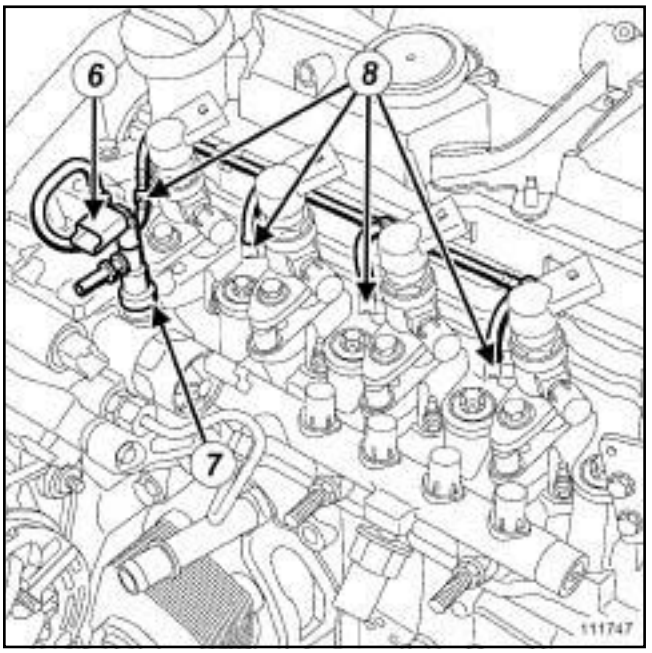

111747

❑ Disconnect the diesel temperature sensor connector (**6**) .

❑ Clean the diesel return union (**7**) on the high pressure pump (see **13B**, **Diesel injection**, **Diesel injection: Precautions for repair**, page **13B-12**) .

❑ Disconnect the diesel return union (**7**) from the high pressure pump.

> Note:
>
> Be prepared for the outflow of diesel.

❑ Fit blanking plugs onto the diesel return pipe and high pressure pump.

❑ Clean the diesel return unions (**8**) on the injectors (see **13B**, **Diesel injection**, **Diesel injection: Precautions for repair**, page **13B-12**) .

K9K, and 732 or 734

First stage in removing the injector diesel return unions

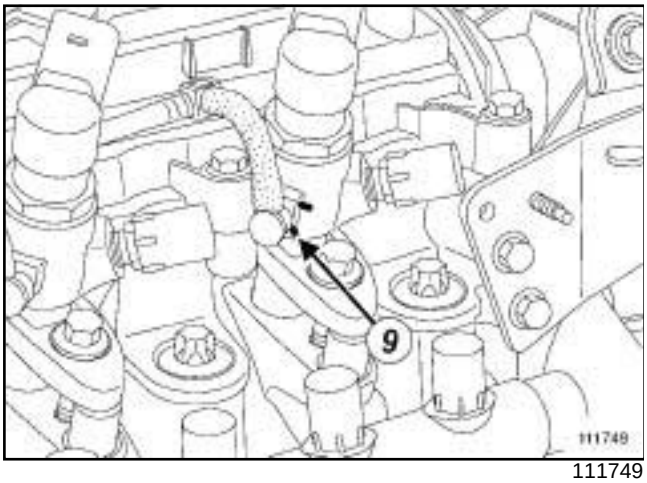

111749

❑ Using a thin flat-blade screwdriver, push the lower tabs (**9**) of the injector diesel return union retaining clips towards the rocker cover in order to unfasten them and fully fit them on the rocker cover.

> **WARNING**
>
> Ensure that the clip is not fully removed from its housing to prevent it from being twisted when touching the rocker cover.
>
> If a clip completely comes out of its housing, remove the injector concerned and replace the clip with a new clip (see **13B**, **Diesel injection**, **Diesel injector: Removal - Refitting**, page **13B-258**) .

Second stage in removing the injector diesel return unions

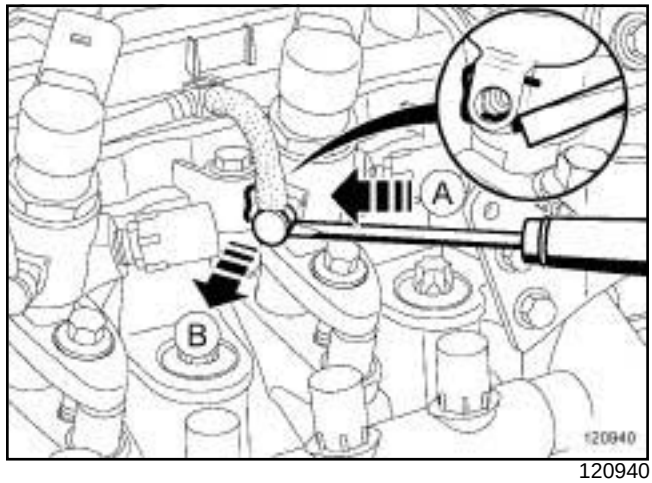

120940

❑ Using a fine flat-blade screwdriver, push down (**A**) on the lower tabs of the retaining clips, first resting them on the rocker cover without separating them fully from their injectors.

❑ Manually remove the injector diesel return unions at (**B**) , while pressing (**A**) on the lower tabs of the retaining clips using a thin, flat-blade screwdriver.

> Note:
>
> With sufficient force applied to the retaining clip while pressing continuously with the screwdriver, the injector diesel return unions will come out effortlessly.

> **WARNING**
>
> Do not use the screwdriver as a lever directly on the injector fuel return unions.

❑ Fit suitable blanking plugs on:

- the diesel return unions on the injectors,
- the diesel return openings on the injectors.

K9K, and 732 or 734

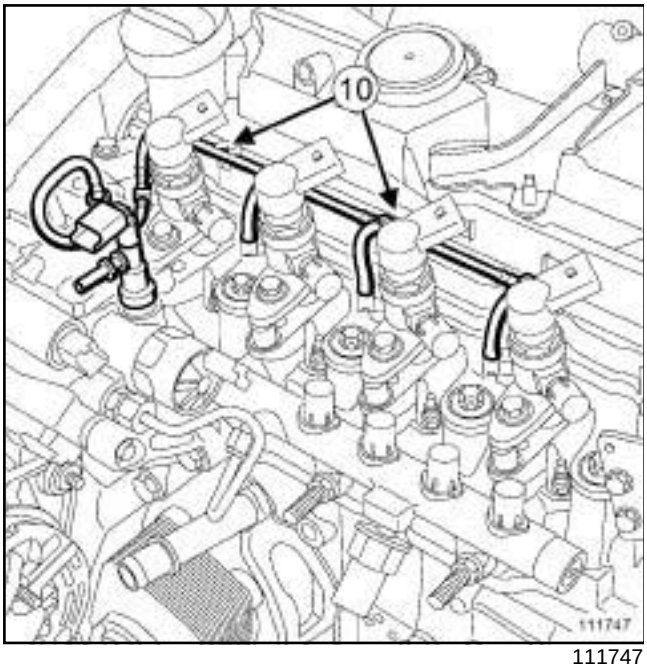

111747

❑ Detach the diesel return pipe from the rocker cover at (**10**) .

❑ Remove the diesel return pipe.

> **WARNING**
> If the diesel return pipe is to be reused, keep it in a sealed bag throughout the removal operation.

REFITTING

I - REFITTING PREPARATION OPERATION

❑

> **WARNING**
> Only remove the blanking plugs from the protected components at the last possible moment.
>
> Also, do not remove the components from their packaging until just before fitting them to the vehicle.

II - REFITTING OPERATION FOR PART CONCERNED

❑

> **WARNING**
> Check the condition of the seals on the diesel return unions on the injectors.
>
> Check that they are not cut, crushed and have not come out of their grooves.
>
> Replace the entire diesel return pipe if one of the components is damaged.

❑ Push the retaining clips for the diesel return unions on the injectors towards the front of the vehicle until they are in their original positions.

❑ Remove the blanking plugs from the injector fuel return openings, and discard.

❑ Remove the diesel return pipe from its packaging.

❑ Lubricate the injector diesel return unions with **SILICONE-FREE LUBRICANT** (see **Vehicle: Parts and ingredients for the repairwork**) (04B, Consumables - Products) so that the seals are completely covered.

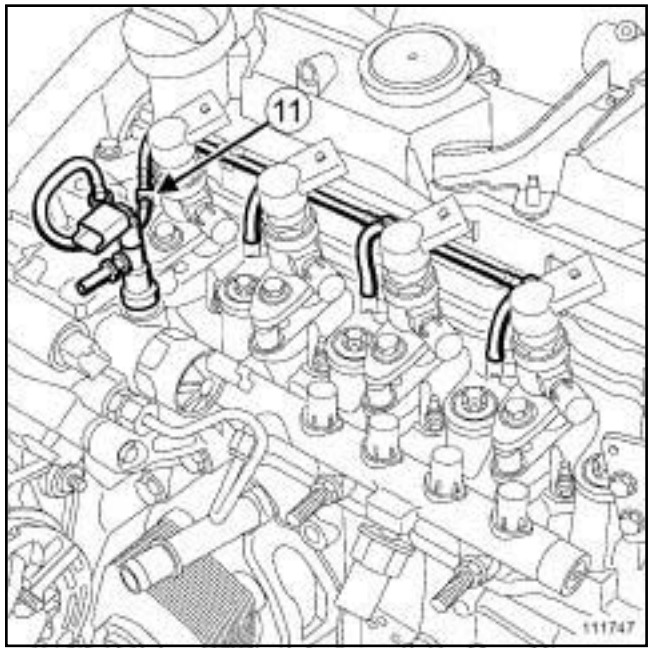

111747

❑ Offer up the diesel return unions to the injector diesel return openings, starting with injector number 4 (**11**) .

K9K, and 732 or 734

- ❑ Clip the injector diesel return unions onto the injectors, starting with injector number 4.

> Note:
>
> Check that the diesel return unions are clipped on properly.

- ❑ Clip the fuel return pipe onto the rocker cover.

III - FINAL OPERATION.

- ❑ Refit the injector rail protector cover.
- ❑ Clip the injector rail protector cover into place.

K9K, and 734

- ❑ Clip the camshaft position sensor wiring on to the injector rail protector cover.

- ❑ Push the turbocharger air outlet pipe clip.
- ❑ Clip the turbocharger air outlet pipe on to the turbocharger.
- ❑ Refit:
  - the dipstick,
  - the engine cover.
- ❑ Check the high pressure circuit (see **13B**, **Diesel injection**, **High pressure pipe: Checking**, page **13B-157**) .

Diesel injector fuel return rail: Removal - Refitting

B84 or C84 or E84 or K84 or L84, and M9R

Essential equipment
diagnostic tool

Tightening torques ▽	
diesel injector fuel return rail bolt on the rocker cover	**10 Nm**

IMPORTANT

Before carrying out any work on the injection system, check using the **diagnostic tool** :

- that the injector rail is not under pressure,

- that the fuel temperature is not too high.

Loosening a high pressure pipe union when the engine is running is strictly prohibited.

WARNING

Always replace any high pressure pipe or high pressure pipe clip removed with a new one.

IMPORTANT

Consult the safety and cleanliness advice and operation recommendations before carrying out any repair (see **13B**, **Diesel injection**, **Diesel injection: Precautions for repair**, page **13B-12**) .

REMOVAL

I - REMOVAL PREPARATION OPERATION

❑ Disconnect the battery (see **Battery: Removal - Refitting**) (MR 364, 80A, Battery).

❑ Remove:

- the engine cover,

- the injector rail protector (see **13B**, **Diesel injection**, **Injector rail protector: Removal - Refitting**, page **13B-154**) ,

- the oil decanter (see **11A**, **Top and front of engine**, **Oil decanter: Removal - Refitting**, page **11A-301**) .

II - OPERATION FOR REMOVAL OF PART CONCERNED

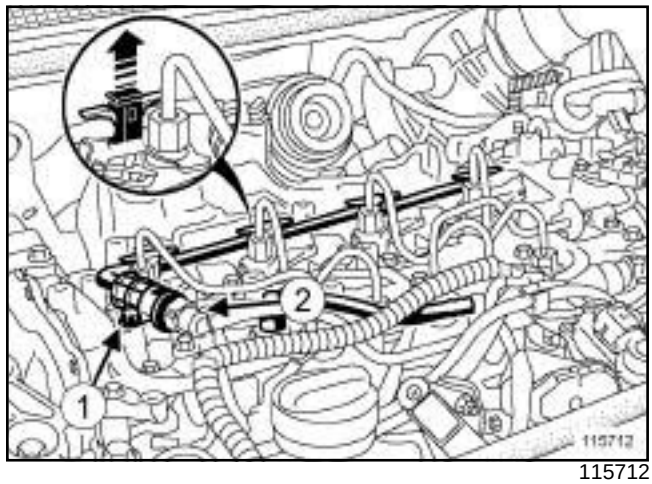

115712

❑ Remove the diesel injector fuel return rail bolt (**1**) from the rocker cover.

❑ Disconnect the quick-release union (**2**) on the injector diesel return rail from the diesel return pipe.

Note:

Do not allow any diesel fuel to enter the engine via the rocker cover opening during this operation.

Fit blanking plugs.

❑ Lift the moving part of the diesel injector fuel return rail on the injectors.

❑ Remove the diesel injector fuel return rail.

Note:

Do not allow any diesel fuel to enter the engine via the rocker cover opening during this operation.

B84 or C84 or E84 or K84 or L84, and M9R

REFITTING

I - REFITTING OPERATION FOR PART CONCERNED

- ❑ Refit the diesel injector fuel return rail.
- ❑ Clip the diesel injector fuel return rail unions onto the injectors.
- ❑ Connect the diesel injector fuel return rail quick-release union on the diesel return pipe.
- ❑ Refit the diesel injector fuel return rail bolt on the rocker cover.
- ❑ Tighten to torque the **diesel injector fuel return rail bolt on the rocker cover (10 Nm)**.

II - FINAL OPERATION.

- ❑ Refit:
  - the oil decanter (see **11A**, **Top and front of engine**, **Oil decanter: Removal - Refitting**, page **11A-301**) ,
  - the injector rail protector (see **13B**, **Diesel injection**, **Injector rail protector: Removal - Refitting**, page **13B-154**) ,
  - the engine cover.
- ❑ Connect the battery (see **Battery : Removal - Refitting**) (MR 364, 80A, Battery).
- ❑ Check that there are no leaks:
  - let the engine run at idle speed until the engine cooling fan starts to operate,
  - accelerate several times at no load,
  - carry out a road test,
  - switch off the ignition,
  - check that there is no diesel fuel escaping.

F9Q, and 803 or 804 or 816 or 818

Essential equipment
diagnostic tool

❑

IMPORTANT

During this operation, be sure to:

- refrain from smoking or bringing red hot objects close to the working area,
- be careful of fuel splashes when disconnecting the union.

IMPORTANT

Consult the safety and cleanliness advice and operation recommendations before carrying out any repair (see **13B**, **Diesel injection**, **Diesel injection: Precautions for repair**, page **13B-12**) .

Note:

Always replace any high pressure pipe or high pressure pipe clip removed with a new one.

IMPORTANT

Before carrying out any work on the injection system, check using the **diagnostic tool** :

- that the rail is not under pressure,
- that the fuel temperature is not too high.

Working on the circuit with the engine running is strictly forbidden.

REMOVAL

I - REMOVAL PREPARATION OPERATION

❑ Disconnect the battery (see **Battery: Removal - Refitting**) (MR 364, 80A, Battery).

❑ Remove the front engine cover.

❑ Unclip the oil vapour rebreather pipe on the oil decanter.

❑ Remove the injector rail protector (see **13B**, **Diesel injection**, **Injector rail protector: Removal - Refitting**, page **13B-154**) .

II - OPERATION FOR REMOVAL OF PART CONCERNED

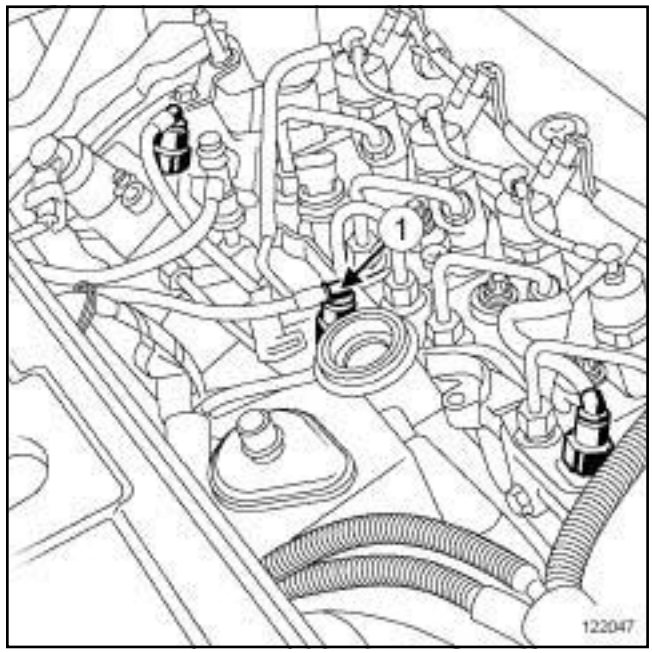

122047

❑

Note:

Do not allow diesel fuel and cleaning agent to enter the engine via the rocker cover opening during this operation.

❑ Unclip the diesel injector fuel return rail union (**1**) from the high pressure pump rear mounting.

F9Q, and 803 or 804 or 816 or 818

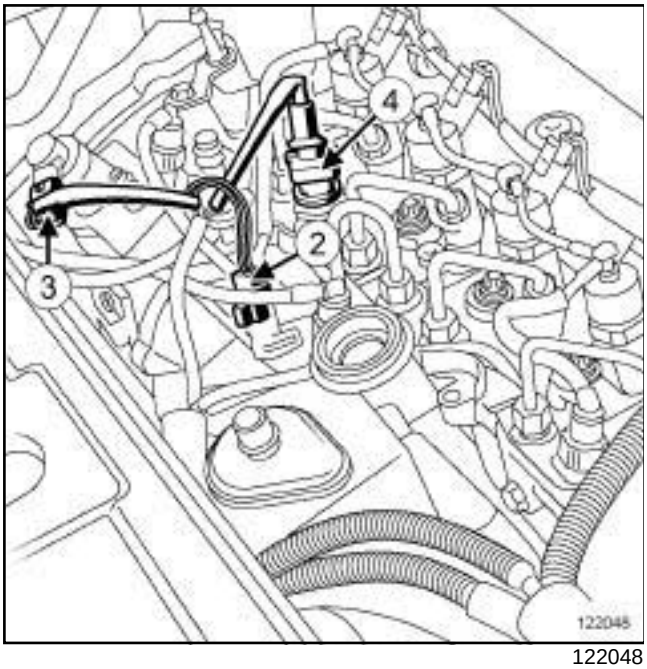

122048

❑ Unclip the diesel temperature sensor connector (**2**) .

❑ Disconnect:

- the high pressure pump flow regulator (**3**) ,
- the pressure sensor (**4**) from the injector rail.

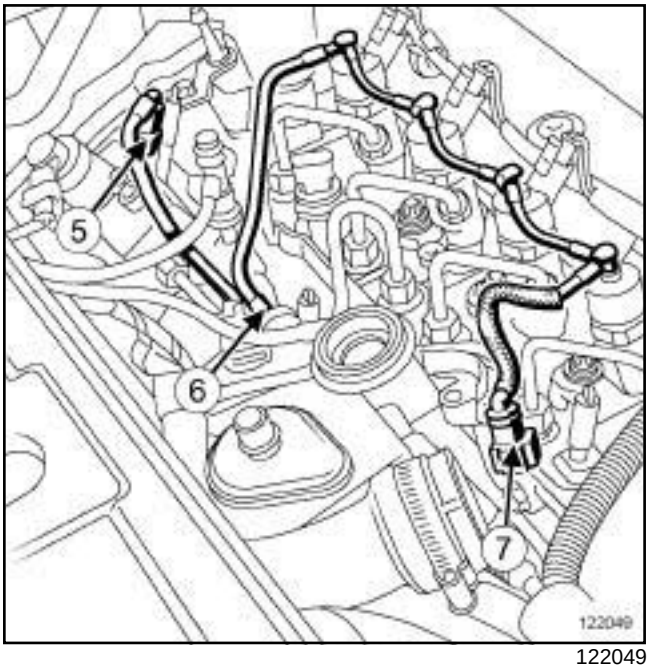

122049

❑ Unclip:

- the diesel return pipe on the high pressure pump (**5**) ,
- the heater plug connectors on the first and second cylinders at the timing end,
- the high pressure pump rear mounting (**6**) ,
- the diesel return pipe from the high pressure rail (**7**) .

❑ Place blanking plugs over the openings.

F9Q, and 803 or 804 or 816 or 818

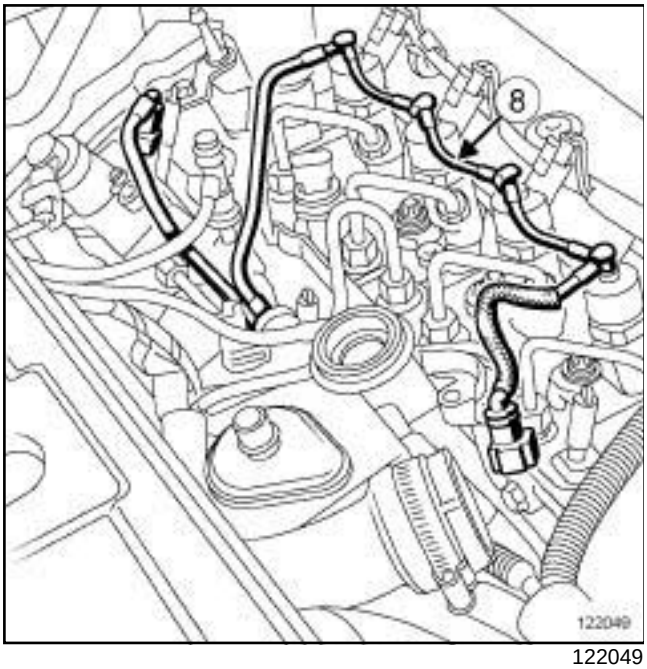

122049

❑

Note:

Do not remove the injector clips.

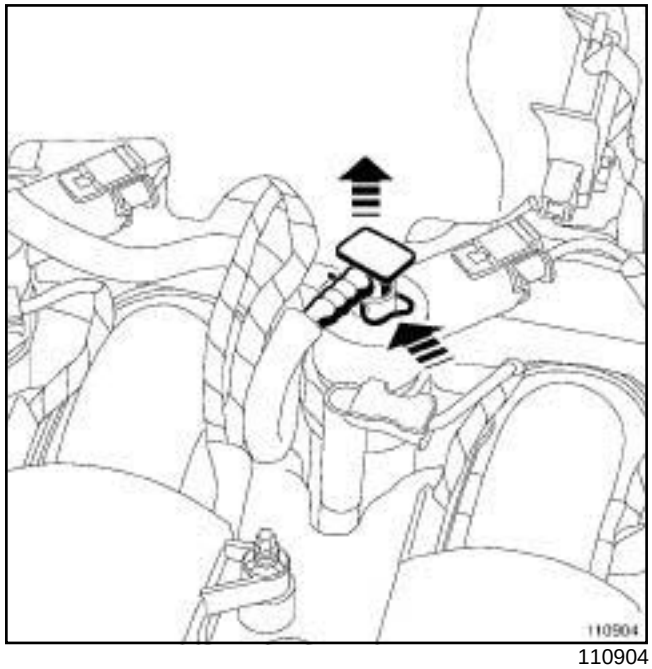

110904

❑ Press the injector clips.

❑ Pull the end piece of the fuel return rail on each diesel fuel injector vertically.

❑ Remove the diesel injector fuel return rail (**8**) .

❑ Plug the openings.

❑ Hermetically pack the diesel injector fuel return rail in a clean plastic bag.

REFITTING

I - REFITTING PREPARATIONS OPERATION

❑

WARNING

Do not remove the blanking plugs from each component until the last moment.

Also, do not remove the components from their packaging until they are to be fitted to the vehicle.

II - REFITTING OPERATION FOR PART CONCERNED

❑ Remove the fuel return rail from the plastic bag or from its packaging.

❑ Remove the blanking plugs.

❑ Refit the fuel return rail.

❑ Press:

- the clips,

F9Q, and 803 or 804 or 816 or 818

- vertically on the diesel fuel injector fuel return rail union to clip it to the injectors.

❏ Clip on:

- the high pressure pump rear support,
- injector rail pressure sensor connector,
- the heater plug connectors on the first and second cylinders at the timing end,
- the diesel return pipe on the high pressure pump.

❏ Clip on the diesel temperature sensor connector.

❏ Clip the diesel fuel injector fuel return rail quick-release union to the high pressure pump rear support.

III - FINAL OPERATION.

❏ Refit:

- the injector rail protector (see **13B**, **Diesel injection**, **Injector rail protector: Removal - Refitting**, page **13B-154**)
- the engine cover.

❏ Clip the oil vapour rebreathing pipe onto the oil decanter.

❏ Connect the battery (see **Battery: Removal - Refitting**) (MR 364, 80A, Battery).

B84 or C84 or G84 or S84, and F9Q, and 800 or 803 or 804 or 808 or 816 or 818

Tightening torques ▽	
injector rail protector bolts	**8 Nm**

F9Q, and 803 or 804 or 816 or 818

- ❑ Disconnect the battery (see **Battery: Removal - Refitting**) (MR 364, 80A, Battery).
- ❑ Remove the air inlet duct (see **12A**, **Fuel mixture**, **Air inlet duct: Removal - Refitting**, page **12A-46**) .

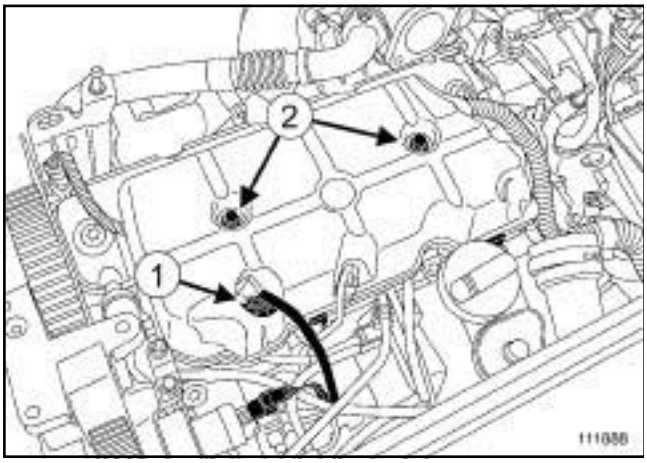

111888

- ❑ Disconnect the rail pressure sensor connector (**1**) .
- ❑ Remove:
  - the injector rail protector bolts (**2**) ,
  - the injector rail protector.

REFITTING

- ❑ Refit the injector rail protector.
- ❑ Torque tighten the **injector rail protector bolts (8 Nm)**.
- ❑ Connect the rail pressure sensor connector.

F9Q, and 803 or 804 or 816 or 818

- ❑ Refit the air inlet duct (see **12A**, **Fuel mixture**, **Air inlet duct: Removal - Refitting**, page **12A-46**) .
- ❑ Connect the battery (see **Battery: Removal - Refitting**) (MR 364, 80A, Battery).

B84 or C84 or E84 or K84 or L84, and M9R

Essential equipment
tweezers

Tightening torques ▽	
injector rail protector bolts	**8 Nm**
intercooler air inlet pipe bolts on the intake distributor	**8 Nm**

REMOVAL

I - REMOVAL PREPARATION OPERATION

❑ Disconnect the battery (see **Battery: Removal - Refitting**) (MR 364, 80A, Battery).

❑ Remove the front engine cover.

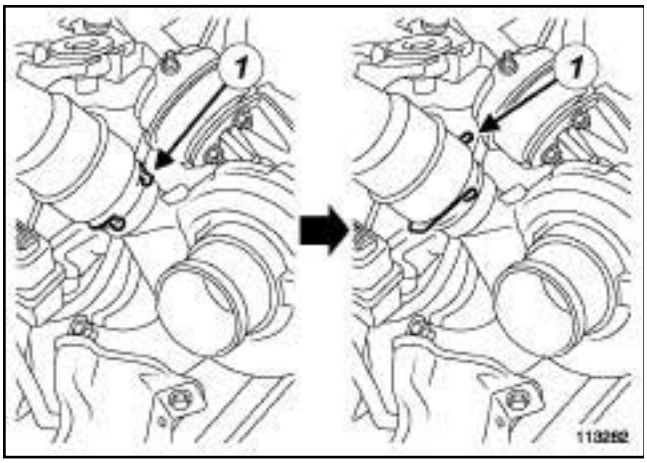

113282

❑ Pivot the intercooler air inlet pipe clip (**1**) on the turbocharger.

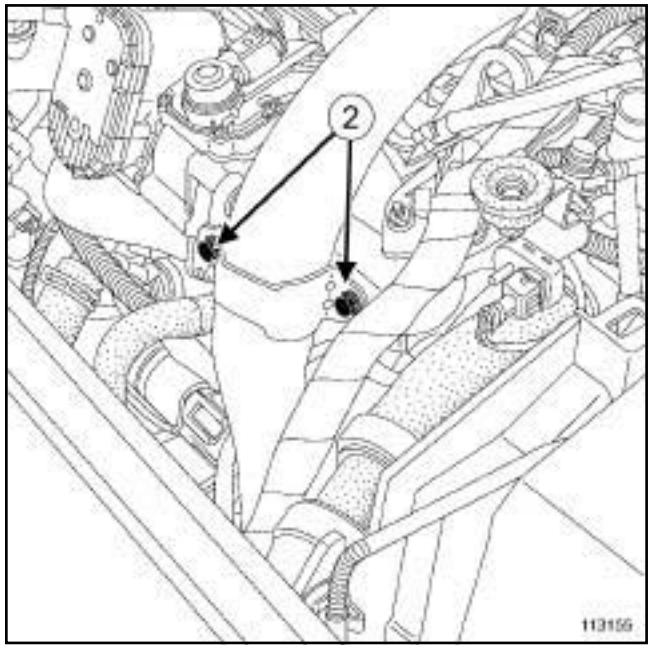

113155

❑ Remove the bolts (**2**) from the intercooler inlet air pipe on the intake distributor.

❑ Move the intercooler inlet air pipe to one side.

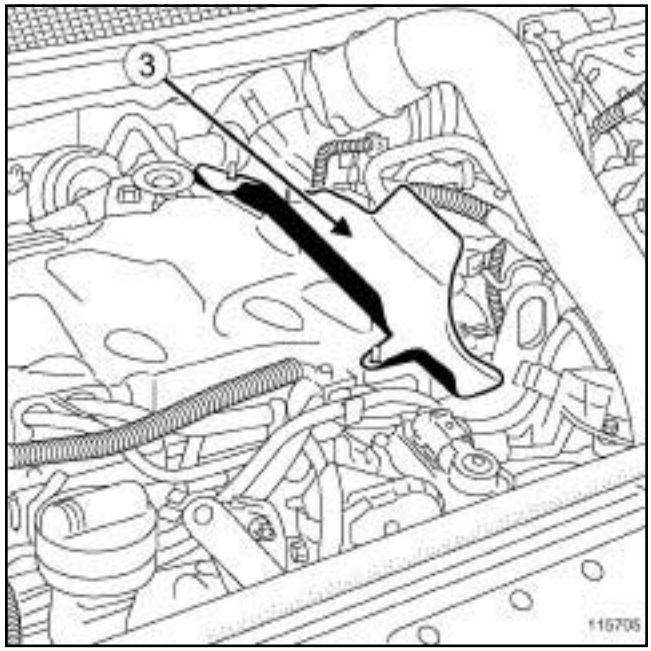

115705

❑ Remove the protective plate (**3**) from the injector rail protector.

B84 or C84 or E84 or K84 or L84, and M9R

II - OPERATION FOR REMOVAL OF PART CONCERNED

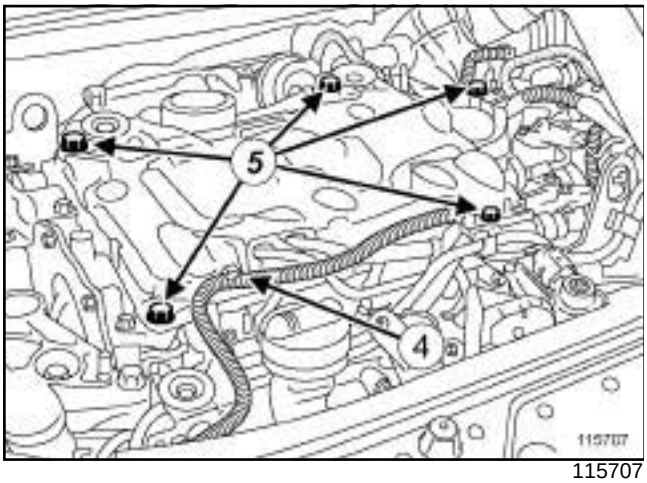

115707

❑ Unpick the wiring harness (**4**) from the heater plugs and the diesel filter.

❑ Remove:

- the bolts (**5**) from the injector rail protector,
- the injector rail protector.

REFITTING

I - REFITTING PREPARATIONS OPERATION

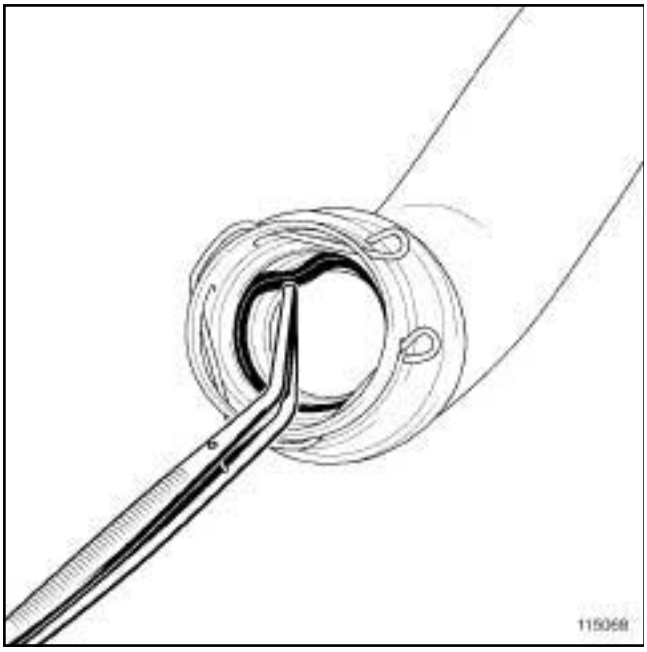

115068

❑ Remove the intercooler inlet air pipe seal at the turbocharger outlet using a **tweezers**.

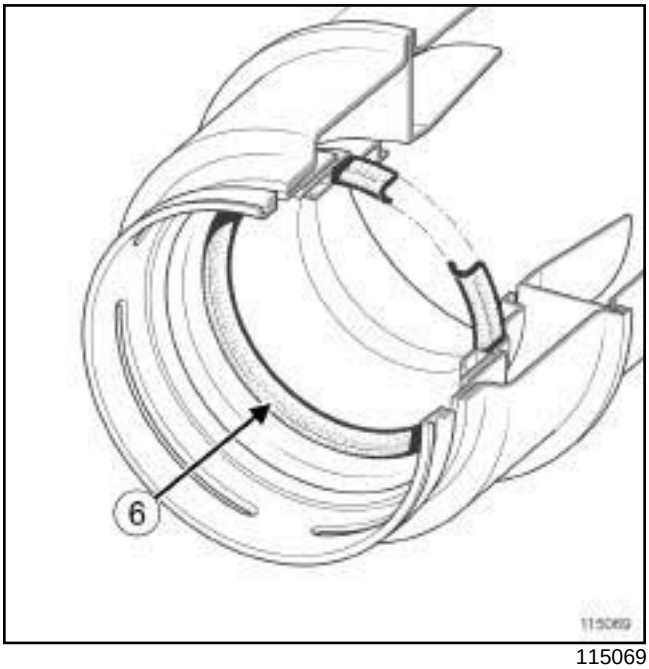

115069

❑ Refit the new intercooler air inlet pipe seal.

> Note:
>
> Check that the seal (**6**) on the turbocharger air inlet duct is fitted the correct way round.

II - REFITTING OPERATION FOR PART CONCERNED

❑ Refit the injector rail protector.

❑ Torque tighten the **injector rail protector bolts (8 Nm)**.

III - FINAL OPERATION.

❑ Clip the wiring harness onto the heater plugs and the diesel filter.

❑ Refit the protective plate on the injector rail protector.

❑ Rotate the intercooler air inlet pipe to refit the clip in its recess.

❑ Clip the intercooler air inlet pipe to the turbocharger.

❑ Refit the bolts for the intercooler inlet air pipe on the intake distributor.

❑ Torque tighten the **intercooler air inlet pipe bolts on the intake distributor (8 Nm)**.

❑ Refit the engine cover.

❑ Connect the battery (see **Battery : Removal - Refitting**) (MR 364, 80A, Battery).

High pressure pipe: Checking

B84 or C84 or G84 or S84, and K9K, and 722 or 724 or 728 or 729

Essential equipment
diagnostic tool

WARNING
After any operation, check that there are is no diesel fuel leakage.

- ❑ Reprime the diesel circuit with the manual priming pump.
- ❑ Remove the engine covers.

Note:

The **diagnostic tool** can be used for testing the high pressure circuit with the engine running.

This command can be used to run fault finding on a leak due to an incorrectly fitted or tightened union. This command only works if the engine coolant temperature is above **60°C**. The fault finding procedure will not reveal small leaks due to incorrect tightening.

- ❑ Run command **AC029 « test d'étanchéité circuit haute pression »** , in the « LPG/fuel circuit tab » .

WARNING
Do not leave anything on the side of the engine housing during the test phase (significant vibration).

Note:

The engine automatically runs a cycle of four accelerations and decelerations to lower the rail pressure.

- ❑ Check that there are no leaks in the high pressure circuit.
- ❑ Deal with the causes of any leaks.
- ❑ Refit the engine covers.

B84 or C84 or G84 or S84, and K9K, and 732 or 734

Essential equipment
diagnostic tool

WARNING
After any operation, check that there are no diesel fuel leaks.

❏ Reprime the diesel circuit using the manual priming pump.

❏ Remove the engine covers.

❏ Disconnect the battery (see **Battery: Removal - Refitting**) (MR 364, 80A, Battery).

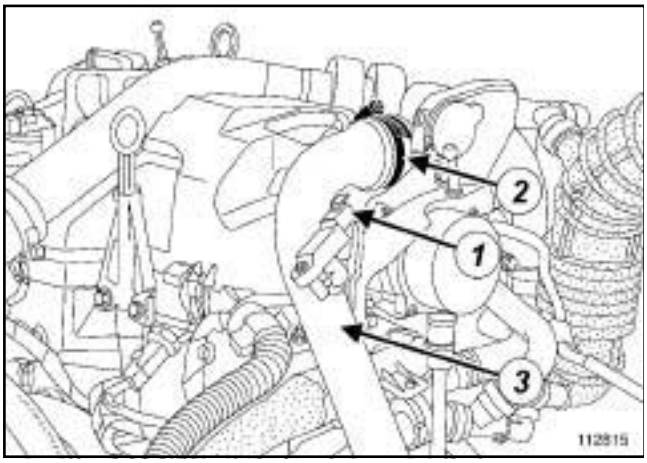

112815

❏ Disconnect the connector (**1**) from the inlet air pressure sensor.

❏ Loosen the clip (**2**) and move the air inlet manifold to one side (**3**) .

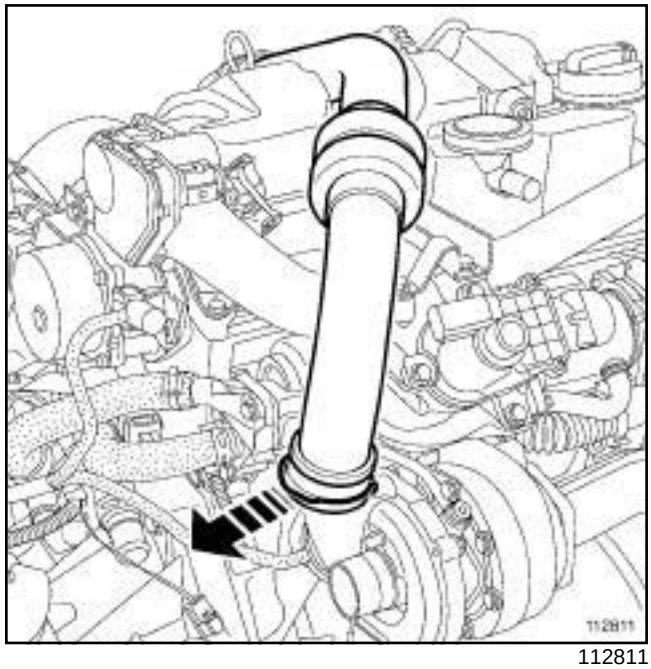

112811

❏ Pull the clip.

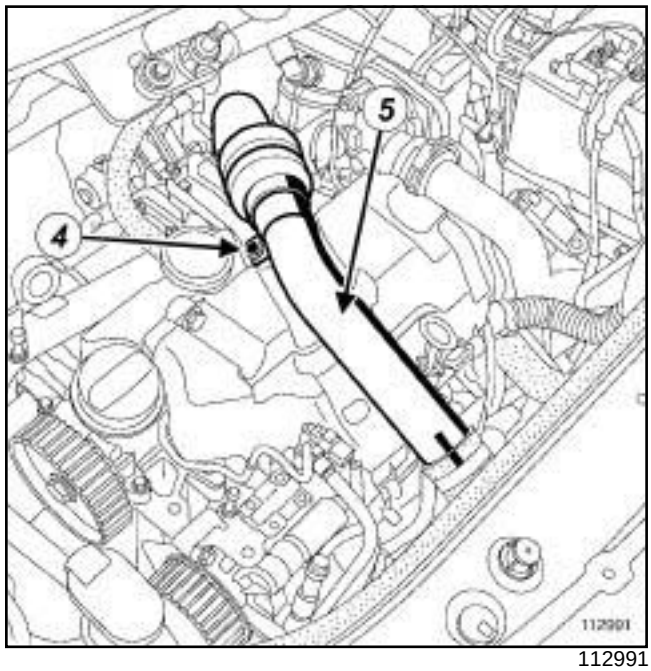

112991

❏ Remove the stainless steel pipe bolt (**4**) .

❏ Move the air inlet duct to one side (**5**) .

B84 or C84 or G84 or S84, and K9K, and 732 or 734

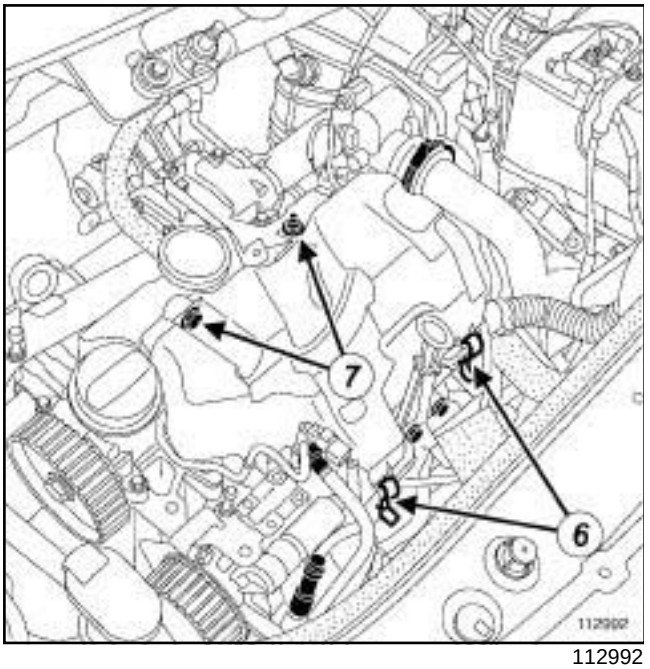

112992

❑ Unclip the injector rail protector cover (**6**) .

❑ Remove:

- the injector rail protector cover bolt and nut (**7**) ,
- the injector rail protector cover.

❑ Refit the clip on the stainless steel pipe, if necessary.

❑ Clip the stainless steel pipe to the turbocharger.

❑ Refit the air inlet duct onto the damper flap.

❑ Tighten the clip.

❑ Connect:

- the air inlet pressure sensor connector,
- the battery (see **Battery : Removal - Refitting**) (MR 364, 80A, Battery).

Note:

The **diagnostic tool** can be used for testing the high pressure circuit with the engine running.

This command can be used to run fault finding on a leak due to an incorrectly fitted or tightened union. This command only works if the engine coolant temperature is above **60°C**. The fault finding procedure will not reveal small leaks due to incorrect tightening.

❑ Activate the command **AC029 « test d'étanchéité circuit haute pression »** , in the « fuel circuit / LPG » tab.

WARNING

Do not leave anything on the side of the engine housing during the test phase (significant vibration).

Note:

The engine automatically runs a cycle of four accelerations and decelerations to lower the rail pressure.

❑ Check that there are no leaks in the high pressure circuit.

❑ Deal with the causes of any leaks.

❑ Disconnect:

- the battery (see **Battery : Removal - Refitting**) (MR 364, 80A, Battery).
- the air inlet pressure sensor connector.

❑ Loosen the clip and move the air inlet duct to one side.

❑ Pull the stainless steel pipe clip.

❑ Remove the air inlet duct.

❑ Refit:

- the injector rail protector cover,
- the injector rail protector cover bolt and nut.

❑ Clip the injector rail protector cover into place.

❑ Refit the clip on the stainless steel pipe, if necessary.

❑ Clip the stainless steel pipe to the turbocharger.

❑ Refit:

- the stainless steel pipe bolts,
- the air inlet duct on the damper valve.

❑ Tighten the clip.

❑ Connect:

- the air inlet pressure sensor connector,
- the battery (see **Battery : Removal - Refitting**) (MR 364, 80A, Battery).
- the engine covers.

K9K, and 732 or 734

Essential special tooling	
Mot. 1566	Spanner for removing high pressure pipes.
Mot. 1746	Offset spanner for tightening high pressure pump pipes.

Essential equipment
diagnostic tool

Tightening torques ▽	
yellow high pressure pipe nuts	**24 N.m**
silver high pressure pipe nuts	**28 N.m**

IMPORTANT
Before carrying out any work on the injection system, check using the **diagnostic tool** :

- that the injector rail is not under pressure,

- that the fuel temperature is not too high.

It is essential to respect the safety and cleanliness advice given in this document whenever work is carried out on this system (see **13B**, **Diesel injection**, **Diesel injection: Precautions for repair**, page **13B-12**) .

WARNING
To prevent impurities from entering the circuit, place protective plugs on all fuel circuit components exposed to the open air.

WARNING

Tighten to a torque of **38 N.m** the « pump-rail » and « rail-injector » high pressure pipes, part no.:

- **77 01 207 025**
- **77 01 207 026**
- **77 01 207 027**
- **77 01 207 028**
- **77 01 207 029**

For high pressure pipes with different part numbers, tighten to a torque of **24 N.m**.

REMOVAL

I - REMOVAL PREPARATION OPERATION

❑ Switch off the ignition and wait **30 seconds** before starting work on the injection system.

❑ Remove the engine covers.

❑ Disconnect the battery (see **Battery: Removal - Refitting**) (80A, Battery).

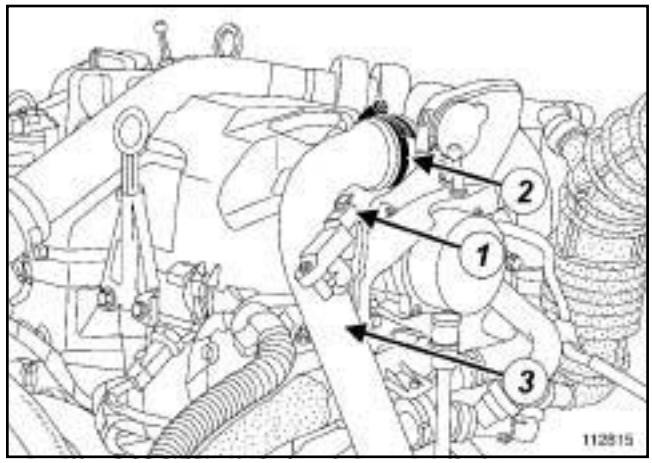

112815

❑ Disconnect the connector (**1**) from the inlet air pressure sensor.

❑ Loosen the clip (**2**) and move the air inlet duct (**3**) to one side.

K9K, and 732 or 734

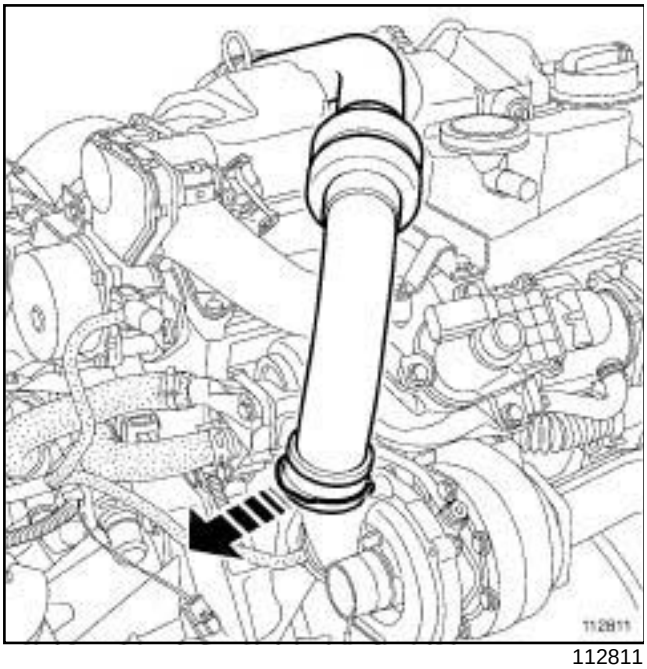

112811

❑ Pull the clip.

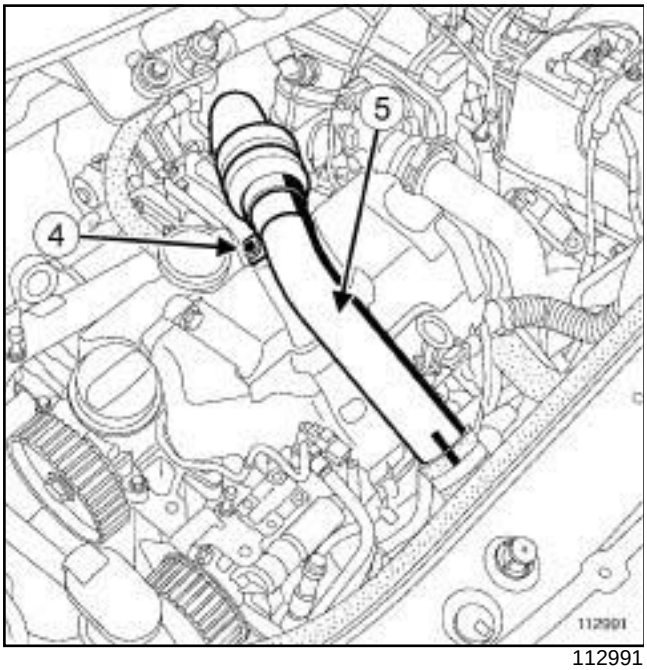

112991

❑ Remove the stainless steel pipe bolt (**4**) .

❑ Move the air inlet duct (**5**) to one side.

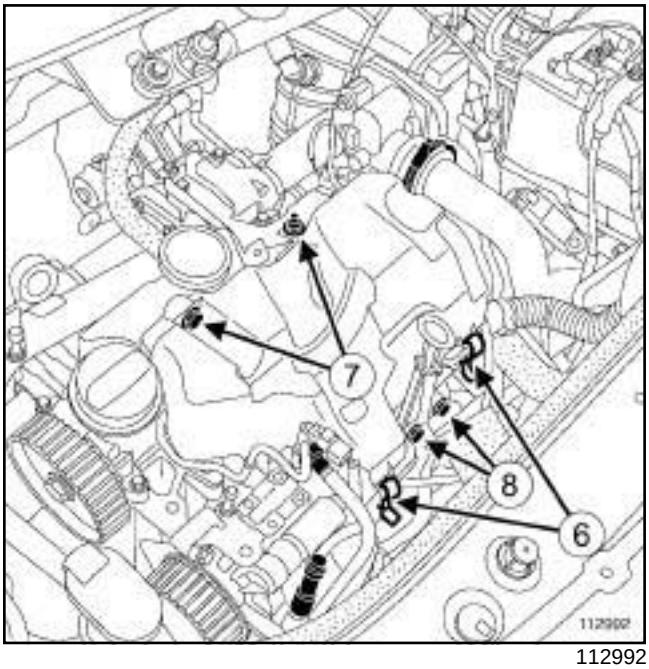

112992

❑ Unclip the injector rail protector cover (**6**) .

❑ Remove:

- the injector rail protector cover bolt and nut (**7**) ,
- the injector rail protector cover,
- the dipstick,
- the dipstick duct bolts (**8**) .

❑ Move the dipstick duct to one side.

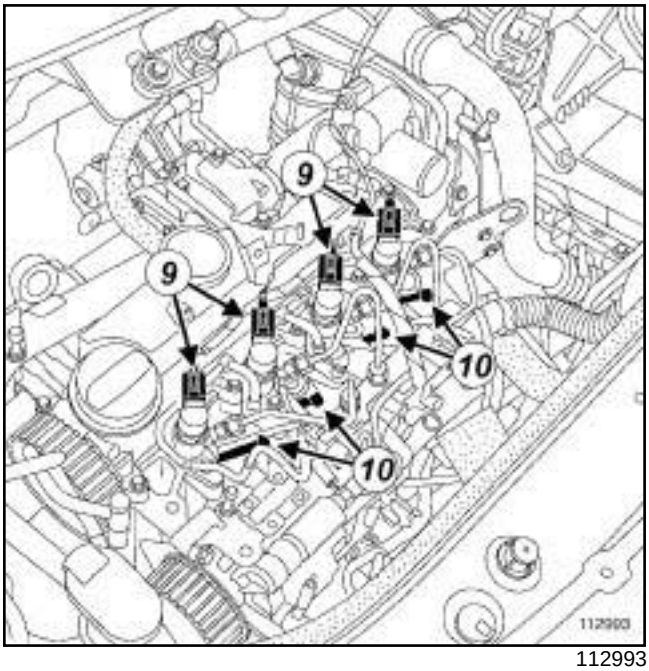

112993

❑ Disconnect:

- the connector (**9**) from the injectors,

K9K, and 732 or 734

- the connector (**10**) from the heater plugs.

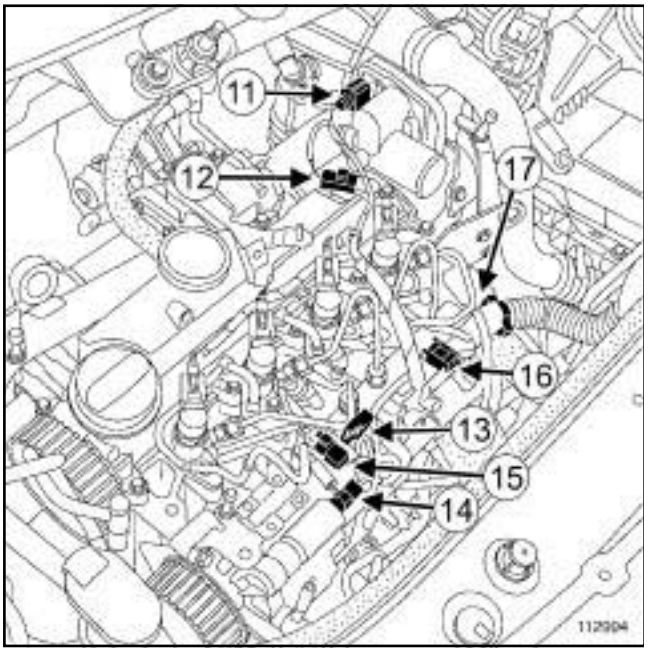

112994

❑ Disconnect:

- the damper valve connector (**11**) ,
- the connector (**12**) from the camshaft position sensor,
- the pressure regulation solenoid valve connector (**13**) ,
- the flow regulation solenoid valve connector (**14**) ,
- the diesel temperature sensor connector (**15**) ,
- the rail pressure sensor connector.

❑ Unclip the wiring harness clip (**16**) .

❑ Remove the wiring harness clip nut (**17**) .

❑ Move the wiring harness to one side.

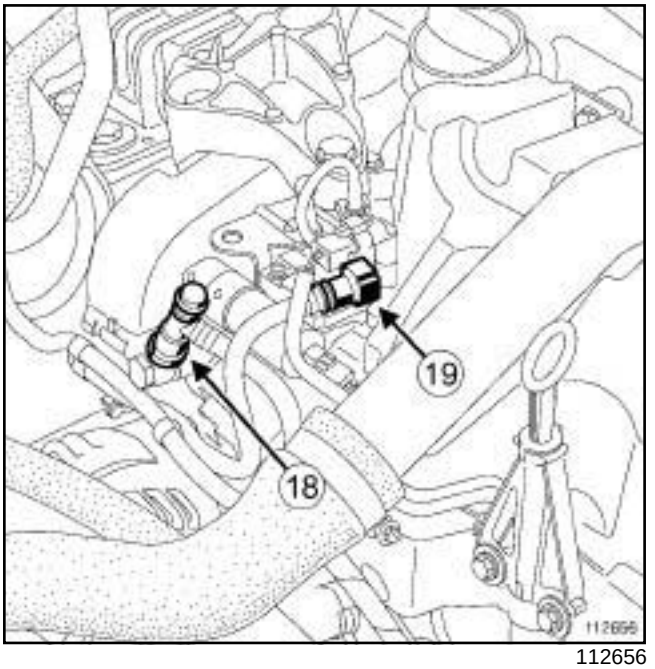

112656

❑ Protect the alternator from fuel outflow.

❑ Pour cleaning product into a container.

IMPORTANT
Wear leaktight gloves (Nitrile type) for this operation.

❑ Soak the brush with cleaning product and clean the fuel supply and return pipe unions.

❑

IMPORTANT
Wear protective glasses.

WARNING
Do not blow compressed air once the fuel circuit is open, otherwise impurities may enter the system. Use cloths if necessary.

Blast the cleaned areas with compressed air then dry using new cloths.

❑ Disconnect:

- the fuel supply pipe (**18**) ,
- the fuel return pipe (**19**) .

Note:
Make preparations for fuel outflow. Clean with new cloths.

❑ Fit the correct blanking plugs.

K9K, and 732 or 734

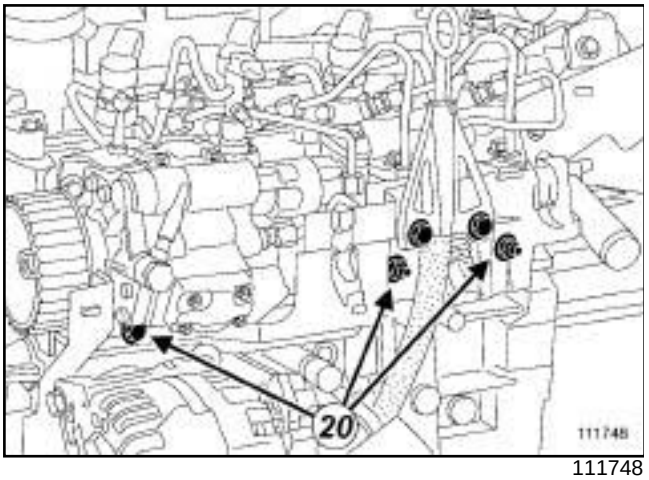

111748

❑ Unclip the diesel evacuation pipe.

❑ Remove:

- the injector rail protector mounting bolt and nuts (**20**) ,
- the injector rail protector support.

❑ Soak the brush with cleaning product, then clean the unions:

- on the high pressure pump fuel return pipe, taking care not to soak the diesel fuel temperature sensor,
- on the high pressure pipe between the high pressure pump and the injector rail,

❑ Blast the cleaned areas with compressed air then dry using new cloths.

II - OPERATION FOR REMOVAL OF PART CONCERNED

❑ Remove the high pressure pipe between the high pressure pump and the injector rail and dispose of it in a bin.

> **WARNING**
> When loosening the connector of the high pressure pipe, the intermediate nut must be secured on the pump using a lock wrench.

> Note:
> Make preparations for fuel outflow. Clean with new cloths.

❑ Fit the correct blanking plugs.

REFITTING

I - REFITTING PREPARATION OPERATION

❑ **parts always to be replaced: High-pressure pipe between the pump and rail (11,05,03,02)**

❑

> **WARNING**
> Only remove the blanking plugs immediately before connecting the fuel circuit pipes.
>
> The plugs are single-use. Do not reuse them; dispose of the whole set after use.

❑ Take the new high pressure pipe out of its plastic bag.

❑ Remove the blanking plugs.

II - REFITTING OPERATION FOR PART CONCERNED

❑ Fit the new high pressure pipe between the injector rail and the high pressure pump.

> Note:
> If the new pipes kit does not contain an applicator, do not lubricate the pipe threads (as they are self-lubricating pipes).

❑ Finger tighten the high pressure pipe nuts, starting with the one at the injector rail end.

❑ Torque tighten the **yellow high pressure pipe nuts (24 N.m)** using the **(Mot. 1566)** or the **(Mot. 1746)** and starting with the injector rail end.

❑ Torque tighten the **silver high pressure pipe nuts (28 N.m)** using the **(Mot. 1566)** or the **(Mot. 1746)** and starting with the injector rail end.

III - FINAL OPERATION

❑ Refit:

- the injector rail protector support,
- the mounting nuts and bolt of the injector rail protector support.

❑ Clip the diesel evacuation pipe into place.

❑ Remove the blanking plugs.

❑ Connect:

- the fuel supply pipe,
- the fuel return pipe.

❑ Fit the wiring harness.

K9K, and 732 or 734

- ❑ Refit the wiring harness clip nut.
- ❑ Clip on the wiring harness clip.
- ❑ Connect:
  - the rail pressure sensor connector,
  - the diesel temperature sensor connector ,
  - the flow regulation solenoid valve connector,
  - the pressure regulation solenoid valve connector,
  - the cylinder marking sensor connector,
  - the damper valve connector,
  - the heater plug connector.
  - the connector of the injectors.
- ❑ Refit:
  - the dipstick duct mounting bolts.
  - the dipstick,
  - the injector rail protector cover,
  - the injector rail protector cover mounting nut and bolt,
- ❑ Clip the injector rail protector cover into place.
- ❑ Refit the clip on the stainless steel pipe, if necessary.
- ❑ Clip the stainless steel pipe to the turbocharger.
- ❑ Refit:
  - the stainless steel pipe mounting bolt,
  - the air inlet duct on the damper valve.
- ❑ Tighten the clip.
- ❑ Connect:
  - the air inlet pressure sensor connector,
  - the battery (see **Battery: Removal - Refitting**) (MR 364, 80A, Battery)
- ❑ Reprime the fuel circuit with the manual priming pump.
- ❑ Refit the engine covers.
- ❑ Using the **diagnostic tool**, clear any faults stored by the injection computer, before restarting the engine.

WARNING

Check that there are no diesel leaks:

- check the sealing after repair (see **13B**, **Diesel injection**, **High pressure pipe: Checking**, page **13B-157**) ,
- let the engine run at idle speed until the engine cooling fan starts to operate,
- accelerate several times at no load,
- carry out a road test,
- switch off the ignition,
- check that there are no diesel leaks.

- ❑ Use the **diagnostic tool** to check that there are no stored faults; clear them if necessary.

K9K, and 722 or 728 or 729

Essential special tooling	
Mot. 1746	Offset spanner for tightening high pressure pump pipes.

Essential equipment
diagnostic tool

Tightening torques ▽	
yellow high pressure pipe unions	**24 N.m**
silver high pressure pipe unions	**28 N.m**

IMPORTANT

Before carrying out any work on the injection circuit, check using the **diagnostic tool** :

- that the injector rail is not under pressure,

- that the fuel temperature is not too high.

During each operation, always respect the repair precautions relating to diesel injection.

Loosening a high pressure pipe union when the engine is running is prohibited.

WARNING

To prevent impurities from entering the circuit, place protective plugs on all fuel circuit components exposed to the open air.

WARNING

Torque tighten (**(38 N.m)** the « pump-rail » and « rail-injectors » high pressure pipes with the following part numbers:

- **77 01 207 025**,

- **77 01 207 026**,

- **77 01 207 027**,

- **77 01 207 028**,

- **77 01 207 028**.

for high pressure pipes with different part numbers, tighten to a torque of **(24 N.m)**.

REMOVAL

I - REMOVAL PREPARATION OPERATION

❑ Disconnect the battery (see **Battery : Removal - Refitting**) (80A, Battery).

K9K, and 722

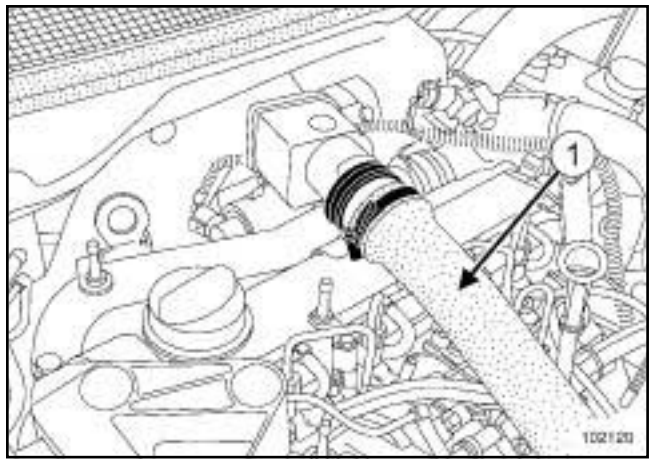

102120

❑ Disconnect the air inlet duct (**1**) .

K9K, and 722 or 728 or 729

K9K, and 728 or 729

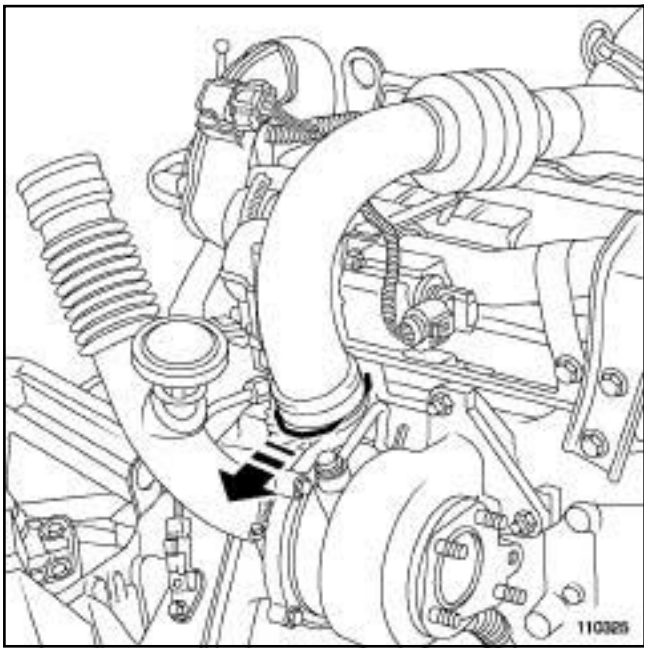

110325

❑ Pull the clip.

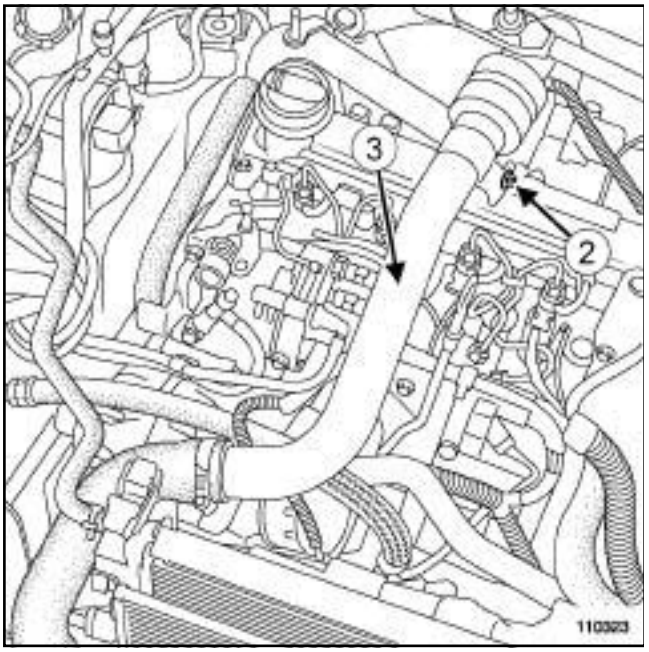

110323

❑ Undo the bolt (**2**) .

❑ Remove the air duct (**3**) .

❑ Unclip the dipstick.

❑ Remove the dipstick.

II - OPERATION FOR REMOVAL OF PART CONCERNED

❑ Clean the « pump-rail » pipe (see **13B**, **Diesel injection**, **Diesel injection: Precautions for repair**, page **13B-12**) .

❑ Undo:

- the high pressure pipe nut at the pump end,
- the high pressure pipe nut at the injector rail end.

❑ Fit blanking plugs into the openings.

❑ Throw away the pipe.

REFITTING

I - REFITTING PREPARATION OPERATION

❑ **parts always to be replaced: High-pressure pipe between the pump and rail (11,05,03,02)**

K9K, and 722 or 728 or 729

20960

❑

WARNING

Before fitting a new high pressure pipe, lightly lubricate the nut threads with oil from the applicator provided with the new part.

Be careful not to allow oil into the high pressure pipe.

Do not lubricate high pressure pipes supplied without an applicator, as these high pressure pipes are self-lubricating.

WARNING

Do not remove the blanking plugs from each component until the last moment.

II - REFITTING OPERATION FOR PART CONCERNED

❑ Remove the blanking plugs.

❑ Insert the high pressure pipe olive in the high pressure pump high pressure outlet taper.

❑ Insert the high pressure pipe olive into the injector rail inlet taper.

❑ Finger tighten the high pressure pipe nuts, starting with the one at the rail end.

❑ Slightly pretighten the high pressure pipe nuts.

❑ Torque tighten the **yellow high pressure pipe unions (24 N.m)** using the tool **(Mot. 1746)**.

❑ Torque tighten the **silver high pressure pipe unions (28 N.m)** using the tool **(Mot. 1746)**.

III - FINAL OPERATION

❑ Insert the dipstick.

K9K, and 722

❑ Connect the air inlet duct.

❑ Tighten the clip.

K9K, and 728 or 729

❑ Position the air inlet duct on to the turbocharger.

❑ Fit the clip.

❑ Tighten the air inlet duct bolt on the rocker cover.

K9K, and 722 or 728 or 729

- Connect the battery (see **Battery : Removal - Refitting**) (80A, Battery).
- Prime the diesel circuit using the priming pump.
- Ensure that there are no leaks, by checking the sealing after repair (see **13B**, **Diesel injection**, **High pressure pipe: Checking**, page **13B-157**) .

WARNING

Check that there are no diesel leaks:

- run the engine at idle speed,
- accelerate several times at no load,
- switch off the ignition,
- confirm that there is no diesel fuel leakage.

M9R

Essential special tooling	
Mot. 1746	Offset spanner for tightening high pressure pump pipes.
Mot. 1566	Spanner for removing high pressure pipes.

Essential equipment
diagnostic tool

Tightening torques ▽	
nut at the pump end using prosteel spanner 77 11 223 720	**30 N.m**
nut at the rail end using prosteel spanner 77 11 223 720 or 77 11 223 721	**34 N.m**
pump - rail high pressure pipe bolt on the rocker cover	**10 N.m**

IMPORTANT

Before carrying out any work on the injection system, check using the **diagnostic tool** :

- that the rail is not under pressure,

- that the fuel temperature is not too high.

Working on the circuit with the engine running is strictly forbidden.

IMPORTANT

To avoid all risk of damage to the systems, apply the safety and cleanliness instructions and operation recommendations before carrying out any repair (see **13B**, **Diesel injection**, **Diesel injection: Precautions for repair**, page **13B-12**) .

REMOVAL

I - REMOVAL PREPARATION OPERATION

❑ Remove the front engine cover.

❑ Disconnect the battery (see **Battery: Removal - Refitting**) (80A, Battery).

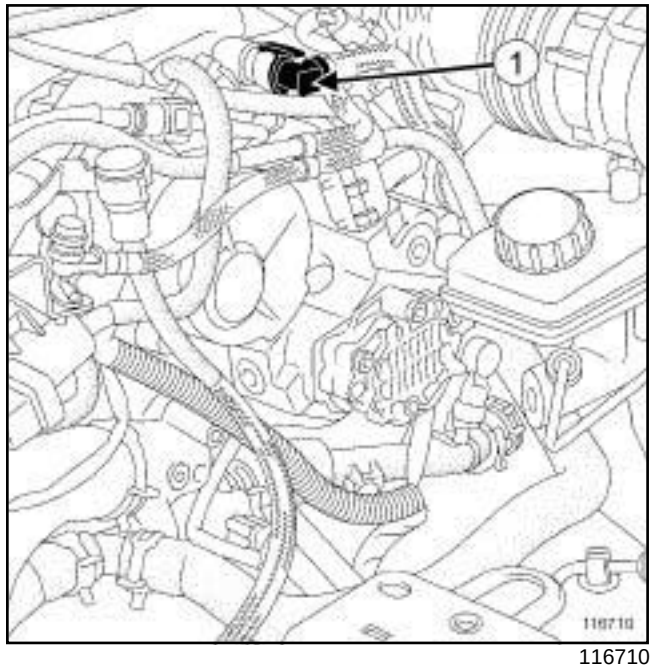

116710

❑ Disconnect the brake servo pipe (**1**) from the vacuum pump.

❑ Remove the injector rail protector (see **13B**, **Diesel injection**, **Injector rail protector: Removal - Refitting**, page **13B-154**) .

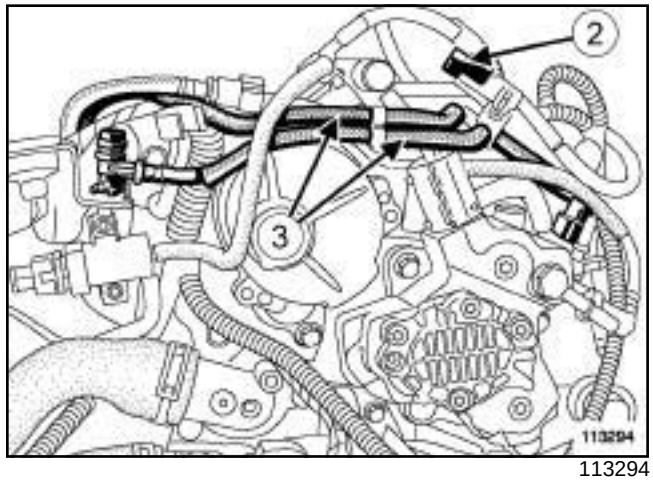

113294

❑ Disconnect:

- the fuel temperature sensor connector (**2**) ,

- the turbocharging pressure regulation solenoid valve hose on the vacuum pump.

❑ Detach the diesel return pipes (**3**) from the retaining bracket.

M9R

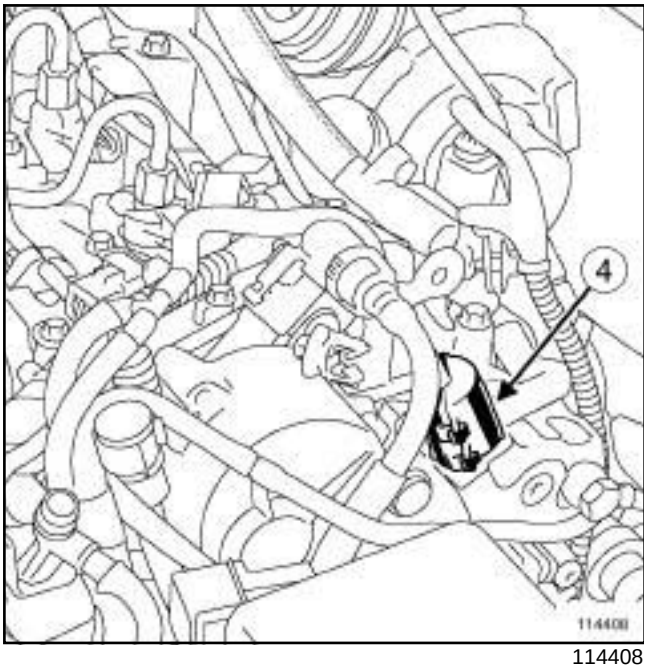

114408

❑ Detach the high pressure pipe nut protector (**4**) from the injection pump.

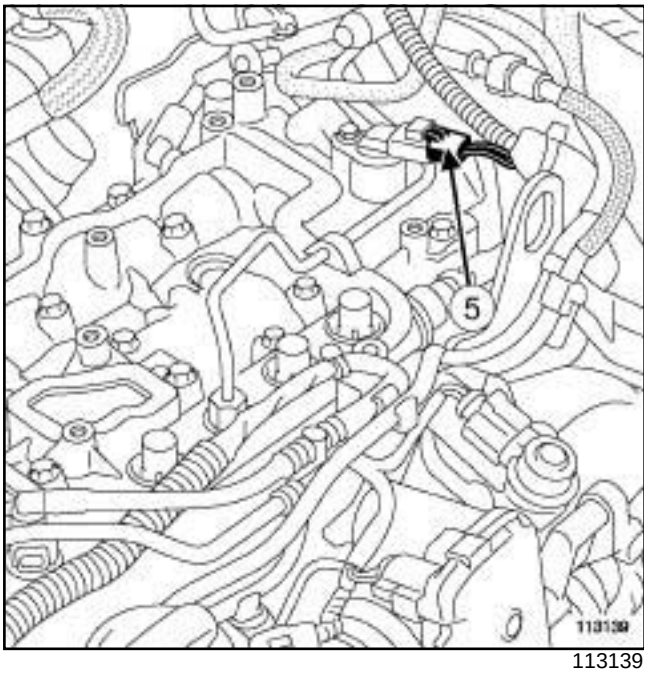

113139

❑ Disconnect the connector (**5**) from the camshaft position sensor.

❑ Move aside the wiring.

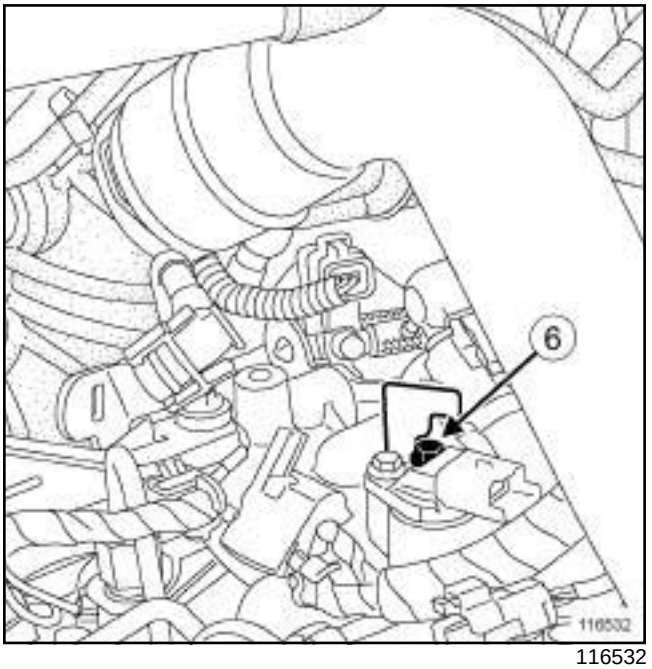

116532

❑ Remove:

- the bolt (**6**) of the wiring mounting,
- the wiring mounting.

M9R

II - OPERATION FOR REMOVAL OF PART CONCERNED

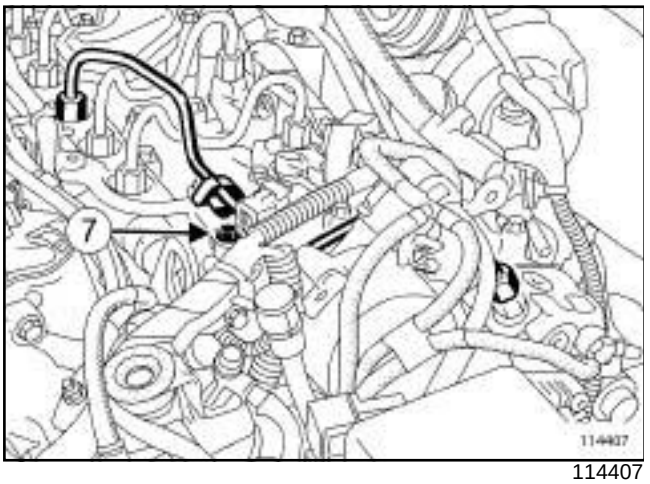

114407

- ❑ Mark the position of the « pump - rail » high pressure pipe rubber pad on the rocker cover.
- ❑ Undo:
  - the high pressure pipe nut on the injector rail side, using the **(Mot. 1746)**,
  - the high pressure pipe nut on the injection pump side, using the **(Mot. 1566)**,
- ❑ Remove:
  - the high pressure pipe bolt (**7**) from the rocker cover,
  - the high pressure pipe.
- ❑ Plug the openings.

REFITTING

I - REFITTING PREPARATION OPERATION

- ❑ **parts always to be replaced: High pressure pipe (11,05,03,03)**.

> **WARNING**
> Before fitting a new high pressure pipe, lightly lubricate the nut threads with the oil from the applicator provided in the new parts kit.
>
> Be careful not to allow oil into the high pressure pipe.
>
> Do not lubricate high pressure pipes supplied without an applicator, as these high pressure pipes are self-lubricating.

> **WARNING**
> Do not remove the blanking plugs from each component until the last moment.
>
> Also, do not remove the components from their packaging until they are to be fitted to the vehicle.

II - REFITTING OPERATION FOR PART CONCERNED

- ❑ Remove the blanking plugs.
- ❑ Refit a new high pressure pipe.
- ❑ Position:
  - the high pressure pipe olive in the injector rail taper.
  - the high pressure pipe olive into the high pressure pump outlet taper,
  - the pad between the high pressure pipe and the rocker cover.
- ❑ Fit the high pressure pipe nuts without tightening them, starting with the nut at the injector rail end.
- ❑ Tighten to torque and in order:
  - the **nut at the pump end using prosteel spanner 77 11 223 720 (30 N.m)**,
  - the **nut at the rail end using prosteel spanner 77 11 223 720 or 77 11 223 721 (34 N.m)**.
- ❑ Torque tighten the **pump - rail high pressure pipe bolt on the rocker cover (10 N.m)**.

M9R

III - FINAL OPERATION

❑ Refit:

- the wiring mounting,
- the bolts of the wiring mounting.

❑ Rotate the intercooler air inlet pipe clip to refit the clip in its housing.

❑ Clip the intercooler air inlet pipe on the turbocharger.

❑ Connect:

- the camshaft position sensor connector,
- the fuel temperature sensor connector,
- the brake servo pipe from the vacuum pump.
- the turbocharging pressure regulation solenoid valve hose on the vacuum pump,
- the battery (see **Battery: Removal - Refitting**) (80A, Battery).

❑ Using the **diagnostic tool**, run scenario **SC0035** (high pressure fuel circuit fault finding) when replacing or removing - refitting (see **Fault finding - Interpretation of commands**) (13B, Diesel injection).

❑ In the event of a leak, repair the part concerned.

❑ Disconnect the battery (see **Battery: Removal - Refitting**) (80A, Battery).

❑ Rotate the intercooler air inlet pipe clip.

❑ Remove the intercooler inlet air pipe.

❑ Fit the wiring.

❑ Clip:

- the high pressure pipe nut protector on the injection pump,
- the diesel return pipes on the retaining bracket.

❑ Refit the injector rail protector (see **13B**, **Diesel injection**, **Injector rail protector: Removal - Refitting**, page **13B-154**) .

❑ Connect the battery (see **Battery : Removal - Refitting**) (80A, Battery).

❑ Refit the engine cover.

F9Q, and 800 or 803 or 804 or 808

Essential special tooling	
Mot. 1566	Spanner for removing high pressure pipes.

Essential equipment
diagnostic tool

Tightening torques ▽	
high pressure pipe nut on the pump side	**27 Nm**
high pressure pipe nut on the injector rail (gold rail)	**29 Nm**
high pressure pipe nut on the injector rail (grey rail)	**37 Nm**

IMPORTANT

Before carrying out any work on the injection system, check using the **diagnostic tool** :

- that the rail is not under pressure,
- that the fuel temperature is not too high.

Working on the circuit with the engine running is strictly forbidden.

IMPORTANT

Consult the safety and cleanliness advice and operation recommendations before carrying out any repair (see **13B**, **Diesel injection**, **Diesel injection: Precautions for repair**, page **13B-12**) .

REMOVAL

I - REMOVAL PREPARATION OPERATION

❑ Remove the front engine cover.

❑ Disconnect the battery (see **Battery: Removal - Refitting**) (MR 364, 80A, Battery).

❑ Remove:

- the air inlet duct (see **12A**, **Fuel mixture**, **Air inlet duct: Removal - Refitting**, page **12A-46**) ,
- the injector rail protector (see **13B**, **Diesel injection**, **Injector rail protector: Removal - Refitting**, page **13B-154**) .

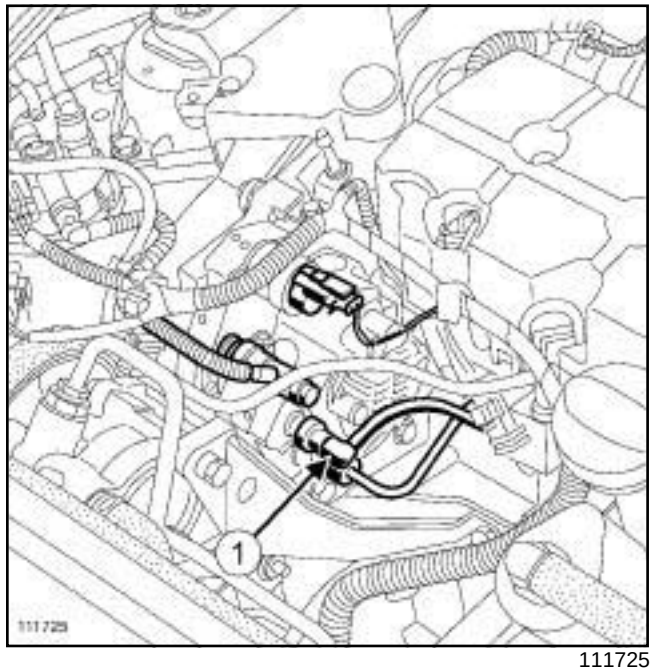

111725

❑ Disconnect the diesel return pipe union (**1**) from the high pressure pump.

II - OPERATION FOR REMOVAL OF PART CONCERNED

❑ Undo:

- the high pressure pipe nut on the high pressure pump side using the **(Mot. 1566)**,
- the high pressure pipe nut at the rail end using the **(Mot. 1566)**.

❑ Move the nuts along the pipe, keeping the olive in contact with the taper.

F9Q, and 800 or 803 or 804 or 808

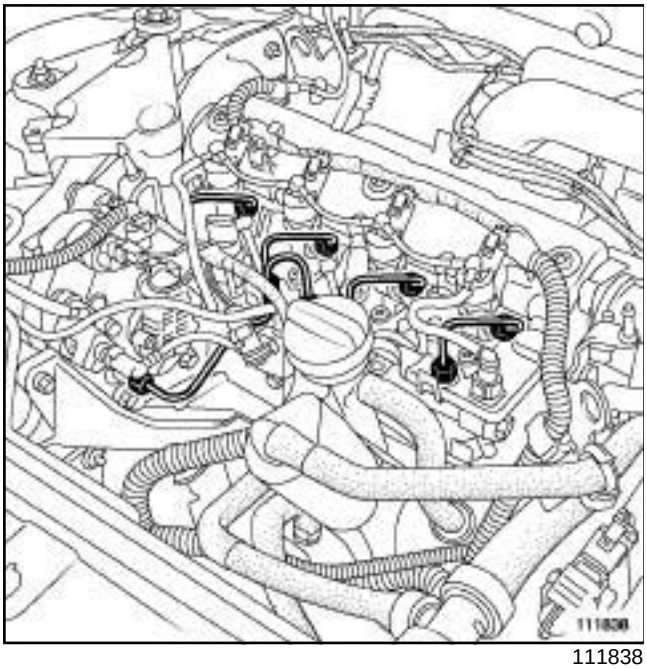

111838

❑ Plug the openings (see **13B**, **Diesel injection**, **Diesel injection: Precautions for repair**, page **13B-12**) .

REFITTING

I - REFITTING OPERATION FOR PART CONCERNED

❑ Always replace any high pressure pipe or high pressure pipe clip removed with a new one.

❑ Remove the blanking plugs.

❑ Position:

- the high pressure pipe olive in the injector rail inlet taper,
- the high pressure pipe olive in the high pressure pump outlet taper.

❑ Without tightening, screw on the high pressure pipe nuts.

❑ Using **(Mot. 1566)**, torque tighten the **high pressure pipe nut on the pump side (27 Nm)**,

> Note:
>
> There are two types of injector rail which can be fitted to the engine. The two rails are made of different material and there is a specific tightening torque for the pipes on the rail. They are different colours:
>
> - gold rail,
> - or grey rail.

❑ Using the **(Mot. 1566)**, tighten to torque:

- the **high pressure pipe nut on the injector rail (gold rail) (29 Nm)**,
- the **high pressure pipe nut on the injector rail (grey rail) (37 Nm)**.

II - FINAL OPERATION.

❑ Connect the diesel return pipe union to the high pressure pump.

❑ Refit the air inlet duct, with its old gaskets (see **12A**, **Fuel mixture**, **Air inlet duct: Removal - Refitting**, page **12A-46**) .

❑ Connect the battery (see **Battery : Removal - Refitting**) (MR 364, 80A, Battery).

❑ Start the engine and check that there are no leaks.

❑ Disconnect the battery (see **Battery : Removal - Refitting**) (MR 364, 80A, Battery).

❑ Remove the air inlet duct (see **12A**, **Fuel mixture**, **Air inlet duct: Removal - Refitting**, page **12A-46**) .

❑ Refit:

- the injector rail protector (see **13B**, **Diesel injection**, **Injector rail protector: Removal - Refitting**, page **13B-154**) .
- the air inlet duct, with new gaskets (see **12A**, **Fuel mixture**, **Air inlet duct: Removal - Refitting**, page **12A-46**) .

❑ Connect the battery (see **Battery : Removal - Refitting**) (MR 364, 80A, Battery).

❑ Refit the engine cover.

F9Q, and 816 or 818

Essential special tooling	
Mot. 1566	Spanner for removing high pressure pipes.

Essential equipment
diagnostic tool

Tightening torques ▽	
high pressure pipe nut on the pump side	**27 Nm**
high pressure pipe nut on the injector rail (gold rail)	**29 Nm**
high pressure pipe nut on the injector rail (grey rail)	**37 Nm**

IMPORTANT

Before carrying out any work on the injection system, check using the **diagnostic tool** :

- that the rail is not under pressure,

- that the fuel temperature is not too high.

Working on the circuit with the engine running is strictly forbidden.

IMPORTANT

Consult the safety and cleanliness advice and operation recommendations before carrying out any repair (see **13B**, **Diesel injection**, **Diesel injection: Precautions for repair**, page **13B-12**) .

REMOVAL

I - REMOVAL PREPARATION OPERATION

❑ Remove the front engine cover.

❑ Disconnect the battery (see **Battery: Removal - Refitting**) (MR 364, 80A, Battery).

❑ Remove:

- the air inlet duct (see **12A**, **Fuel mixture**, **Air inlet duct: Removal - Refitting**, page **12A-46**) ,
- the injector rail protector (see **13B**, **Diesel injection**, **Injector rail protector: Removal - Refitting**, page **13B-154**) .

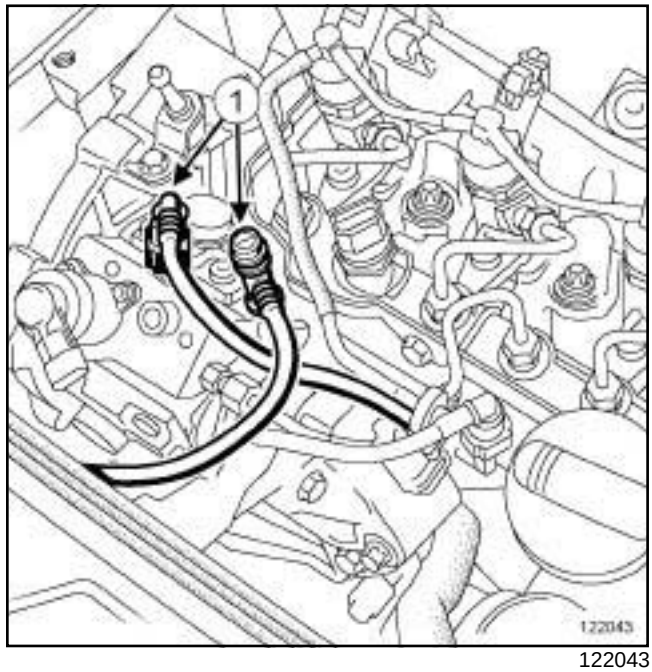

122043

❑ Disconnect the diesel supply and return pipes (**1**) .

❑ Plug the openings (see **13B**, **Diesel injection**, **Diesel injection: Precautions for repair**, page **13B-12**) .

F9Q, and 816 or 818

II - OPERATION FOR REMOVAL OF PART CONCERNED

122042

❑ Undo:

- the high pressure pipe nut on the high pressure pump side using the **(Mot. 1566)**,
- the high pressure pipe nut at the rail end using the **(Mot. 1566)**.

❑ Remove the high pressure pipe.

❑ Plug the openings (see **13B**, **Diesel injection**, **Diesel injection: Precautions for repair**, page **13B-12**) .

REFITTING

I - REFITTING OPERATION FOR PART CONCERNED

❑ Always replace any high pressure pipe or high pressure pipe clip removed with a new one.

❑

> **WARNING**
>
> Do not remove the blanking plugs from each component until the last moment.
>
> Also, do not remove the components from their packaging until they are to be fitted to the vehicle.

Remove the blanking plugs.

❑ Position:

- the high pressure pipe olive in the injector rail inlet taper,
- the high pressure pipe olive in the high pressure pump outlet taper.

❑ Without tightening, screw on the high pressure pipe nuts.

❑ Using **(Mot. 1566)**, torque tighten the **high pressure pipe nut on the pump side (27 Nm)**,

> Note:
>
> There are two types of injector rail which can be fitted to the engine. The two rails are made of different material and there is a specific tightening torque for the pipes on the rail. They are different colours:
>
> - gold rail,
> - or grey rail.

❑ Using the **(Mot. 1566)**, tighten to torque:

- the **high pressure pipe nut on the injector rail (gold rail) (29 Nm)**,
- the **high pressure pipe nut on the injector rail (grey rail) (37 Nm)**.

II - FINAL OPERATION.

❑ Connect the diesel return pipe union to the high pressure pump.

❑ Refit the air inlet duct, with its old gaskets (see **12A**, **Fuel mixture**, **Air inlet duct: Removal - Refitting**, page **12A-46**) .

❑ Connect the battery (see **Battery: Removal - Refitting**) (MR 364, 80A, Battery).

❑ Start the engine and check that there are no leaks.

❑ Remove the air inlet duct (see **12A**, **Fuel mixture**, **Air inlet duct: Removal - Refitting**, page **12A-46**) .

❑ Refit:

- the injector rail protector (see **13B**, **Diesel injection**, **Injector rail protector: Removal - Refitting**, page **13B-154**) .
- the air inlet duct, with new gaskets (see **12A**, **Fuel mixture**, **Air inlet duct: Removal - Refitting**, page **12A-46**) .

❑ Refit the engine cover.

K9K, and 724

Essential special tooling	
Mot. 1566	Spanner for removing high pressure pipes.
Mot. 1746	Offset spanner for tightening high pressure pump pipes.

Tightening torques ▽	
yellow high pressure pipe unions between the high pressure pump and the rail	**24 N.m**
silver high pressure pipe unions between the high pressure pump and the rail	**28 N.m**

IMPORTANT
To avoid all risk of damage to the systems, apply the safety and cleanliness instructions and operation recommendations before carrying out any repair (see **13B**, **Diesel injection**, **Diesel injection: Precautions for repair**, page **13B-12**) .

WARNING
To prevent impurities from entering the circuit, place protective plugs on all fuel circuit components exposed to the open air.

WARNING

Tighten to a torque of **38 N.m** the « pump-rail » and « rail-injector » high pressure pipes, part no.:

- **77 01 207 025**
- **77 01 207 026**
- **77 01 207 027**
- **77 01 207 028**
- **77 01 207 029**

For high pressure pipes with different part numbers, tighten to a torque of **24 N.m**.

IMPORTANT
Wear leaktight gloves (Nitrile type) for this operation.

REMOVAL

I - REMOVAL PREPARATION OPERATION

❑ Remove the front engine cover.

❑ Disconnect the battery (see **Battery: Removal - Refitting**) (80A, Battery).

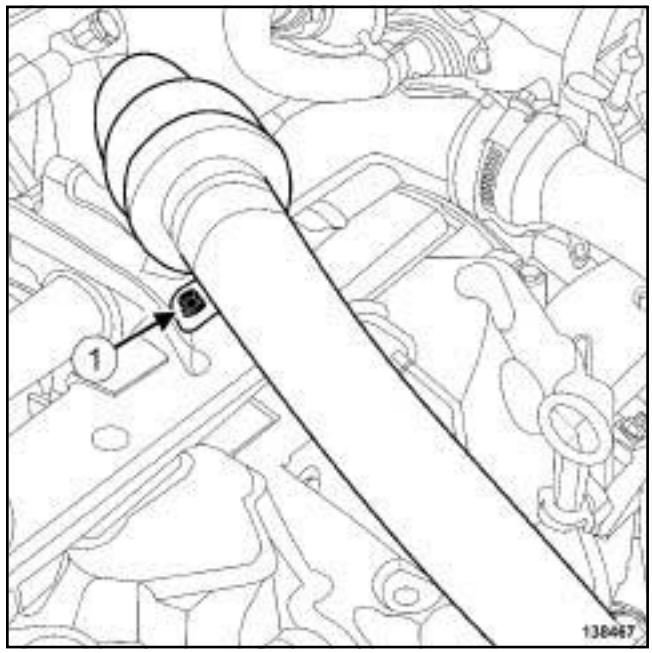

138467

❑ Remove the bolt (**1**) on the intercooler air inlet pipe.

K9K, and 724

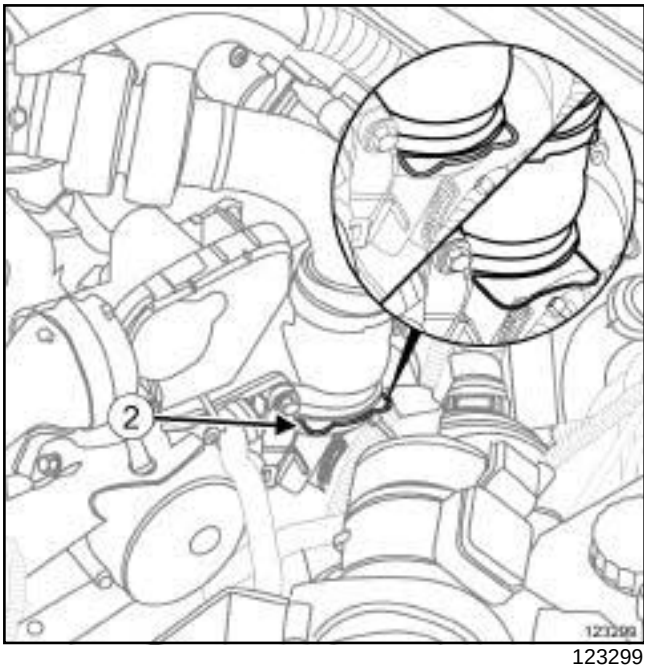

123299

- Pull the clip (**2**) of the intercooler air inlet pipe.
- Disconnect the air inlet pipe from the air pipe on the turbocharger.
- Move aside the intercooler air inlet pipe.

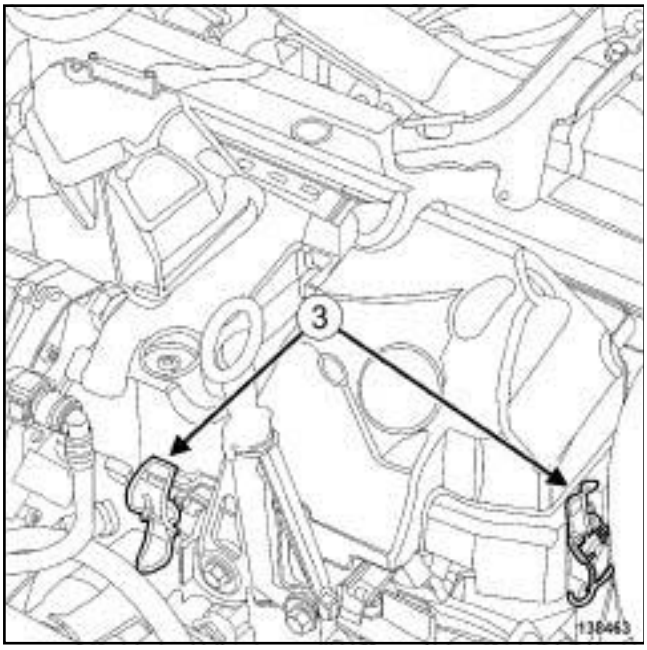

138463

- Unclip the injector rail protector cover at (**3**) .

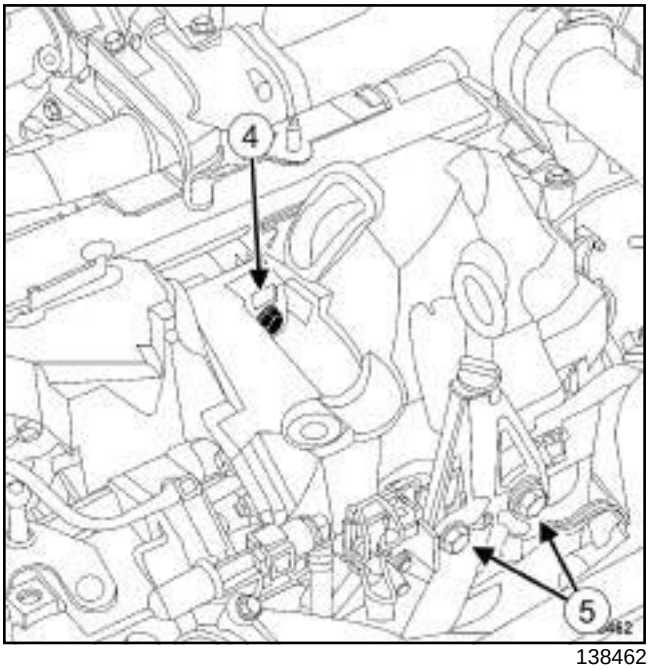

138462

- Remove:

  - the injector rail protector cover bolt (**4**) ,

  - the injector rail protector cover,

  - the dipstick guide bolts (**5**) .

- Move aside the dipstick guide tube.

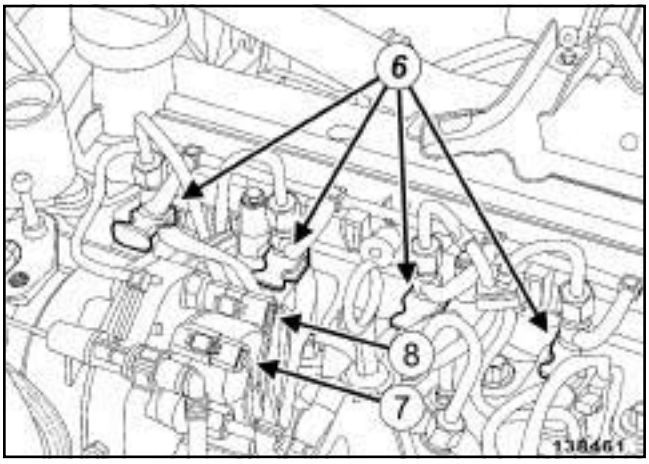

138461

- Disconnect:

  - the heater plug connectors,

  - the diesel injector connectors (**6**) ,

  - the flow actuator connector (**7**) ,

  - the fuel temperature sensor connector (**8**) .

K9K, and 724

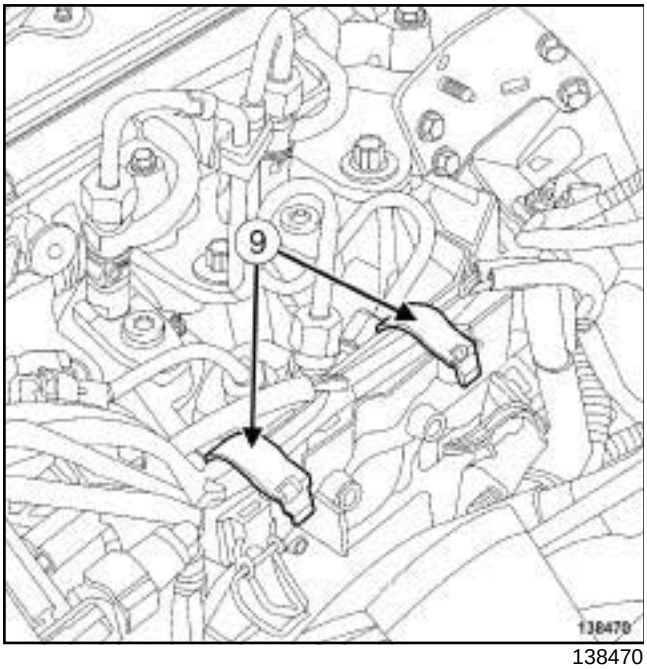

138470

❑ Unclip the injection wiring at (**9**) .

❑ Move the wiring away from the rail protector.

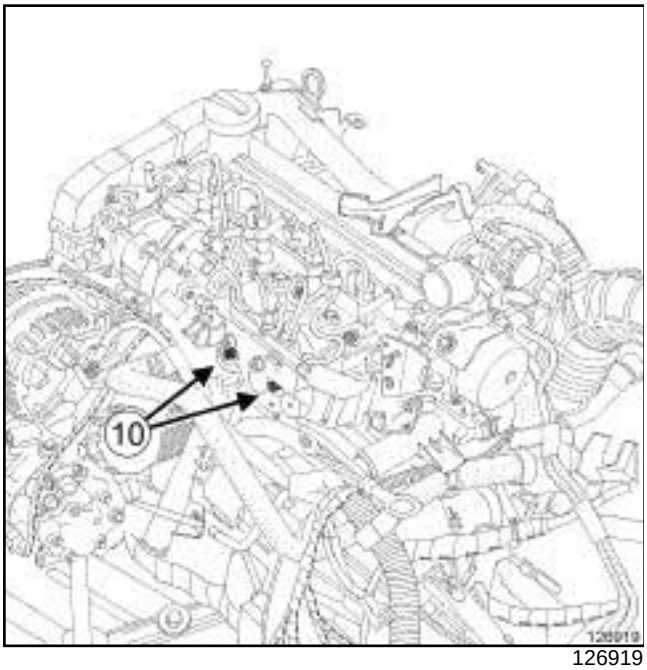

126919

❑ Remove:

- the nuts (**10**) from the injector rail protector,
- the injector rail protector.

II - OPERATION FOR REMOVAL OF PART CONCERNED

❑ Clean the fuel pipe unions between the pump and the injector rail (see **13B**, **Diesel injection**, **Diesel injection: Precautions for repair**, page **13B-12**) .

> **WARNING**
> To avoid any corrosion or damage, protect the areas on which fuel is likely to run.

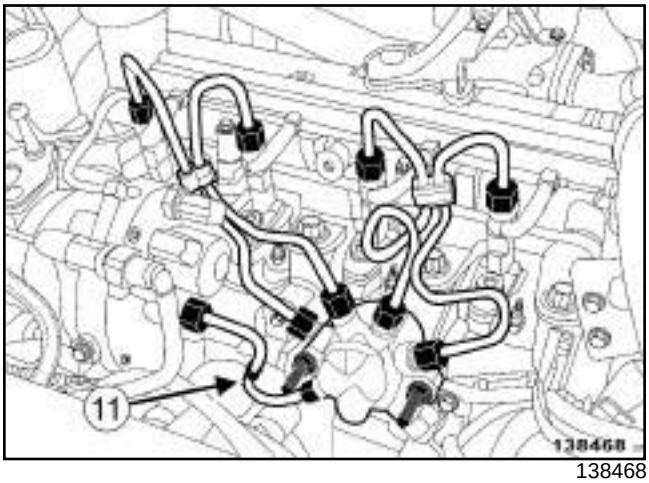

138468

❑ Use the **(Mot. 1566)** to remove the high pressure pipe (**11**) between the high pressure pump and the injector rail, then discard it.

> Note:
> It is essential to use a spanner to hold the high pressure pump intermediate union when loosening the high pressure pipe.

❑ Fit the correct blanking plugs on:

- the high pressure pump opening,
- the injector rail opening.

REFITTING

I - REFITTING PREPARATION OPERATION

❑ **parts always to be replaced: High-pressure pipe between the pump and rail (11,05,03,02)**.

K9K, and 724

20960

❑

WARNING

Before fitting a new high pressure pipe, lightly lubricate the nut threads with the oil from the applicator provided in the new parts kit.

Be careful not to allow oil into the high pressure pipe.

Do not lubricate high pressure pipes supplied without an applicator, as these high pressure pipes are self-lubricating.

WARNING

Do not remove the blanking plugs from each component until the last moment.

Also, do not remove the components from their packaging until they are to be fitted to the vehicle.

II - REFITTING OPERATION FOR PART CONCERNED

❑ Take the new high pressure pipe out of its packaging.

❑ Remove the blanking plugs and dispose of them.

❑ Fit the new high pressure pipe between the injector rail and the high pressure pump.

Note:

If the new pipes kit does not contain an applicator, do not lubricate the pipe threads (as they are self-lubricating pipes).

❑ Screw the high pressure pipe nuts on by hand until contact, starting at the injector rail end.

❑ Using the tool **(Mot. 1566)** or the tool **(Mot. 1746)**, torque tighten the **yellow high pressure pipe unions between the high pressure pump and the rail (24 N.m)**.

❑ Using the tool **(Mot. 1566)** or the tool **(Mot. 1746)**, torque tighten the **silver high pressure pipe unions between the high pressure pump and the rail (28 N.m)**.

III - FINAL OPERATION

❑ Refit the rail protector.

❑ Fit the injection wiring on the injector rail protector.

❑ Clip on the injection wiring clips.

❑ Connect:

- the fuel temperature sensor connector,
- the fuel flow actuator connector,
- the diesel injector connectors,
- the heater plug connectors.

❑ Refit:

- the dipstick guide tube,
- the injector rail protector cover,

❑ Connect the intercooler air inlet pipe on the turbocharger.

❑ Connect the battery (see **Battery : Removal - Refitting**) (80A, Battery).

❑ Reprime the fuel circuit using the manual priming pump.

❑ Check that there are no fuel leaks (see **Diesel injection: Check**) .

❑ Refit the engine cover.

K9K, and 732 or 734

Essential special tooling	
Mot. 1566	Spanner for removing high pressure pipes.
Mot. 1746	Offset spanner for tightening high pressure pump pipes.

Essential equipment
diagnostic tool

Tightening torques ▽	
injector rail nuts	**28 N.m**
yellow high pressure pipe nuts	**24 N.m**
silver high pressure pipe nuts	**28 N.m**

IMPORTANT

Before carrying out any work on the injection system, check using the **diagnostic tool** :

- that the rail is not under pressure,

- that the fuel temperature is not too high.

Working on the circuit with the engine running is strictly forbidden.

WARNING
To prevent impurities from entering the circuit, place protective plugs on all fuel circuit components exposed to the open air.

WARNING

Tighten to a torque of **38 N.m** the « pump-rail » and « rail-injector » high pressure pipes, part no.:

- **77 01 207 025**

- **77 01 207 026**

- **77 01 207 027**

- **77 01 207 028**

- **77 01 207 029**

For high pressure pipes with different part numbers, tighten to a torque of **24 N.m**.

IMPORTANT
Consult the safety and cleanliness advice and operation recommendations before carrying out any repair (see **13B**, **Diesel injection**, **Diesel injection: Precautions for repair**, page **13B-12**) .

REMOVAL

I - REMOVAL PREPARATION OPERATION

❑ Switch off the ignition and wait **30 seconds** before starting work on the injection system.

❑ Remove the engine covers.

❑ Disconnect the battery (see **Battery : Removal - Refitting**) (80A, Battery).

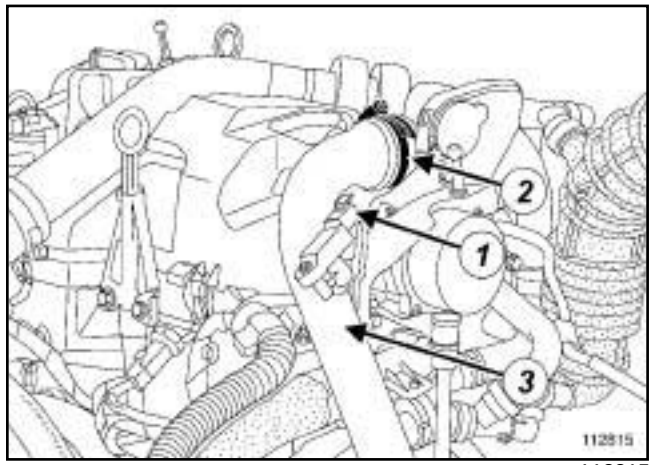

112815

❑ Disconnect the connector (**1**) from the inlet air pressure sensor.

❑ Loosen the clip (**2**) and move the air inlet duct (**3**) to one side.

K9K, and 732 or 734

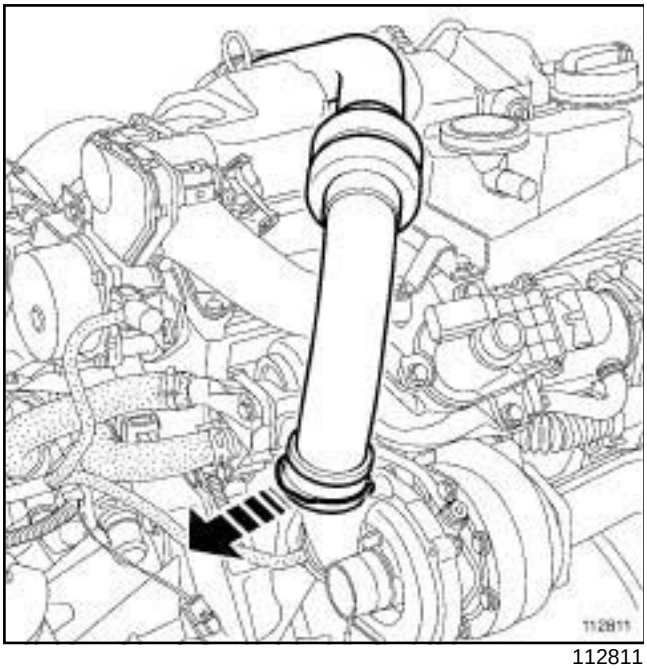

112811

❑ Pull the clip.

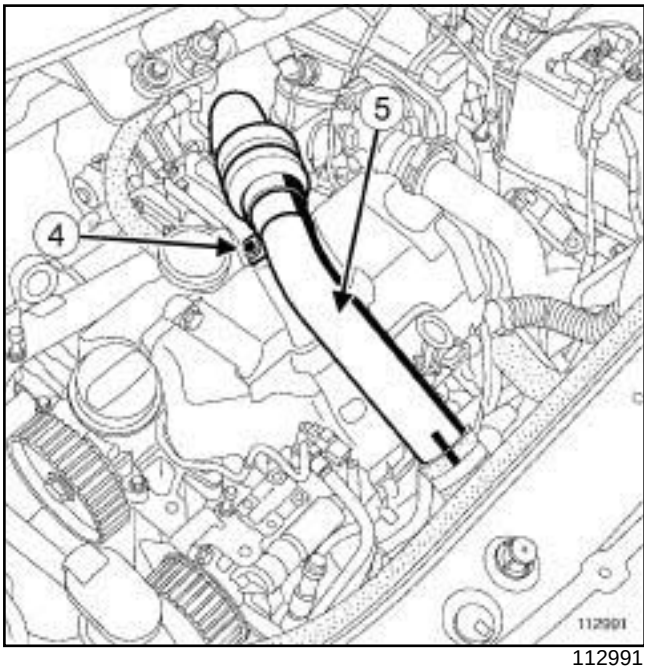

112991

❑ Remove:

- the bolt (**4**) from the stainless steel pipe,
- the stainless steel pipe (**5**) .

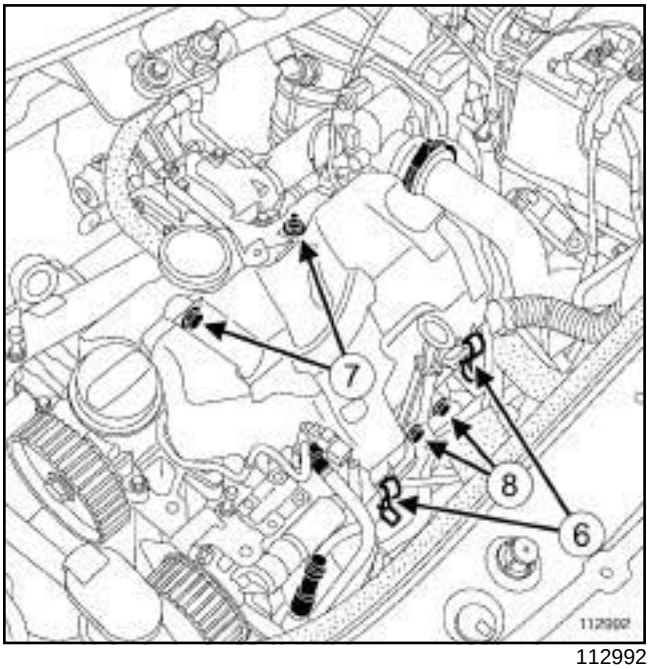

112992

❑ Unclip the injector rail protector cover (**6**) .

❑ Remove:

- the injector rail protector cover bolt and nut (**7**) ,
- the injector rail protector cover,
- the dipstick,
- the dipstick duct bolts (**8**) .

❑ Move the dipstick duct to one side.

❑ Protect the alternator from fuel outflow.

❑ Clean the high pressure pipe unions between the injector rail and the injectors (see **13B**, **Diesel injection**, **Diesel injection: Precautions for repair**, page **13B-12**) .

K9K, and 732 or 734

II - OPERATION FOR REMOVAL OF PART CONCERNED

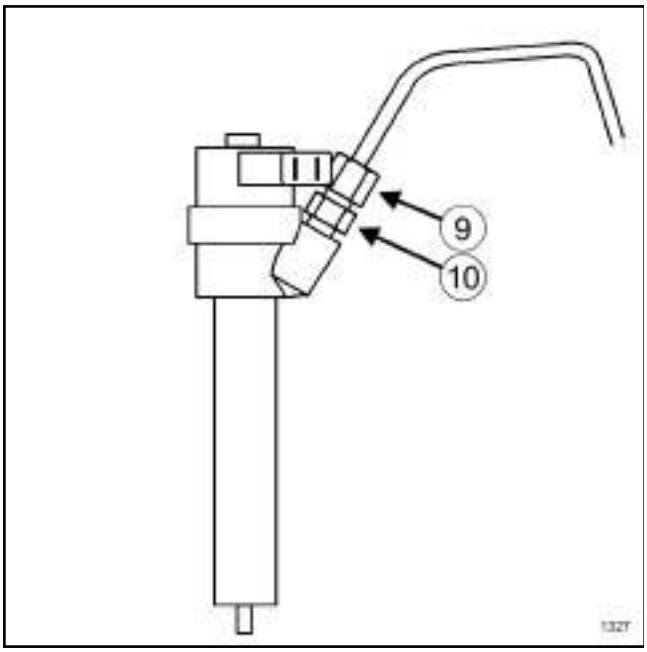

1327

❑

> **WARNING**
> When the high pressure pipe union (**9**) on the injector holder has been loosened, always hold the edge filter retaining nut (**10**) with a lock wrench.

❑ Remove:

- the nut of the high pressure pipe between the injector rail and the injector on the rail end,
- the nut of the high pressure pipe between the injector rail and the injector on the injector end,

❑ Remove the high pressure pipe in question and discard it.

> Note:
> Make preparations for fuel outflow. Clean with new cloths.

❑ Fit the correct blanking plugs.

Removing the four high pressure pipes

❑

> Note:
> This procedure only applies if removing all the high pressure pipes and, after having removed them all, in preparation for refitting them.

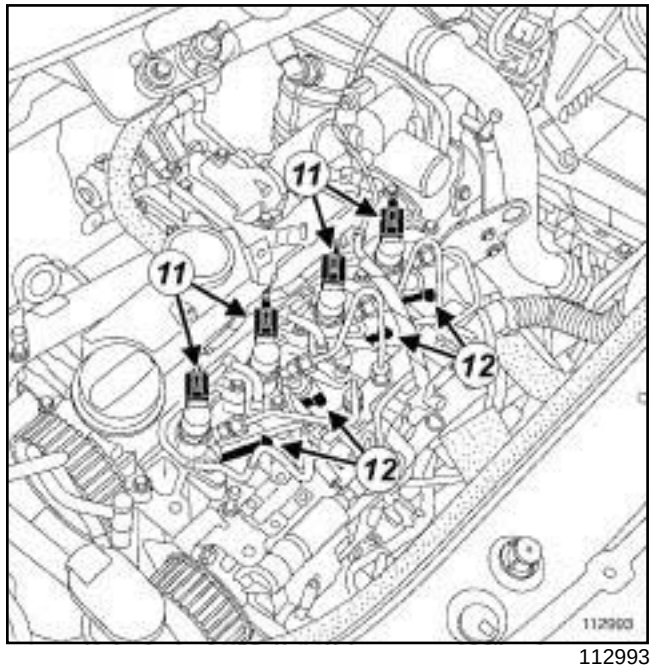

112993

❑ Disconnect:

- the connector (**11**) from the injectors,
- the connector (**12**) from the heater plugs.

K9K, and 732 or 734

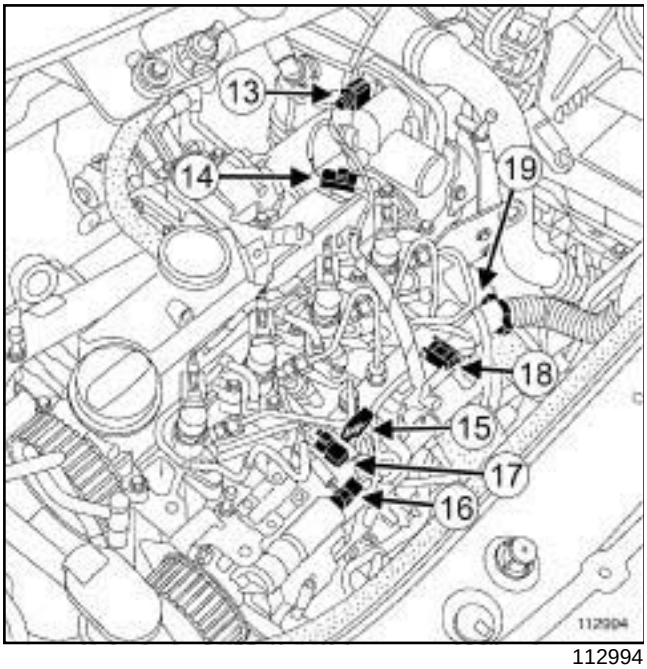

112994

- ❑ Disconnect:
  - the damper valve connector (**13**) ,
  - the connector (**14**) from the camshaft position sensor,
  - the pressure regulation solenoid valve connector (**15**) ,
  - the flow regulation solenoid valve connector (**16**) ,
  - the diesel temperature sensor connector (**17**) ,
  - the rail pressure sensor connector.
- ❑ Unclip the wiring harness clip (**18**) .
- ❑ Remove the wiring harness clip nut (**19**) .
- ❑ Move the wiring harness to one side.

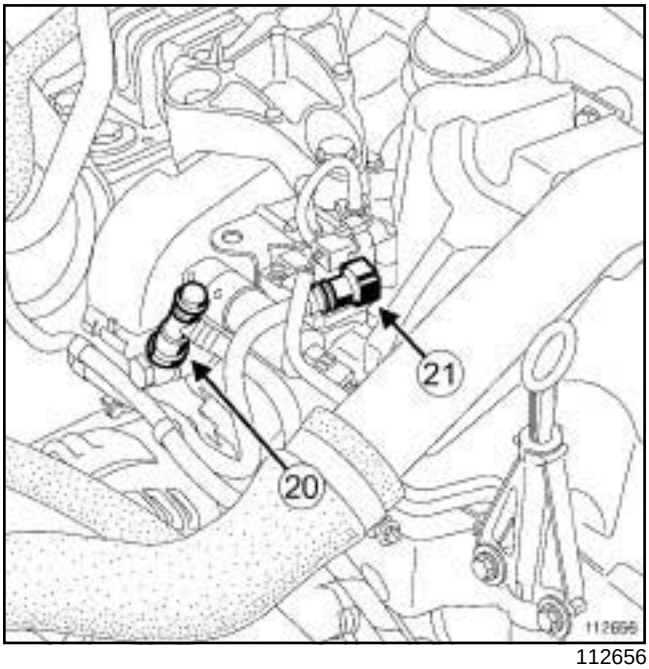

112656

- ❑ Protect the alternator from fuel outflow.
- ❑ Clean the unions on the fuel supply and return pipes (see **13B**, **Diesel injection**, **Diesel injection: Precautions for repair**, page **13B-12**) .
- ❑ Disconnect:
  - the fuel supply pipe (**20**) ,
  - the fuel return pipe (**21**) .

> Note:
>
> Make preparations for fuel outflow. Clean with new cloths.

- ❑ Fit the correct blanking plugs.

K9K, and 732 or 734

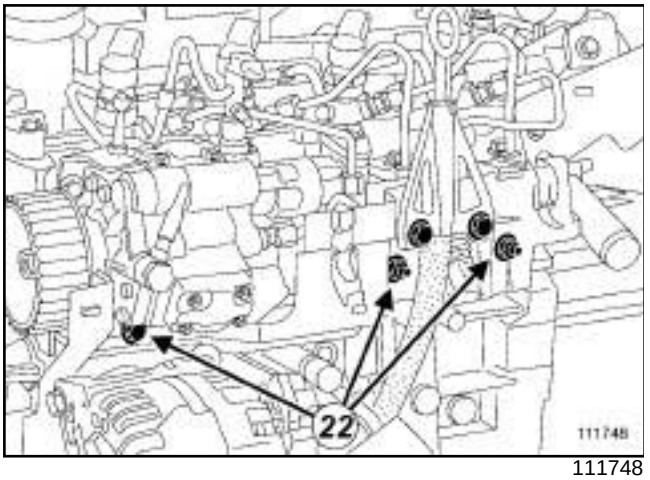

111748

❑ Unclip the diesel evacuation pipe.

❑ Remove:

- the injector rail protector mounting bolt and nuts (**22**) ,
- the injector rail protector support,
- the fuel supply and return pipes.

❑ Clean the unions (see **13B**, **Diesel injection**, **Diesel injection: Precautions for repair**, page **13B-12**) :

- of the fuel return pipe on the high-pressure pump and injector rail,
- on the high pressure pipe between the high pressure pump and the injector rail,

REFITTING

I - REFITTING PREPARATION OPERATION

❑ **parts always to be replaced: High-pressure pipe between the rail and injector (11,05,03,01)**

❑

> **WARNING**
> Only remove the blanking plugs immediately before connecting the fuel circuit pipes.
>
> The plugs are single-use. Do not reuse them; dispose of the whole set after use.

❑ Take the new high pressure pipe out of its plastic bag.

❑ Remove the blanking plugs.

II - REFITTING OPERATION FOR PART CONCERNED

❑ Fit the new high pressure pipe between the injector rail and the injector.

> Note:
>
> If the new pipes kit does not contain an applicator, do not lubricate the pipe threads (as they are self-lubricating pipes).

❑ Finger tighten the high pressure pipe nuts, starting with the one at the injector rail end.

1 - Refitting the four high pressure pipes

❑ Torque tighten the **injector rail nuts (28 N.m)**.

❑ Refit:

- the injector rail protector support,
- the injector rail protector support bolt and nuts.

❑ Clip the diesel evacuation pipe into place.

❑ Remove the blanking plugs.

❑ Connect:

- the fuel supply pipe,
- the fuel return pipe.

❑ Fit the wiring harness.

❑ Refit the wiring harness clip nut.

❑ Clip on the wiring harness clip.

❑ Connect:

- the rail pressure sensor connector,
- the diesel temperature sensor connector ,
- the flow regulation solenoid valve connector,
- the pressure regulation solenoid valve connector,
- the cylinder marking sensor connector,
- the damper valve connector,
- the heater plugs connector,
- the connector of the injectors.

2 - Yellow high pressure pipes

❑ Torque tighten the **yellow high pressure pipe nuts (24 N.m)** using the **(Mot. 1566)** or the **(Mot. 1746)** and starting with the injector rail end.

K9K, and 732 or 734

3 - Silver high pressure pipes

❑ Torque tighten the **silver high pressure pipe nuts (28 N.m)** using the **(Mot. 1566)** or the **(Mot. 1746)** and starting with the injector rail end.

III - FINAL OPERATION

❑ Refit:

- the dipstick duct bolts,
- the dipstick,
- the injector rail protector cover,
- the injector rail protector cover bolt and nut.

❑ Clip the injector rail protector cover into place.

❑ Refit the clip on the stainless steel pipe, if necessary.

❑ Clip the stainless steel pipe to the turbocharger.

❑ Refit:

- the stainless steel pipe bolts,
- the air inlet duct on the damper valve.

❑ Tighten the clip.

❑ Connect:

- the air inlet pressure sensor connector,
- the battery (see **Battery : Removal - Refitting**) (80A, Battery).

❑ Reprime the fuel circuit with the manual priming pump.

❑ Refit the engine covers.

❑ Using the **diagnostic tool**, clear any faults stored by the injection computer, before restarting the engine.

WARNING

Check that there are no diesel leaks:

- check the sealing after repair (see **13B**, **Diesel injection**, **High pressure pipe: Checking**, page **13B-157**) ,
- run the engine at idle speed,
- accelerate several times at no load,
- switch off the ignition,
- check that there are no diesel leaks.

❑ Use the **diagnostic tool** to check that there are no stored faults and clear them if necessary.

K9K, and 722 or 728 or 729

Essential special tooling	
Mot. 1746	Offset spanner for tightening high pressure pump pipes.

Essential equipment
diagnostic tool

Tightening torques ▽	
yellow high pressure pipe unions between the rail and the injector	**24 N.m**
silver high pressure pipe unions between the rail and the injector	**28 N.m**
injector rail neck nuts	**21 N.m**

IMPORTANT
To avoid all risk of damage to the systems, apply the safety and cleanliness instructions and operation recommendations before carrying out any repair (see **13B**, **Diesel injection**, **Diesel injection: Precautions for repair**, page **13B-12**) .

IMPORTANT

Before carrying out any work on the injection system, check using the **diagnostic tool** :

- that the injector rail is not under pressure,

- that the fuel temperature is not too high.

It is essential to respect the safety and cleanliness advice whenever work is carried out on this system.

Loosening a high pressure pipe union when the engine is running is prohibited.

WARNING
To prevent impurities from entering the circuit, place protective plugs on all fuel circuit components exposed to the open air.

WARNING

Torque tighten (**38 N.m**) the high pressure pipes on the « pump and rail » and « rail and injectors » with one of the following part numbers:

- **77 01 207 025**,

- **77 01 207 026**,

- **77 01 207 027**,

- **77 01 207 028**,

- **77 01 207 029**.

For high pressure pipes with different part numbers, tighten to a torque of **24 N.m**.

IMPORTANT
Wear leaktight gloves (Nitrile type) for this operation.

REMOVAL

I - REMOVAL PREPARATION OPERATION

❑ Disconnect the battery (see **Battery : Removal - Refitting**) (80A, Battery).

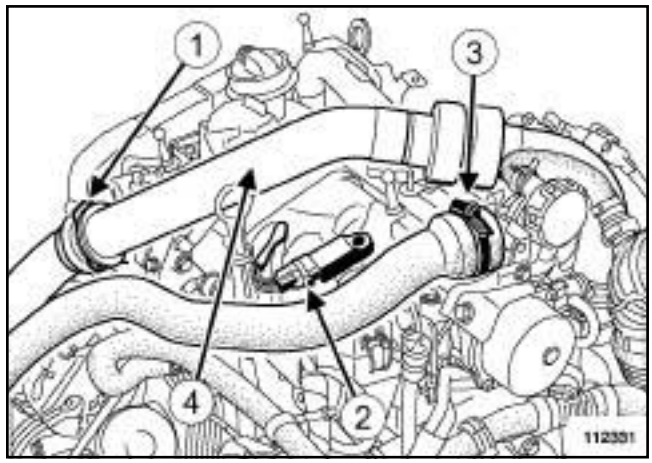

112331

❑ Remove the clip (**1**) of the turbocharging duct on the turbocharger.

❑ Remove the bolt from the duct on the cylinder head.

❑ Move the duct to one side.

❑ Disconnect the inlet air pressure sensor (**2**)

❑ Loosen the clip (**3**) and move the air inlet duct (**4**) to one side.

K9K, and 722 or 728 or 729

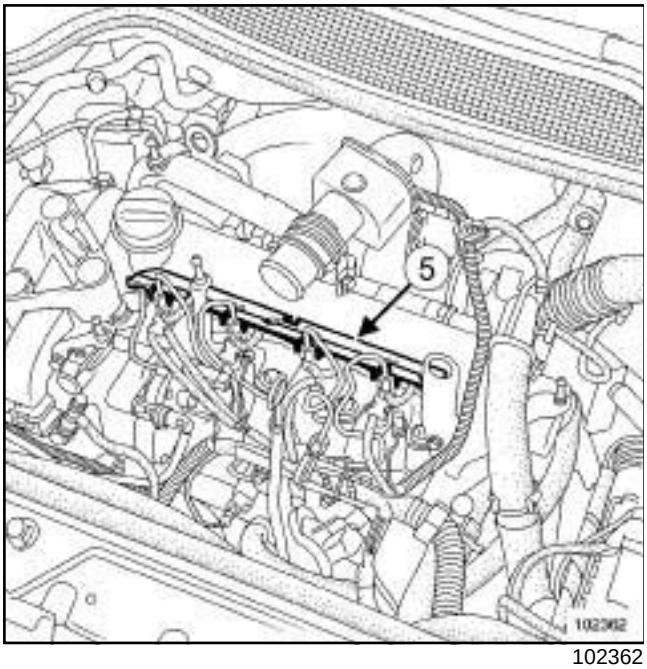

102362

❑ Remove the diesel fuel splash plate (**5**) .

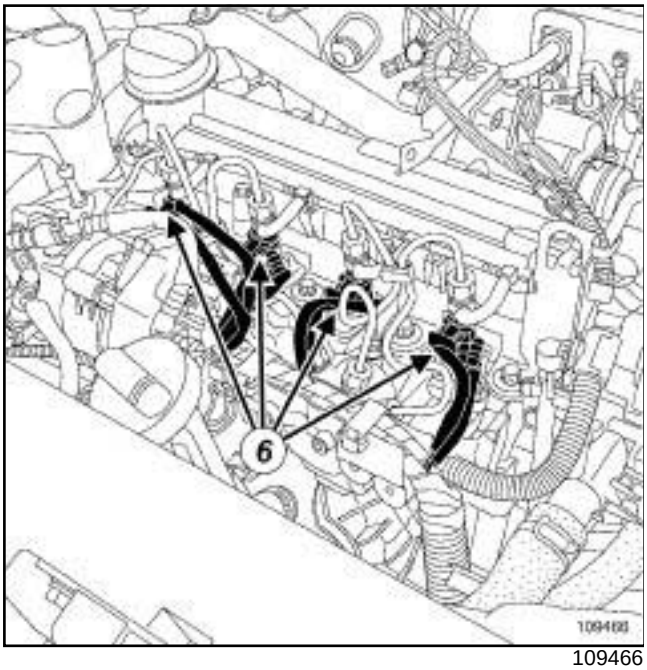

109466

❑ Disconnect the following connectors (**6**) :

- the heater plugs,
- the injectors.

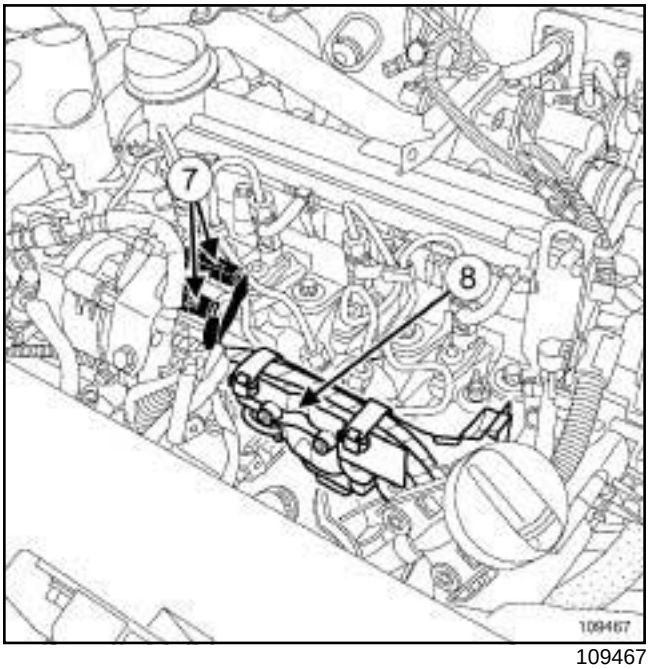

109467

❑ Disconnect the high pressure pump electrical connectors (**7**) .

❑ Remove the bolts mounting the neck (**8**) onto the spherical injector rail.

❑ Move the electric wiring and neck to the side as shown by the arrow.

❑ Loosen the injector rail nuts by several turns.

❑ Remove the clips connecting the high pressure pipes.

II - OPERATION FOR REMOVAL OF PART CONCERNED

❑ Clean the pipe(s) to be removed (see **13B**, **Diesel injection**, **Diesel injection: Precautions for repair**, page **13B-12**) .

❑ Undo:

- the high-pressure nut at the injector end,
- the high-pressure pipe nut at the injector rail end.

❑ Fit blanking plugs into the openings.

❑ Throw away the pipe.

REFITTING

I - REFITTING PREPARATION OPERATION

❑ **parts always to be replaced: High-pressure pipe between the rail and injector (11,05,03,01)**.

parts always to be replaced: high pressure pipe clip (11,05,03,19)

K9K, and 722 or 728 or 729

20960

❑

WARNING

Before fitting a new high pressure pipe, lightly lubricate the nut threads with oil from the applicator provided with the new part.

Be careful not to allow oil into the high pressure pipe.

Do not lubricate high pressure pipes supplied without an applicator, as these high pressure pipes are self-lubricating.

WARNING

Do not remove the blanking plug from each component until the last moment.

❑ If replacing the four high pressure pipes:

- remove the anti-splash cover mounting,
- loosen the injector rail nuts by a few turns (the injector rail should be loose).

II - REFITTING OPERATION FOR PART CONCERNED

❑ Remove the blanking plugs.

❑ Remove the new high pressure pipes between the rail and the injector from their packaging.

❑ Manually fit without tightening the high pressure pipe nuts between the rail and the injector, starting with the injector rail side.

❑ Using the **(Mot. 1746)**, tighten to torque:

- the **yellow high pressure pipe unions between the rail and the injector (24 N.m)**,
- the **silver high pressure pipe unions between the rail and the injector (28 N.m)**.

III - FINAL OPERATION

❑ Refit the neck on the injector rail.

❑ Torque tighten the **injector rail neck nuts (21 N.m)**.

❑ Connect the connectors of:

- on the accelerometer
- of the injectors,
- the heater plugs.

❑ Refit the air inlet duct.

❑ Tighten the air inlet duct clip.

❑ Connect the inlet air pressure sensor.

❑ Fit the turbocharger air duct.

❑ Clip the air duct between the turbocharger and the intercooler air inlet pipe.

❑ Tighten the bolt of the air duct on the rocker cover.

❑ Connect the battery (see **Battery : Removal - Refitting**) (80A, Battery).

❑ Prime the diesel circuit using the manual priming pump.

WARNING

Check that there are no diesel leaks:

- check the seal after repair,
- let the engine run at idle speed until the engine cooling fan starts to operate,
- accelerate several times at no load,
- switch off the ignition,
- confirm that there is no diesel fuel leakage.

M9R

Essential special tooling	
Mot. 1566	Spanner for removing high pressure pipes.
Mot. 1746	Offset spanner for tightening high pressure pump pipes.

Essential equipment
diagnostic tool

Tightening torques ▽	
nut at the injector end using prosteel spanner 77 11 223 720	**30 N.m**
nut at the rail end using prosteel spanner 77 11 223 720 or 77 11 223 721	**34 N.m**

IMPORTANT

Before carrying out any work on the injection system, check using the **diagnostic tool** :

- that the rail is not under pressure,

- that the fuel temperature is not too high.

Working on the circuit with the engine running is strictly forbidden.

IMPORTANT

To avoid all risk of damage to the systems, apply the safety and cleanliness instructions and operation recommendations before carrying out any repair (see **13B**, **Diesel injection**, **Diesel injection: Precautions for repair**, page **13B-12**) .

Note:

When replacing the five high pressure pipes, refer to the injector rail removal and refitting method (see **13B**, **Diesel injection**, **Injector rail: Removal - Refitting**, page **13B-204**) .

REMOVAL

I - REMOVAL PREPARATION OPERATION

❑ Remove the front engine cover.

❑ Disconnect the battery (see **Battery: Removal - Refitting**) (80A, Battery).

❑ Remove the injector rail protector (see **13B**, **Diesel injection**, **Injector rail protector: Removal - Refitting**, page **13B-154**) .

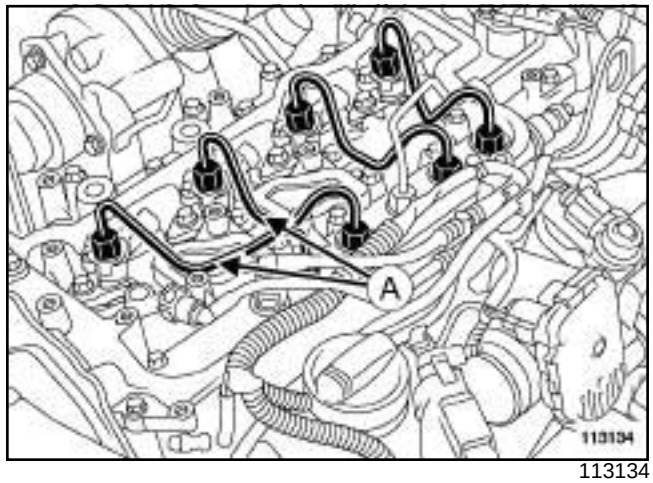

113134

❑ Remove:

- the oil separator (see **11A**, **Top and front of engine**, **Oil decanter: Removal - Refitting**, page **11A-301**) to remove the high pressure pipes (**A**) ,

- the diesel injector fuel return rail (see **13B**, **Diesel injection**, **Diesel injector fuel return rail: Removal - Refitting**, page **13B-148**) .

M9R

II - OPERATION FOR REMOVAL OF PART CONCERNED

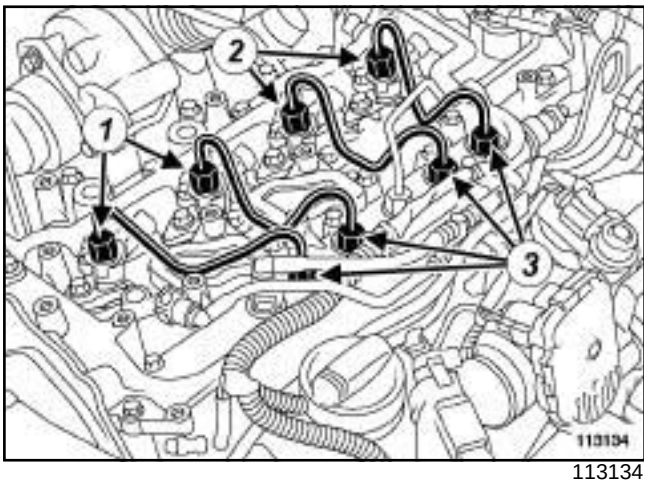

113134

❑ Undo:

- the nuts (**1**) on the high pressure pipe on the injector side using the **(Mot. 1566)**,
- the nuts (**2**) on the high pressure pipe on the injector side using the **(Mot. 1746)**,
- the nuts (**3**) on the high pressure pipe on the injector rail side using the **(Mot. 1566)**.

> Note:
>
> Loosen the nuts on the high pressure pipes, one pipe at a time.

❑ Remove high pressure pipes one by one.

> Note:
>
> Do not allow any diesel fuel to enter the engine via the rocker cover opening during this operation.

❑ Plug the openings.

REFITTING

I - REFITTING PREPARATION OPERATION

❑ **parts always to be replaced: High pressure pipe (11,05,03,03)**.

> **WARNING**
>
> Before fitting a new high pressure pipe, lightly lubricate the nut threads with the oil from the applicator provided in the new parts kit.
>
> Be careful not to allow oil into the high pressure pipe.
>
> Do not lubricate high pressure pipes supplied without an applicator, as these high pressure pipes are self-lubricating.

> **WARNING**
>
> Do not remove the blanking plugs from each component until the last moment.
>
> Also, do not remove the components from their packaging until they are to be fitted to the vehicle.

II - REFITTING OPERATION FOR PART CONCERNED

❑ Remove the blanking plugs from the openings.

❑ Refit a new high pressure pipe.

❑ Position:

- the high pressure pipe olive in the injector taper,
- the high pressure pipe olive into the injector rail outlet taper.

❑ Fit the high pressure pipe nuts without tightening them, starting with the nut at the injector rail end.

M9R

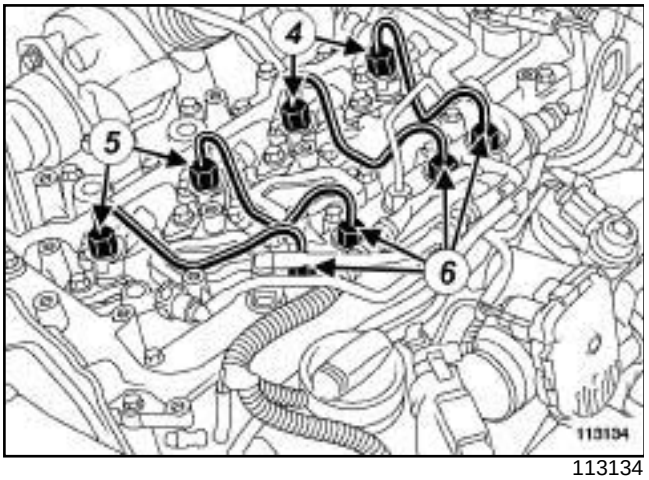

113134

❑ Tighten to torque and in order:

- the **nut at the injector end using prosteel spanner 77 11 223 720 (30 N.m)**,
- the **nut at the rail end using prosteel spanner 77 11 223 720 or 77 11 223 721 (34 N.m)**.

III - FINAL OPERATION

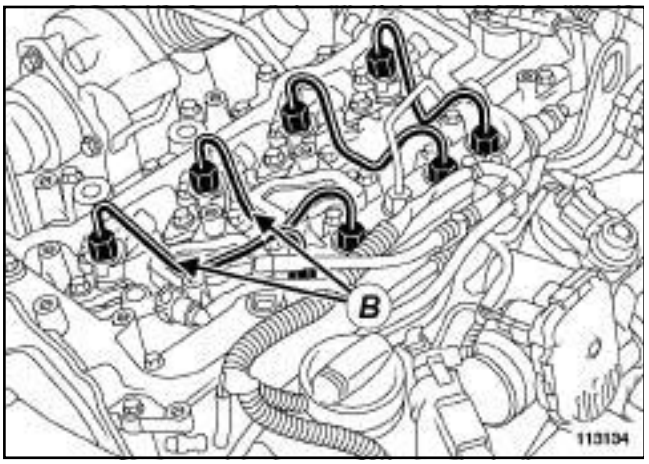

113134

❑ Refit:

- the diesel injector fuel return rail (see **13B**, **Diesel injection**, **Diesel injector fuel return rail: Removal - Refitting**, page **13B-148**) ,
- the oil separator (see **11A**, **Top and front of engine**, **Oil decanter: Removal - Refitting**, page **11A-301**) to refit the high pressure pipes (**B**) .

❑ Rotate the clip on the turbocharger air outlet pipe to refit the clip in its housing.

❑ Clip the air outlet pipe of the turbocharger to the turbocharger.

❑ Connect the battery (see **Battery : Removal - Refitting**) (80A, Battery).

❑ Using the **diagnostic tool**, run scenario **SC0035** (high pressure fuel circuit fault finding) when replacing or removing - refitting (see **Fault finding - Interpretation of commands**) (13B, Diesel injection).

❑ In the event of a leak, repair the part concerned.

❑ Disconnect the battery (see **Battery : Removal - Refitting**) (80A, Battery).

❑ Refit the injector rail protector (see **13B**, **Diesel injection**, **Injector rail protector: Removal - Refitting**, page **13B-154**) .

❑ Connect the battery (see **Battery : Removal - Refitting**) (80A, Battery).

❑ Refit the engine cover.

F9Q, and 800 or 803 or 804 or 808

Essential special tooling	
Mot. 1566	Spanner for removing high pressure pipes.

Essential equipment
diagnostic tool

Tightening torques ▽	
injector rail bolts	**25 Nm**
high pressure pipe nut on the injector rail (gold rail)	**29 Nm**
high pressure pipe nut on the injector rail (grey rail)	**37 Nm**
high pressure pipe nut on the injector side	**27 Nm**

IMPORTANT

Before carrying out any work on the injection system, check using the **diagnostic tool** :

- that the rail is not under pressure,

- that the fuel temperature is not too high.

Working on the circuit with the engine running is strictly forbidden.

IMPORTANT

Consult the safety and cleanliness advice and operation recommendations before carrying out any repair (see **13B**, **Diesel injection**, **Diesel injection: Precautions for repair**, page **13B-12**) .

REMOVAL

REMOVAL PREPARATION OPERATION

❑ Remove the front engine cover.

❑ Disconnect the battery (see **Battery: Removal - Refitting**) (MR 364, 80A, Battery).

❑ Remove:

- the air inlet duct (see **12A**, **Fuel mixture**, **Air inlet duct: Removal - Refitting**, page **12A-46**) ,
- the injector rail protector (see **13B**, **Diesel injection**, **Injector rail protector: Removal - Refitting**, page **13B-154**) .

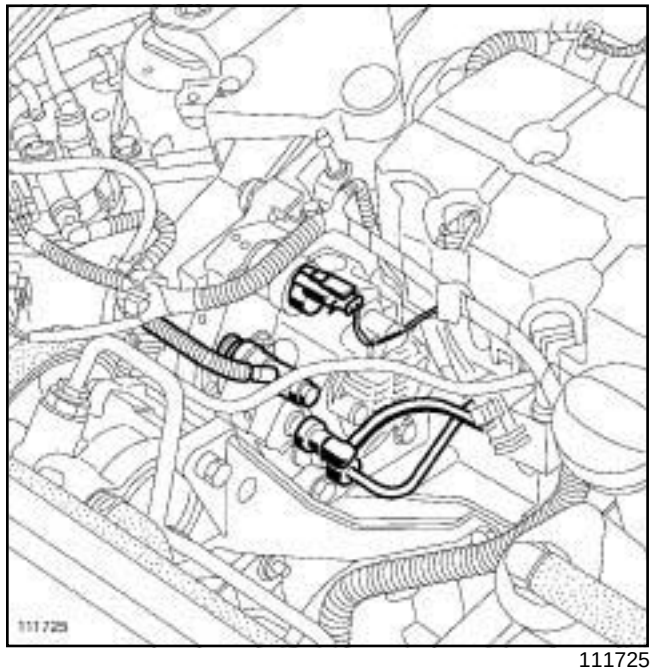

111725

❑ Disconnect the diesel return pipe union from the high-pressure pump.

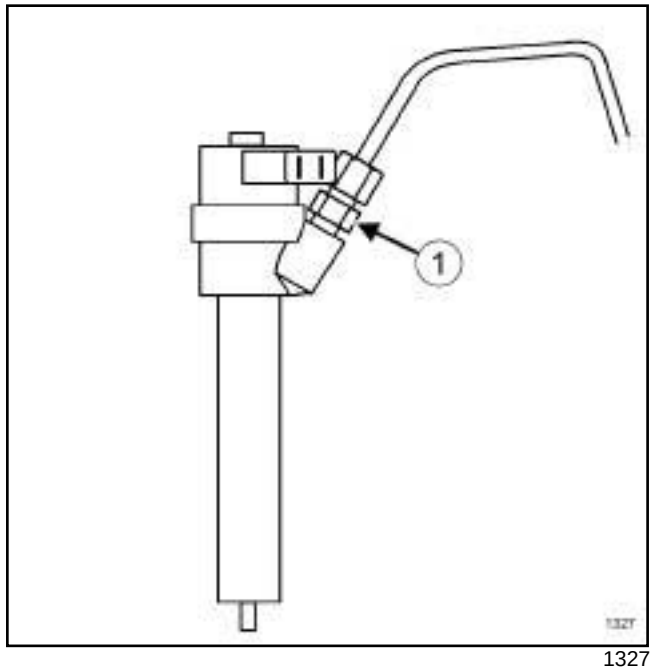

1327

❑ The injector intermediate union (**1**) must be held using a spanner while the high pressure pipes are loosened.

Do not damage the injector return nozzle.

❑ Undo:

- the high pressure pipe nut at the injector end using the **(Mot. 1566)**,

F9Q, and 800 or 803 or 804 or 808

- the high pressure pipe nut at the rail end using the **(Mot. 1566)**.

❏ Move the nuts along the tube, keeping the olive in contact with the taper.

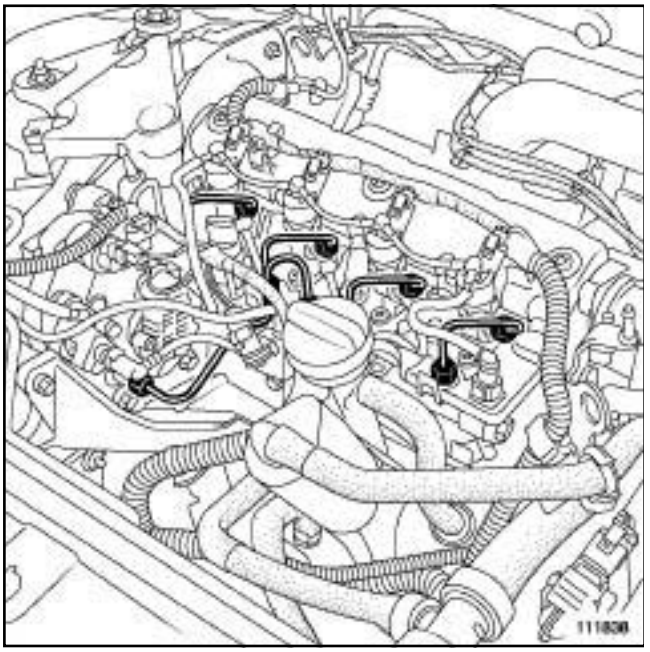

111838

❏ Remove the high pressure pipe.

❏ Place blanking plugs on the openings.

❏ If replacing all of the high pressure pipes, undo the injector rail bolts by a few turns.

REFITTING

I - REFITTING OPERATION FOR PART CONCERNED

❏ Remove the blanking plugs.

❏ Position:

- the high pressure pipe olive in the injector inlet taper,
- the high pressure pipe olive into the injector rail outlet taper.

❏ Without tightening, screw on the high pressure pipe nuts.

❏ If replacing all of the high pressure pipes, torque tighten the **injector rail bolts (25 Nm)**.

> Note:
>
> There are two types of injector rail which can be fitted to the engine. The two rails are made of different material and there is a specific tightening torque for the pipes on the rail. They are different colours:
>
> - gold rail,
> - or grey rail.

❏ Using the **(Mot. 1566)**, tighten to torque:

- the **high pressure pipe nut on the injector rail (gold rail) (29 Nm)**,
- the **high pressure pipe nut on the injector rail (grey rail) (37 Nm)**.

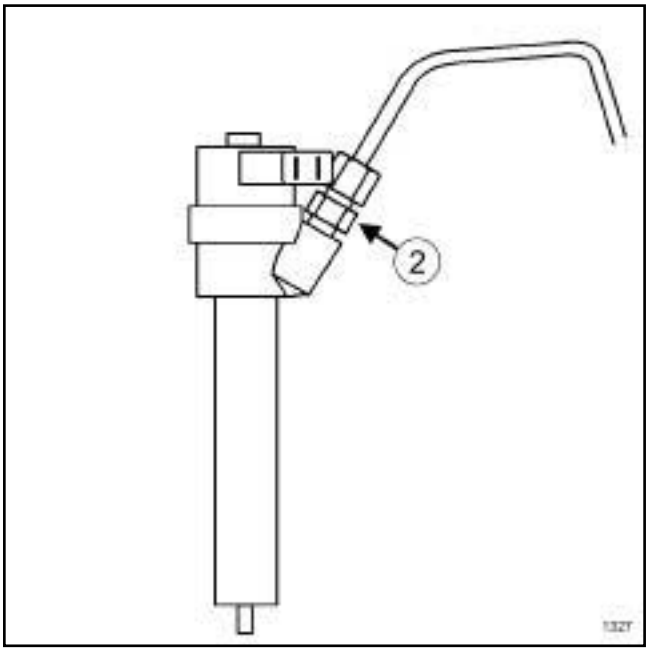

1327

❏ The injector intermediate union (**2**) must be held using a spanner while the high pressure pipes are tightened.

Do not damage the injector return nozzle.

❏ Using the **(Mot. 1566)**, torque tighten the **high pressure pipe nut on the injector side (27 Nm)**.

> Note:
>
> Tighten one pipe fully before moving on to the next pipe.

F9Q, and 800 or 803 or 804 or 808

II - FINAL OPERATION.

- ❑ Connect the diesel return pipe union to the high pressure pump.
- ❑ Refit the air inlet duct, with its old gaskets (see **12A**, **Fuel mixture**, **Air inlet duct: Removal - Refitting**, page **12A-46**) .
- ❑ Connect the battery (see **Battery : Removal - Refitting**) (MR 364, 80A, Battery).
- ❑ Start the engine and check that there are no leaks.
- ❑ Disconnect the battery (see **Battery: Removal - Refitting**) (MR 364, 80A, Battery).
- ❑ Remove the air inlet duct (see **12A**, **Fuel mixture**, **Air inlet duct: Removal - Refitting**, page **12A-46**) .
- ❑ Refit:
  - the injector rail protector (see **13B**, **Diesel injection**, **Injector rail protector: Removal - Refitting**, page **13B-154**) ,
  - the air inlet duct, with new gaskets (see **12A**, **Fuel mixture**, **Air inlet duct: Removal - Refitting**, page **12A-46**) .
- ❑ Connect the battery (see **Battery : Removal - Refitting**) (MR 364, 80A, Battery).
- ❑ Refit the engine cover.

F9Q, and 816 or 818

Essential special tooling	
Mot. 1566	Spanner for removing high pressure pipes.

Essential equipment
diagnostic tool

Tightening torques ▽	
injector rail bolts	**25 Nm**
high pressure pipe nut on the injector rail (gold rail)	**29 Nm**
high pressure pipe nut on the injector rail (grey rail)	**37 Nm**
high pressure pipe nut on the injector side	**27 Nm**

IMPORTANT

Before carrying out any work on the injection system, check using the **diagnostic tool** :

- that the rail is not under pressure,
- that the fuel temperature is not too high.

Working on the circuit with the engine running is strictly forbidden.

IMPORTANT

Consult the safety and cleanliness advice and operation recommendations before carrying out any repair (see **13B**, **Diesel injection**, **Diesel injection: Precautions for repair**, page **13B-12**) .

REMOVAL

REMOVAL PREPARATION OPERATION

❑ Remove the front engine cover.

❑ Disconnect the battery (see **Battery: Removal - Refitting**) (MR 364, 80A, Battery).

❑ Remove:

- the air inlet duct (see **12A**, **Fuel mixture**, **Air inlet duct: Removal - Refitting**, page **12A-46**) ,
- the injector rail protector (see **13B**, **Diesel injection**, **Injector rail protector: Removal - Refitting**, page **13B-154**) .

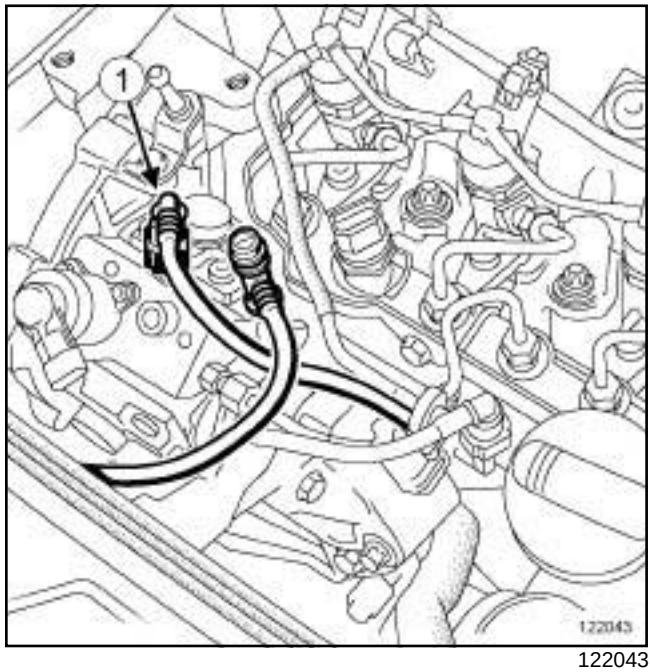

122043

❑ Disconnect the diesel return pipe union (**1**) on the high pressure pump.

F9Q, and 816 or 818

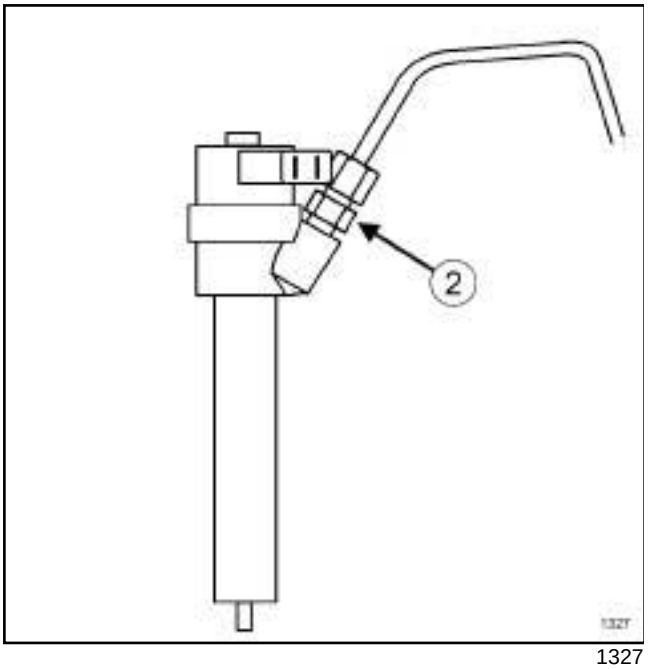

1327

- The injector intermediate union (**2**) must be held using a spanner while the high pressure pipes are loosened.
- Undo:
  - the high pressure pipe nut at the injector end using the **(Mot. 1566)**,
  - the high pressure pipe nut at the rail end using the **(Mot. 1566)**.
- Move the nuts along the tube, keeping the olive in contact with the taper.
- Remove the high pressure pipe.
- Place blanking plugs on the openings.
- If replacing all of the high pressure pipes, undo the injector rail bolts by a few turns.

REFITTING

I - REFITTING OPERATION FOR PART CONCERNED

-

> **WARNING**
> Do not remove the blanking plugs from each component until the last moment.
>
> Also, do not remove the components from their packaging until they are to be fitted to the vehicle.

Remove the blanking plugs.

- Position:
  - the high pressure pipe olive in the injector inlet taper,
  - the high pressure pipe olive into the injector rail outlet taper.
- Without tightening, screw on the high pressure pipe nuts.
- If replacing all of the high pressure pipes, torque tighten the **injector rail bolts (25 Nm)**.

> Note:
>
> There are two types of injector rail which can be fitted to the engine. The two rails are made of different material and there is a specific tightening torque for the pipes on the rail. They are different colours:
>
> - gold rail,
> - or grey rail.

- Using the **(Mot. 1566)**, tighten to torque:
  - the **high pressure pipe nut on the injector rail (gold rail) (29 Nm)**,
  - the **high pressure pipe nut on the injector rail (grey rail) (37 Nm)**.

F9Q, and 816 or 818

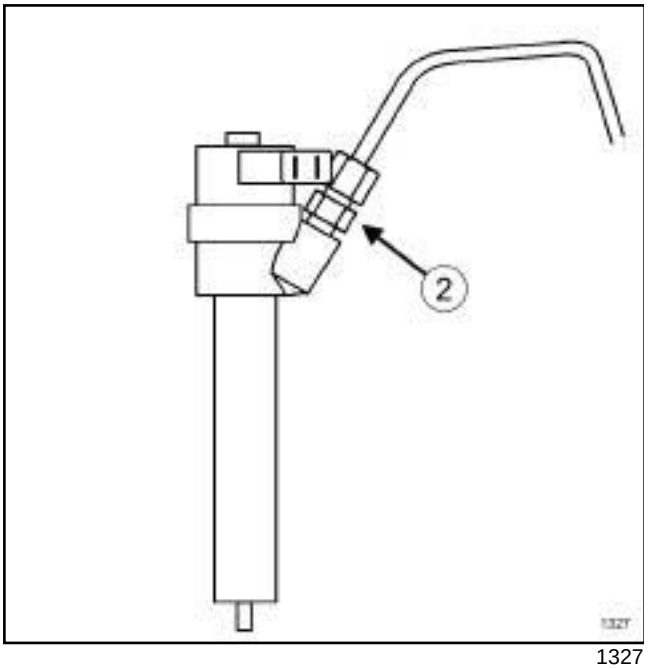

1327

- The injector intermediate union (**2**) must be held using a spanner while the high pressure pipes are tightened.
- Using the **(Mot. 1566)**, torque tighten the **high pressure pipe nut on the injector side (27 Nm)**.

> Note:
>
> Tighten one pipe fully before moving on to the next pipe.

II - FINAL OPERATION.

- Connect the diesel return pipe union to the high pressure pump.
- Refit the air inlet duct, with its old gaskets (see **12A**, **Fuel mixture**, **Air inlet duct: Removal - Refitting**, page **12A-46**) .
- Connect the battery (see **Battery : Removal - Refitting**) (MR 364, 80A, Battery).
- Start the engine and check that there are no leaks.
- Disconnect the battery (see **Battery: Removal - Refitting**) (MR 364, 80A, Battery).
- Remove the air inlet duct (see **12A**, **Fuel mixture**, **Air inlet duct: Removal - Refitting**, page **12A-46**) .
- Refit:
  - the injector rail protector (see **13B**, **Diesel injection**, **Injector rail protector: Removal - Refitting**, page **13B-154**) ,
  - the air inlet duct, with new gaskets (see **12A**, **Fuel mixture**, **Air inlet duct: Removal - Refitting**, page **12A-46**) .
- Connect the battery (see **Battery : Removal - Refitting**) (MR 364, 80A, Battery).
- Refit the engine cover.

K9K, and 724

Essential special tooling	
Mot. 1566	Spanner for removing high pressure pipes.
Mot. 1746	Offset spanner for tightening high pressure pump pipes.

Tightening torques ▽	
yellow high pressure pipe unions between the rail and the injector	**24 N.m**
silver high pressure pipe unions between the rail and the injector	**28 N.m**
injector rail nuts	**28 N.m**

IMPORTANT
To avoid all risk of damage to the systems, apply the safety and cleanliness instructions and operation recommendations before carrying out any repair (see **13B**, **Diesel injection**, **Diesel injection: Precautions for repair**, page **13B-12**) .

IMPORTANT
Wear leaktight gloves (Nitrile type) for this operation.

WARNING
To prevent impurities from entering the circuit, place protective plugs on all fuel circuit components exposed to the open air.

WARNING

Tighten to a torque of **38 N.m** the « pump-rail » and « rail-injector » high pressure pipes, part no.:

- **77 01 207 025**
- **77 01 207 026**
- **77 01 207 027**
- **77 01 207 028**
- **77 01 207 029**

For high pressure pipes with different part numbers, tighten to a torque of **24 N.m**.

REMOVAL

I - REMOVAL PREPARATION OPERATION

❑ Remove the front engine cover.

❑ Disconnect the battery (see **Battery: Removal - Refitting**) (80A, Battery).

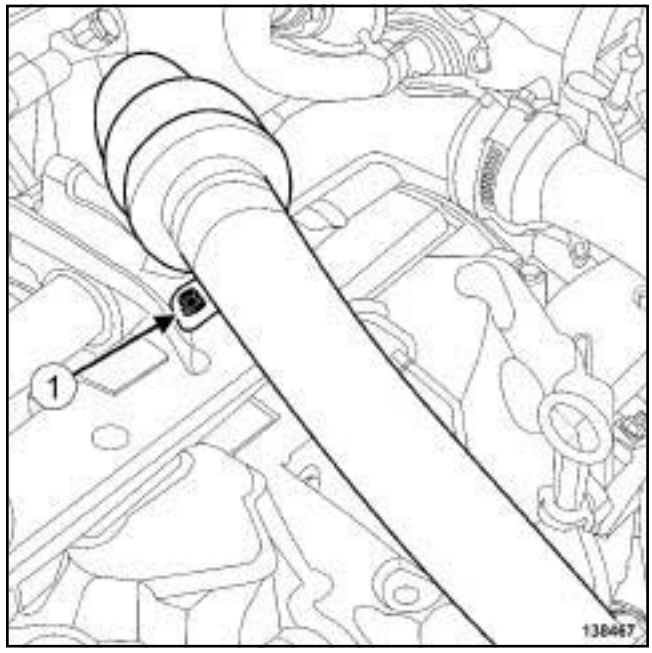

138467

❑ Remove the bolt (**1**) on the intercooler air inlet pipe.

K9K, and 724

123299

- ❑ Pull the clip (**2**) of the intercooler air inlet pipe.
- ❑ Disconnect the intercooler air inlet pipe from the turbocharger.
- ❑ Move aside the intercooler air inlet pipe.

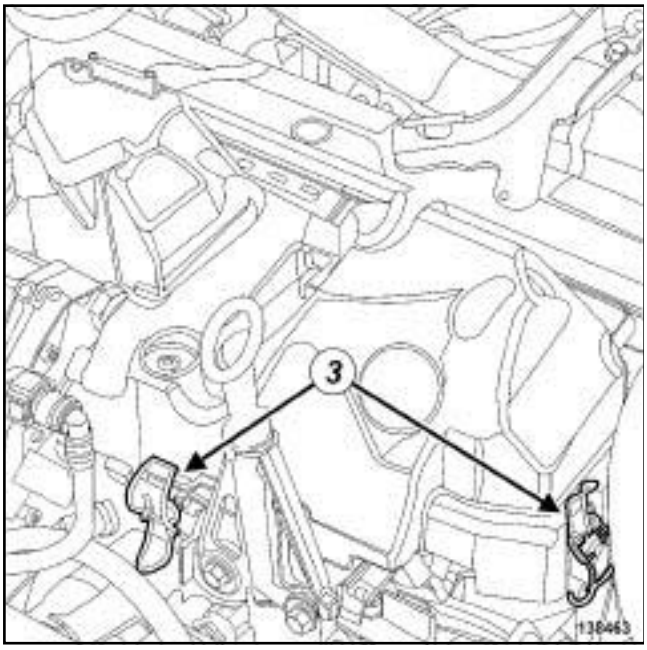

138463

- ❑ Unclip the rail protector cover at (**3**) .

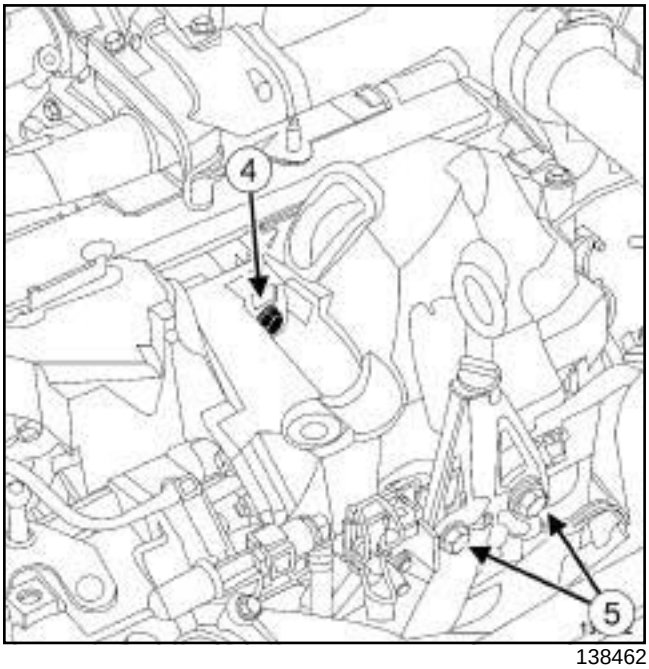

138462

- ❑ Remove:
  - the bolt (**4**) of the injector rail protector cover,
  - the injector rail protector cover,
  - the dipstick guide tube bolts (**5**) .
- ❑ Move aside the dipstick guide tube.
- ❑ Clean the high pressure pipe unions between the rail and the injectors (see **13B**, **Diesel injection**, **Diesel injection: Precautions for repair**, page **13B-12**) .

K9K, and 724

II - OPERATION FOR REMOVAL OF PART CONCERNED

1 - Removing one, two or three high pressure pipes

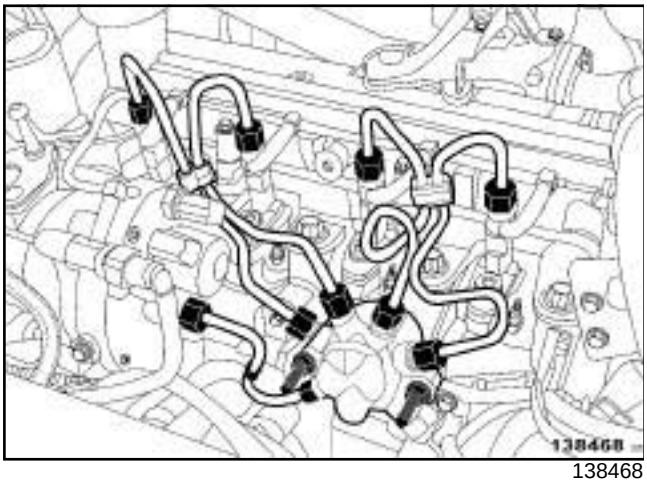

138468

❑

> **WARNING**
> Always hold the intermediate injector union in place with a wrench when loosening the high pressure pipes.
>
> Do not damage the injector return nozzle.

> **WARNING**
> To avoid any corrosion or damage, protect the areas on which fuel is likely to run.

❑ Undo the high pressure pipe nuts between the rail and the injector using the **(Mot. 1566)**.

❑ Remove:

- the high pressure pipe nut between the rail and the injector on the rail side,
- the nut for the high pressure pipe between the rail and the injector at the injector end,
- the high pressure pipe between the rail and the injector concerned.

❑ Fit suitable blanking plugs.

2 - Removing the four high pressure pipes

❑ Disconnect the heater plug connectors.

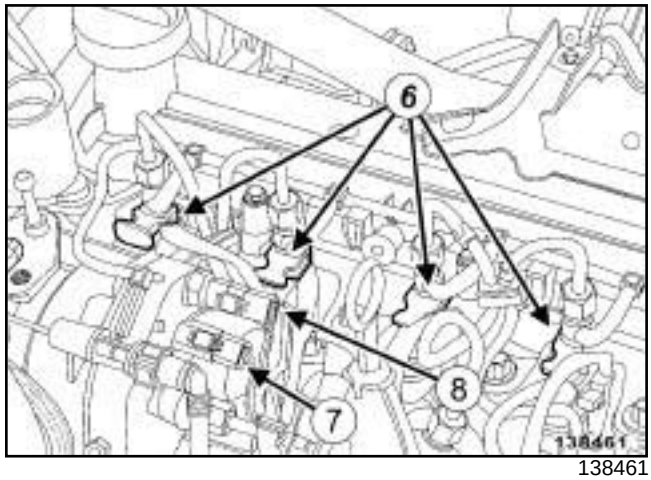

138461

❑ Disconnect:

- the diesel injector connectors (**6**) ,
- the flow actuator connector (**7**) ,
- the fuel temperature sensor connector (**8**) .

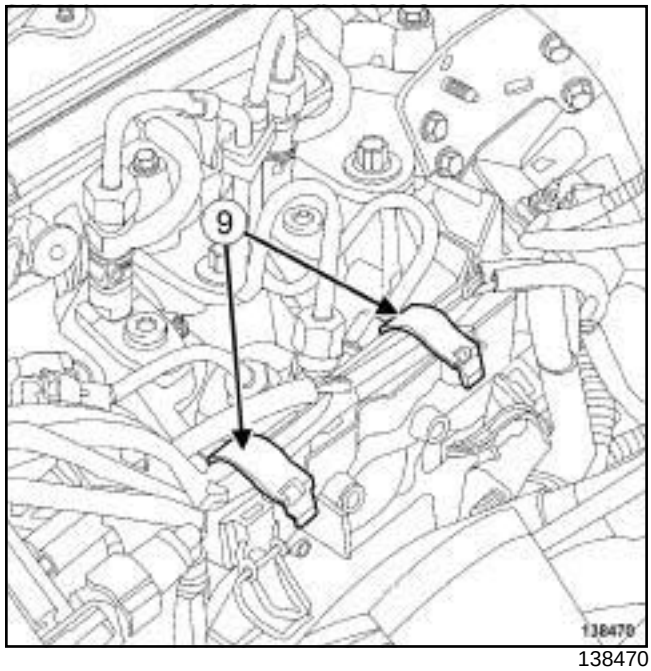

138470

❑ Unclip the injection wiring clips (**9**) .

❑ Move aside the rail protector injection wiring.

K9K, and 724

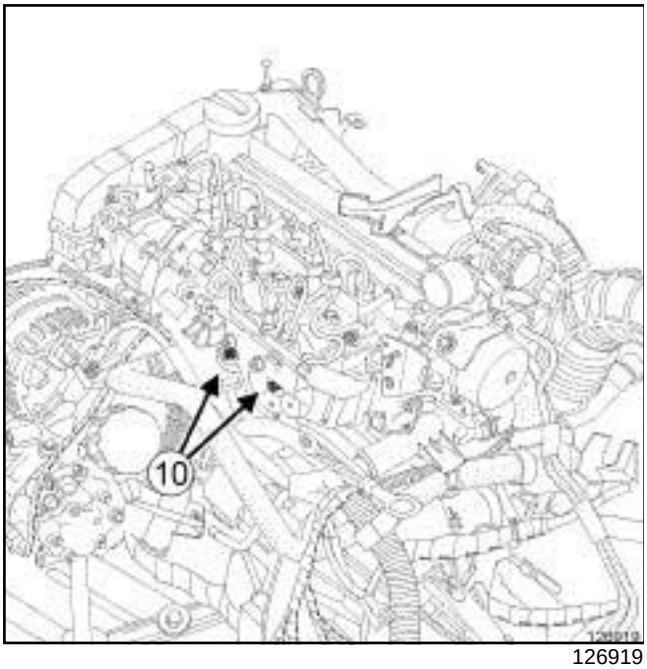

126919

❑ Remove:

- the nuts (**10**) from the injector rail protector,
- the injector rail protector.

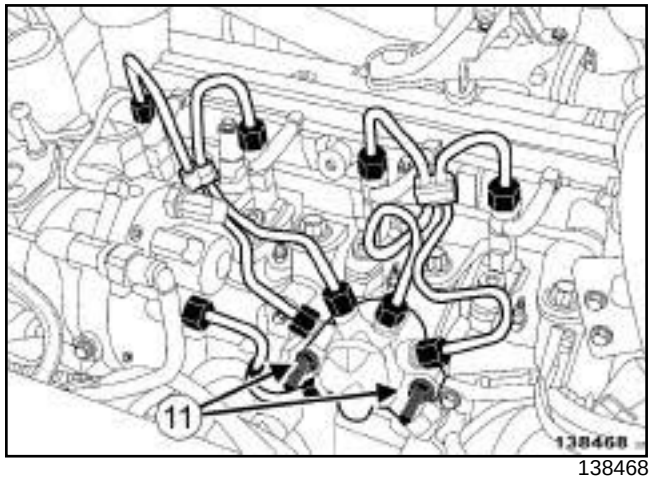

138468

❑ Loosen the injector rail nuts (**11**) by a few turns.

WARNING

Always hold the intermediate injector union in place with a wrench when loosening the high pressure pipes.

Do not damage the injector return nozzle.

WARNING

To avoid any corrosion or damage, protect the areas on which fuel is likely to run.

❑ Undo the high pressure pipe nuts between the rail and the injector using the **(Mot. 1566)**.

❑ Remove:

- the high pressure pipe nuts between the rail and the injector on the rail side,
- the high pressure pipe nuts between the rail and the injector on the injector side,
- the high pressure pipes between the rail and the injector.

❑ Insert the correct blanking plugs.

REFITTING

I - REFITTING PREPARATION OPERATION

❑ **parts always to be replaced: High-pressure pipe between the rail and injector (11,05,03,01)**

K9K, and 724

20960

❑

> **WARNING**
> Do not remove the blanking plugs from each component until the last moment.
>
> Also, do not remove the components from their packaging until they are to be fitted to the vehicle.

II - REFITTING OPERATION FOR PART CONCERNED

1 - Refitting one, two or three high pressure pipes

❑ Remove and then dispose of the blanking plugs.

❑ Remove the high pressure pipe between the rail and the injector from its packaging.

❑ Manually fit without tightening the high pressure pipe nuts between the rail and the injector, starting with the injector rail side.

❑ Using the **(Mot. 1746)**, tighten to torque:

- the **yellow high pressure pipe unions between the rail and the injector (24 N.m)**,
- the **silver high pressure pipe unions between the rail and the injector (28 N.m)**.

2 - Refitting the four high pressure pipes

❑ Remove and then dispose of the blanking plugs.

❑ Remove the new high pressure pipes between the rail and the injector from their packaging.

❑ Manually fit without tightening the high pressure pipe nuts between the rail and the injector, starting with the injector rail side.

❑ Torque tighten:

- the **yellow high pressure pipe unions between the rail and the injector (24 N.m)** using the tool **(Mot. 1746)**,
- the **silver high pressure pipe unions between the rail and the injector (28 N.m)** using the tool **(Mot. 1746)**,
- the **injector rail nuts (28 N.m)**.

❑ Refit the injector rail protector.

❑ Fit the injection wiring on the injector rail protector.

❑ Clip on the injection wiring clips.

❑ Connect:

- the fuel temperature sensor connector,
- the fuel flow actuator connector,
- the diesel injector connectors,
- the heater plug connectors.

III - FINAL OPERATION

❑ Refit:

- dipstick guide ,
- the injector rail protector cover,
- the intercooler air inlet pipe.

❑ Connect the intercooler air inlet pipe on the turbocharger.

❑ Fit the clip of the intercooler air inlet pipe on the turbocharger.

❑ Refit the bolt on the intercooler air inlet pipe.

❑ Connect the battery (see **Battery : Removal - Refitting**) (80A, Battery).

❑ Reprime the fuel circuit using the manual priming pump.

❑ Check that there are no diesel leaks (see **13B**, **Diesel injection**, **Diesel injector: check**, page **13B-281**)

❑ Refit the engine cover.

Injector rail: Removal - Refitting

K9K, and 722 or 728 or 729

Essential special tooling	
Mot. 1746	Offset spanner for tightening high pressure pump pipes.
Mot. 1566	Spanner for removing high pressure pipes.

Essential equipment
diagnostic tool

Tightening torques ▽	
injector rail mounting nuts	**28 N.m**
high pressure pipe nuts between the injector rail and the injectors	**24 N.m**
high pressure pipe nuts between the injector rail and the high pressure pump	**24 N.m**

WARNING

Before starting work on the vehicle, make sure you have:

- a new blanking plug kit (**PART NO. 77 01 206 804**),
- cleaning cloths (**PART NO.77 11 211 707**),
- cleaning product (**PART NO. 77 11 224 188**).

WARNING

Parts always to be replaced:

- all the high pressure pipes which have been removed.

WARNING

Torque tighten (**38 N.m**) the high pressure pipes on the « pump and rail » and « rail and injectors » with one of the following part numbers:

- **77 01 207 025**,
- **77 01 207 026**,
- **77 01 207 027**,
- **77 01 207 028**,
- **77 01 207 029**.

For high pressure pipes with different part numbers, tighten to a torque of **24 N.m**.

REMOVAL

I - REMOVAL PREPARATION OPERATION

❑ Position the vehicle on a lift (see **Vehicle: Towing and lifting**) (02A, Lifting equipment).

❑ Always read the repair precautions before carrying out any work (see **13B**, **Diesel injection**, **Diesel injection: Precautions for repair**, page **13B-12**) .

❑ Switch off the ignition and wait **30 seconds** before starting work on the injection system.

❑

WARNING

Before carrying out any work on the injection system, check using the **diagnostic tool** :

- that the rail is not under pressure,
- that the fuel temperature is not too high.

❑ Disconnect the battery (see **Battery: Removal - Refitting**) (80A, Battery).

❑ Remove the engine protector.

K9K, and 722 or 728 or 729

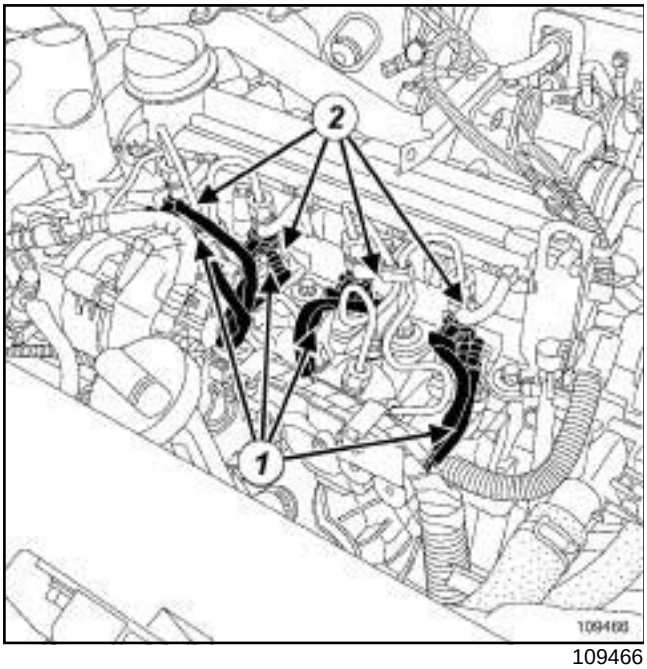

109466

❑ Disconnect the connectors from the injectors (**1**) and the heater plugs (**2**) .

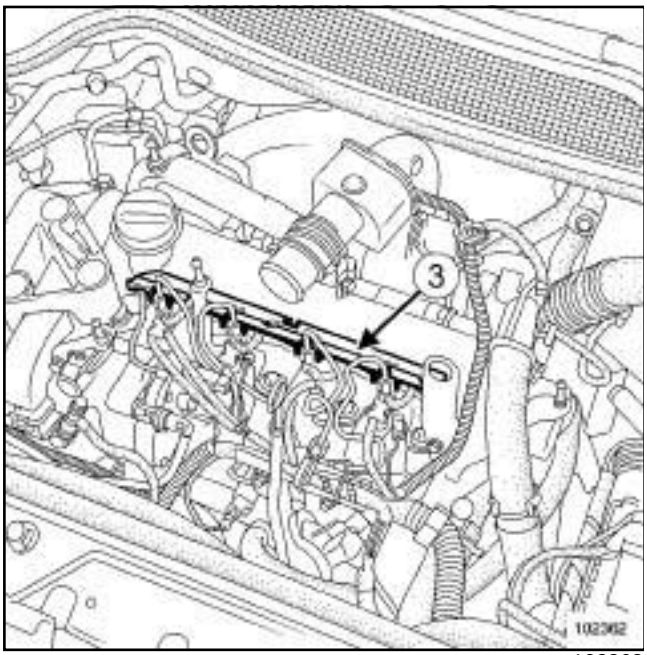

102362

❑ Remove the diesel fuel splash cover (**3**) .

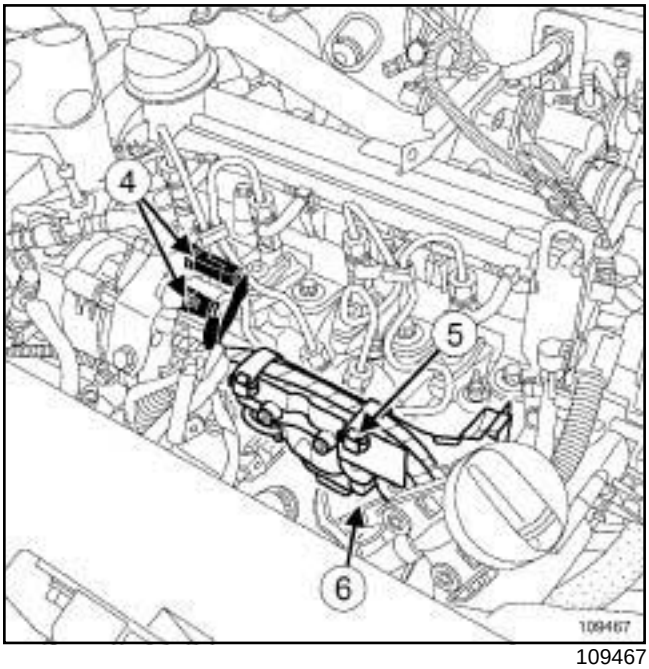

109467

❑ Disconnect:

- the connectors (**4**) from the fuel flow actuator and the diesel temperature sensor,
- the spherical rail pressure sensor (**5**) .

❑ Move the electric wiring harness and neck to the side as shown by the arrow.

❑ Remove the mountings from the neck (**6**) fixed on the spherical rail.

❑ Protect the alternator from fuel outflow.

❑ Clean the high pressure pipes (see **13B**, **Diesel injection**, **Diesel injection: Precautions for repair**, page **13B-12**) .

WARNING

To prevent impurities from entering, once the fuel circuit is opened, it must not be blasted with compressed air. Use cloths if necessary.

K9K, and 722 or 728 or 729

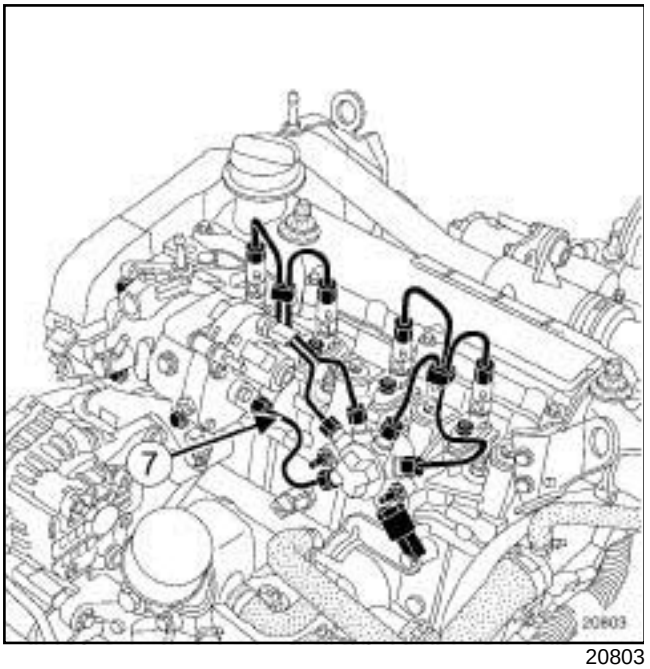

20803

❑ Remove the clips between the high pressure pipes.

❑ Loosen the nuts securing the high-pressure pipes between the injector rail and the injector.

❑ Remove the four high pressure pipes and discard.

> Note:
>
> Make preparations for fuel outflow. Clean with new cloths.

❑ Insert the blanking plugs.

❑ Remove the high pressure pipe between the high pressure pump and the injector rail (**7**) .

> Note:
>
> Make preparations for fuel outflow. Clean with new cloths.

❑ Insert the blanking plugs.

II - OPERATION FOR REMOVAL OF PART CONCERNED

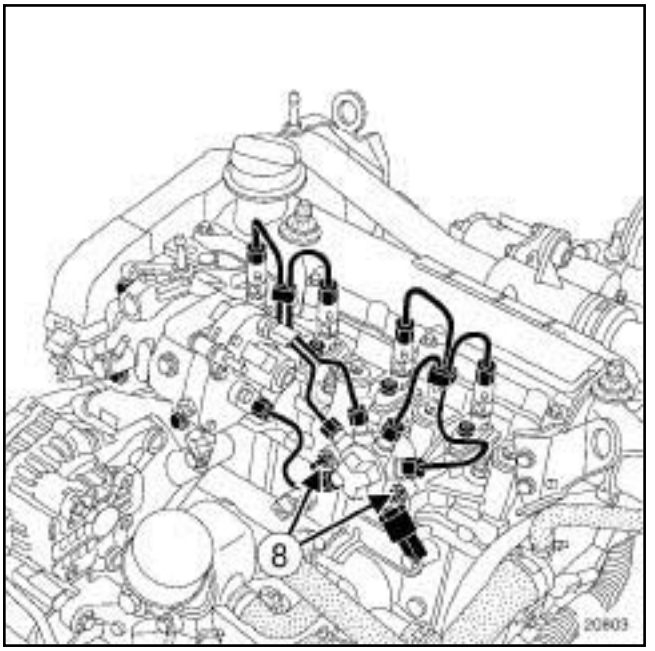

20803

❑ Remove:

- the injector rail mounting nuts (**8**) ,

- the injector rail.

> **WARNING**
>
> If the injector rail is to be reused, keep it in a sealed plastic bag all the time it is disconnected.

REFITTING

I - REFITTING PREPARATION OPERATION

❑

> **WARNING**
>
> Only remove the blanking plugs immediately before connecting the fuel circuit pipes.
>
> The plugs are single-use. Do not reuse them and throw away the complete kit after opening.

❑ Take the injector rail out of its plastic bag.

> **WARNING**
>
> If an injector rail is being replaced, only remove the new one from its original packaging when it is about to be fitted.

K9K, and 722 or 728 or 729

II - REFITTING OPERATION FOR PART CONCERNED

❏ Fit the injector rail.

❏ Tighten the injector rail mounting bolts (the injector rail should be loose).

III - FINAL OPERATION

❏ Remove the blanking plugs from:

- the high pressure pump,
- from the fuel inlet port of the injector rail.

❏ Fit a new high-pressure pipe between the injection rail and the high-pressure pump.

> Note:
>
> If the new pipe kit does not contain an applicator, lubrication of the pipe threads will be unnecessary (as they are self-lubricating pipes).

❏ Finger tighten the high-pressure pipe nuts until they make contact.

❏ Remove the blanking plugs from:

- from the fuel outlet ports of the injector rail,
- from the fuel inlet of the injector.

❏ Fit the new high-pressure pipes between the rail and the injectors.

> Note:
>
> If the new pipe kit does not contain an applicator, lubrication of the pipe threads will be unnecessary (as they are self-lubricating pipes).

❏ Finger tighten the high-pressure pipe nuts until they make contact.

❏ Torque tighten:

- the **injector rail mounting nuts (28 N.m)**,
- the **high pressure pipe nuts between the injector rail and the injectors (24 N.m)** using the **(Mot. 1746)** or **(Mot. 1566)**, starting on the injector side,
- the **high pressure pipe nuts between the injector rail and the high pressure pump (24 N.m)** using the **(Mot. 1746)** or **(Mot. 1566)**, starting on the high pressure pump side.

❏ Refit:

- the wiring harness with the neck,
- the neck mountings.

❏ Connect the electrical connectors.

❏ Reprime the fuel circuit.

❏ Connect the battery (see **Battery : Removal - Refitting**) (80A, Battery).

❏ Check that there are no diesel leaks:

- check the sealing after repair (see **13B**, **Diesel injection**, **Diesel injection: Precautions for repair**, page **13B-12**) ,
- let the engine run at idle speed until the engine cooling fan starts to operate,
- accelerate several times at no load,
- check that there are no diesel leaks.

❏ Use the **diagnostic tool** to check for stored faults. Clear them if necessary.

Injector rail: Removal - Refitting

B84 or C84 or G84 or S84, and K9K, and 732 or 734

Essential special tooling	
Mot. 1566	Spanner for removing high pressure pipes.
Mot. 1746	Offset spanner for tightening high pressure pump pipes.

Essential equipment
diagnostic tool

Tightening torques ▽	
injector rail mounting nuts	**28 Nm**
high pressure pipe nuts between the injector rail and the injectors	**24 Nm**
high pressure pipe nuts between the injector rail and the high pressure pump	**24 Nm**
air inlet duct clip	**5.5 Nm**

WARNING

Before starting work on the vehicle, obtain:

- a new plug kit **(part no. 77 01 476 857)**,
- some cleaning cloths **(part no. 77 11 211 707)**,
- cleaning product **(part no. 77 11 224 188)**.

WARNING

Parts always to be replaced:

- all the high pressure pipes which have been removed.

IMPORTANT

Before carrying out any work on the injection system, check using the **diagnostic tool** :

- that the rail is not under pressure,
- that the fuel temperature is not too high.

Working on the circuit with the engine running is strictly forbidden.

IMPORTANT

Consult the safety and cleanliness advice and operation recommendations before carrying out any repair (see **13B**, **Diesel injection**, **Diesel injection: Precautions for repair**, page **13B-12**) .

REMOVAL

I - REMOVAL PREPARATION OPERATION

❑ Switch off the ignition and wait **30 seconds** before starting work on the injection system.

❑ Remove the engine covers

❑ Disconnect the battery (see **Battery : Removal - Refitting**) (MR 364, 80A, Battery).

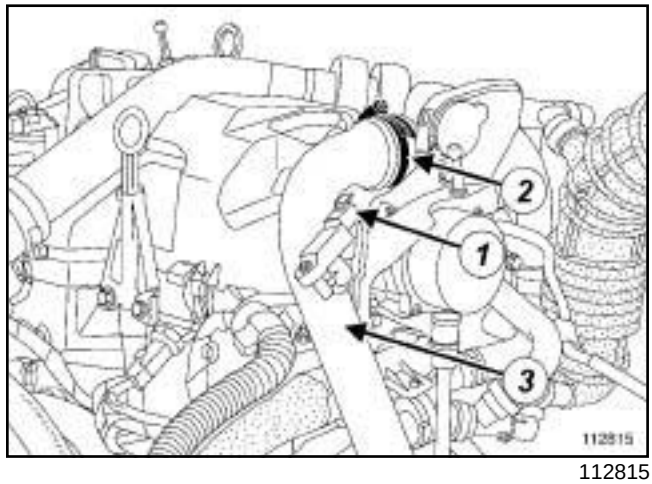

112815

❑ Disconnect the connector (**1**) from the inlet air pressure sensor.

❑ Loosen the clip (**2**) and move the air inlet manifold to one side (**3**) .

B84 or C84 or G84 or S84, and K9K, and 732 or 734

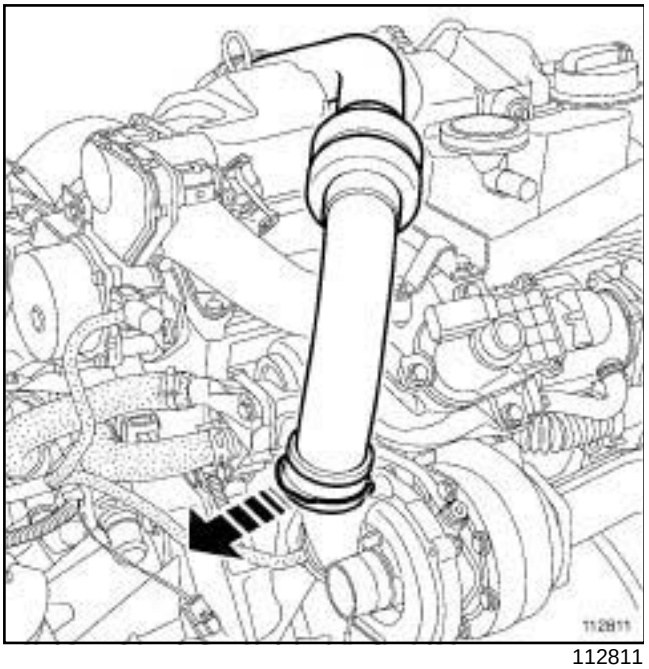

112811

❑ Pull the clip.

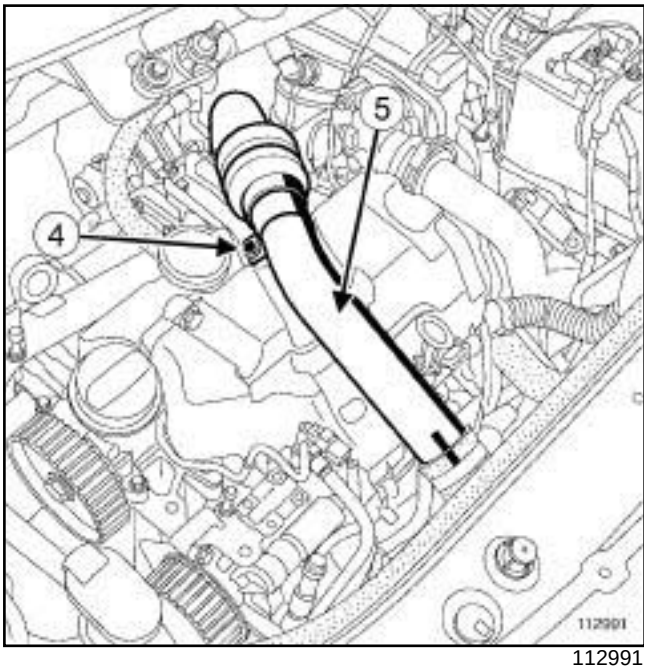

112991

❑ Remove the stainless steel pipe bolt (**4**)

❑ Remove the air inlet duct.

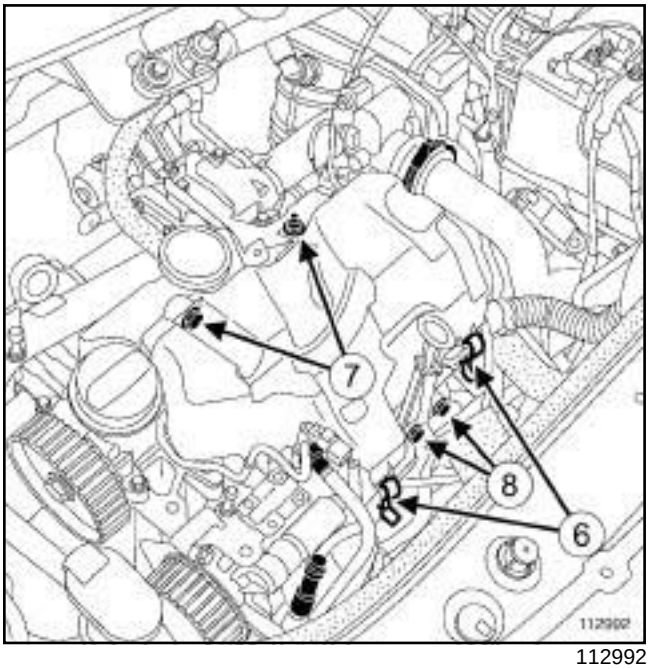

112992

❑ Unclip injector rail protector cover (**6**) .

❑ Remove:

- the injector rail protector cover bolt and nut (**7**) ,
- the injector rail protector cover,
- the dipstick,
- the dipstick duct bolts (**8**) .

❑ Move the dipstick duct to one side.

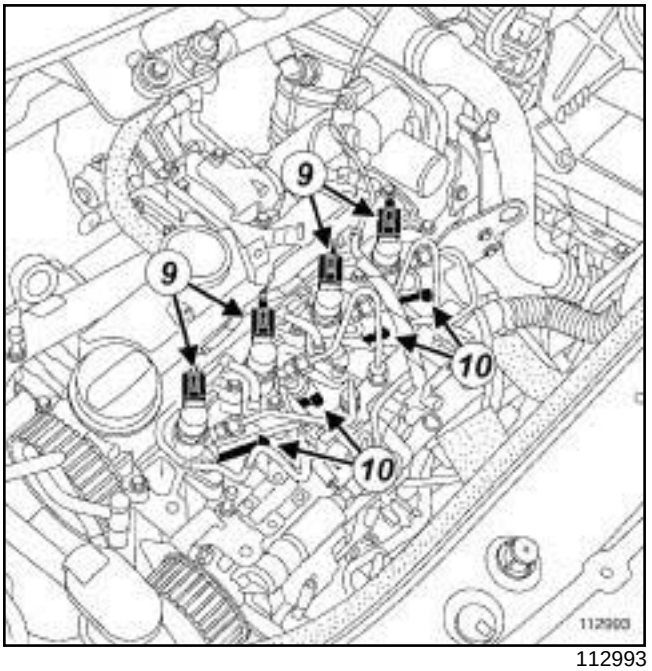

112993

❑ Disconnect:

- the connector (**9**) from the injectors,

B84 or C84 or G84 or S84, and K9K, and 732 or 734

- the connector (**10**) from the heater plugs.

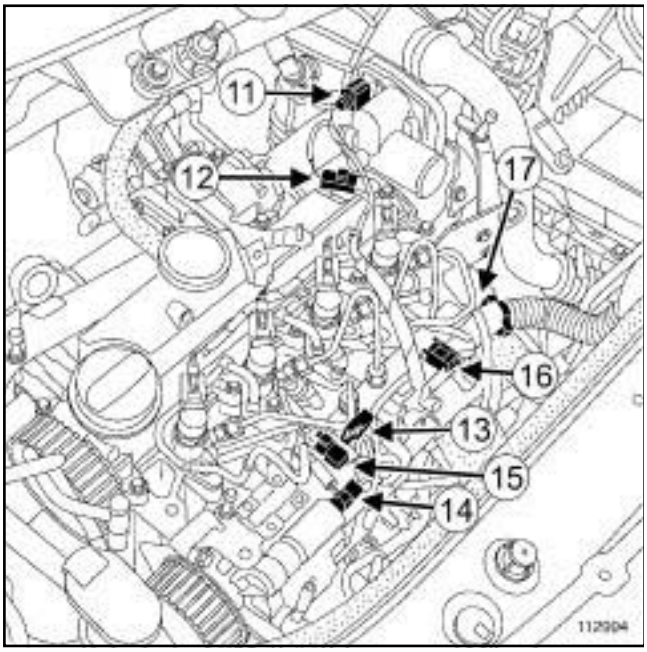

112994

❑ Disconnect:

- the damper valve connector (**11**) ,
- the camshaft position sensor connector (**12**) ,
- the pressure regulation solenoid valve connector (**13**) ,
- the flow regulation solenoid valve connector (**14**) ,
- the diesel temperature sensor connector (**15**) ,
- the rail pressure sensor connector.

❑ Unclip the wiring harness clip (**16**) .

❑ Remove the wiring harness clip nut (**17**) .

❑ Move the wiring harness to one side.

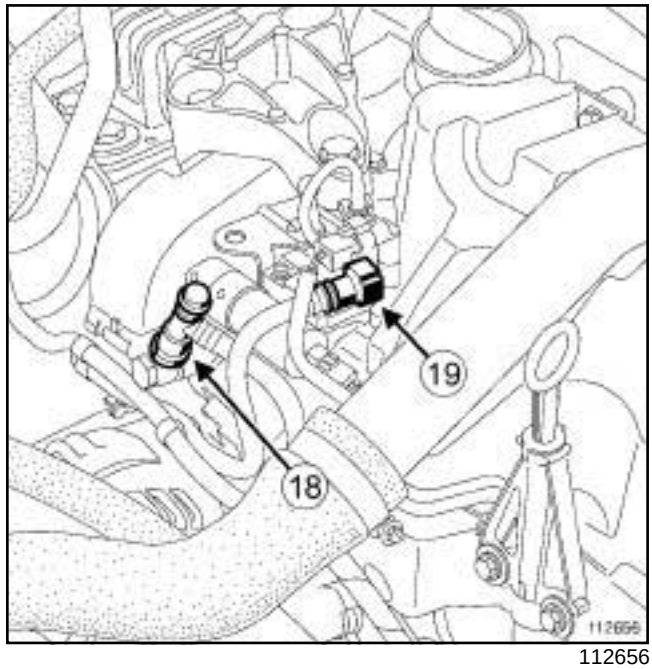

112656

❑ Protect the alternator from fuel outflow.

❑ Clean (see **13B**, **Diesel injection**, **Diesel injection: Precautions for repair**, page **13B-12**) :

- the fuel supply pipe (**18**) ,
- the fuel return pipe (**19**) .

❑ Disconnect:

- the fuel supply pipe (**18**) ,
- the fuel return pipe (**19**) .

> Note:
>
> Make preparations for fuel outflow. Clean with new wipes.

❑ Fit the correct blanking plugs.

B84 or C84 or G84 or S84, and K9K, and 732 or 734

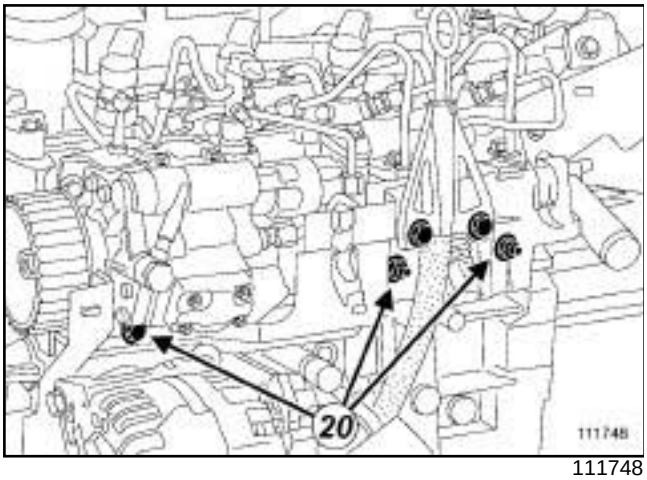

111748

❑ Unclip the diesel evacuation pipe.

❑ Remove:

- the injector rail protector support bolt and nuts,
- the injector rail protector support.

❑ Clean (see **13B**, **Diesel injection**, **Diesel injection: Precautions for repair**, page **13B-12**) :

- the high pressure pipes between the injector rail and the injectors,
- the high pressure pipes (**19**) between the high pressure pump and the injector rail.

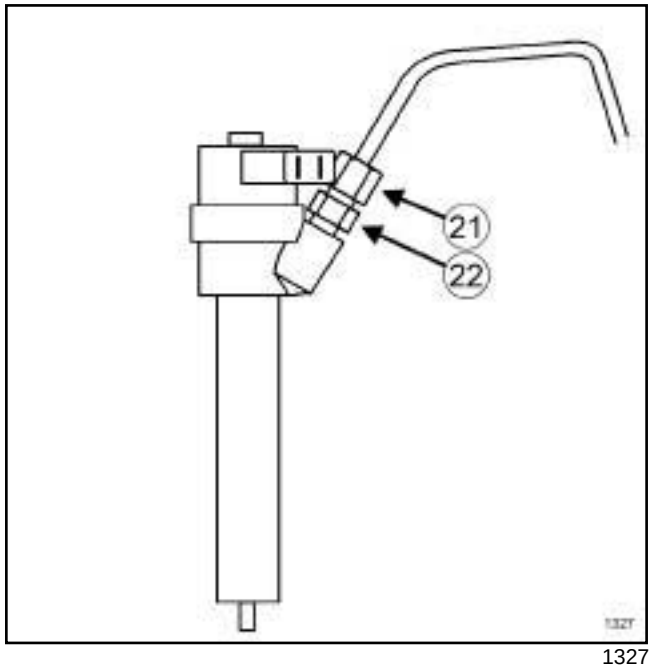

1327

❑

WARNING

When the high pressure pipe unions (**21**) on the injector holder have been loosened, always hold the edge filter retaining nut (**22**) with a lock wrench.

❑ Remove:

- the nuts from the four high pressure pipes between the injector rail and the injector on the rail end,
- the nuts from the four high pressure pipes between the injector rail and the injector on the injector end,

❑ Remove the four high pressure pipes and dispose of them in a bin.

Note:

Make preparations for fuel outflow. Clean with new wipes.

❑ Fit the correct blanking plugs.

B84 or C84 or G84 or S84, and K9K, and 732 or 734

❑ Remove the high pressure pipe between the high pressure pump and the injector rail and dispose of it in a bin.

WARNING

When loosening the connector of the high pressure pipe, the intermediate nut must be secured on the pump using a lock wrench.

Note:

Make preparations for fuel outflow. Clean with new wipes.

II - OPERATION FOR REMOVAL OF PART CONCERNED

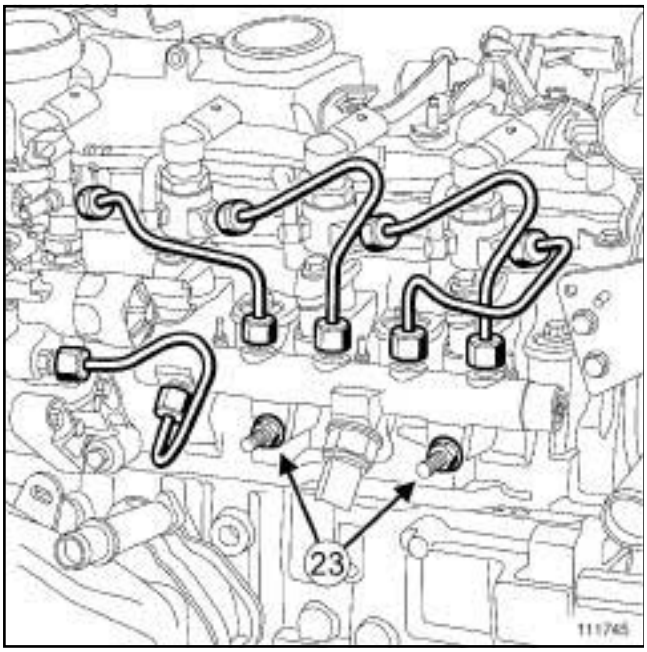

111745

❑ Remove:

- the nuts (**23**) from the injector rail,
- the injector rail.

WARNING

If the injector rail is to be reused, keep it in a sealed plastic bag all the time it is disconnected.

REFITTING

I - REFITTING PREPARATIONS OPERATION

❑

WARNING

Only remove the blanking plugs immediately before connecting the fuel circuit pipes.

The plugs are single-use. Do not reuse them; dispose of the whole set after use.

❑ Take the injector rail out of its plastic bag.

WARNING

If an injector rail is being replaced, only remove the new one from its original packaging when it is about to be fitted.

II - REFITTING OPERATION FOR PART CONCERNED

❑ Fit the injector rail.

❑ Finger tighten the injector rail bolts.

❑ Remove the blanking plugs.

❑ Fit the new high pressure pipe between the injector rail and the high pressure pump.

Note:

If the new pipes kit does not contain an applicator, do not lubricate the pipe threads (as they are self-lubricating pipes).

❑ Finger tighten the high pressure pipe nuts, starting with the one at the injector rail end.

❑ Remove the blanking plugs.

❑ Fit the new high pressure pipes between the injector rail and the injectors.

Note:

If the new pipes kit does not contain an applicator, do not lubricate the pipe threads (as they are self-lubricating pipes).

❑ Finger tighten the high pressure pipe nuts, starting with the one at the injector rail end.

❑ Torque tighten the **injector rail mounting nuts (28 Nm)**.

B84 or C84 or G84 or S84, and K9K, and 732 or 734

❏ Torque tighten:

- the **high pressure pipe nuts between the injector rail and the injectors (24 Nm)** using the **(Mot. 1566)** or the **(Mot. 1746)**, starting with the rail side.
- the **high pressure pipe nuts between the injector rail and the high pressure pump (24 Nm)** using the **(Mot. 1566)** or the **(Mot. 1746)**, starting with the high pressure pump side.

III - FINAL OPERATION.

❏ Refit:

- the injector rail protector support,
- the injector rail protector support bolt and nuts.

> Note:
>
> Ensure that the injector rail protector support mounting bolt does not fall under the high pressure pump.

❏ Clip the diesel evacuation pipe into place.

❏ Remove the blanking plugs.

❏ Connect:

- the fuel supply pipe,
- the fuel return pipe.

❏ Fit the wiring harness.

❏ Refit the wiring harness clip nut.

❏ Clip on the wiring harness clip.

❏ Connect:

- the rail pressure sensor connector,
- the diesel temperature sensor connector,
- the flow regulation solenoid valve connector,
- the pressure regulation solenoid valve connector,
- the cylinder marking sensor connector,
- the damper valve connector,
- the heater plugs connector,
- the injectors' connector.

❏ Refit:

- the dipstick duct bolts,
- the dipstick,
- the injector rail protector cover,
- the injector rail protector cover bolt and nut.

❏ Clip the injector rail protector cover into place.

❏ Refit:

- the clip on the stainless steel pipe if necessary,
- the stainless steel pipe on the hose, aligning the markings,
- the air inlet duct clip between the turbocharger and the intercooler.

❏ Tighten the **air inlet duct clip (5.5 Nm)**.

❏ Clip the stainless steel pipe to the turbocharger.

❏ Refit:

- the stainless steel pipe bolts,
- the air inlet duct on the damper valve.

❏ Tighten the clip.

❏ Connect:

- the air inlet pressure sensor connector,
- the battery (see **Battery : Removal - Refitting**) (MR 364, 80A, Battery).

❏ Reprime the fuel circuit with the manual priming pump.

❏ Refit the engine covers.

❏ Using the **diagnostic tool**, clear any faults stored by the injection computer, before restarting the engine.

> **WARNING**
>
> Check that there are no diesel leaks:
>
> - check the sealing after repair (see **13B**, **Diesel injection**, **High pressure pipe: Checking**, page **13B-157**) ,
> - run the engine at idle speed,
> - accelerate several times at no load,
> - switch off the ignition,
> - check that there are no diesel leaks.

❏ Use the **diagnostic tool** to check that there are no stored faults; clear them if necessary.

Injector rail: Removal - Refitting

B84 or C84 or E84 or K84 or L84, and M9R

Essential equipment
diagnostic tool

Tightening torques ▽	
injector rail bolts	**25 Nm**
front end panel upper bolts	**21 Nm**
front end panel lower bolts	**44 Nm**

IMPORTANT

Before carrying out any work on the injection system, check using the **diagnostic tool** :

- that the injector rail is not under pressure,

- that the fuel temperature is not too high.

Loosening a high pressure pipe union when the engine is running is strictly prohibited.

WARNING

Ensure that any high pressure pipe removed is replaced.

IMPORTANT

Consult the safety and cleanliness advice and operation recommendations before carrying out any repair (see **13B**, **Diesel injection**, **Diesel injection: Precautions for repair**, page **13B-12**) .

REMOVAL

I - REMOVAL PREPARATION OPERATION

❑ Position the vehicle on a two-post lift (see **Vehicle: Towing and lifting**) (MR 364, 02A, Lifting equipment).

❑ Disconnect the battery (see **Battery: Removal - Refitting**) (MR 364, 80A, Battery).

❑ Remove:

- the engine covers,

- the front bumper (see **Front bumper: Removal - Refitting**) (MR 365, 55A, Exterior protection).

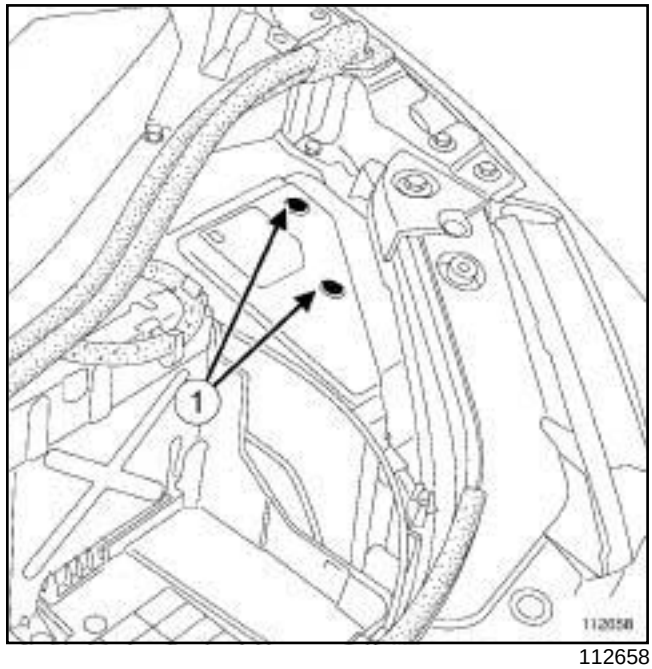

112658

❑ Remove:

- the engine accessories unit cover bolts (**1**) ,

- the engine accessories unit cover.

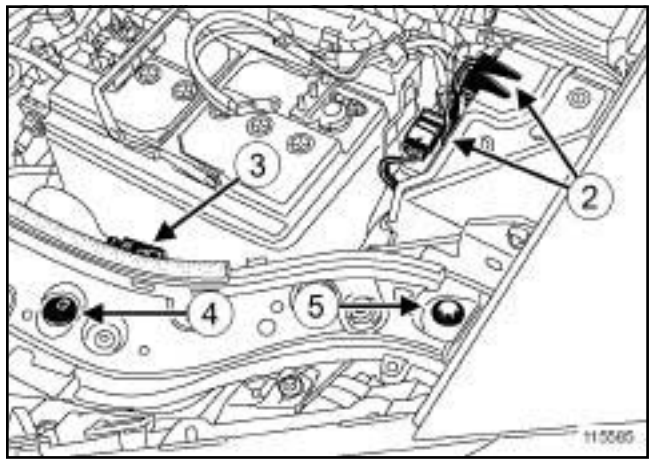

115585

❑ Disconnect the connectors (**2**) from the engine accessories unit.

❑ Unclip the bonnet opening cable (**3**) .

❑ Remove:

- the front end panel clips (**4**) ,

- the front end panel upper bolts (**5**) .

❑ Disconnect the screen washer pipes.

B84 or C84 or E84 or K84 or L84, and M9R

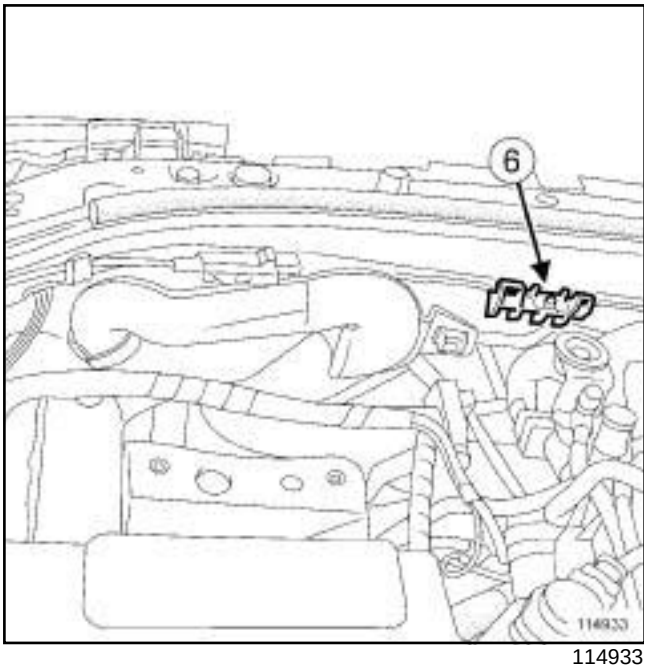

114933

❑ Unclip the air inlet scoop (**6**) .

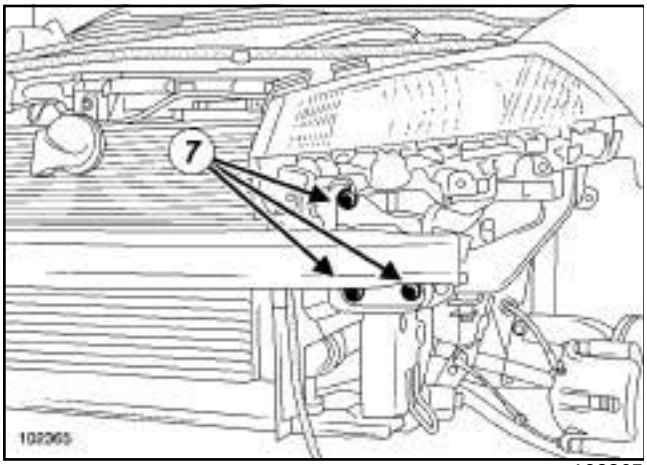

102365

❑ Remove:

- the front end panel lower bolts (**7**) ,
- the front end panel,
- the rail protector (see **13B**, **Diesel injection**, **Injector rail protector: Removal - Refitting**, page **13B-154**) ,
- the oil decanter (see **11A**, **Top and front of engine**, **Oil decanter: Removal - Refitting**, page **11A-301**) ,
- the high pressure pipe between the pump and the rail (see **13B**, **Diesel injection**, **High-pressure pipe between the pump and rail: Removal - Refitting**, page **13B-160**) ,
- the high pressure pipes between the rail and the injectors (see **13B**, **Diesel injection**, **High-pressure pipe between the rail and injector: Removal - Refitting**, page **13B-181**) .

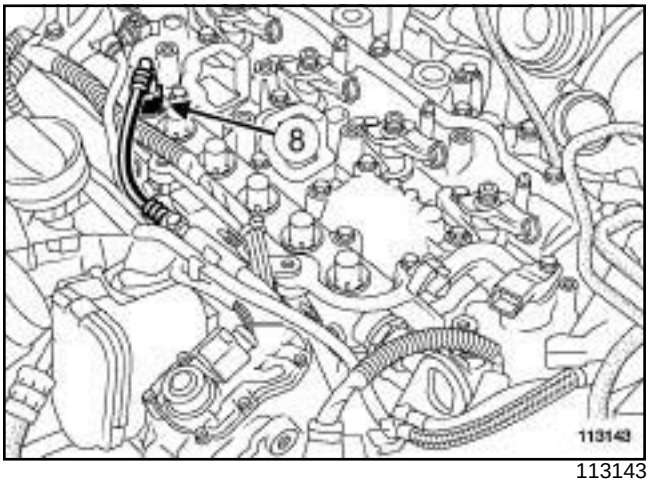

113143

❑ Disconnect the diesel return pipe union (**8**) from the injector rail.

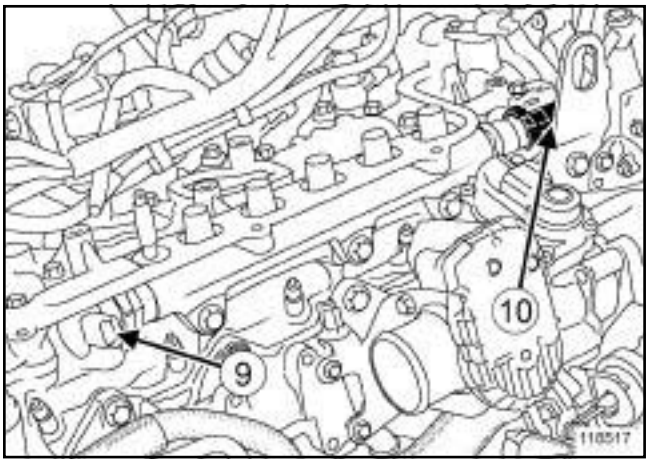

118517

❑ Disconnect:

- the fuel pressure regulator connector (**9**) ,
- the connector (**10**) from the rail pressure sensor.

❑ Remove:

- the damper valve (see **12A**, **Fuel mixture**, **Air inlet flap: Removal - Refitting**, page **12A-33**) ,
- the exhaust gas recirculation solenoid valve (see **14A**, **Antipollution**, **Exhaust gas recirculation solenoid valve: Removal - Refitting**, page **14A-23**) .

B84 or C84 or E84 or K84 or L84, and M9R

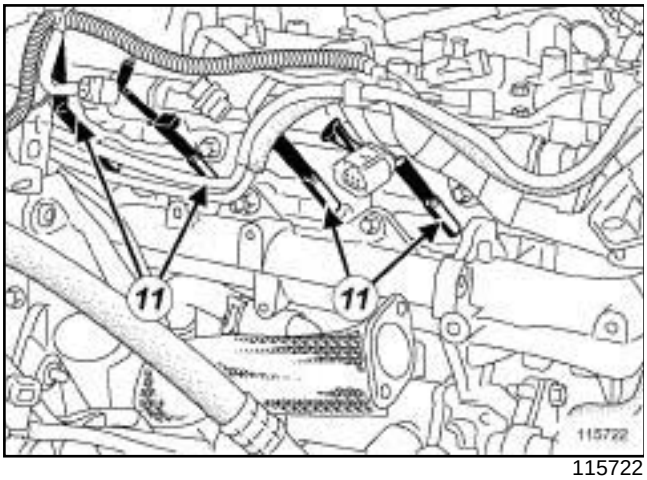

115722

❑ Disconnect the heater plug connectors (**11**) .

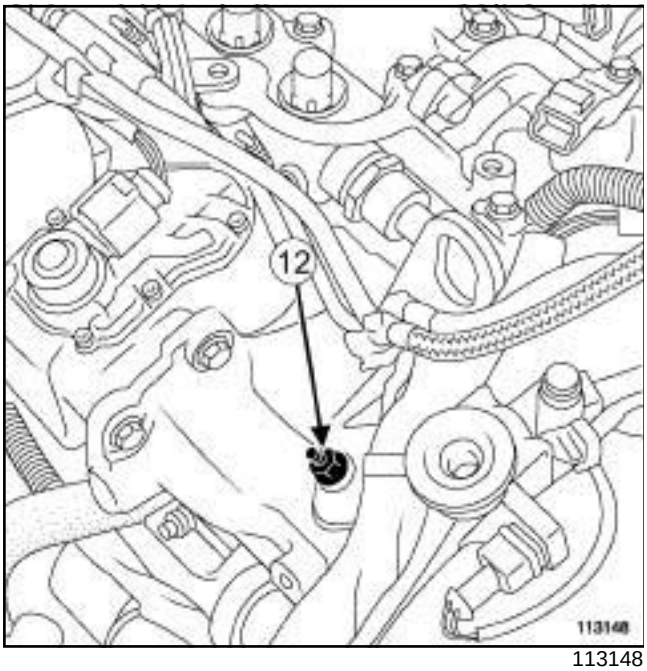

113148

❑ Remove the nut (**12**) from the wiring harness,

❑ Remove:

- the wiring harness,
- the fuel pipes.

II - OPERATION FOR REMOVAL OF PART CONCERNED

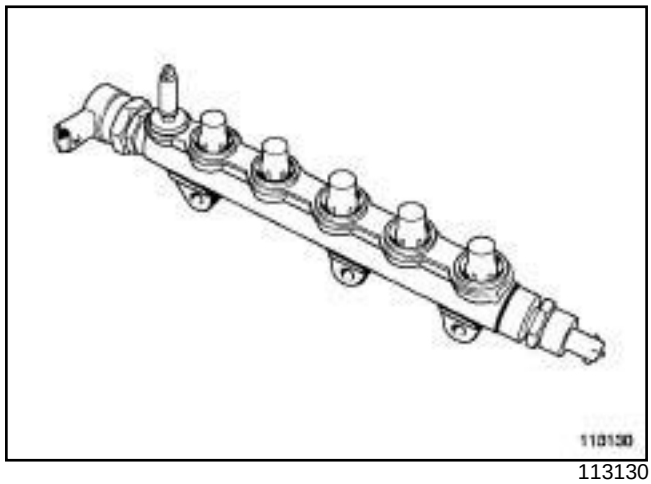

113130

❑ Fit blanking plugs to the injector rail openings (see **13B**, **Diesel injection**, **Diesel injection: Precautions for repair**, page **13B-12**) .

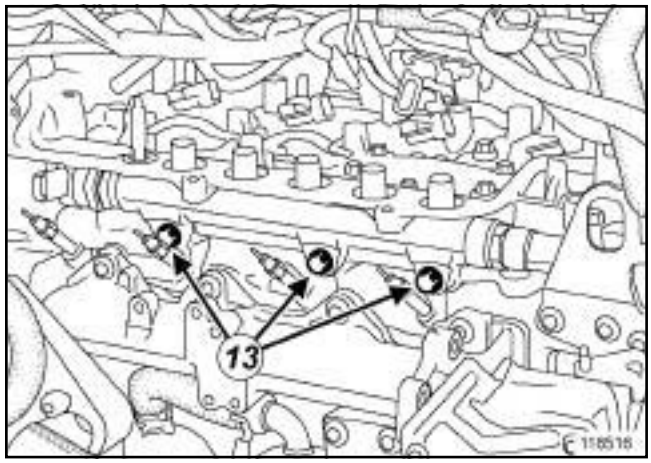

118516

❑ Remove:

- the injector rail bolts (**13**) ,
- the injector rail along with its seal.

REFITTING

I - REFITTING PREPARATIONS OPERATION

❑ Always replace the injector rail seal.

B84 or C84 or E84 or K84 or L84, and M9R

II - REFITTING OPERATION FOR PART CONCERNED

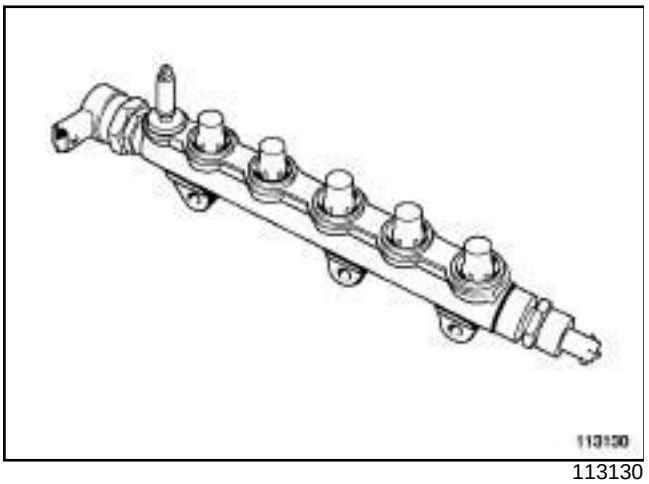

113130

❑ Position the injector rail along with its seal.

> **WARNING**
>
> Do not remove the protective caps from each component until the last moment.
>
> Always replace any high pressure pipe removed with a new one.
>
> After any operation, check that there are no leaks in the diesel circuit.

❑ Without tightening, fit:

- the injector rail bolts,
- the high pressure pipe unions between the rail and the injector.

❑ Torque tighten the **injector rail bolts (25 Nm)**.

> **WARNING**
>
> Do not put high pressure pipes under stress.

B84 or C84 or E84 or K84 or L84, and M9R

III - FINAL OPERATION.

❏ Refit:

- the high pressure pipes between the rail and the injectors (see **13B**, **Diesel injection**, **High-pressure pipe between the rail and injector: Removal - Refitting**, page **13B-181**) ,
- the high pressure pipe between the pump and the rail (see **13B**, **Diesel injection**, **High-pressure pipe between the pump and rail: Removal - Refitting**, page **13B-160**) ,
- the oil decanter (see **11A**, **Top and front of engine**, **Oil decanter: Removal - Refitting**, page **11A-301**) ,
- the rail protector (see **13B**, **Diesel injection**, **Injector rail protector: Removal - Refitting**, page **13B-154**) .

❏ Connect the diesel return pipe union to the injector rail.

❏ Fit:

- the wiring harness,
- the fuel pipes.

❏ Refit the wiring harness nut.

❏ Connect:

- the fuel pressure regulator connector,
- the rail pressure sensor connector,
- the heater plug connectors.

❏ Refit:

- the exhaust gas recirculation solenoid valve (see **14A**, **Antipollution**, **Exhaust gas recirculation solenoid valve: Removal - Refitting**, page **14A-23**) ,
- the damper valve (see **12A**, **Fuel mixture**, **Air inlet flap: Removal - Refitting**, page **12A-33**) ,
- the front end panel,
- the front end panel upper bolts,
- the front end panel lower bolts,
- the front end panel clips.

❏ Torque tighten:

- the **front end panel upper bolts (21 Nm)**,
- the **front end panel lower bolts (44 Nm)**.

❏ Clip on the air inlet scoop.

❏ Connect the engine accessories unit connectors.

❏ Clip the bonnet opening cable.

❏ Connect the screen washer pipes.

❏ Refit:

- the engine accessories unit cover,
- the engine accessories unit cover bolts,
- the front bumper (see **Front bumper: Removal - Refitting**) (MR 365, 55A, Exterior protection),
- the engine covers.

❏ Prime the diesel circuit using the manual priming pump.

❏ Connect the battery (see **Battery : Removal - Refitting**) (MR 364, 80A, Battery).

❏ Check that there are no diesel leaks:

- run the engine at idle speed,
- accelerate several times at no load,
- carry out a road test,
- switch off the ignition,
- check that there is no diesel fuel escaping.

Injector rail: Removal - Refitting

B84 or C84 or G84 or S84, and F9Q

Essential equipment
diagnostic tool

Tightening torques ▽	
injector rail bolts	**25 Nm**

IMPORTANT

Before carrying out any work on the injection system, check using the **diagnostic tool** :

- that the rail is not under pressure,
- that the fuel temperature is not too high.

Working on the circuit with the engine running is strictly forbidden.

IMPORTANT

Use the diagnostic tool before any operation is carried out on the injection circuit to check:

- that the rail is not under pressure,
- that the fuel temperature is not too high.

Working on the circuit with the engine running is strictly forbidden.

IMPORTANT

Consult the safety and cleanliness advice and operation recommendations before carrying out any repair (see **13B**, **Diesel injection**, **Diesel injection: Precautions for repair**, page **13B-12**) .

REMOVAL

I - REMOVAL PREPARATION OPERATION

❑ Disconnect the battery (see **Battery: Removal - Refitting**) (MR 364, 80A, Battery).

❑ Remove:

- the engine cover,
- the air inlet duct (see **12A**, **Fuel mixture**, **Air inlet duct: Removal - Refitting**, page **12A-46**) ,
- the injector rail protector (see **13B**, **Diesel injection**, **Injector rail protector: Removal - Refitting**, page **13B-154**) .

❑ Disconnect the heater plugs.

❑ Remove:

- the fuel return rail (see **13B**, **Diesel injection**, **Diesel injector fuel return rail: Removal - Refitting**, page **13B-148**) ,
- the high pressure pipes between the rail and the injectors (see **13B**, **Diesel injection**, **High-pressure pipe between the rail and injector: Removal - Refitting**, page **13B-181**) ,
- the high pressure pipe between the pump and the rail (see **13B**, **Diesel injection**, **High-pressure pipe between the pump and rail: Removal - Refitting**, page **13B-160**) .

F9Q, and 803 or 804 or 816 or 818

❑ Remove the oil decanter.

B84 or C84 or G84 or S84, and F9Q

II - OPERATION FOR REMOVAL OF PART CONCERNED

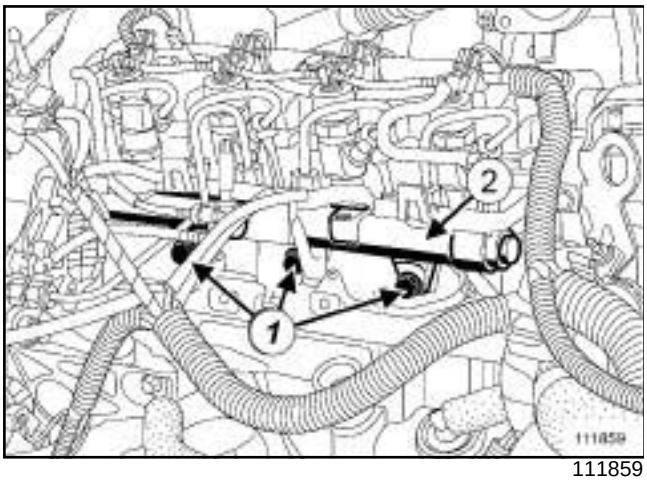

111859

❑ Remove:

- the injector rail bolts (**1**) ,
- the injector rail (**2**) .

REFITTING

I - REFITTING OPERATION FOR PART CONCERNED

❑ Fit the injector rail.

> **WARNING**
> Do not remove the blanking plugs from each component until the last moment.
>
> Also, do not remove the components from their packaging until they are to be fitted to the vehicle.

❑ Always replace any high pressure pipe or high pressure pipe clip removed with a new one.

❑ Tighten the injector rail bolts, leaving clearance between the bolt heads and the rail.

❑ Refit the injector rail pipes and the rail-pump pipe:

- fit (without tightening) the high pressure pipe nuts on the pump and injector sides,
- fit (without tightening) the high pressure pipe nuts on the rail side.

❑ Torque tighten:

- the **injector rail bolts (25 Nm)**,
- the high pressure pipe between the pump and the rail (see **13B**, **Diesel injection**, **High-pressure pipe between the pump and rail: Removal - Refitting**, page **13B-160**) .
- the high pressure pipes between the rail and the injectors (see **13B**, **Diesel injection**, **High-pressure pipe between the rail and injector: Removal - Refitting**, page **13B-181**) .

❑ Refit the fuel return rail (see **13B**, **Diesel injection**, **Diesel injector fuel return rail: Removal - Refitting**, page **13B-148**) ,

II - FINAL OPERATION.

F9Q, and 803 or 804 or 816 or 818

❑ Refit the oil decanter.

❑ Refit the air inlet duct with its old seal (see **12A**, **Fuel mixture**, **Air inlet duct: Removal - Refitting**, page **12A-46**) .

> Note:
> Refit the inlet duct without refitting the injector rail protector or replacing the duct seal.

❑ Reconnect the battery (see **Battery: Removal - Refitting**) (MR 364, 80A, Battery).

❑ Check that there are no diesel leaks:

- run the engine at idle speed,
- accelerate several times at no load,
- switch off the ignition,
- check that there is no diesel fuel escaping.

❑ Remove the air inlet duct (see **12A**, **Fuel mixture**, **Air inlet duct: Removal - Refitting**, page **12A-46**) .

❑ Refit:

- the injector rail protector (see **13B**, **Diesel injection**, **Injector rail protector: Removal - Refitting**, page **13B-154**) ,
- the air inlet duct with a new seal.

❑ Refit the engine cover.

B84 or C84 or G84 or S84, and K9K, and 724

Tightening torques ▽	
injector rail nuts	**28 N.m**

IMPORTANT
To avoid all risk of damage to the systems, apply the safety and cleanliness instructions and operation recommendations before carrying out any repair (see **13B**, **Diesel injection**, **Diesel injection: Precautions for repair**, page **13B-12**) .

IMPORTANT
Wear leaktight gloves (Nitrile type) for this operation.

WARNING
To avoid any corrosion or damage, protect the areas on which fuel is likely to run.

REMOVAL

I - REMOVAL PREPARATION OPERATION

❑ Remove the front engine cover.

❑ Disconnect the battery (see **Battery: Removal - Refitting**) (80A, Battery).

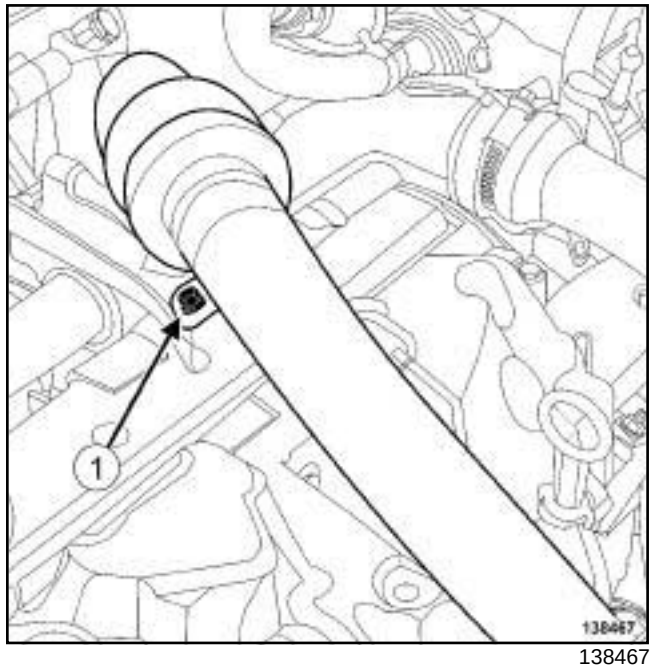

138467

❑ Remove the bolt (**1**) on the intercooler air inlet pipe.

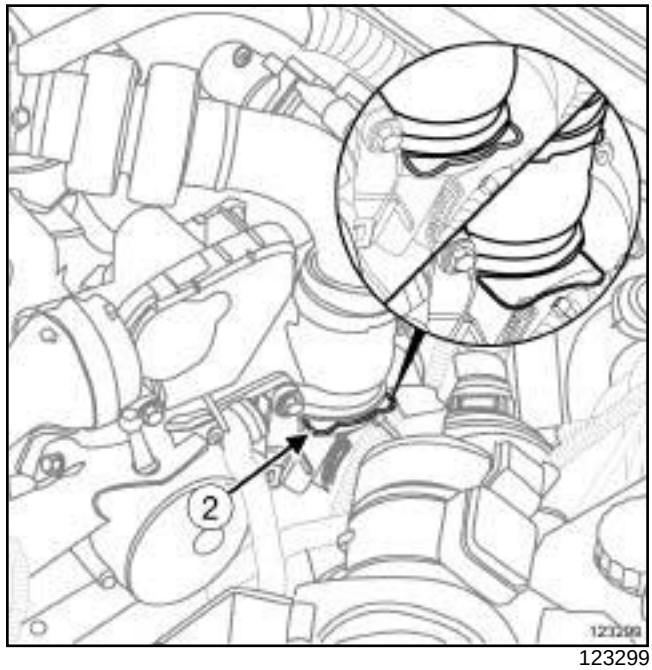

123299

❑ Pull the clip (**2**) from the intercooler inlet air pipe.

❑ Disconnect the intercooler air inlet pipe from the turbocharger.

❑ Move aside the intercooler air inlet pipe.

B84 or C84 or G84 or S84, and K9K, and 724

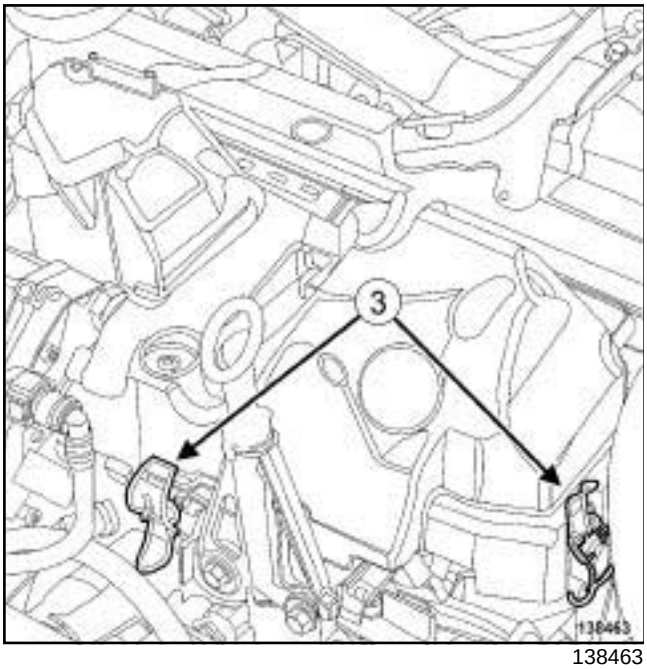

138463

❑ Unclip the injector rail protector cover at (**3**) .

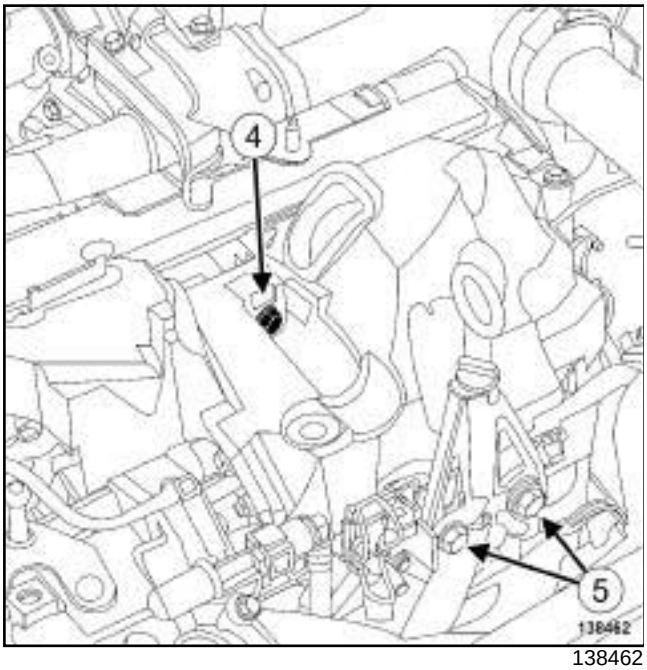

138462

❑ Remove:

- the bolt (**4**) of the injector rail protector cover,
- the injector rail protector cover,
- the bolts (**5**) from the dipstick guide tube.

❑ Move aside the dipstick guide tube.

❑ Disconnect the heater plug connectors.

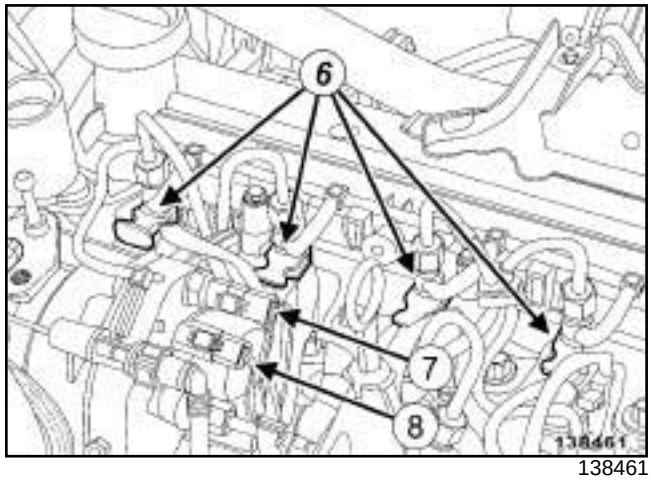

138461

❑ Disconnect:

- the diesel injector connectors (**6**) ,
- the fuel temperature sensor connector (**7**) ,
- the flow actuator connector (**8**) .

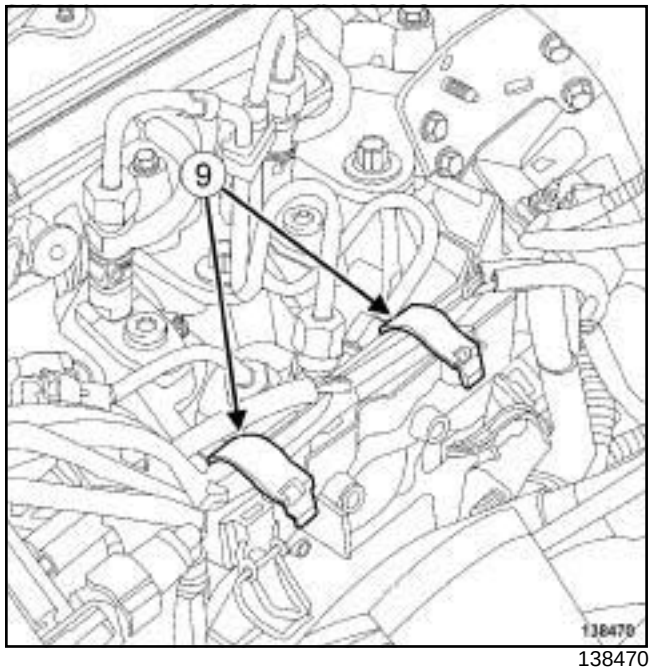

138470

❑ Unclip the injection wiring clips (**9**) .

❑ Move aside the rail protector injection wiring.

B84 or C84 or G84 or S84, and K9K, and 724

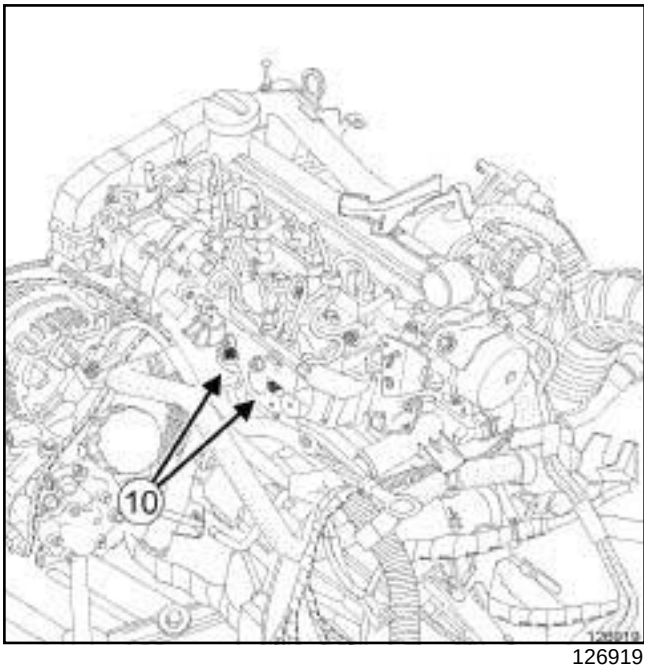

126919

❑ Remove:

- the rail protector nuts (**10**) ,
- the rail protector,
- the high pressure pipe between the pump and the rail (see **13B**, **Diesel injection**, **High-pressure pipe between the pump and rail: Removal - Refitting**, page **13B-160**) ,
- the high pressure pipes between the rail and the injector (see **13B**, **Diesel injection**, **High-pressure pipe between the rail and injector: Removal - Refitting**, page **13B-181**) .

II - OPERATION FOR REMOVAL OF PART CONCERNED

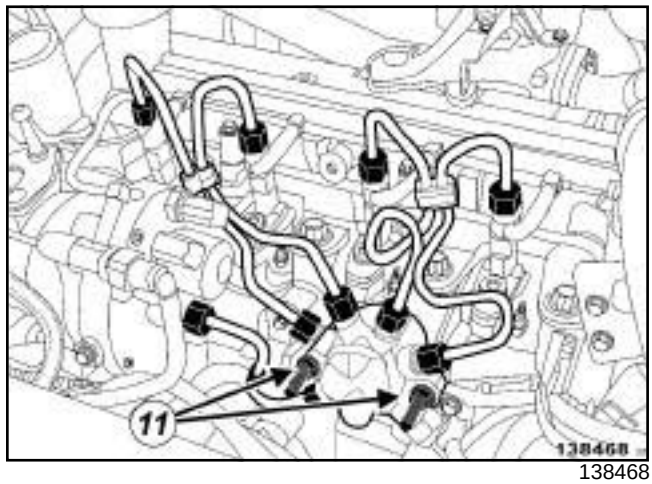

138468

❑ Disconnect the rail pressure sensor connector.

❑ Remove:

- the nuts (**11**) from the injector rail,
- the injector rail.

REFITTING

I - REFITTING OPERATION FOR PART CONCERNED

❑ Fit the injector rail.

❑ Connect the rail pressure sensor connector.

❑ Without tightening, fit the injector rail nuts.

B84 or C84 or G84 or S84, and K9K, and 724

II - FINAL OPERATION

❏ Refit:

- the new high pressure pipes between the rail and the injector (see **13B**, **Diesel injection**, **High-pressure pipe between the rail and injector: Removal - Refitting**, page **13B-181**) ,
- the new high pressure pipe between the pump and the rail (see **13B**, **Diesel injection**, **High-pressure pipe between the pump and rail: Removal - Refitting**, page **13B-160**) .

❏ Torque tighten the **injector rail nuts (28 N.m)**.

❏ Refit the injector rail protector.

❏ Fit the injection wiring on the injector rail protector.

❏ Clip on the injection wiring clips.

❏ Connect:

- the diesel injector connectors,
- the fuel temperature sensor connector,
- the fuel flow actuator connector,
- the heater plug connectors.

❏ Refit:

- the dipstick guide tube,
- the injector rail protector cover,
- the intercooler air inlet pipe.

❏ Connect the intercooler air inlet pipe on the turbocharger.

❏ Fit the clip of the intercooler air inlet pipe at the turbocharger end.

❏ Connect the battery (see **Battery: Removal - Refitting**) (80A, Battery).

❏ Start the engine.

❏ Check that there are no fuel leaks (see **13B**, **Diesel injection**, **High pressure pipe: Checking**, page **13B-157**) .

❏ Refit the engine cover.

B84 or C84 or G84 or S84, and K9K, and 722 or 724 or 728 or 729 or 732

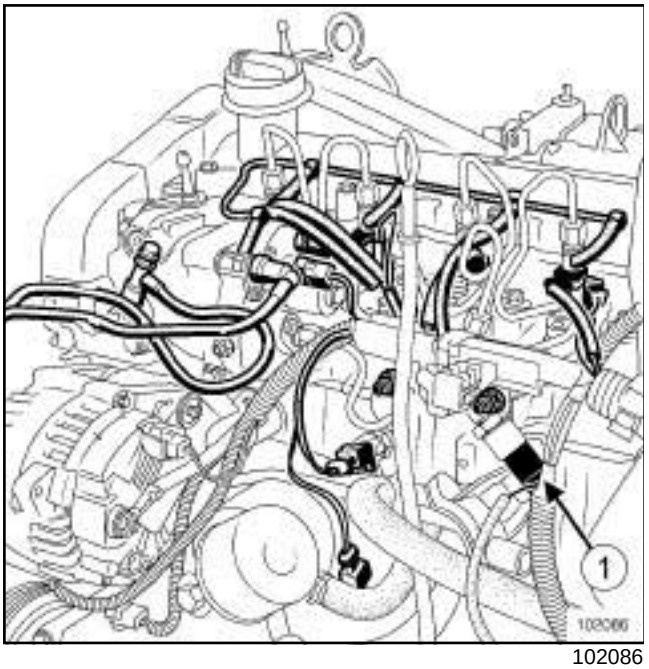

102086

The pressure sensor (**1**) cannot be removed from the spherical injector rail.

If the pressure sensor is faulty, the « pressure sensor - rail and high pressure pipes » assembly must be replaced (see **13B, Diesel injection, Injector rail**.)

Rail pressure sensor: Removal - Refitting

B84 or C84 or G84 or S84, and F9Q, and 800 or 808

Essential special tooling	
Mot. 997-01	Tool for removing/refitting injector holder fitted with cable.

Essential equipment
diagnostic tool

Tightening torques ▽	
pressure sensor (M12)	**35 Nm**
pressure sensor (M18)	**80 Nm**
battery cover mounting bolts	**4 Nm**

WARNING

Once the warranty period for the injector rail has expired, only the pressure sensor can be replaced.

During the injector rail warranty period, the injector rail should be completely replaced if the pressure sensor fails.

The injector rail may be fitted with 2 types of sensor:

- a sensor with an **M12** diameter thread, fitted with a seal,
- a sensor with an **M18** diameter thread, fitted without a seal.

The 2 types of sensor have different tightening torques.

IMPORTANT

Before carrying out any work on the injection system, check using the **diagnostic tool** :

• that the injector rail is not under pressure,

• that the fuel temperature is not too high.

- Loosening a high pressure pipe union when the engine is running is strictly prohibited.

Always read the repair precautions before carrying out any work (see **13B**, **Diesel injection**, **Diesel injection: Precautions for repair**, page **13B-12**) .

REMOVAL

❑ Disconnect the battery (see **Battery : Removal - Refitting**) (MR 364, 80A, Battery).

❑ Remove the engine covers.

❑ For versions with injector rail protectors:

- Remove the air inlet duct (see **12A**, **Fuel mixture**, **Air inlet duct: Removal - Refitting**, page **12A-46**) ,
- Remove the injector rail protector (see **13B**, **Diesel injection**, **Injector rail protector: Removal - Refitting**, page **13B-154**) .

❑ Cleaning before the operation (see **13B**, **Diesel injection**, **Diesel injection: Precautions for repair**, page **13B-12**) :

- around the pressure sensor, using a brush and some cleaning product,
- wipe the area cleaned with new wipes,
- blow the area cleaned dry using a compressed air gun.

B84 or C84 or G84 or S84, and F9Q, and 800 or 808

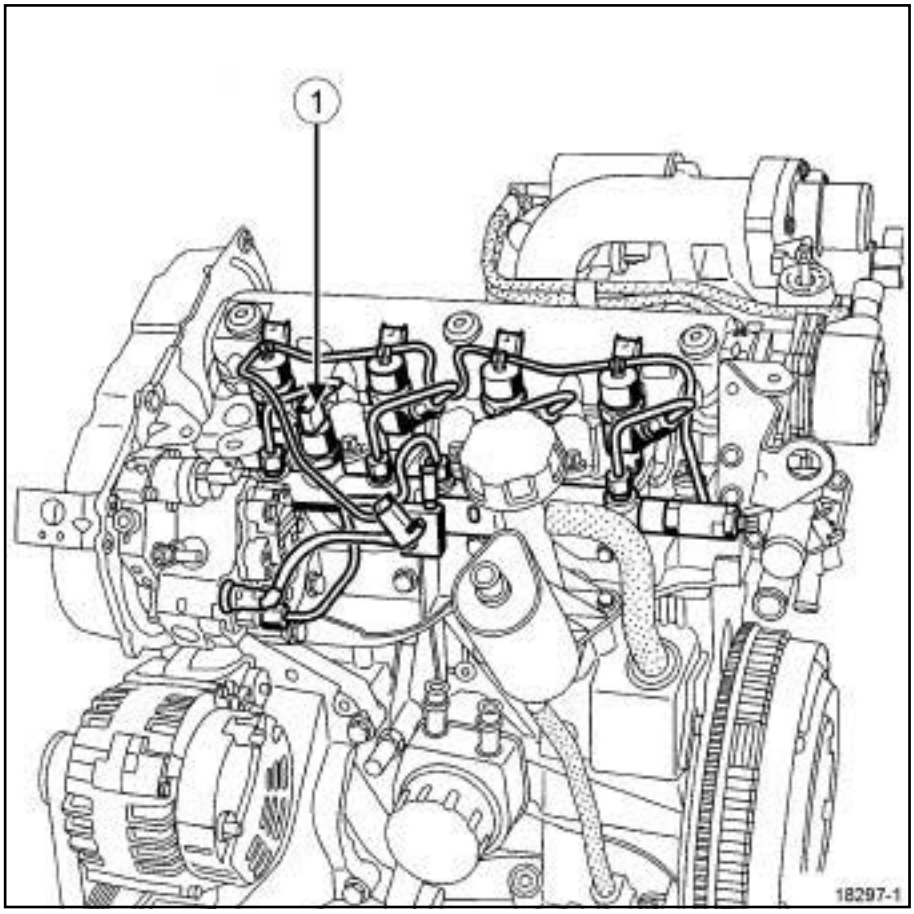

18297-1

- ❑ Disconnect the pressure sensor connector (**1**) .
- ❑ Remove the pressure sensor using the **(Mot. 997-01)**.
- ❑ Fit blanking plugs into the openings.

REFITTING

I - PRESSURE SENSOR WITH M12 DIAMETER THREAD AND SEAL

- ❑ Be sure to replace the seal.
- ❑ Tighten the pressure sensor by hand.
- ❑ Using the **(Mot. 997-01)**, torque tighten the **pressure sensor (M12) (35 Nm)**.

II - PRESSURE SENSOR WITH AN M18 DIAMETER THREAD (WITHOUT SEAL)

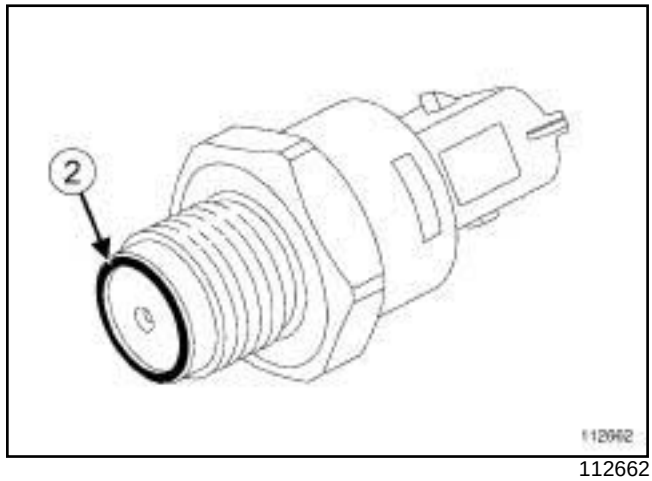

112662

- ❑ Check the condition of the lip seal (**2**) :
  - if the lip seal is marked, the pressure sensor must be replaced.
- ❑ Tighten the pressure sensor by hand.
- ❑ Using the **(Mot. 997-01)**, torque tighten the **pressure sensor (M18) (80 Nm)**.

B84 or C84 or G84 or S84, and F9Q, and 800 or 808

III - CONTINUATION OF REFITTING PROCEDURE

❏ To refit, proceed in the reverse order of removal.

❏ For versions with injector rail protectors:

- Refit the air inlet duct (see **12A**, **Fuel mixture**, **Air inlet duct: Removal - Refitting**, page **12A-46**) .

Note:

Refit the inlet duct without refitting the injector rail protector or replacing the duct seal.

❏ Connect the battery (see **Battery : Removal - Refitting**) (MR 364, 80A, Battery).

❏ Torque tighten the **battery cover mounting bolts (4 Nm)**.

WARNING

Check that there are no diesel leaks:

- run the engine at idle speed,
- accelerate several times at no load,
- switch off the ignition,
- check that there is no diesel fuel escaping.

❏ For versions with injector rail protectors:

- Remove the air inlet duct,
- Refit the injector rail protector (see **13B**, **Diesel injection**, **Injector rail protector: Removal - Refitting**, page **13B-154**) ,
- Refit the air inlet duct (see **12A**, **Fuel mixture**, **Air inlet duct: Removal - Refitting**, page **12A-46**) .

Rail pressure sensor: Removal - Refitting

B84 or C84 or G84 or S84, and F9Q, and 803 or 804

Essential special tooling	
Mot. 997-01	Tool for removing/refitting injector holder fitted with cable.

Essential equipment
diagnostic tool

Tightening torques ▽	
pressure sensor	**80 Nm**
battery cover mounting bolts	**4 Nm**

WARNING

Once the warranty period for the injector rail has expired, only the pressure sensor can be replaced.

During the injector rail warranty period, the injector rail should be completely replaced if the pressure sensor fails.

IMPORTANT

Before carrying out any work on the injection system, check using the **diagnostic tool** :

- that the injector rail is not under pressure,
- that the fuel temperature is not too high.

Loosening a high pressure pipe union when the engine is running is strictly prohibited.

Always read the repair precautions before carrying out any work (see **13B**, **Diesel injection**, **Diesel injection: Precautions for repair**, page **13B-12**) .

REMOVAL

❑ Disconnect the battery (see **Battery: Removal - Refitting**) (MR 364, 80A, Battery).

❑ Remove the front engine cover.

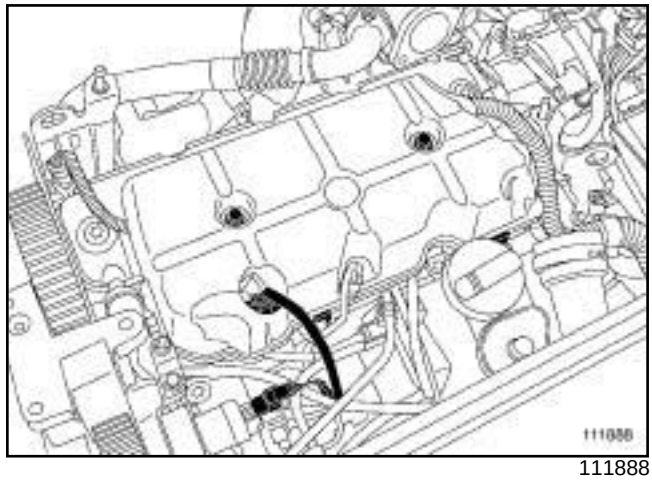

111888

❑ Remove the injector rail protector (see **13B**, **Diesel injection**, **Injector rail protector: Removal - Refitting**, page **13B-154**) .

❑ Cleaning before the operation (see **13B**, **Diesel injection**, **Diesel injection: Precautions for repair**, page **13B-12**) :

- around the pressure sensor, using a brush and some cleaning product,
- wipe the area cleaned with new wipes,
- blow the area cleaned dry using a compressed air gun.

❑ Remove the pressure sensor using the **(Mot. 997-01)**.

❑ Fit blanking plugs into the openings.

REFITTING

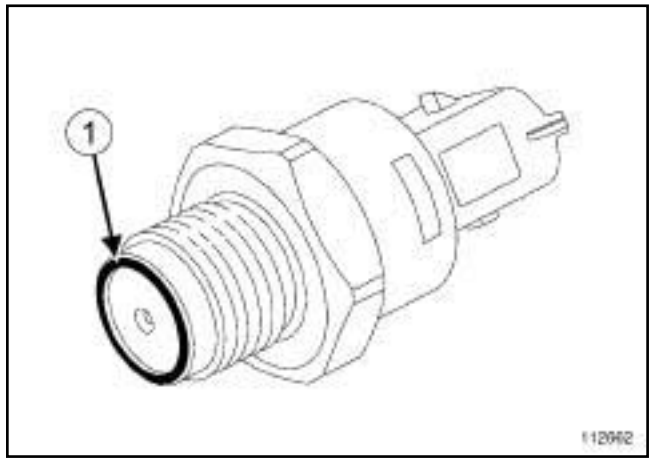

112662

❑ Check the condition of the lip seal (**1**) :

- if the lip seal is marked, the pressure sensor must be replaced.

B84 or C84 or G84 or S84, and F9Q, and 803 or 804

- ❑ Tighten the pressure sensor by hand.
- ❑ Using the **(Mot. 997-01)**, torque tighten the **pressure sensor (80 Nm)**.
- ❑ To refit, proceed in the reverse order of removal.
- ❑ Refit the air inlet duct (see **12A**, **Fuel mixture**, **Air inlet duct: Removal - Refitting**, page **12A-46**) .

> Note:
>
> Refit the air inlet duct without refitting the injector rail protector or replacing the duct seal.

- ❑ Connect the battery (see **Battery : Removal - Refitting**) (MR 364, 80A, Battery).
- ❑ Torque tighten the **battery cover mounting bolts (4 Nm)**.

> **WARNING**
>
> Check that there are no diesel leaks:
>
> - run the engine at idle speed,
> - accelerate several times at no load,
> - switch off the ignition,
> - check that there is no fuel escaping.

- ❑ Remove the air inlet duct.
- ❑ Refit the injector rail protector (see **13B**, **Diesel injection**, **Injector rail protector: Removal - Refitting**, page **13B-154**) .
- ❑ Refit the air inlet duct (see **12A**, **Fuel mixture**, **Air inlet duct: Removal - Refitting**, page **12A-46**) .

K9K, and 732 or 734

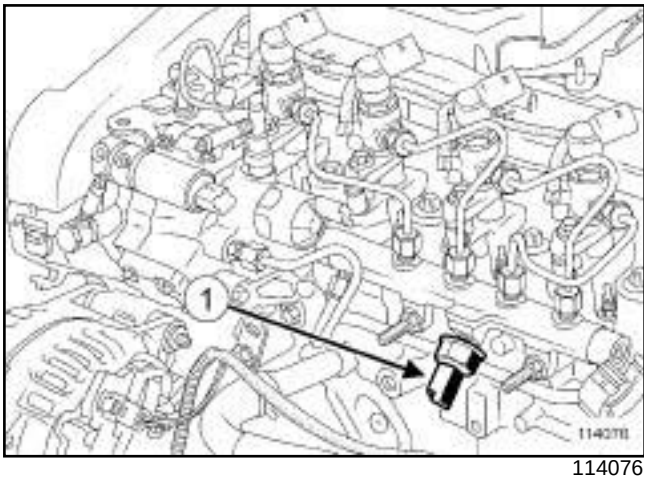

114076

The injector rail pressure sensor (**1**) cannot be separated from the injector rail.

In the event of a fault on the rail pressure sensor, replace the “rail pressure sensor - injector rail and high pressure pipes” assembly (see **13B**, **Diesel injection**, **Injector rail: Removal - Refitting**, page **13B-204**) .

K9K, and 722 or 724 or 728 or 729

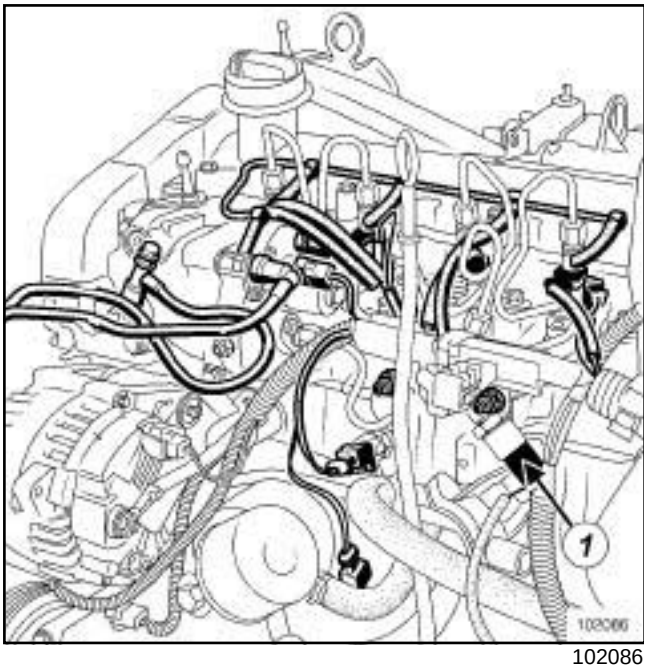

102086

- The pressure sensor (**1**) cannot be removed from the spherical injector rail.

  If the pressure sensor is faulty, replace the « pressure sensor - high pressure pipes and rail » assembly (see **13B**, **Diesel injection**, **Injector rail: Removal - Refitting**, page **13B-204**) .

Rail pressure sensor: Removal - Refitting

B84 or C84 or E84 or K84 or L84, and M9R

Essential equipment
diagnostic tool
forked endpiece

Tightening torques ▽	
rail pressure sensor	**80 Nm**
turbocharger outlet air pipe bolts	**10 Nm**

IMPORTANT

Before carrying out any work on the injection system, check using the **diagnostic tool** :

- that the rail is not under pressure,

- that the fuel temperature is not too high.

Working on the circuit with the engine running is strictly forbidden.

WARNING

Once the warranty period for the injector rail has expired, only the pressure sensor can be replaced.

During the injector rail warranty period, the injector rail should be completely replaced if the pressure sensor fails.

IMPORTANT

Consult the safety and cleanliness advice and operation recommendations before carrying out any repair (see **13B**, **Diesel injection**, **Diesel injection: Precautions for repair**, page **13B-12**) .

REMOVAL

I - REMOVAL PREPARATION OPERATION

❑ Disconnect the battery (see **Battery: Removal - Refitting**) (MR 364, 80A, Battery).

❑ Remove the front engine cover.

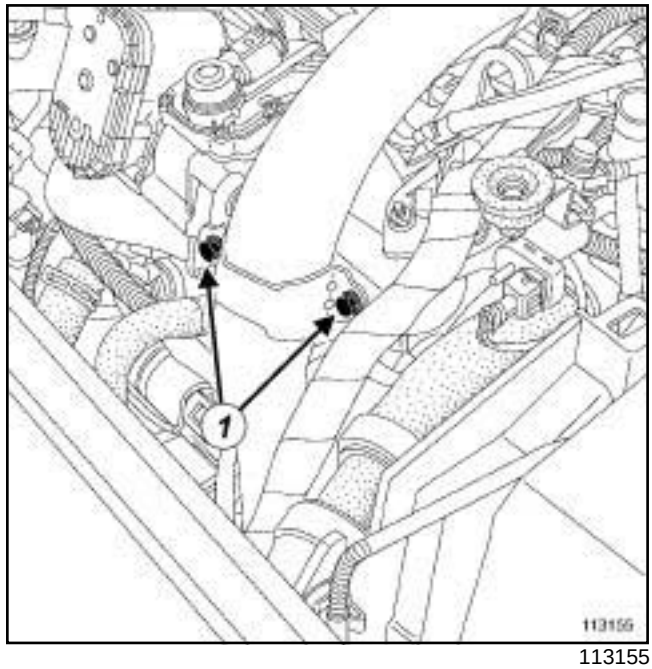

113155

❑ Remove the bolts (**1**) from the turbocharger air outlet pipe on the intake distributor.

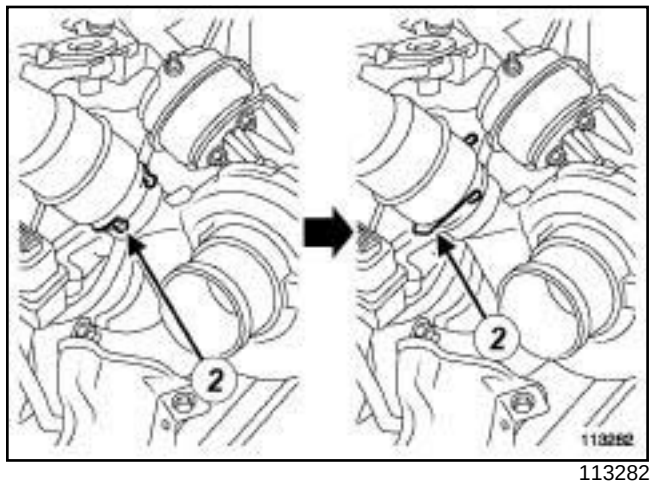

113282

❑ Pivot the turbocharger air outlet pipe clip (**2**) .

❑ Move the turbocharger air outlet pipe towards the intercooler.

B84 or C84 or E84 or K84 or L84, and M9R

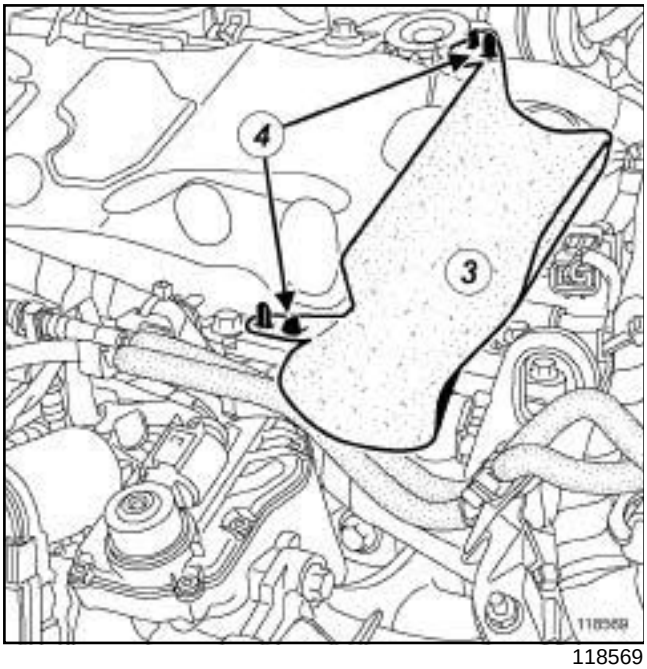

118569

❑ Remove the intercooler air inlet pipe heat shield (**3**) by the tabs (**4**) .

II - OPERATION FOR REMOVAL OF PART CONCERNED

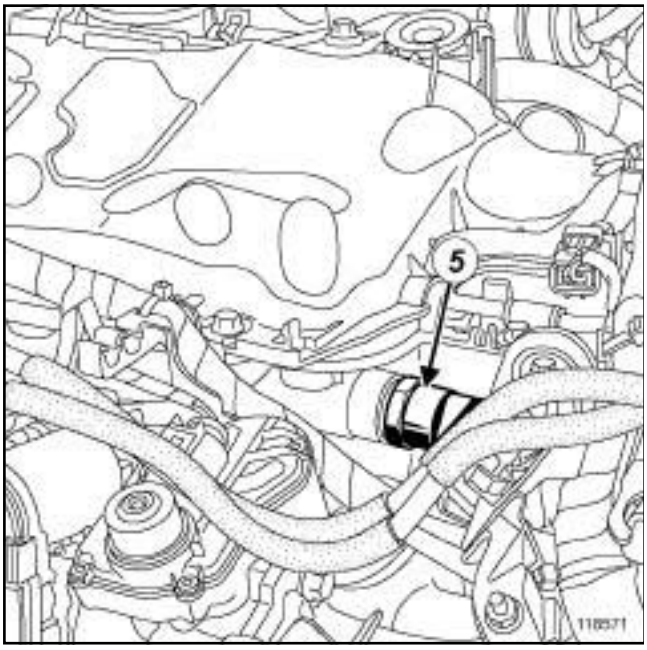

118571

❑ Disconnect the rail pressure sensor connector.

❑ Remove the rail pressure sensor (**5**) .

❑ Fir a blanking plug.

REFITTING

I - REFITTING OPERATION FOR PART CONCERNED

❑ Remove the blanking plug.

> **WARNING**
> Do not remove the blanking plugs from each component until the last moment.
>
> Also, do not remove the components from their packaging until they are to be fitted to the vehicle.

❑ Discard the blanking plugs, do not reuse them.

❑ Refit the rail pressure sensor.

> Note:
>
> The rail pressure sensor has no seal.

❑ Tighten to torque the **rail pressure sensor (80 Nm)** using a **forked endpiece (27 mm)**.

❑ Connect the rail pressure sensor connector.

II - FINAL OPERATION.

❑ Refit the intercooler air inlet pipe heat shield.

❑ Rotate the clip on the turbocharger outlet air pipe to refit the clip in its housing.

❑ Clip the turbocharger air outlet pipe onto the turbocharger.

❑ Refit the turbocharger air outlet pipe bolts on the intake distributor.

❑ Torque tighten the **turbocharger outlet air pipe bolts (10 Nm)**.

❑ Refit the engine cover.

❑ Connect the battery (see **Battery : Removal - Refitting**) (MR 364, 80A, Battery).

❑ Prime the diesel circuit using the manual priming pump.

Oxygen sensor: Removal - Refitting

F9Q, and 818

Essential special tooling	
Mot. 1495-01	22 mm socket for removing/ refitting oxygen sensors.

Tightening torques ▽	
oxygen sensor	**60 N.m**

WARNING

Do not use any product designed to improve the electrical contact in the injection computer and oxygen sensor connectors or on the bodies of the oxygen sensors.

Failure to respect this advice causes the oxygen sensor to malfunction and results in failure to comply with the emission control standard.

WARNING

If the connections are corroded, repair the wiring (see **Wiring: Precautions for repair**) (Technical Note 6015A, 88A, Wiring).

REMOVAL

I - REMOVAL PREPARATION OPERATION

❑ Remove:

- the engine cover,
- the scuttle panel grille (see **Scuttle panel grille: Removal - Refitting**) (56A, Exterior equipment).

II - OPERATION FOR REMOVAL OF PART CONCERNED

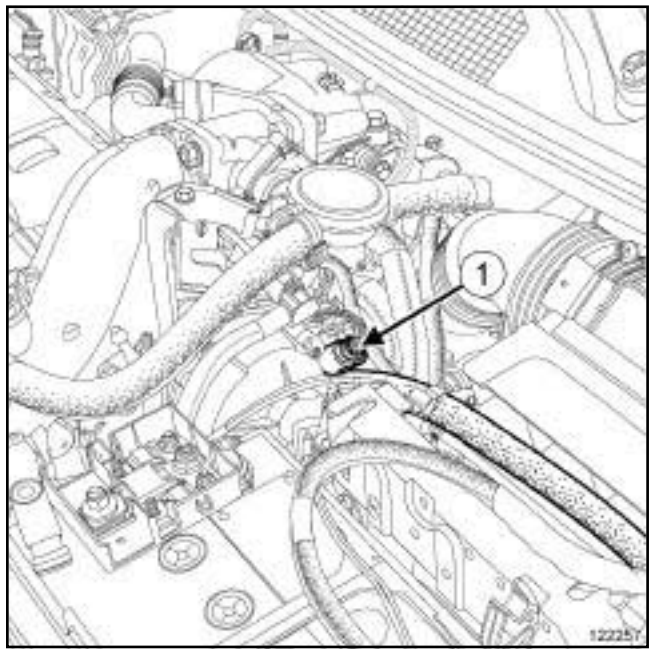

122257

❑ Disconnect the oxygen sensor connector (**1**) .

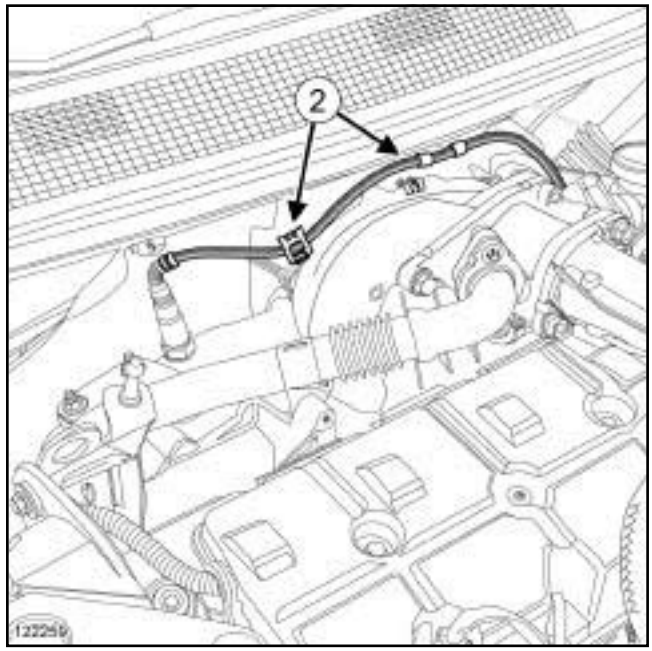

122259

❑ Unclip the oxygen sensor wiring (**2**) .

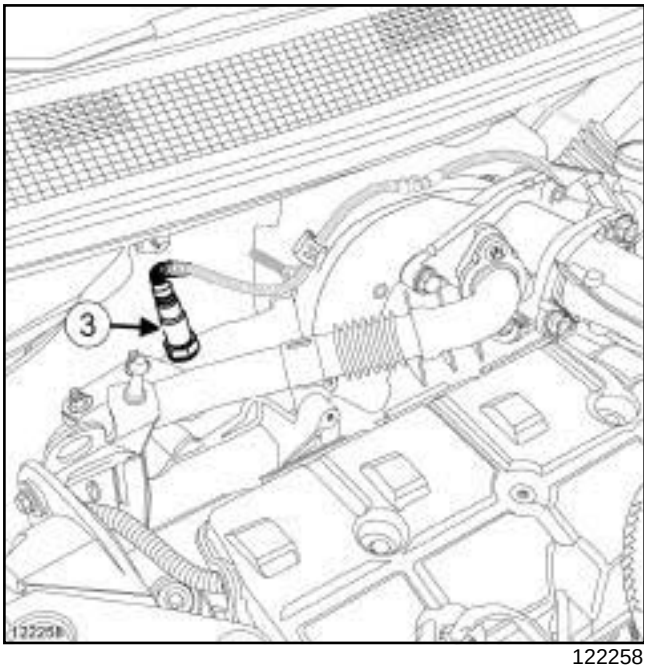

122258

❑ Remove the oxygen sensor (**3**) using the **(Mot. 1495-01)**.

REFITTING

I - REFITTING OPERATION FOR PART CONCERNED

❑ Torque tighten the **oxygen sensor (60 N.m)** using the **(Mot. 1495-01)**.

❑ Clip the oxygen sensor wiring onto the exhaust manifold.

❑ Connect the oxygen sensor connector.

II - FINAL OPERATION

❑ Refit:

- the scuttle panel grille (see **Scuttle panel grille: Removal - Refitting**) (56A, Exterior equipment),
- the engine cover.

Fuel temperature sensor: Removal - Refitting

B84 or C84 or G84 or S84, and K9K, and 722

Essential equipment
diagnostic tool

Tightening torques ▽	
diesel temperature sensor	**15 Nm**
battery cover mounting bolts	**4 Nm**

IMPORTANT

Before carrying out any work on the injection system, check using the CLIP **diagnostic tool** :

• that the injector rail is not under pressure,

• that the fuel temperature is not too high.

- Every time work is carried out, it is essential to follow the safety and cleanliness instructions outlined in this document.
- Loosening a high pressure pipe union when the engine is running is strictly prohibited.

WARNING

- Obtain a set of special high pressure injection circuit plugs.
- Always replace any high pressure pipe and high pressure pipe clips that have been removed.

WARNING

Torque tighten (**38 Nm**) the high pressure pipes on the « pump and rail » and « rail and injectors » with one of the following part numbers:

- **77 01 207 025**,
- **77 01 207 026**,
- **77 01 207 027**,
- **77 01 207 028**,
- **77 01 207 029**.

For high pressure pipes with different part numbers, tighten to a torque of **24 Nm**.

WARNING

Before starting work on the vehicle, obtain:

- a new set of blanking plugs (part no.: **77 01 206 804**),
- cleaning cloths (part no.: **77 11 211 707**),
- cleaning product (part no.: **77 11 224 188**).

REMOVAL

❑ Disconnect the battery (see **Battery : Removal - Refitting**) (MR 364, 80A, Battery).

❑ Remove the engine covers.

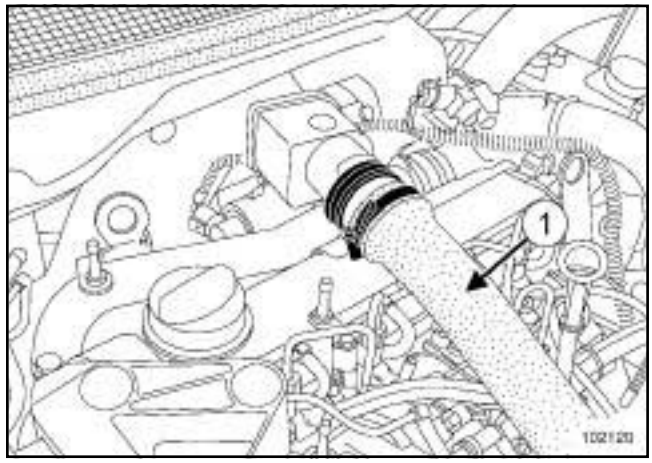

102120

❑ Disconnect air inlet duct (**1**) .

B84 or C84 or G84 or S84, and K9K, and 722

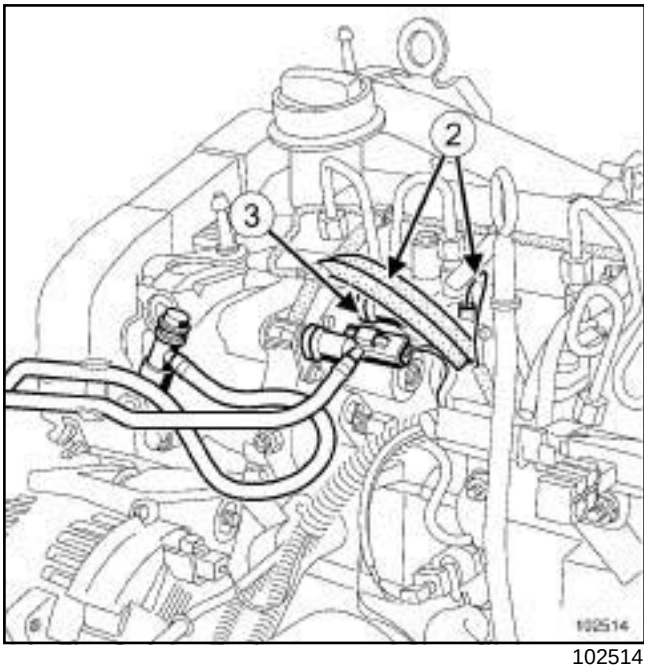

102514

❑ Disconnect:

- the heater plugs from cylinders no. 3 and 4,
- the injectors (**2**) from cylinders no. 3 and 4,
- the connector (**3**) from the diesel temperature sensor.

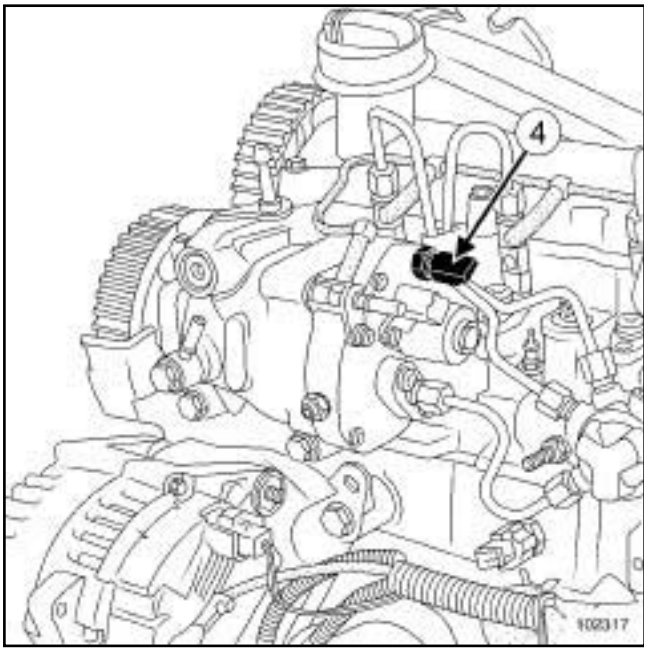

102317

❑ Clean the sensor (see **13B**, **Diesel injection**, **Diesel injection: Precautions for repair**, page **13B-12**) .

❑ Remove the diesel temperature sensor (**4**) .

❑ Fit plugs into the openings.

REFITTING

❑

> **WARNING**
> Do not remove the blanking plugs from each component until the last moment.

❑ Lubricate the O-ring with lubricant from the applicator supplied with the new part.

> **WARNING**
> Do not damage the O-ring when refitting.

❑ Fit the diesel fuel temperature sensor.

❑ Tighten to torque the **diesel temperature sensor (15 Nm)**.

❑ Reconnect the electrical connector.

❑ Connect the battery (see **Battery : Removal - Refitting**) (MR 364, 80A, Battery).

❑ Torque tighten the **battery cover mounting bolts (4 Nm)**.

❑ Check the sealing after repair work (see **13B**, **Diesel injection**, **High pressure pipe: Checking**, page **13B-157**) .

> **WARNING**
>
> Check that there are no diesel leaks:
>
> - let the engine run at idle speed until the engine cooling fan starts to operate,
> - accelerate several times at no load,
> - switch off the ignition,
> - check that there is no diesel fuel escaping.

Fuel temperature sensor: Removal - Refitting

B84 or C84 or G84 or S84, and K9K, and 728 or 729

Essential equipment
diagnostic tool

Tightening torques ▽	
diesel temperature sensor	**15 Nm**
battery cover mounting bolts	**4 Nm**

IMPORTANT

Before carrying out any work on the injection system, check using the CLIP **diagnostic tool** :

• that the injector rail is not under pressure,

• that the fuel temperature is not too high.

- Every time work is carried out, it is essential to follow the safety and cleanliness instructions outlined in this document.
- Loosening a high pressure pipe union when the engine is running is strictly prohibited.

WARNING

- Obtain a set of special high pressure injection circuit plugs.
- Always replace any high pressure pipe and high pressure pipe clips that have been removed.

WARNING

Torque tighten (**38 Nm**) the high pressure pipes on the « pump and rail » and « rail and injectors » with one of the following part numbers:

- **77 01 207 025**,
- **77 01 207 026**,
- **77 01 207 027**,
- **77 01 207 028**,
- **77 01 207 029**.

For high pressure pipes with different part numbers, tighten to a torque of **24 Nm**.

WARNING

Before starting work on the vehicle, obtain:

- a new set of blanking plugs (part no.: **77 01 206 804**),
- cleaning cloths (part no.: **77 11 211 707**),
- cleaning product (part no.: **77 11 224 188**).

REMOVAL

❑ Disconnect the battery (see **Battery : Removal - Refitting**) (MR 364, 80A, Battery).

❑ Remove the engine covers.

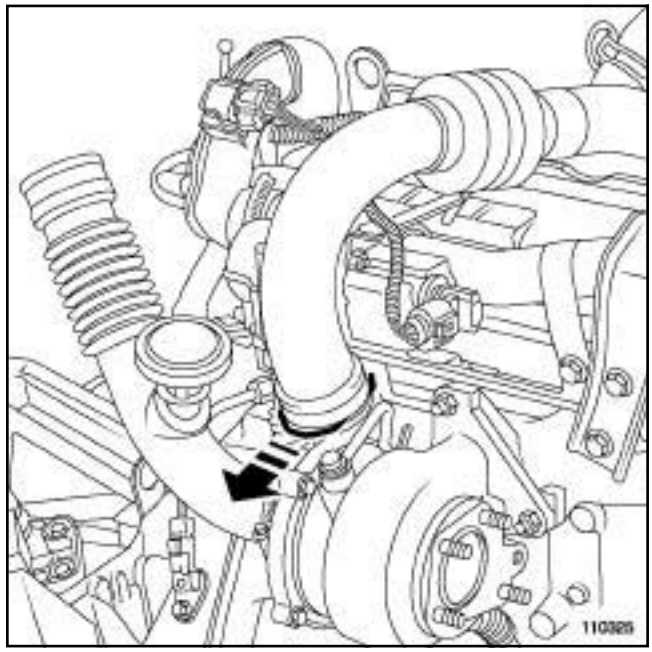

110325

❑ Pull the clip.

B84 or C84 or G84 or S84, and K9K, and 728 or 729

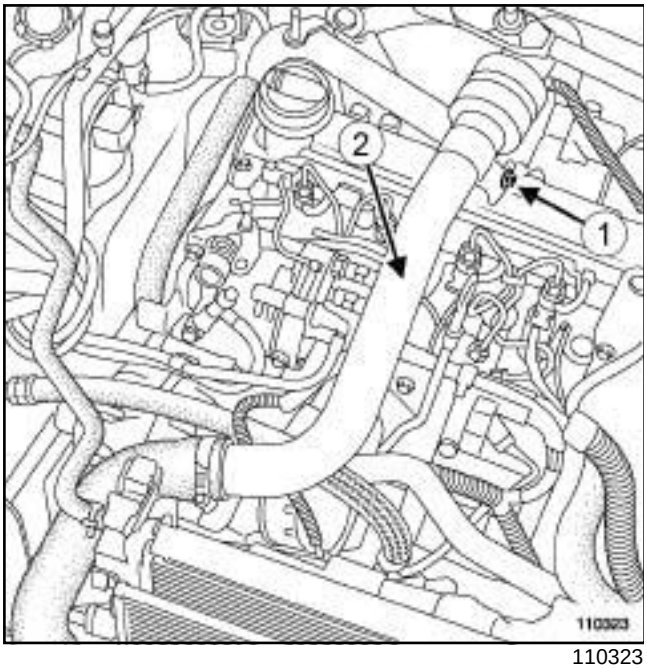

110323

❑ Unscrew bolt (**1**)

❑ Remove the air duct (**2**) .

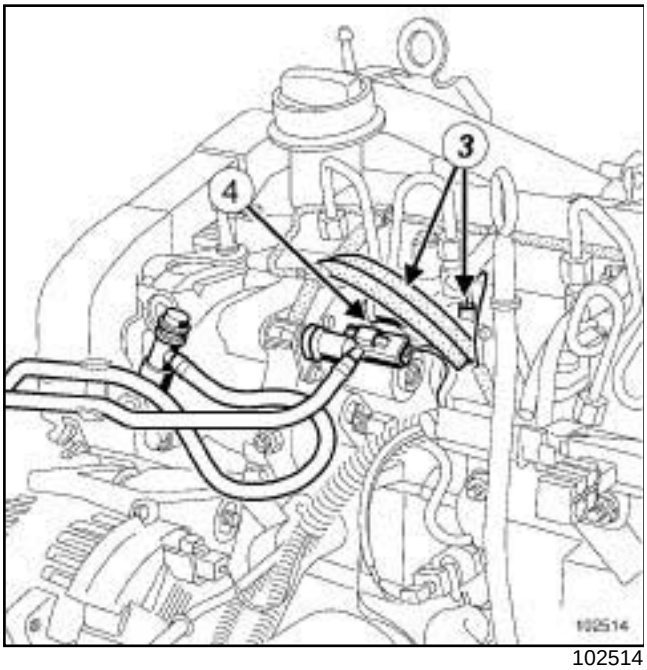

102514

❑ Disconnect:

- the heater plugs from cylinders no. 3 and 4,
- the injectors (**3**) from cylinders no. 3 and 4,
- the connector (**4**) from the diesel temperature sensor.

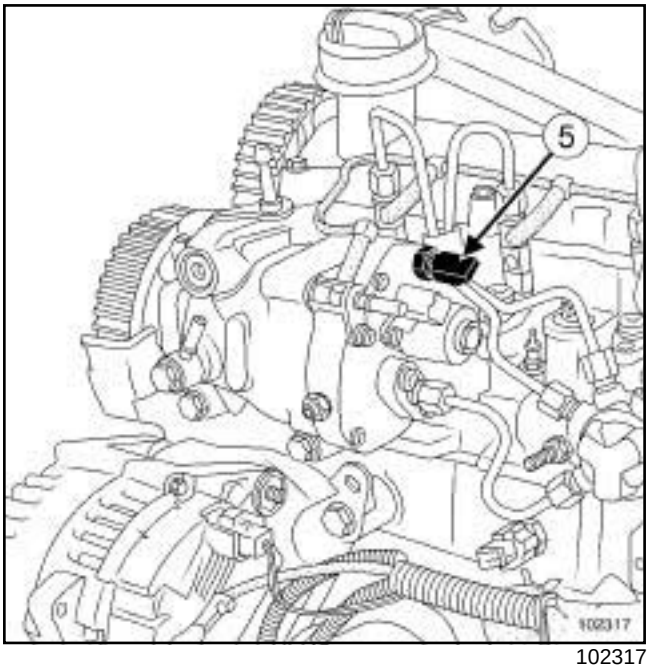

102317

❑ Clean the sensor (see **13B**, **Diesel injection**, **Diesel injection: Precautions for repair**, page **13B-12**) .

❑ Remove the diesel temperature sensor (**5**) .

❑ Fit plugs into the openings.

REFITTING

❑

> **WARNING**
> Do not remove the blanking plugs from each component until the last moment.

❑ Lubricate the O-ring with lubricant from the applicator supplied with the new part.

> **WARNING**
> Do not damage the O-ring when refitting.

❑ Fit the diesel fuel temperature sensor.

❑ Tighten to torque the **diesel temperature sensor (15 Nm)**.

❑ Reconnect the electrical connector.

❑ Connect the battery (see **Battery : Removal - Refitting**) (MR 364, 80A, Battery).

❑ Torque tighten the **battery cover mounting bolts (4 Nm)**.

B84 or C84 or G84 or S84, and K9K, and 728 or 729

❑ Check the sealing after repair work (see **13B**, **Diesel injection**, **High pressure pipe: Checking**, page **13B-157**) .

WARNING

Check that there are no diesel leaks:

- let the engine run at idle speed until the engine cooling fan starts to operate,
- accelerate several times at no load,
- switch off the ignition,
- check that there is no diesel fuel escaping.

B84 or C84 or G84 or S84, and K9K, and 732 or 734

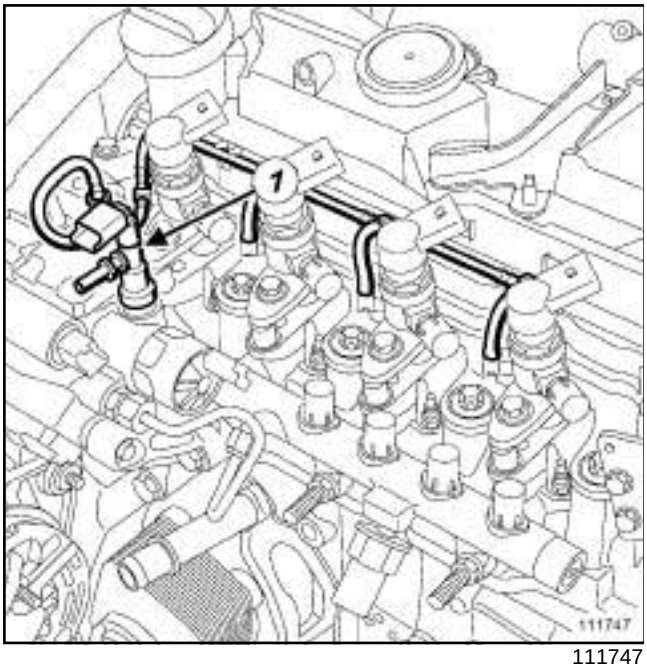

111747

The diesel temperature sensor (**1**) is attached to the diesel injector fuel return rail.

Replace the "diesel injector fuel return rail and diesel temperature sensor" assembly if there is a fault with the diesel temperature sensor (see **13B**, **Diesel injection**, **Diesel injector fuel return rail: Removal - Refitting**, page **13B-148**) .

Fuel temperature sensor: Removal - Refitting

K9K, and 724

Essential equipment
diagnostic tool

Tightening torques ▽	
diesel temperature sensor	**15 N.m**

IMPORTANT

Before carrying out any work on the injection system, check using the CLIP **diagnostic tool** :

- that the injector rail is not under pressure,

- that the fuel temperature is not too high.

It is essential to respect the safety and cleanliness advice whenever work is carried out on this system.

Loosening a high pressure pipe union when the engine is running is strictly prohibited.

WARNING

Torque tighten (**38 N.m**) the high pressure pipes on the « pump and rail » and « rail and injectors » with one of the following part numbers:

- **77 01 207 025**,

- **77 01 207 026**,

- **77 01 207 027**,

- **77 01 207 028**,

- **77 01 207 029**,

For high pressure pipes with different part numbers, tighten to a torque of **24 N.m**.

WARNING

Before starting work on the vehicle, obtain:

- a new blanking plug kit (**PART NO. 77 01 206 804**),

- cleaning cloths (**PART NO.77 11 211 707**).

Always read the repair precautions before carrying out any work (see **13B**, **Diesel injection**, **Diesel injection: Precautions for repair**, page **13B-12**) .

REMOVAL

I - REMOVAL PREPARATION OPERATION

❑ Disconnect the battery (see **Battery : Removal - Refitting**) (80A, Battery).

❑ Remove the engine protector.

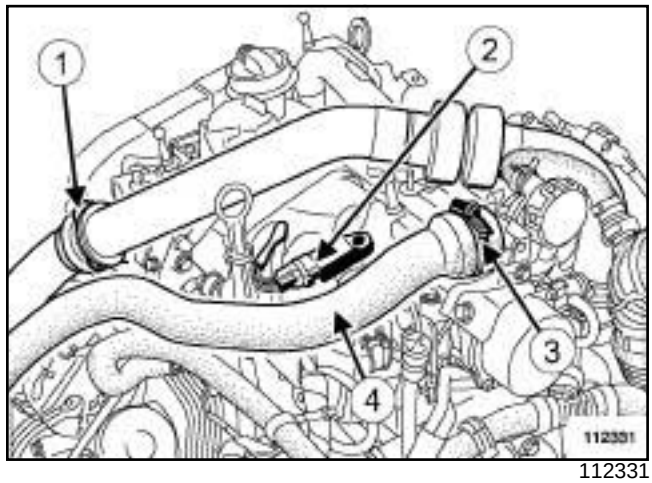

112331

❑ Remove the pin securing the turbocharging duct on the turbocharger (**1**) .

❑ Remove the bolt mounting the pipe on the cylinder head.

❑ Move the duct to one side.

❑ Disconnect the inlet air pressure sensor (**2**)

❑ Loosen the clip (**3**) .

❑ Move the inlet air duct to one side (**4**) .

K9K, and 724

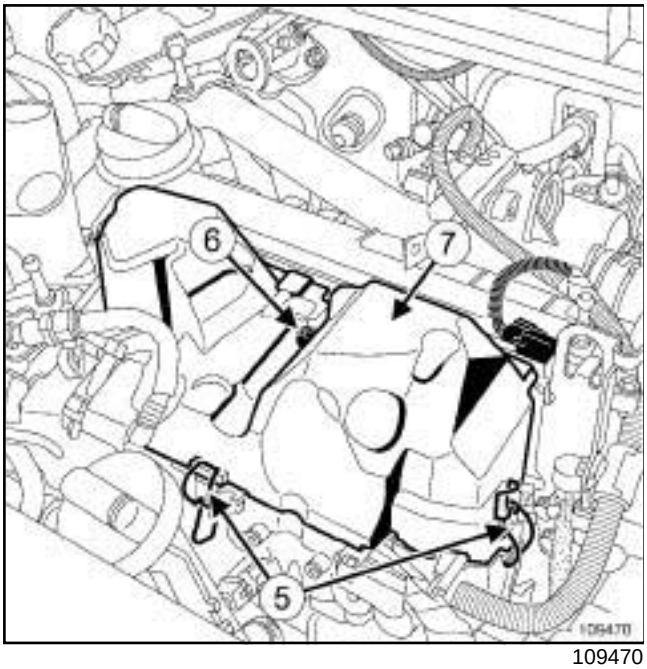

109470

❑ Remove:

- the dipstick,
- the dipstick pipe mounting bolts.

❑ Move the dipstick duct to one side.

❑ Unclip the clips (**5**) from the injector rail protector.

❑ Remove:

- the mounting bolt (**6**) from the injector rail protector,
- the injector rail protector (**7**) .

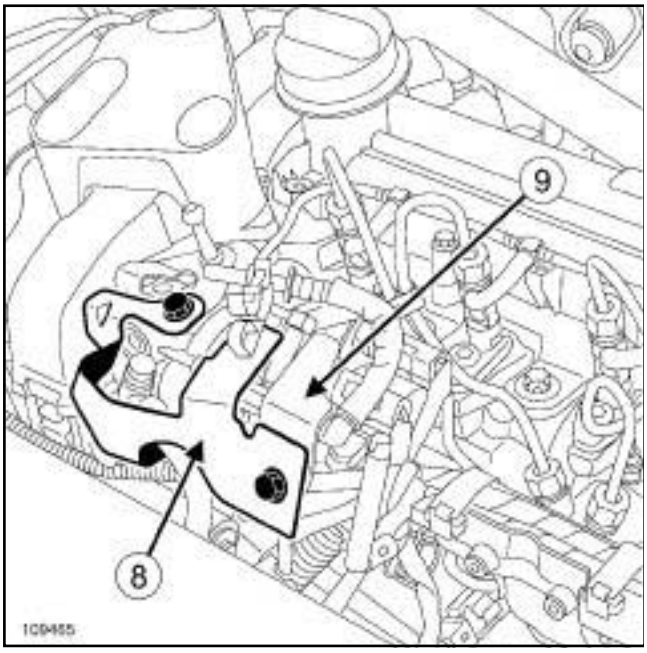

109465

❑ Remove the high pressure pump protectors (**8**) and (**9**) .

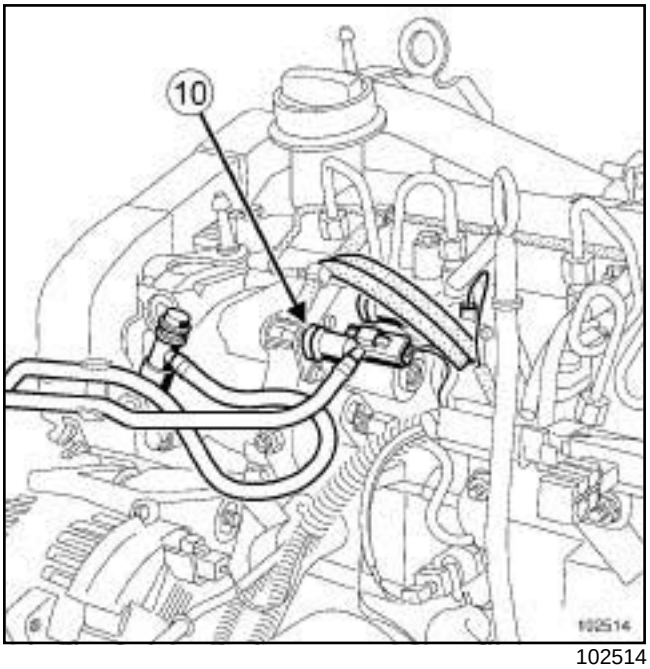

102514

❑ Clean the pipes (see **13B**, **Diesel injection**, **Diesel injection: Precautions for repair**, page **13B-12**) .

❑ Disconnect the diesel supply and return pipes (**10**) .

> Note:
>
> Make preparations for fuel outflow. Clean with new cloths.

❑ Fit the correct blanking plugs.

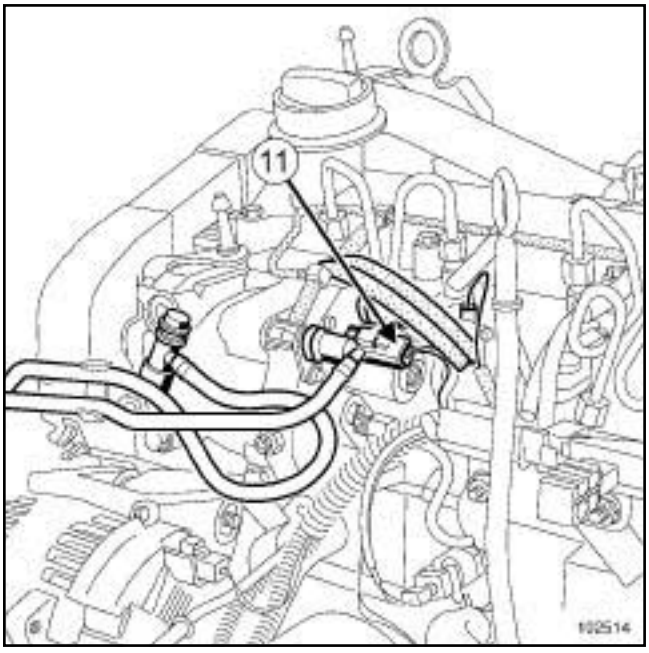

102514

❑ Disconnect the diesel temperature sensor connector (**11**) .

K9K, and 724

II - REMOVAL OF THE PART CONCERNED

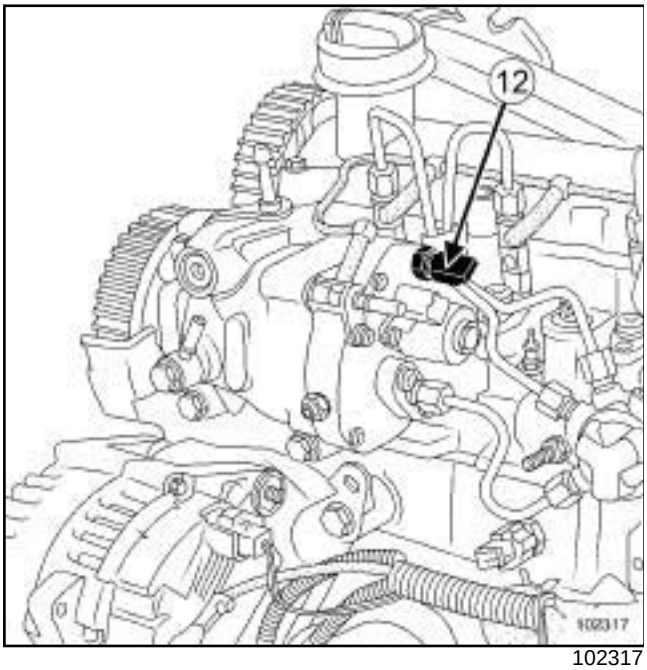

102317

- ❑ Clean the diesel temperature sensor
- ❑ Remove the diesel temperature sensor (**12**) .

REFITTING

I - REFITTING PREPARATION OPERATION

- ❑ Lubricate the O-ring with lubricant from the applicator supplied with the new part.

> Note:
>
> Do not lubricate the diesel temperature sensor seals with grease or used diesel. Use the applicator supplied with the kit.

> **WARNING**
>
> Do not damage the O-ring when refitting.
>
> Do not remove the blanking plugs from each component until the last moment.

II - REFITTING PART CONCERNED

- ❑ Refit the diesel temperature sensor.
- ❑ Tighten to torque the **diesel temperature sensor (15 N.m)**.

III - FINAL OPERATION

- ❑ Connect:
  - the diesel temperature sensor connector,
  - the diesel supply and return pipes.
- ❑ Refit:
  - the high pressure pump protectors,
  - the injector rail protector.
- ❑ Refit the air inlet duct and tighten the clip.
- ❑ Connect the inlet air pressure sensor.
- ❑ Fit the turbocharger air duct.
- ❑ Lock the air duct onto the turbocharger and the intercooler inlet air pipe.
- ❑ Tighten the bolt of the air duct on the rocker cover.
- ❑ Refit the engine undertray.
- ❑ Connect the battery (see **Battery : Removal - Refitting**) (80A, Battery).
- ❑ Check the sealing after repair work (see **13B**, **Diesel injection**, **High pressure pipe: Checking**, page **13B-157**) .

> **WARNING**
>
> Check that there are no diesel leaks:
>
> - let the engine run at idle speed until the engine cooling fan starts to operate,
> - accelerate several times at no load,
> - switch off the ignition,
> - check that there is no diesel fuel escaping.

K9K, and 724

Fuel temperature sensor: Removal - Refitting

B84 or C84 or G84 or S84, and F9Q, and 800 or 808

IMPORTANT

Consult the safety and cleanliness advice and operation recommendations before carrying out any repair (see **13B**, **Diesel injection**, **Diesel injection: Precautions for repair**, page **13B-12**) .

The temperature sensor is integrated into the diesel return pipe.

If the diesel temperature sensor needs replacing, the diesel return pipe must also be replaced.

REMOVAL

I - REMOVAL PREPARATION OPERATION

❏ Disconnect the battery (see **Battery: Removal - Refitting**) (MR 364, 80A, Battery).

❏ Remove the front engine cover.

II - OPERATION FOR REMOVAL OF PART CONCERNED

❏ Remove the fuel return pipe (see **13B**, **Diesel injection**, **Diesel return pipe: Removal - Refitting**, page **13B-140**) .

REFITTING

I - REFITTING OPERATION FOR PART CONCERNED

❏ Refit the fuel return pipe (see **13B**, **Diesel injection**, **Diesel return pipe: Removal - Refitting**, page **13B-140**) .

II - FINAL OPERATION.

❏ Connect the battery (see **Battery: Removal - Refitting**) (MR 364, 80A, Battery).

❏ Refit the engine cover.

B84 or C84 or E84 or K84 or L84, and M9R

Essential equipment
tweezers

Note:

The temperature sensor is an integral part of the diesel supply pipe.

IMPORTANT

Consult the safety and cleanliness advice and operation recommendations before carrying out any repair (see **13B**, **Diesel injection**, **Diesel injection: Precautions for repair**, page **13B-12**) .

IMPORTANT

During this operation, be sure to:

- refrain from smoking or bringing red hot objects close to the working area,
- be careful of fuel splashes when disconnecting the union.

REMOVAL

I - REMOVAL PREPARATION OPERATION

❏ Position the vehicle on a two-post lift (see **Vehicle: Towing and lifting**) (MR 364, 02A, Lifting equipment).

❏ Disconnect the battery (see **Battery: Removal - Refitting**) (MR 364, 80A, Battery).

❏ Remove the front engine cover.

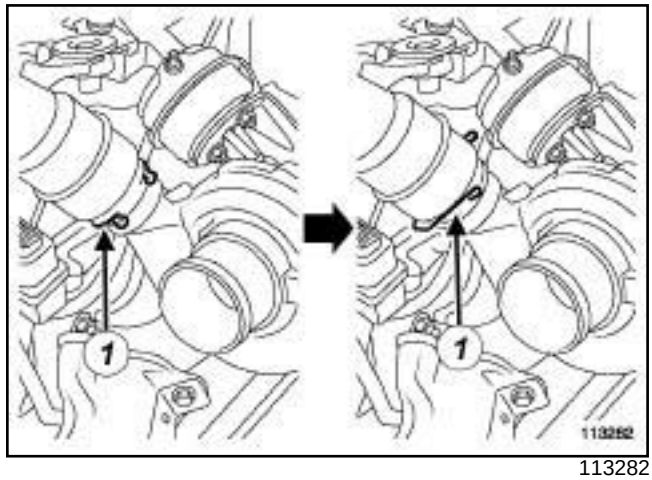

113282

❏ Rotate the intercooler air inlet pipe clip (**1**) .

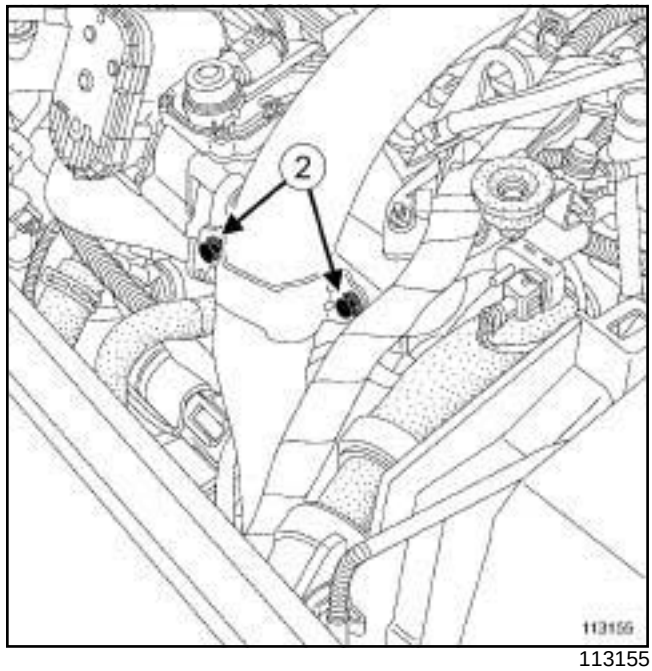

113155

❏ Remove the intercooler air inlet pipe bolts (**2**) .

❏ Move the intercooler inlet air pipe to one side.

❏ Remove:

- the front right-hand wheel (see **Wheel: Removal - Refitting**) (MR 364, 35A, Wheels and tyres),
- the front right-hand wheel arch liner (see **Front wheel arch liner: Removal - Refitting**) (MR 365, 55A, Exterior protection).

B84 or C84 or E84 or K84 or L84, and M9R

II - OPERATION FOR REMOVAL OF PART CONCERNED

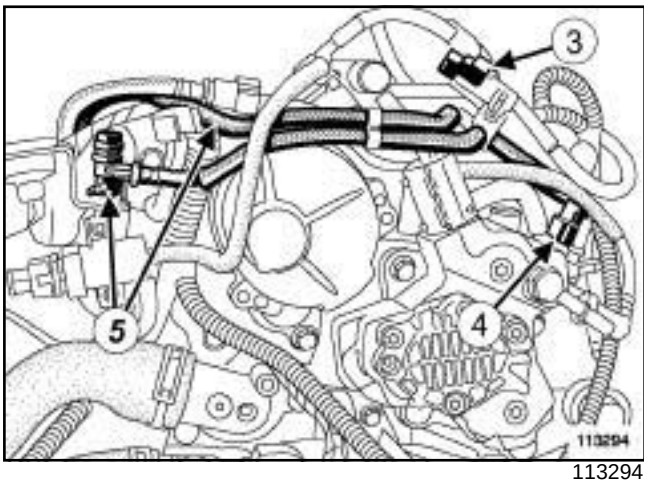

113294

- ❑ Disconnect the fuel temperature sensor connector (**3**) .
- ❑ Detach the fuel temperature sensor from its mounting.

> **IMPORTANT**
> Wear latex gloves during the operation.

- ❑ Disconnect the fuel supply pipe union (**4**) from the high pressure pump.

> Note:
> During this operation, it is necessary to mark the routing of the diesel supply pipe before removing it.

- ❑ Fit blanking plugs on the pipe unions and on the high pressure pump.
- ❑ Detach the pipe at (**5**) .

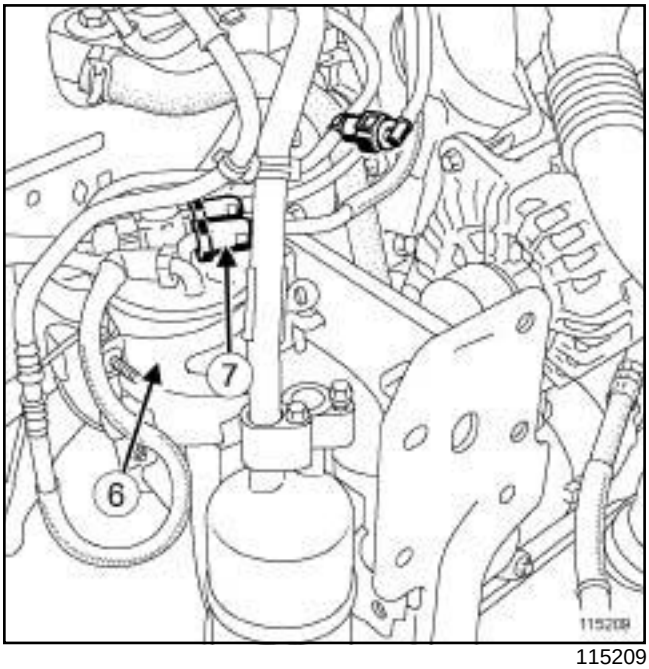

115209

- ❑ Raise the « fuel filter - metal support » (**6**) upwards.
- ❑ Disconnect the connection (**7**) from the fuel supply pipe on the fuel filter.
- ❑ Fit blanking plugs on the pipe union and the fuel filter.
- ❑ Remove the « fuel supply pipe and fuel temperature sensor » assembly.

REFITTING

I - REFITTING PREPARATIONS OPERATION

- ❑ Part always to be replaced:
  - the intercooler air inlet pipe seal.

B84 or C84 or E84 or K84 or L84, and M9R

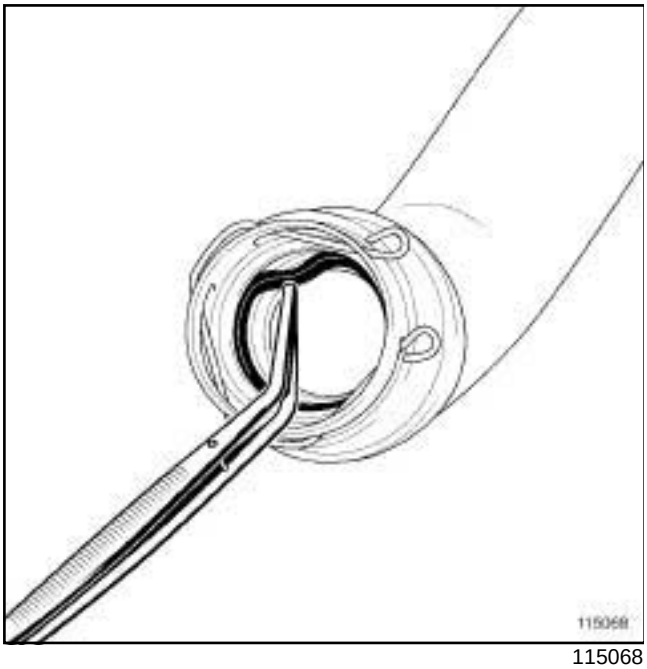

115068

❑ Remove the intercooler air inlet pipe seal using a **tweezers**.

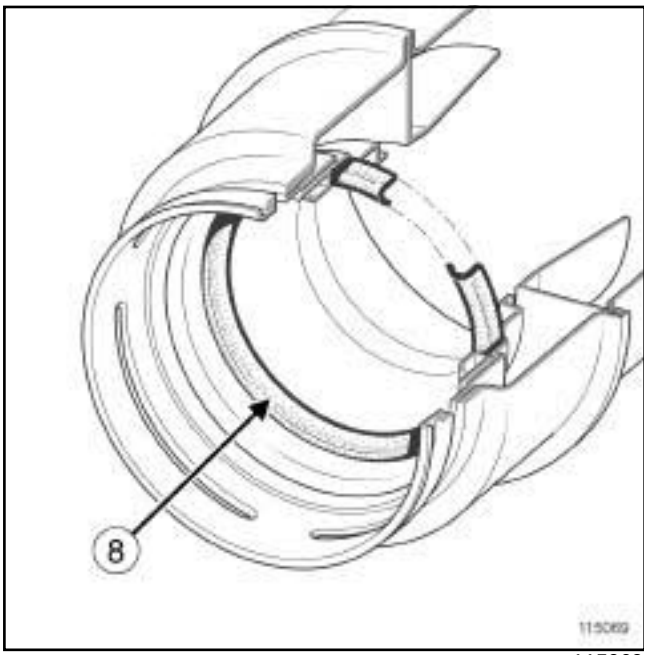

115069

❑ Refit the intercooler inlet air pipe seal (**8**) .

Note:

Check that the seal on the intercooler air inlet pipe is fitted the correct way round.

II - REFITTING OPERATION FOR PART CONCERNED

❑ Refit the « fuel supply pipe and fuel temperature sensor » assembly.

❑ Remove the blanking plugs from the pipe union and the fuel filter.

❑ Connect the fuel supply pipe union on the fuel filter.

❑ Fit the « fuel filter - metal support » assembly.

❑ Clip on the fuel supply pipe.

❑ Remove the blanking plugs from the pipe unions and from the high pressure pump.

❑ Connect the fuel supply pipe union on the high pressure pump,

❑ Attach the fuel temperature sensor to its mounting.

❑ Connect the fuel temperature sensor connector.

III - FINAL OPERATION.

❑ Refit:

- the front right-hand wheel arch liner (see **Front wheel arch liner: Removal - Refitting**) (MR 365, 55A, Exterior protection),
- the front right-hand wheel (see **Wheel: Removal - Refitting**) (MR 364, 35A, Wheels and tyres).

❑ Rotate the intercooler air inlet pipe to refit the clip in its recess.

❑ Clip on the intercooler air inlet pipe.

❑ Refit the intercooler air inlet pipe bolts.

❑ Connect the battery (see **Battery: Removal - Refitting**) (MR 364, 80A, Battery).

❑ Check that there are no fuel leaks.

❑ Refit the engine cover.

Leak flow from injectors: Check

K9K, and 722 or 728 or 729

Essential special tooling	
Mot. 1711	Kit for measuring injector leak rate.

- ❑ Remove the engine covers.
- ❑ Disconnect the battery (see **Battery: Removal - Refitting**) (80A, Battery).
- ❑ Connect the four transparent hoses of the **(Mot. 1711)** to the injectors instead of the injector fuel return pipes.
- ❑ Fit the correct blanking plugs, in particular onto the venturi pipe to prevent depriming the circuit.
- ❑ Insert these hoses in the four graduated measuring cylinders of the **(Mot. 1711)**.
- ❑ Connect the battery (see **Battery : Removal - Refitting**) (80A, Battery).

IMPORTANT

Do not leave any object (tools or other) on the side of the engine housing during the entire operation.

Position the tools so that they do not fall during the « engine running » phase of the test.

- ❑ Follow the procedures described in the Fault finding MR (see **Fault finding - Tests**) (13B, Diesel injection).
- ❑ Disconnect:
  - the battery (see **Battery: Removal - Refitting**) (80A, Battery),
  - the four transparent hoses of **(Mot. 1711)**.
- ❑ Remove the blanking plugs.
- ❑ Refit the injector fuel return pipes.
- ❑ Connect the battery (see **Battery : Removal - Refitting**) (80A, Battery).
- ❑ Refit the engine covers.

Leak flow from injectors: Check

K9K, and 732 or 734

Essential special tooling	
Mot. 1771	Kit for measuring SIEMENS injector leak rate.
Mot. 1711	Kit for measuring injector leak rate.

Tightening torques ▽	
intercooler outlet air pipe clip	**5.5 Nm**

❑ Switch off the ignition and wait **30 seconds** before starting work on the injection system.

❑ Remove the engine covers.

❑ Disconnect the battery (see **Battery: Removal - Refitting**) (MR 364, 80A, Battery).

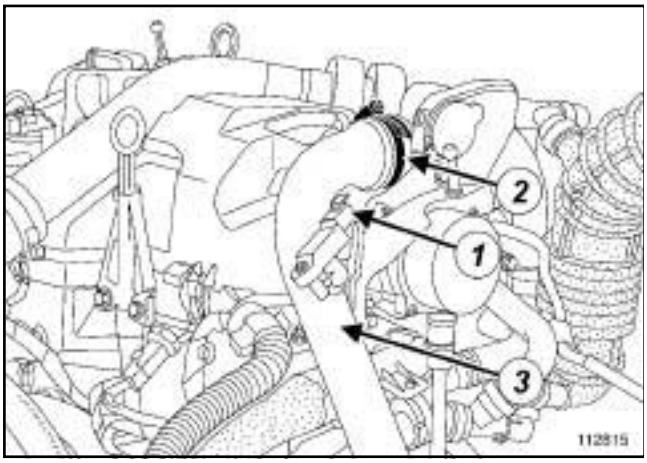

112815

❑ Disconnect the connector (**1**) from the inlet air pressure sensor.

❑ Undo the clip (**2**) from the intercooler outlet pipe.

❑ Move the intercooler outlet air pipe to one side (**3**) .

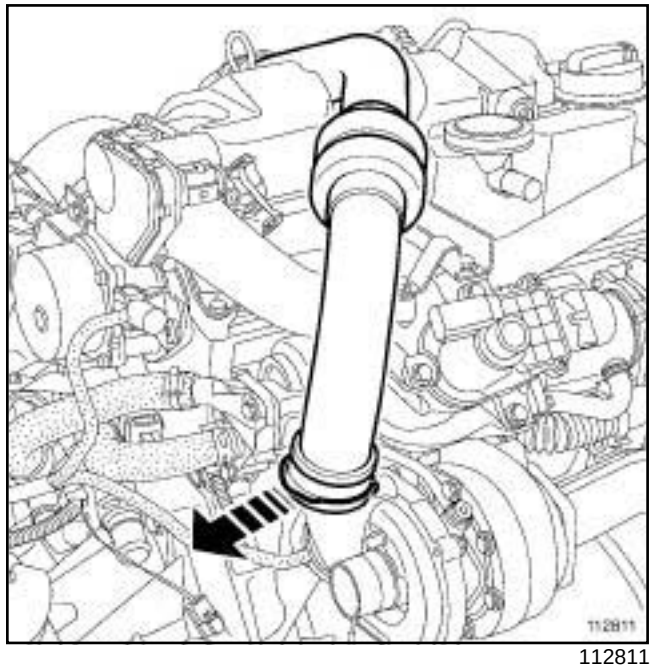

112811

❑ Pull the turbocharger air outlet pipe clip.

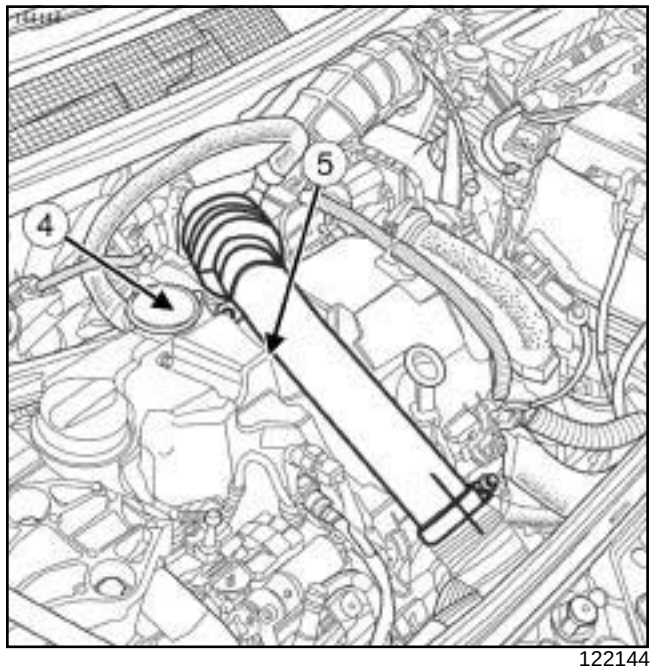

122144

❑ Remove the turbocharger air outlet pipe bolt (**4**) .

❑ Move aside the turbocharger air outlet pipe (**5**) .

K9K, and 732 or 734

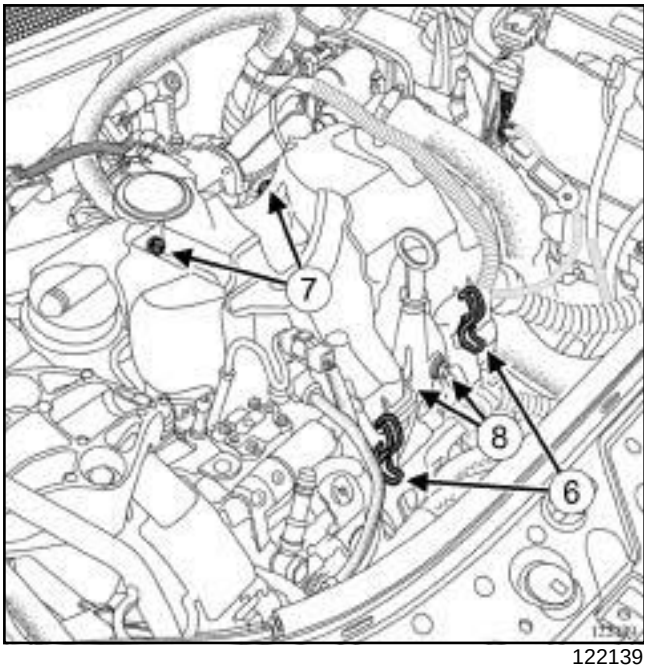

122139

❑ Unclip the injector rail protector cover at (**6**) .

❑ Remove:

- the injector rail protector cover bolt and nut (**7**) ,
- the injector rail protector cover,
- the dipstick,
- the dipstick duct bolts (**8**) .

❑ Move the dipstick duct to one side.

❑ Disconnect the four diesel injector fuel return pipes from the four injectors (see **13B**, **Diesel injection**, **Diesel injector fuel return rail: Removal - Refitting**, page **13B-148**) .

❑ Connect the transparent hoses of the **(Mot. 1771)** to the injectors instead of the diesel injector fuel return pipes.

❑ Place the correct blanking plug on the diesel injector fuel return connectors.

❑ Insert these hoses in the four graduated measuring cylinders of the **(Mot. 1711)**.

❑ Refit:

- the dipstick duct bolts,
- the dipstick.

❑ Push the clip on the turbocharger air outlet pipe.

❑ Clip the turbocharger air outlet pipe onto the turbocharger.

❑ Refit the intercooler outlet air pipe clip on the damper valve.

❑ Tighten the **intercooler outlet air pipe clip (5.5 Nm)**.

❑ Connect:

- the air inlet pressure sensor connector,
- the battery (see **Battery: Removal - Refitting**) (MR 364, 80A, Battery).

IMPORTANT

Do not leave any object (tools or other) on the side of the engine housing during the entire operation.

Position the tools so that they do not fall during the « engine running » phase of the test.

❑ Follow the procedures described in the Fault finding MR (see **Fault finding - Tests**) (MR 366, 13B, Diesel injection).

❑ Disconnect:

- the battery (see **Battery: Removal - Refitting**) (MR 364, 80A, Battery),
- the air inlet pressure sensor connector.

❑ Undo the clip from the intercooler outlet pipe.

❑ Move the intercooler outlet air pipe to one side.

❑ Pull the turbocharger air outlet pipe clip.

❑ Move aside the turbocharger air outlet pipe.

❑ Remove:

- the dipstick,
- the dipstick tube bolts.

❑ Move the dipstick duct to one side.

❑ Disconnect the four transparent pipes from **(Mot. 1771)**.

❑ Remove the correct blanking plug from the diesel injector fuel return connectors.

❑ Connect the four diesel injector fuel return pipes to the four injectors (see **13B**, **Diesel injection**, **Diesel injector fuel return rail: Removal - Refitting**, page **13B-148**) .

❑ Refit:

- the dipstick duct bolts,
- the dipstick,
- the injector rail protector cover,
- the injector rail protector cover bolt and nut.

❑ Clip the injector rail protector cover into place.

❑ Push the clip on the turbocharger air outlet pipe.

K9K, and 732 or 734

- ❑ Clip the turbocharger air outlet pipe onto the turbocharger.
- ❑ Refit:
  - the turbocharger air outlet pipe bolt,
  - the intercooler air outlet pipe on the damper valve.
- ❑ Tighten the **intercooler air outlet pipe clip (5.5 Nm)**.
- ❑ Connect:
  - the air inlet pressure sensor connector,
  - the battery (see **Battery : Removal - Refitting**) (MR 364, 80A, Battery).
- ❑ Reprime the fuel circuit with the manual priming pump.
- ❑ Refit the engine covers.

K9K, and 724

Essential special tooling	
Mot. 1711	Kit for measuring injector leak rate.

Essential equipment
diagnostic tool

IMPORTANT
To avoid all risk of damage to the systems, apply the safety and cleanliness instructions and operation recommendations before carrying out any repair (see **13B**, **Diesel injection**, **Diesel injection: Precautions for repair**, page **13B-12**) .

IMPORTANT
Wear leaktight gloves (Nitrile type) for this operation.

CHECKING

I - PREPARATION OPERATION FOR CHECK

❑ Remove the front engine cover.

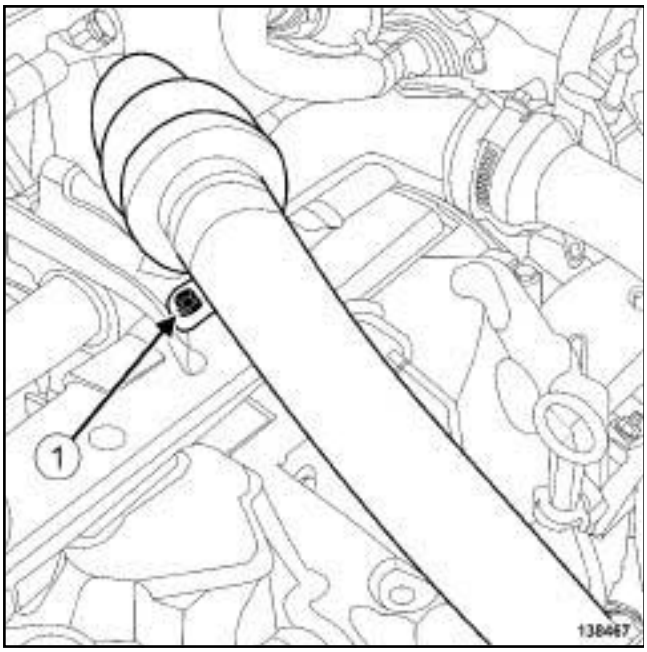

138467

❑ Remove the bolt (**1**) on the intercooler air inlet pipe.

123299

❑ Pull the clip (**2**) from the intercooler inlet air pipe.

❑ Move aside the intercooler air inlet pipe.

K9K, and 724

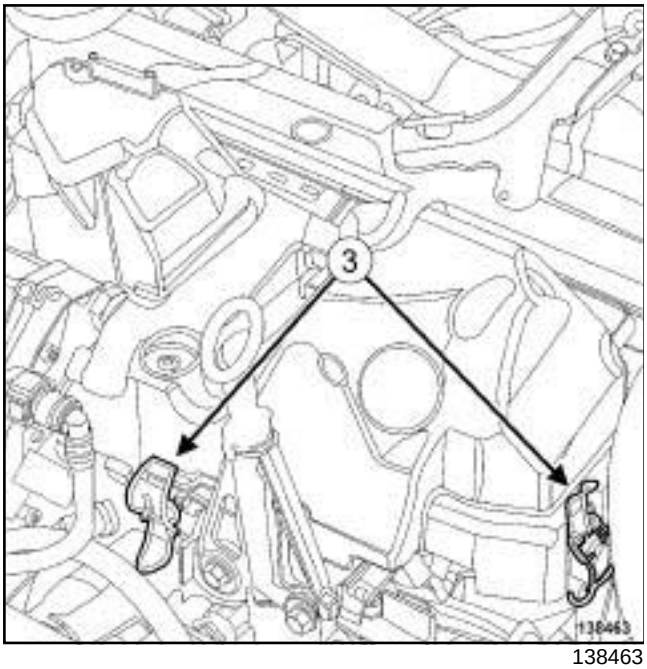

138463

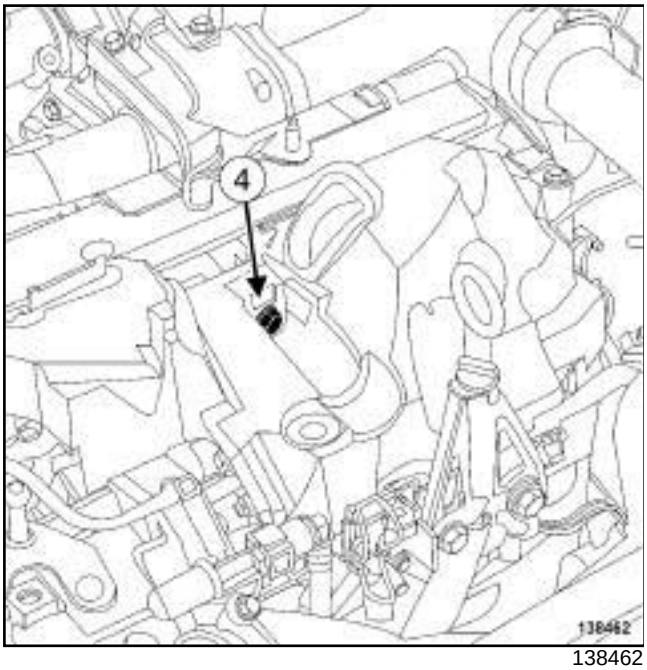

138462

❑ Unclip the injector rail protector cover at (**3**) .

❑ Remove:

- the injector rail protector cover bolt (**4**) ,
- the injector rail protector.

II - TEST OPERATION

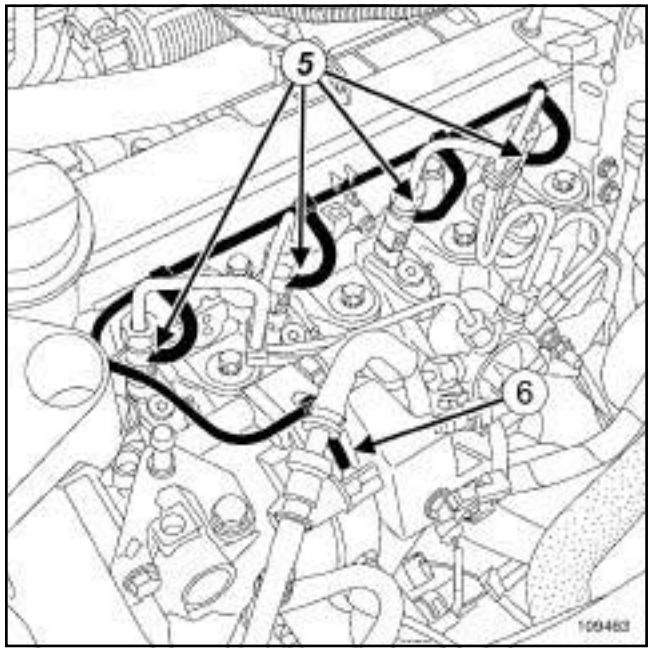

109463

❑ Disconnect:

- the fuel return pipes (**5**) on the injectors,
- the fuel return pipe (**6**) on the high pressure pump.

❑ Fit blanking plugs.

Note:

It is essential to fit an appropriate blanking plug to the Venturi to avoid depriming the diesel circuit.

K9K, and 724

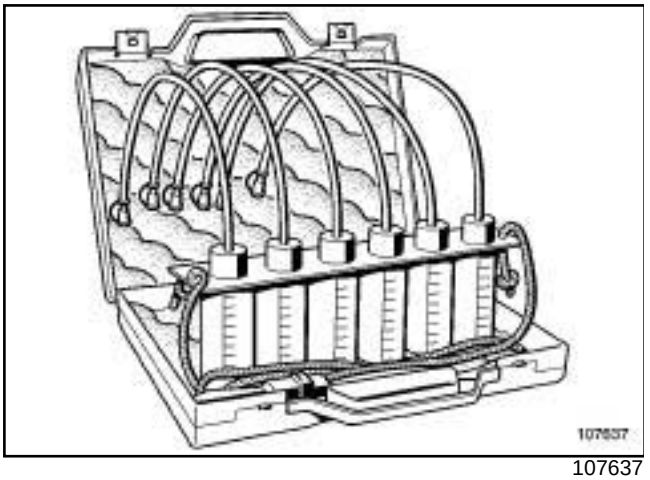

107637

- ❑ Connect the transparent pipes of the **(Mot. 1711)** onto the diesel injector return.
- ❑ Insert these pipes in the four graduated measuring cylinders of the **(Mot. 1711)**.

> Note:
>
> If necessary, attach the graduated measuring cylinder rail of the **(Mot. 1711)** to the bonnet.

- ❑ Refit the intercooler air inlet pipe.
- ❑ Fit the clip of the intercooler air inlet pipe.
- ❑ Check the leak flow of the injectors following the described method **Test 10** in the fault finding repair manual (see **Fault finding - Tests**) (13B, Diesel injection).
- ❑ Disconnect the transparent pipes from the **(Mot. 1711)**.
- ❑ Remove the transparent pipes from the graduated measuring cylinder of the **(Mot. 1711)**.
- ❑ Empty the measuring cylinders of the contained fuel.
- ❑ Remove the blanking plugs.
- ❑ Connect:
  - the fuel return pipes on the injectors,
  - the fuel return pipe to the high pressure pump.
- ❑ Replace the faulty injector(s) (see **13B**, **Diesel injection**, **Diesel injector: Removal - Refitting**, page **13B-258**) .
- ❑ Check that there are no fuel leaks.
- ❑ Connect the **diagnostic tool**.
- ❑ Using the diagnostic tool, check that there are no stored faults; deal with these and clear them as necessary.
- ❑ Disconnect the diagnostic tool.
- ❑ Pull the clip from the intercooler air inlet pipe.
- ❑ Move aside the intercooler air inlet pipe.

III - FINAL OPERATION

- ❑ Refit the injector rail protector cover.
- ❑ Clip on the injector rail protector cover.
- ❑ Refit the intercooler air inlet pipe.
- ❑ Fit the clip of the intercooler air inlet pipe.
- ❑ Refit the engine cover.

Diesel injector: Removal - Refitting

B84 or C84 or G84 or S84, and K9K, and 722 or 728 or 729

Essential special tooling	
Mot. 1817	Injector well cleaning kit

Essential equipment
diagnostic tool

Tightening torques	
injector clamp	**28 N.m**
nuts on the neck on the rail	**21 N.m**

IMPORTANT

Before any operation on the injection circuit, use the **diagnostic tool** to check that the injector rail is no longer under pressure, and that the fuel temperature is not too high.

It is essential to respect the safety and cleanliness advice specified in this document whenever work is carried out on this system.

Loosening a high pressure pipe union when the engine is running is strictly prohibited.

WARNING

Torque tighten (**38 N.m**) the high pressure pipes on the « pump and rail » and « rail and injectors » with one of the following part numbers:

- **77 01 207 025**,
- **77 01 207 026**,
- **77 01 207 027**,
- **77 01 207 028**,
- **77 01 207 029**.

For high pressure pipes with different part numbers, tighten to a torque of **24 N.m**.

IMPORTANT

To avoid all risk of damage to the systems, apply the safety and cleanliness instructions and operation recommendations before carrying out any repair (see **13B**, **Diesel injection**, **Diesel injection: Precautions for repair**, page **13B-12**) .

WARNING

Before starting work on the vehicle, obtain:

- a new set of blanking plugs (part no.: **77 01 206 804**),
- cleaning cloths (part no.: **77 11 211 707**),
- cleaning product (part no.: **77 11 224 188**).

REMOVAL

I - REMOVAL PREPARATION OPERATION

❑ Remove the engine protector.

❑ Disconnect the battery (see **Battery: Removal - Refitting**) (80A, Battery).

❑ Disconnect:

- the heater plugs,
- the injector connectors,
- the injector connectors.

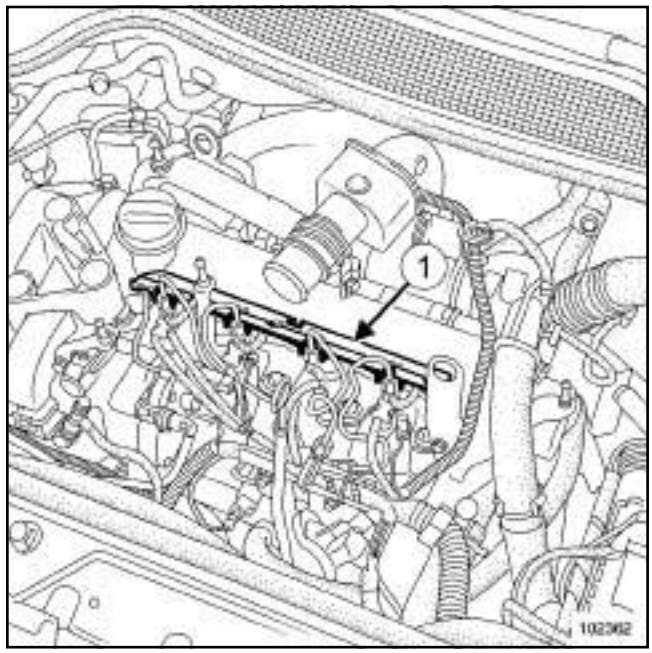

102362

❑ Remove the diesel fuel splash plate (**1**) .

B84 or C84 or G84 or S84, and K9K, and 722 or 728 or 729

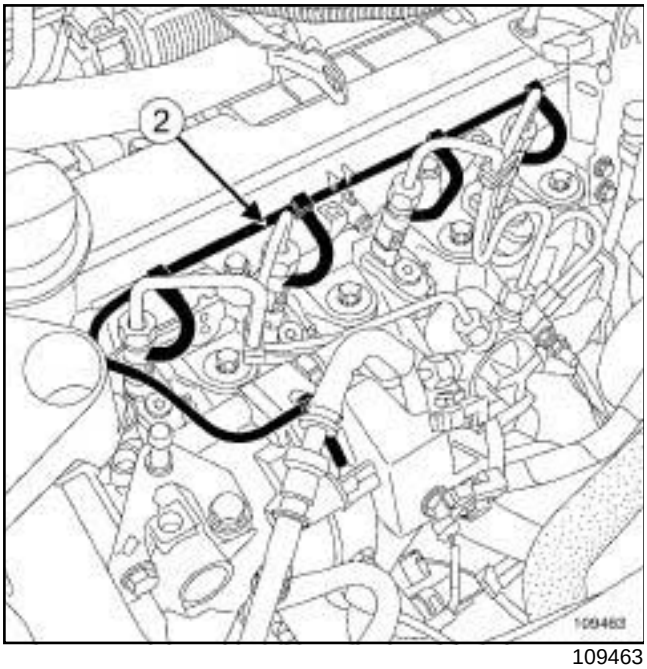

109463

- ❑ Disconnect the injector diesel return pipe (**2**) .
- ❑ Fit plugs into the openings.

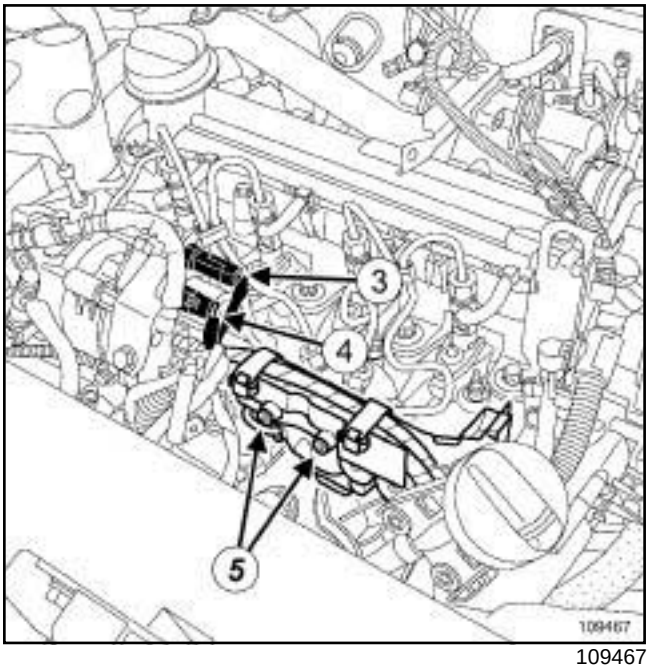

109467

- ❑ Disconnect:
  - the fuel temperature sensor connector (**3**) ,
  - the flow actuator connector (**4**) .
- ❑ Remove the mounting bolts from the neck (**5**) fixed to the spherical injector rail.
- ❑ Move the wiring with the neck to one side.
- ❑ Remove the high pressure pipes between the injector rail and the injectors (see **13B**, **Diesel injection**, **High-pressure pipe between the rail and injector: Removal - Refitting**, page **13B-181**) .

B84 or C84 or G84 or S84, and K9K, and 722 or 728 or 729

II - OPERATION FOR REMOVAL OF PART CONCERNED

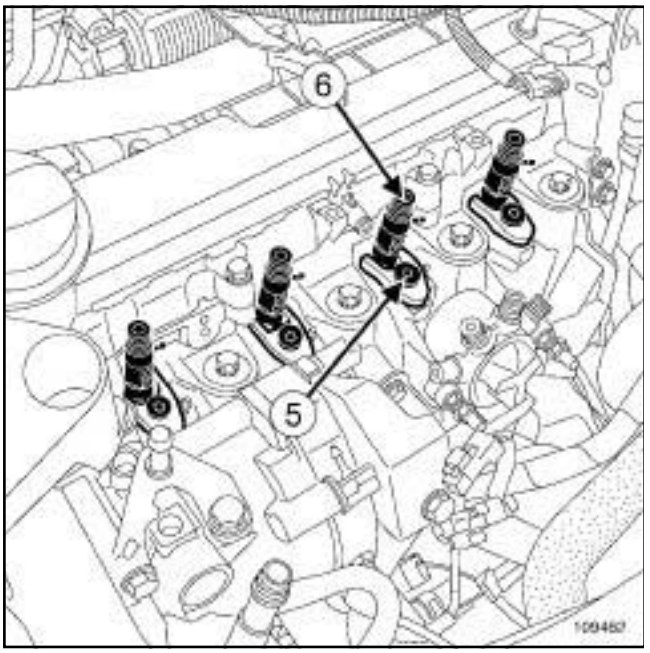

109462

- ❑ Loosen the injector bracket (**5**) .
- ❑ Remove the injector (**6**) .
- ❑ If reusing an injector, always mark a removed injector in relation to its cylinder.

> Note:
>
> an injector corresponds to a cylinder.

- ❑ Remove the heat protection washer.

> Note:
>
> If the compression washer is stuck at the bottom of the well, use the tool **(Mot. 1817)** (see **Injector well cleaning tool: Use**) (Technical Note 6040A, 13B, Diesel injection).

REFITTING

I - REFITTING PREPARATION OPERATION

Cleaning parts

- ❑

> **WARNING**
>
> It is strictly forbidden to clean the injectors with:
>
> - a wire brush,
> - an emery cloth,
> - an ultrasonic cleaner.

- ❑ Always clean the well of the removed injector (see **Injector well cleaning tool: Use**) (Technical Note 6040A, 13B, Diesel injection).
- ❑ If reusing the removed injector:
  - clean the injector using a cloth soaked in **INJECTOR CLEANER** (see **Vehicle: Parts and ingredients for the repairwork**) or **BRAKE CLEANER** (see **Vehicle: Parts and ingredients for the repairwork**) ,
  - if necessary, leave the injector nozzle to soak in **INJECTOR CLEANER** (see **Vehicle: Parts and ingredients for the repairwork**) ,
  - Wipe the injector with a new wipe.

> **IMPORTANT**
>
> To avoid any risk of damaging the systems, apply the safety and cleanliness instructions and operation recommendations before carrying out the repair (see **Vehicle: Parts and ingredients for the repairwork**) (04B, Consumables - Products) and (see **13B**, **Diesel injection**, **Diesel injection: Precautions for repair**, page **13B-12**) .

> **WARNING**
>
> Do not remove the blanking plugs from each component until the last moment.
>
> Also, do not remove the components from their packaging until they are to be fitted to the vehicle.

- ❑ Remove the injector from its plastic bag.
- ❑ Remove the blanking plugs on the nose of the injector.

B84 or C84 or G84 or S84, and K9K, and 722 or 728 or 729

II - REFITTING OPERATION FOR PART CONCERNED

❏

> **WARNING**
> Do not remove the caps from each component until the last moment.

❏ If removing the four injectors, loosen the mounting nuts of the injector rail by a few turns (the rail should be loose).

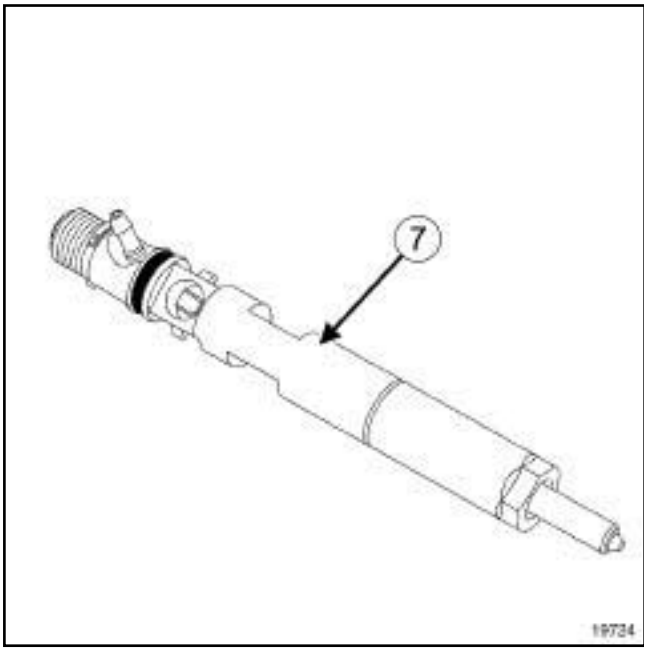

19724

❏ Replace the compression washer with a new one.

❏ Position the injector.

> Note:
> If one or more injectors are replaced, note the alphanumeric code (C2I) (**7**) and the cylinder on which it is fitted.

❏ Torque tighten the **injector clamp (28 N.m)**.

III - FINAL OPERATION

❏ Refit the high pressure pipes between the rail and the injector (see **13B**, **Diesel injection**, **High-pressure pipe between the rail and injector: Removal - Refitting**, page **13B-181**)

❏ Refit the neck on the injector rail.

❏ Torque tighten the **nuts on the neck on the rail (21 N.m)**.

❏ Connect:

- the injector diesel fuel return pipe,
- the injector connectors,
- the heater plugs.

❏ Connect the battery (see **Battery : Removal - Refitting**) (80A, Battery).

❏ Refit the engine undertray.

❏ Program the alphanumeric code (C2I) for the replaced injector(s) using the **diagnostic tool** (see **Fault finding - Replacement of components**) (13B, Diesel injection).

> **WARNING**
> Check that there are no diesel leaks:
> - Run the engine until the fan starts up.
> - Accelerate several times at no load.
> - Switch off the ignition.
> - Check that there is no diesel fuel escaping.

Diesel injector: Removal - Refitting

B84 or C84 or G84 or S84, and F9Q

Essential special tooling	
Mot. 1817	Injector well cleaning kit

Essential equipment
diagnostic tool

Tightening torques ▽	
diesel injector clamp bolts	**25 N.m**

IMPORTANT

Before carrying out any work on the injection system, check using the **diagnostic tool** :

- that the rail is not under pressure,
- that the fuel temperature is not too high.

Working on the circuit with the engine running is strictly forbidden.

IMPORTANT

Consult the safety and cleanliness advice and operation recommendations before carrying out any repair (see **13B**, **Diesel injection**, **Diesel injection: Precautions for repair**, page **13B-12**) .

WARNING

Dismantling the interior of the high pressure pump and the injectors is prohibited.

Note:

The diesel injectors can be replaced individually. Only remove the high pressure pipe concerned.

REMOVAL

I - REMOVAL PREPARATION OPERATION

❑ Remove the engine covers.

❑ Disconnect the battery (see **Battery: Removal - Refitting**) (80A, Battery).

❑ For versions with injector rail protectors, remove:

- the inlet duct (see **12A**, **Fuel mixture**, **Air inlet duct: Removal - Refitting**, page **12A-46**) , if necessary,
- the injector rail protector (see **13B**, **Diesel injection**, **Injector rail protector: Removal - Refitting**, page **13B-154**) .

❑ For versions without injector rail protectors:

- remove the air inlet duct (see **12A**, **Fuel mixture**, **Air inlet duct: Removal - Refitting**, page **12A-46**) , if necessary.

B84 or C84 or G84 or S84, and F9Q

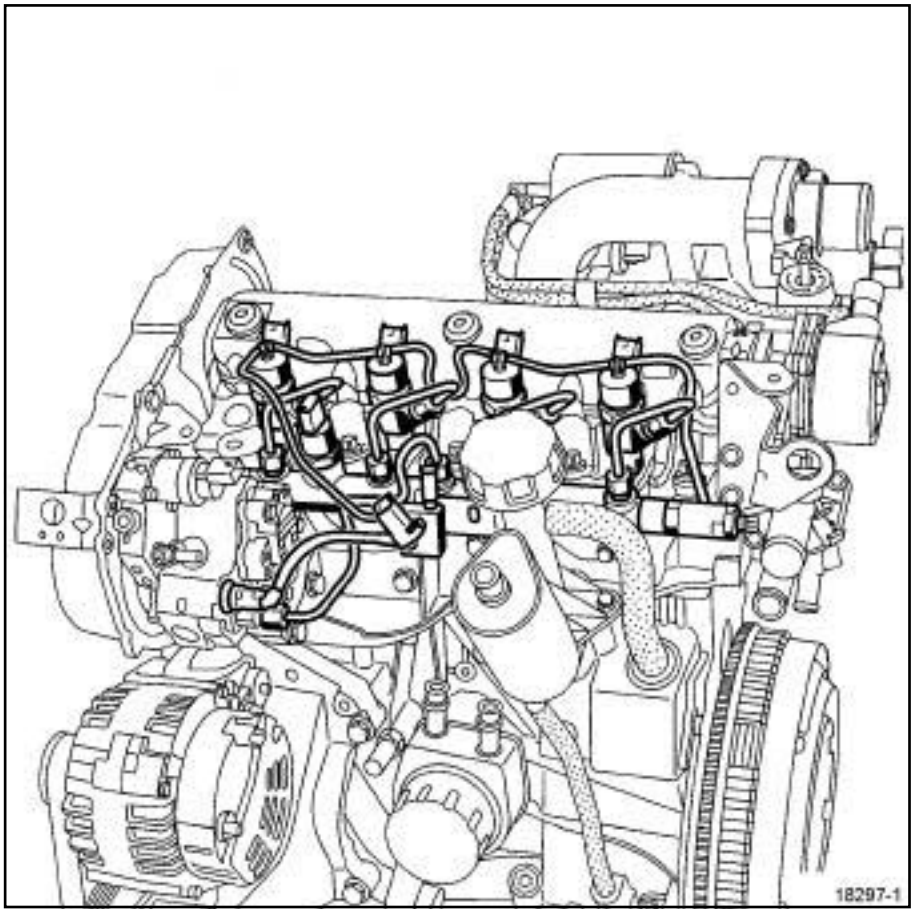

18297-1

❑ Remove:

- the diesel injector fuel return rail (see **13B**, **Diesel injection**, **Diesel injector fuel return rail: Removal - Refitting**, page **13B-148**) ,
- the high pressure pipe between the injector rail and the diesel injector (see **13B**, **Diesel injection**, **High-pressure pipe between the rail and injector: Removal - Refitting**, page **13B-181**) .

II - OPERATION FOR REMOVAL OF PART CONCERNED

❑ If reusing a diesel injector, always mark the removed injector in relation to its cylinder.

> Note:
>
> One diesel injector corresponds to one cylinder.

❑ Disconnect the connector from the diesel injector.

❑ Remove:

- the diesel injector clamp bolt,
- the diesel injector with its clamp.

❑ Remove the heat protection washer.

> Note:
>
> If the heat protection washer is stuck at the bottom of the well, use the **(Mot. 1817)** (see **Injector well cleaning tool: Use**) (Technical Note 6040A, 13B, Diesel injection).

REFITTING

I - REFITTING PREPARATION OPERATION

Cleaning parts

❑

> **IMPORTANT**
>
> Wear leaktight gloves (Nitrile type) for this operation.

❑ Always clean the well of the removed diesel injector (see **Injector well cleaning tool: Use**) (Technical Note 6040A, 13B, Diesel injection).

B84 or C84 or G84 or S84, and F9Q

❑ If reusing the removed diesel injector:

- clean the diesel injector using a cloth soaked in **INJECTOR CLEANER** or **BRAKE CLEANER**,
- if necessary, leave the diesel injector nozzle to soak in **INJECTOR CLEANER**,
- wipe the diesel injector with a new cloth,
- (see **Vehicle: Parts and consumables for repair**) (04B, Consumables - Products) and (see **13B**, **Diesel injection**, **Diesel injection: Precautions for repair**, page **13B-12**) .

Note:

It is strictly forbidden to clean the diesel injectors with:

- a wire brush,
- an emery cloth,
- an ultrasonic cleaner.

❑ Use a new cloth to dry components that have been cleaned.

II - REFITTING OPERATION FOR PART CONCERNED

❑

WARNING

Do not remove the blanking plugs from each component until the last moment.

Also, do not remove the components from their packaging until they are to be fitted to the vehicle.

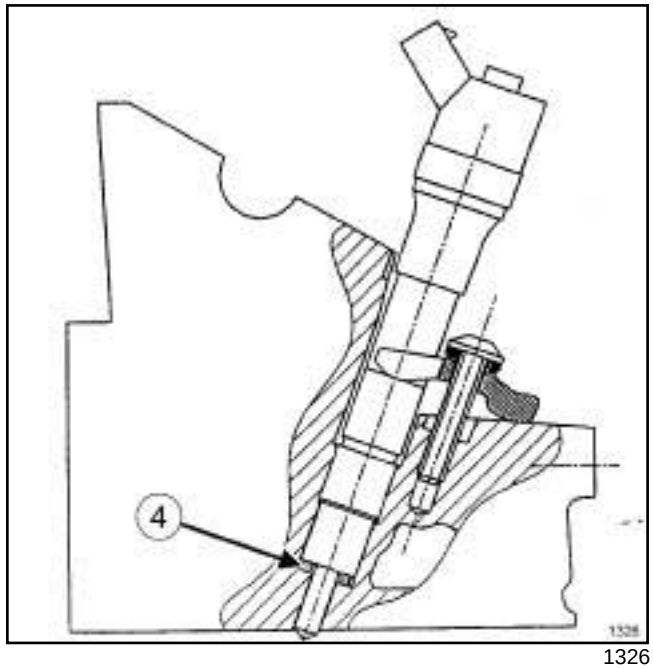

1326

❑ Replace the heat protection washer (**4**) with a new one.

Note:

If one or more diesel injectors have been replaced, note down the alphanumeric code (IMA) that is written on the new diesel injector and the cylinder on which it is fitted.

❑ Refit the diesel injector with its clamp.

❑ Torque tighten the **diesel injector clamp bolts (25 N.m)**.

❑ Connect the diesel injector connector.

III - FINAL OPERATION

❑ Refit:

- the high pressure pipe between the injector rail and the diesel injector (see **13B**, **Diesel injection**, **High-pressure pipe between the rail and injector: Removal - Refitting**, page **13B-181**) ,
- the diesel injector fuel return rail (see **13B**, **Diesel injection**, **Diesel injector fuel return rail: Removal - Refitting**, page **13B-148**) .

B84 or C84 or G84 or S84, and F9Q

- ❑ Refit the inlet duct (see **12A**, **Fuel mixture**, **Air inlet duct: Removal - Refitting**, page **12A-46**) , if removed.

> Note:
>
> For versions with injector rail protectors:
>
> - refit the inlet duct without refitting the injector rail protector or replacing the inlet duct seal.

- ❑ Connect the battery (see **Battery: Removal - Refitting**) (80A, Battery).
- ❑ Program the alphanumeric code (IMA) of the replaced diesel injector(s) using the **diagnostic tool** (see **Fault finding - Tests**) (13B, Diesel injection).

> Note:
>
> Check that there are no diesel leaks:
>
> - run the engine at idle speed.
> - accelerate several times under no load.
> - Switch off the ignition.
> - check that there is no diesel fuel escaping.

- ❑ For versions with injector rail protectors:
  - remove the air inlet duct, if refitted,
  - refit:
    - the injector rail protector (see **13B**, **Diesel injection**, **Injector rail protector: Removal - Refitting**, page **13B-154**) ,
    - the inlet duct (see **12A**, **Fuel mixture**, **Air inlet duct: Removal - Refitting**, page **12A-46**) .
- ❑ Refit the engine covers.

Diesel injector: Removal - Refitting

B84 or C84 or G84 or S84, and K9K, and 732 or 734

Essential special tooling	
Mot. 1817	Injector well cleaning kit
Mot. 1566	Spanner for removing high pressure pipes.
Mot. 1746	Offset spanner for tightening high pressure pump pipes.

Essential equipment
diagnostic tool

Tightening torques ▽	
injector bracket bolt	**30 N.m**
injector rail nuts	**28 Nm**
high pressure pipe nuts	**24 N.m**

IMPORTANT
To avoid all risk of damage to the systems, apply the safety and cleanliness instructions and operation recommendations before carrying out any repair (see **13B**, **Diesel injection**, **Diesel injection: Precautions for repair**, page **13B-12**) .

IMPORTANT
Wear leaktight gloves (Nitrile type) for this operation.

IMPORTANT
Before carrying out any work on the injection system, check using the **diagnostic tool** :

- that the injector rail is not under pressure,

- that the fuel temperature is not too high.

Every time work is carried out, it is essential to follow the safety and cleanliness instructions outlined in this document (see **13B**, **Diesel injection**, **Diesel injection: Precautions for repair**, page **13B-12**) .

REMOVAL

I - REMOVAL PREPARATION OPERATION

❑ Switch off the ignition and wait **30 seconds** before starting work on the injection system.

❑ Remove the engine covers.

❑ Disconnect the battery (see **Battery : Removal - Refitting**) (80A, Battery).

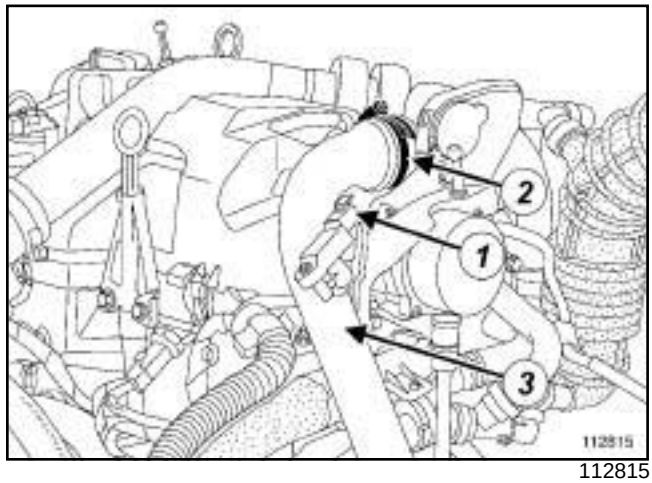

112815

❑ Disconnect the connector (**1**) from the inlet air pressure sensor.

❑ Loosen the clip (**2**) and move the intercooler air outlet pipe (**3**) to one side.

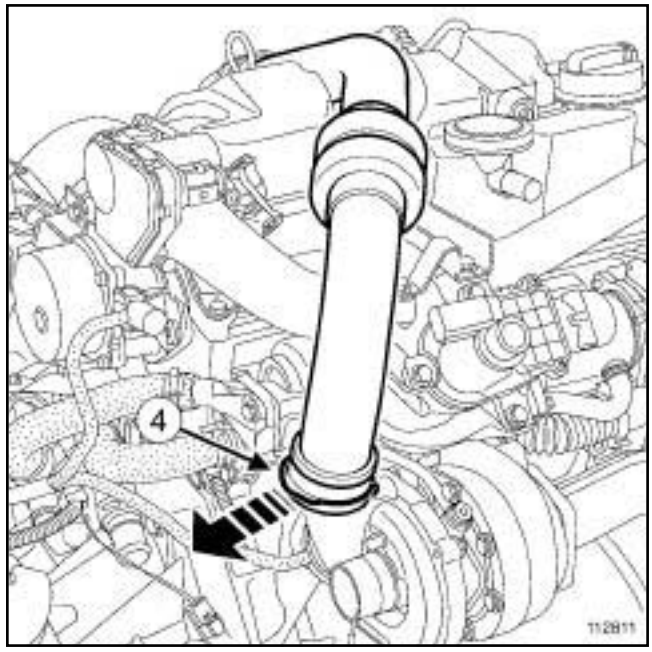

112811

❑ Pull out clip (**4**) .

B84 or C84 or G84 or S84, and K9K, and 732 or 734

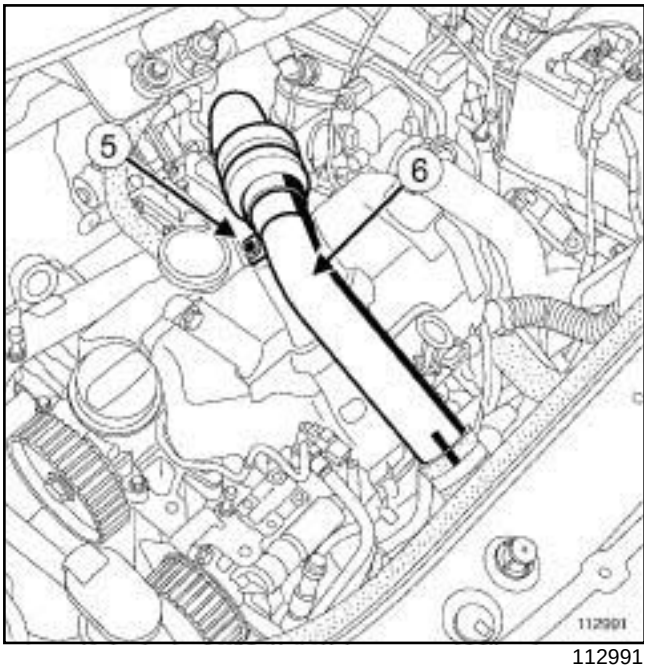

112991

❑ Remove the bolt (**5**) on the intercooler air inlet pipe.

❑ Move aside the intercooler air inlet pipe (**6**) .

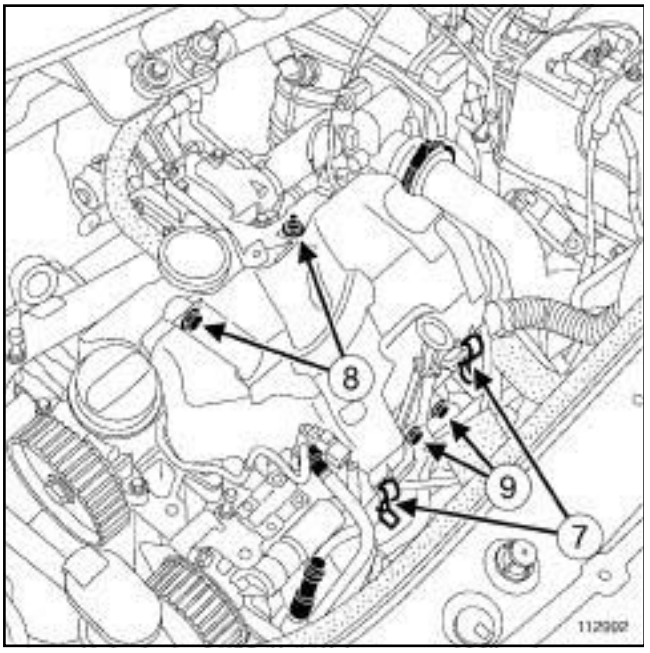

112992

❑ Unclip the injector rail protector cover (**7**) .

❑ Remove:

- the injector rail protector cover bolt and nut (**8**) ,
- the dipstick,
- the dipstick duct bolts (**9**) .

❑ Move the dipstick duct to one side.

❑ Protect the alternator from fuel outflow.

❑ Clean (see **13B**, **Diesel injection**, **Diesel injection: Precautions for repair**, page **13B-12**) :

- the high pressure pipes between the injector rail and the injectors,
- the fuel return connectors of the injectors.

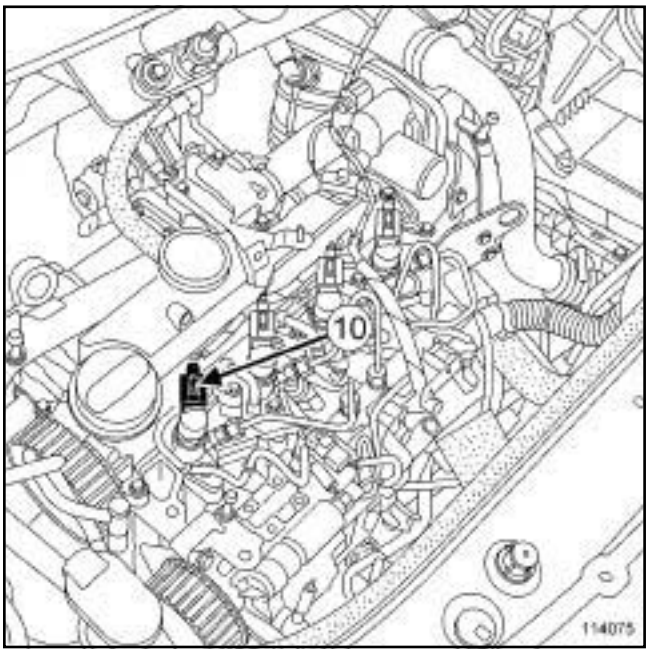

114075

❑ Disconnect the injector connector (**10**) .

B84 or C84 or G84 or S84, and K9K, and 732 or 734

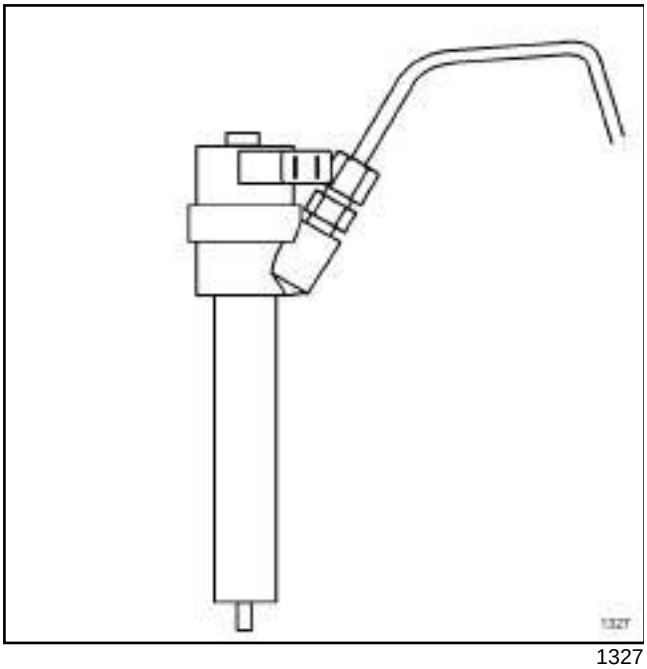

1327

❑

WARNING

Always hold the intermediate injector union in place with a wrench when loosening the high pressure pipes.

Do not damage the injector return nozzle.

❑ Remove:

- the nut of the high pressure pipe between the injector rail and the injector on the rail end,
- the nut of the high pressure pipe between the injector rail and the injector on the injector end,
- the high pressure pipe concerned and discard it.

Note:

Make preparations for fuel outflow. Clean with new cloths.

❑ Fit the correct blanking plugs.

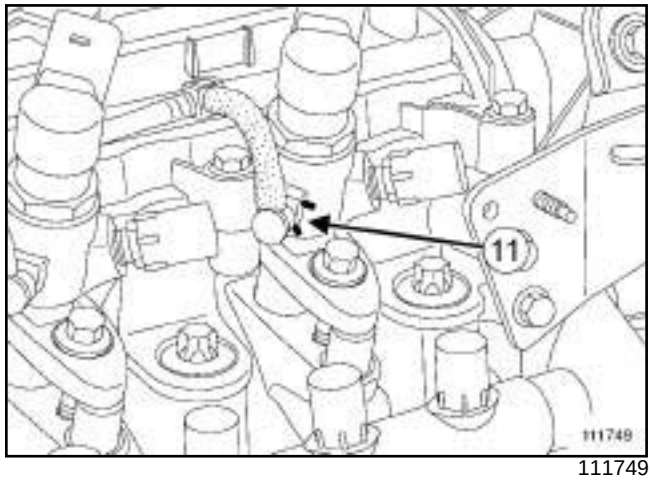

111749

❑ Using a thin, flat-blade screwdriver, push the lower bracket of the fuel return connector clip (**11**) on the injector towards the rocker cover.

WARNING

Ensure that the clip is not completely removed from its housing, otherwise it may be damaged when the diesel return union is removed.

In the case where a clip has been completely removed from its housing, remove the injector concerned and replace the clip with a new clip.

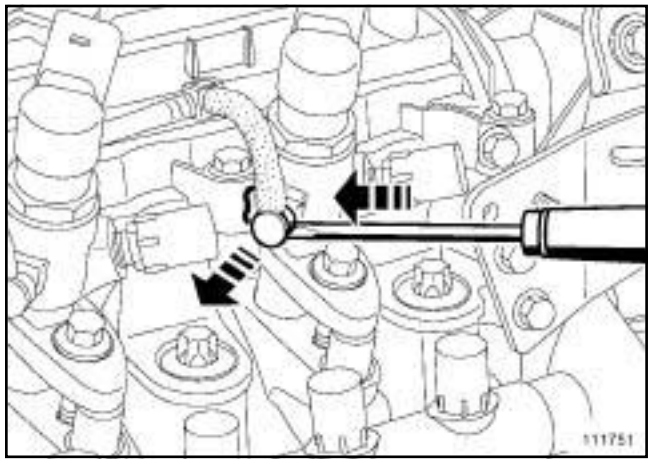

111751

❑ Extract the fuel return connector from the injector while pushing the lower section of the clip downwards.

❑ Fit the correct blanking plug.

❑ Remove the fuel return pipe from the injector.

B84 or C84 or G84 or S84, and K9K, and 732 or 734

II - OPERATION FOR REMOVAL OF PART CONCERNED

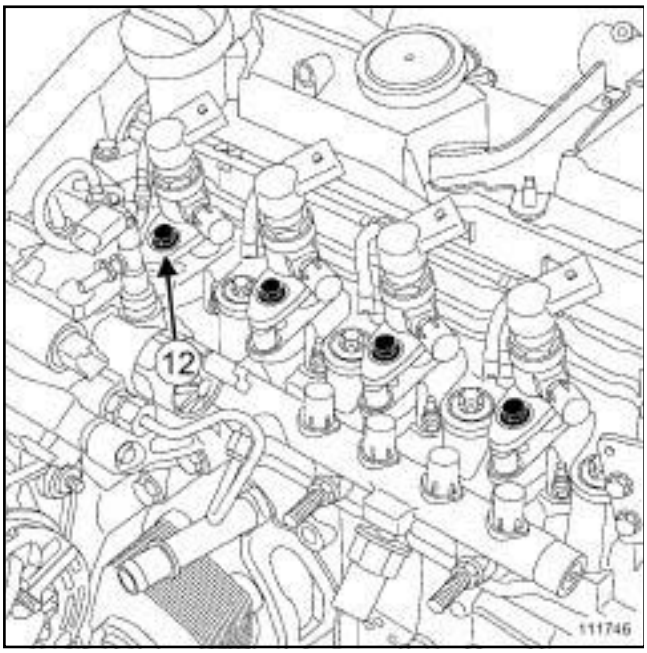

111746

❑ Remove:

- the injector clamp bolt (**12**) ,
- the injector clamp,
- the spacer between the cylinder head and the injector clamp,
- the injector,
- the heat protection washer.

> Note:
>
> If the compression washer is stuck at the bottom of the well, use the tool **(Mot. 1817)** (see **Injector well cleaning tool: Use**) (Technical Note 6040A, 13B, Diesel injection).

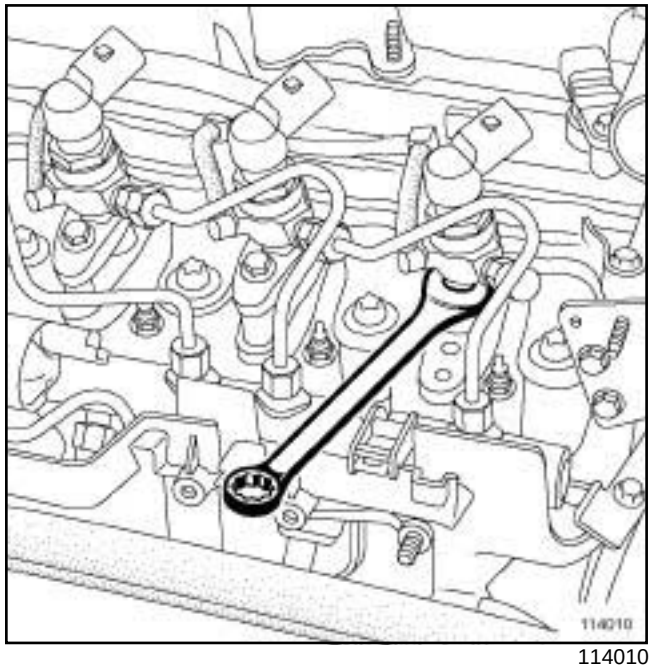

114010

❑

> Note:
>
> If the injector is jammed in its well and does not come out, turn the injector at the flat support surfaces of the injector clamp using a **13 mm** open-end wrench.

❑ Fit the appropriate blanking plug on the injector's nose.

> **WARNING**
>
> If it is to be reused, keep the injector(s) in a sealed plastic bag until required.

> **WARNING**
>
> Ensure that no impurities enter the cylinder via the injector head in the cylinder head: plug the orifice using a clean cloth.

Removal of four injectors

❑

> Note:
>
> This procedure only applies if removing all the injectors and, after having removed them all, in preparation for refitting them.

B84 or C84 or G84 or S84, and K9K, and 732 or 734

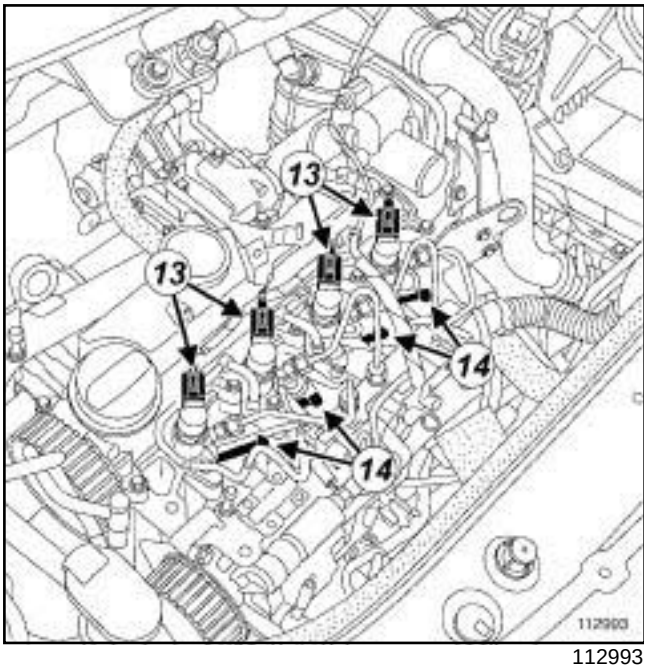

112993

❑ Disconnect:

- the connector (**13**) from the injectors,
- the connector (**14**) from the heater plugs.

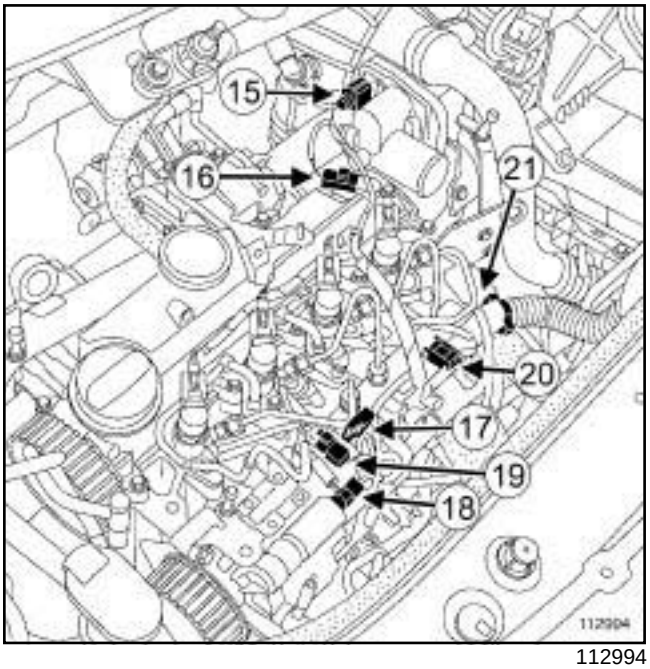

112994

❑ Disconnect:

- the damper valve connector (**15**) ,
- the connector (**16**) from the camshaft position sensor,
- the pressure regulation solenoid valve connector (**17**) ,
- the (**18**) flow regulation solenoid valve connector,
- the diesel temperature sensor connector (**19**) ,
- the rail pressure sensor connector.

❑ Unclip the wiring clip (**20**) .

❑ Remove the wiring clip nut (**21**) .

❑ Move aside the wiring.

B84 or C84 or G84 or S84, and K9K, and 732 or 734

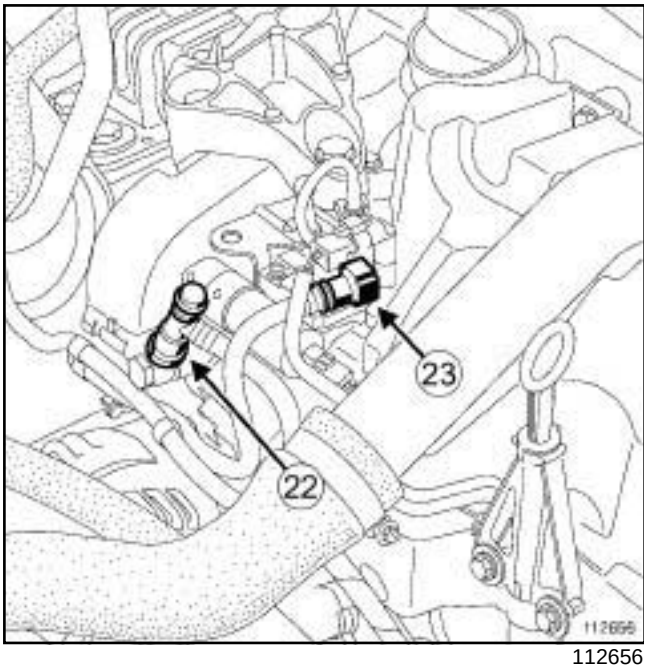

112656

❑ Clean the unions on the fuel supply and return pipes (see **13B**, **Diesel injection**, **Diesel injection: Precautions for repair**, page **13B-12**) .

❑ Disconnect:

- the fuel supply pipe (**22**) ,
- the fuel return pipe (**23**) .

> Note:
>
> Make preparations for fuel outflow. Clean with new cloths.

❑ Fit the correct blanking plugs.

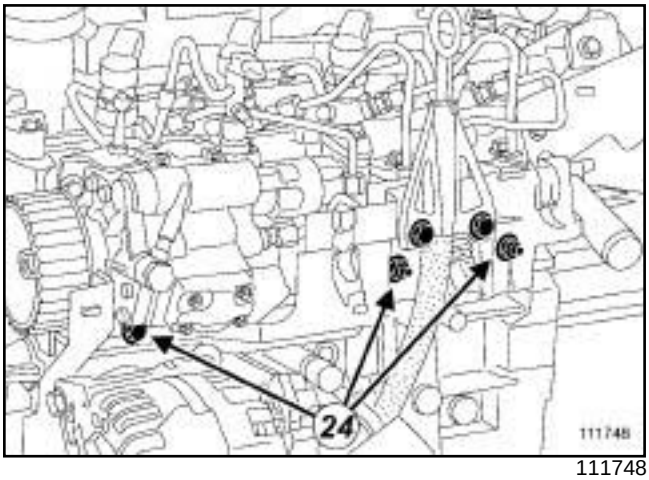

111748

❑ Unclip the diesel evacuation pipe.

❑ Remove:

- the injector rail protector mounting bolt and nuts (**24**) ,
- the injector rail protector mounting.

❑ Undo the injector rail nuts by a few turns (the injector rail should be loose).

REFITTING

I - REFITTING PREPARATION OPERATION

❑ **parts always to be replaced: injector seal (11,11, 02,02)**.

Cleaning parts

❑

> **WARNING**
>
> It is strictly forbidden to clean the injectors with:
>
> - a wire brush,
> - an emery cloth,
> - an ultrasonic cleaner.

❑ Always clean the well of the removed injector (see **Injector well cleaning tool: Use**) (Technical Note 6040A, 13B, Diesel injection).

B84 or C84 or G84 or S84, and K9K, and 732 or 734

❑ If reusing the removed injector:

- clean the injector using a cloth soaked in **INJECTOR CLEANER** or **BRAKE CLEANER** (see **Vehicle: Parts and ingredients for the repairwork**) (04B, Consumables - Products),
- if necessary, leave the injector nozzle to soak in **INJECTOR CLEANER** (see **Vehicle: Parts and ingredients for the repairwork**) (04B, Consumables - Products),
- wipe the injector with a new wipe,
- (see **13B**, **Diesel injection**, **Diesel injection: Precautions for repair**, page **13B-12**) .

WARNING

Only remove the blanking plugs immediately before connecting the fuel circuit pipes.

The plugs are single-use. Do not reuse them; dispose of the whole set after use.

❑ Remove the injector from its plastic bag.

WARNING

If replacing the injector, do not remove it (them) from its (their) packaging until just before you refit it (them).

❑ Remove the blanking plugs on the nose of the injector.

II - REFITTING OPERATION FOR PART CONCERNED

❑ Refit:

- a new fire-resistant washer at the bottom of the injector's well in the cylinder head,
- the injector,
- the spacer between the cylinder head and the injector clamp,
- the injector clamp,
- the injector clamp bolt.

❑ Torque tighten the **injector bracket bolt (30 N.m)**.

❑ Remove the blanking plugs.

❑ Fit the new high pressure pipe(s) between the injector rail and the injector.

Note:

If the new pipes kit does not contain an applicator, do not lubricate the pipe threads (as they are self-lubricating pipes).

❑ Finger tighten the high pressure pipe nuts, starting with the one at the injector rail end.

1 - Refitting the four high pressure pipes

❑ Torque tighten the **injector rail nuts (28 Nm)**.

❑ Refit:

- the injector rail protector mounting,
- the injector rail protector mounting bolt and nuts.

❑ Clip the diesel evacuation pipe into place.

❑ Remove the blanking plugs.

❑ Connect:

- the fuel supply pipe,
- the fuel return pipe.

❑ Fit the wiring.

❑ Refit the wiring clip nut.

❑ Clip on the wiring clip.

❑ Connect:

- the rail pressure sensor connector,
- the diesel temperature sensor connector ,
- the flow regulation solenoid valve connector,
- the pressure regulation solenoid valve connector,
- the camshaft position sensor connector,
- the damper valve connector,
- the heater plugs connector,
- the injectors' connector.

2 - All types

❑ Torque tighten the **high pressure pipe nuts (24 N.m)** using the **(Mot. 1566)** or **(Mot. 1746)** starting with the injector rail side.

❑ Remove the blanking plugs.

❑ Push the fuel return connector clip on the injector to the front of the vehicle in order to place it in its initial position.

B84 or C84 or G84 or S84, and K9K, and 732 or 734

❏ Clip on the fuel return connector of the injector.

WARNING

Check the condition of the seal on the fuel return connector of the injector.

Change the diesel return rail if one of its components is damaged.

III - FINAL OPERATION

❏ Refit:

- the dipstick duct bolts,
- the dipstick,
- the injector rail protector cover bolt and nut.

❏ Clip the injector rail protector cover into place.

❏ Refit:

- the clip on the intercooler air inlet pipe if necessary,
- the intercooler air inlet pipe.

❏ Clip the intercooler air inlet pipe on the turbocharger.

❏ Refit:

- the bolt on the intercooler air inlet pipe,
- the intercooler air outlet pipe on the damper valve.

❏ Tighten the clip.

❏ Connect:

- the air inlet pressure sensor connector,
- the battery (see **Battery: Removal - Refitting**) (80A, Battery).

❏ Reprime the fuel circuit with the manual priming pump.

❏ Refit the engine covers.

❏ Using the **diagnostic tool**, clear any faults stored by the injection computer, before restarting the engine.

WARNING

Check that there are no diesel leaks:

- check the sealing after repair (see **13B**, **Diesel injection**, **High pressure pipe: Checking**, page **13B-157**) ,
- run the engine at idle speed,
- accelerate several times at no load,
- switch off the ignition,
- check that there are no diesel leaks.

❏ Use the **diagnostic tool** to check that there are no stored faults; clear them if necessary.

Diesel injector: Removal - Refitting

B84 or C84 or E84 or K84 or L84, and M9R

Essential special tooling	
Mot. 1817	Injector well cleaning kit

Essential equipment
indelible pencil
diagnostic tool

Tightening torques ▽	
diesel injector clamp bolts	**35 N.m**

IMPORTANT

Use the diagnostic tool before any operation is carried out on the injection circuit to check:

- that the rail is not under pressure,
- that the fuel temperature is not too high.

Working on the circuit with the engine running is strictly forbidden.

IMPORTANT

To avoid all risk of damage to the systems, apply the safety and cleanliness instructions and operation recommendations before carrying out any repair (see **13B**, **Diesel injection**, **Diesel injection: Precautions for repair**, page **13B-12**) .

Note:

It is strictly forbidden to disconnect an injector connector with the engine running.

REMOVAL

I - REMOVAL PREPARATION OPERATION

❑ Disconnect the battery (see **Battery: Removal - Refitting**) (80A, Battery).

❑ Remove:

- the engine covers,
- the injector rail protector (see **13B**, **Diesel injection**, **Injector rail protector: Removal - Refitting**, page **13B-154**) ,

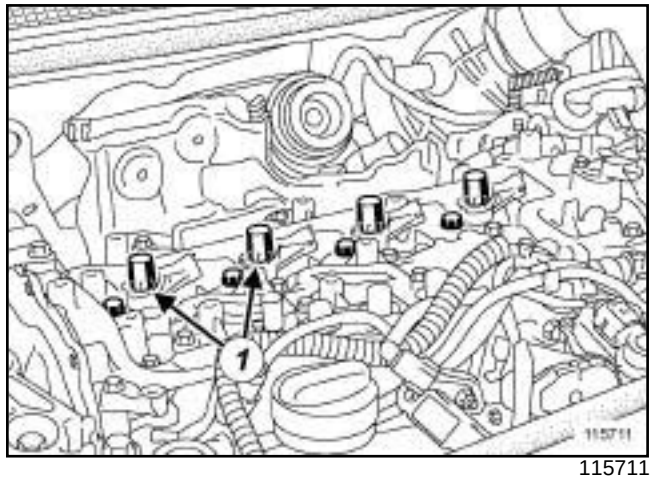

115711

❑ Remove:

- the oil separator (see **11A**, **Top and front of engine**, **Oil decanter: Removal - Refitting**, page **11A-301**) to remove the injectors (**1**) of cylinders 1 and 2,
- the diesel injector fuel return rail (see **13B**, **Diesel injection**, **Diesel injector fuel return rail: Removal - Refitting**, page **13B-148**) ,
- the high pressure pipes between the rail and the injector (see **13B**, **Diesel injection**, **High-pressure pipe between the rail and injector: Removal - Refitting**, page **13B-181**) .

B84 or C84 or E84 or K84 or L84, and M9R

II - OPERATION FOR REMOVAL OF PART CONCERNED

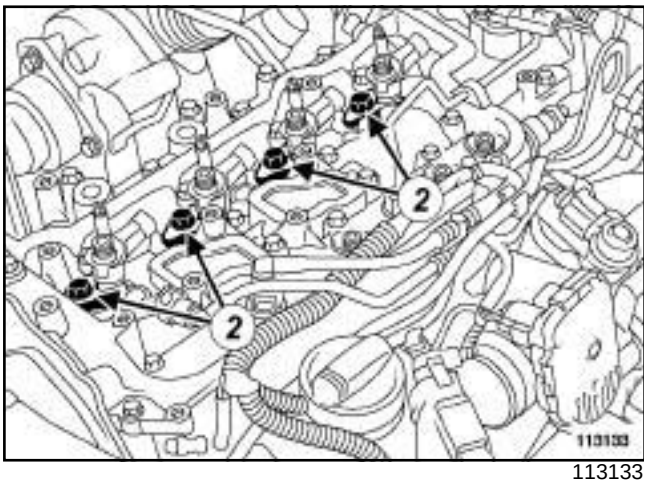

113133

- ❑ Clean around the injectors (see **13B**, **Diesel injection**, **Diesel injection: Precautions for repair**, page **13B-12**) .
- ❑ Mark the position of the injectors in relation to the cylinder using an **indelible pencil**.

> Note:
>
> Cylinder No. 1 is located on the timing end.

- ❑ Remove:
  - the diesel injector clamp bolts (**2**) ,
  - the diesel injector clamps,
  - the diesel injectors.
- ❑ Remove the heat protection washer.

> Note:
>
> If the compression washer is stuck at the bottom of the well, use the tool **(Mot. 1817)** (see **Injector well cleaning tool: Use**) (Technical Note 6040A, 13B, Diesel injection).

REFITTING

I - REFITTING PREPARATION OPERATION

❑

> **IMPORTANT**
>
> Wear leaktight gloves (Nitrile type) for this operation.

> **WARNING**
>
> It is strictly forbidden to clean the injectors with:
>
> - a wire brush,
> - an emery cloth,
> - an ultrasonic cleaner.

- ❑ **parts always to be replaced: injector seal (11,11, 02,02)**.

Cleaning parts

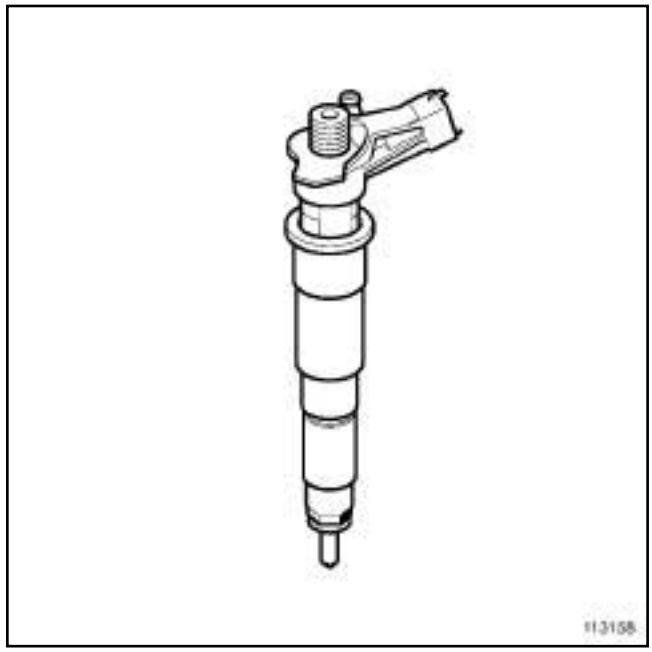

113158

- ❑ Always clean the well of the removed injector (see **Injector well cleaning tool: Use**) (Technical Note 6040A, 13B, Diesel injection).
- ❑ If reusing the removed injector:
  - clean the injector using a cloth soaked in **INJECTOR CLEANER** or **BRAKE CLEANER**,
  - if necessary, leave the injector nozzle to soak in **INJECTOR CLEANER**,
  - Wipe the injector with a new wipe.

B84 or C84 or E84 or K84 or L84, and M9R

- (see **Vehicle: Parts and ingredients for the repairwork**) (04B, Consumables - Products) and (see **13B**, **Diesel injection**, **Diesel injection: Precautions for repair**, page **13B-12**) .

II - REFITTING OPERATION FOR PART CONCERNED

❑

> **WARNING**
>
> Do not remove the blanking plugs from each component until the last moment.
>
> Also, do not remove the components from their packaging until they are to be fitted to the vehicle.

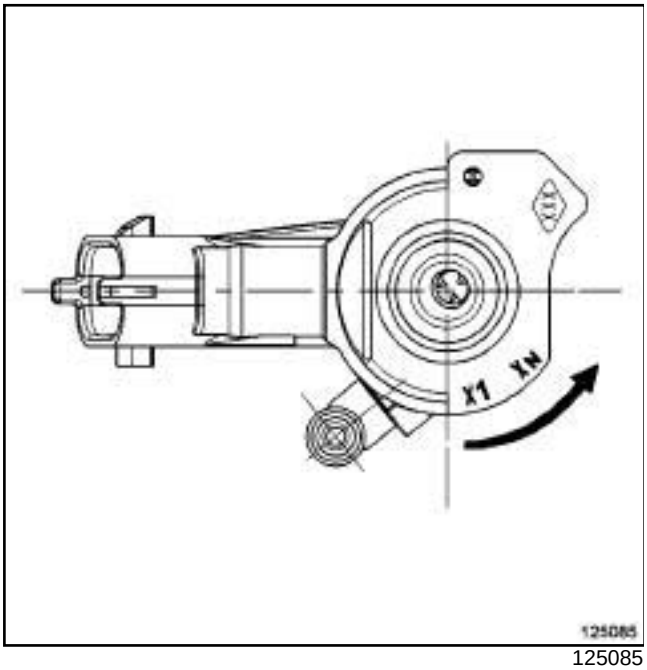

125085

❑ When replacing an injector, record the **IMA code** of the new injector and the number of the corresponding cylinder.

> Note:
>
> The **IMA code** reads from X1 to Xn.
>
> After connecting the battery, program the injectors using the **diagnostic tool**.

❑ Fit a new compression washer on every diesel injector.

❑ Refit:

- the « diesel injector - washer » assemblies in accordance with the marks made when they were removed,
- the diesel injector clamps,
- the diesel injector clamp bolts.

❑ Torque tighten the **diesel injector clamp bolts (35 N.m)**.

III - FINAL OPERATION

❑ Refit:

- the high pressure pipes between the rail and the injector (see **13B**, **Diesel injection**, **High-pressure pipe between the rail and injector: Removal - Refitting**, page **13B-181**) ,
- the diesel injector fuel return rail (see **13B**, **Diesel injection**, **Diesel injector fuel return rail: Removal - Refitting**, page **13B-148**) ,
- the oil separator (see **11A**, **Top and front of engine**, **Oil decanter: Removal - Refitting**, page **11A-301**) if removed,
- the injector rail protector (see **13B**, **Diesel injection**, **Injector rail protector: Removal - Refitting**, page **13B-154**) ,
- the engine covers.

❑ Prime the diesel circuit using the manual priming pump.

❑ Connect the battery (see **Battery : Removal - Refitting**) (80A, Battery).

❑ If replacing the diesel injectors, program the **IMA** codes for the injectors, according to scenario **SC036** (**Fault finding - Replacement of components**) (13B, Diesel Injection) and (**Fault finding - Interpretation of commands**) (13B, Diesel Injection).

B84 or C84 or G84 or S84, and K9K, and 724

Essential equipment
brush with non abrasive bristles
diagnostic tool

Tightening torques ▽	
diesel injector clamp bolts	**28 N.m**

IMPORTANT
To avoid all risk of damage to the systems, apply the safety and cleanliness instructions and operation recommendations before carrying out any repair (see **13B**, **Diesel injection**, **Diesel injection: Precautions for repair**, page **13B-12**) .

REMOVAL

I - REMOVAL PREPARATION OPERATION

❏ Remove the front engine cover.

❏ Disconnect the battery (see **Battery: Removal - Refitting**) (80A, Battery).

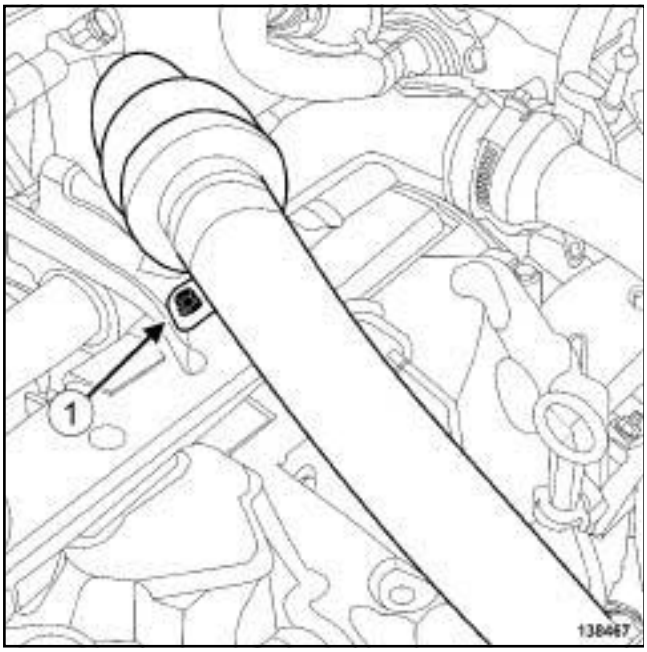

138467

❏ Remove the bolt (**1**) on the intercooler air inlet pipe.

123299

❏ Pull the clip (**2**) from the intercooler inlet air pipe.

❏ Disconnect the intercooler air inlet pipe.

❏ Move aside the intercooler air inlet pipe.

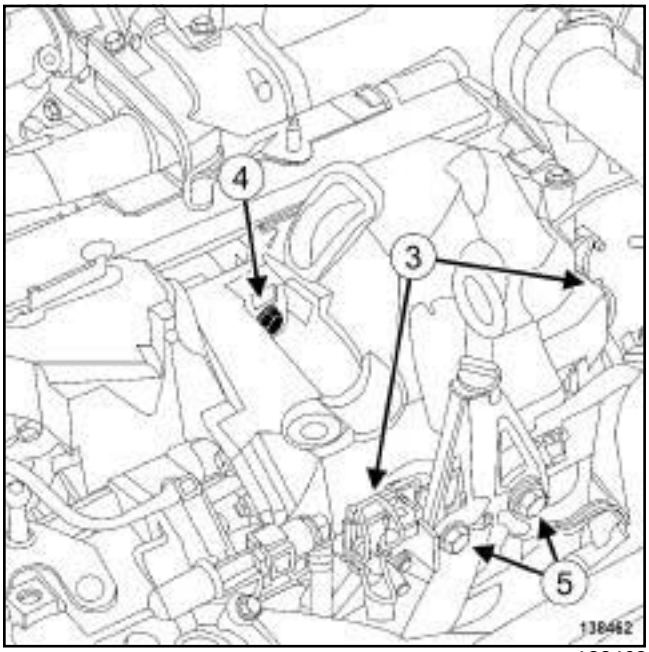

138462

❏ Unclip the injector rail protector cover at (**3**) .

❏ Remove:

- the injector rail protector cover bolt (**4**) ,
- the injector rail protector cover,
- the dipstick support bolts (**5**) .

❏ Move aside the dipstick support.

B84 or C84 or G84 or S84, and K9K, and 724

II - OPERATION FOR REMOVAL OF PART CONCERNED

❑ Remove:

- the diesel injector fuel return rail (see **13B**, **Diesel injection**, **Diesel injector fuel return rail: Removal - Refitting**, page **13B-148**) ,
- the high pressure pipe between the rail and injector of the injector concerned (see **13B**, **Diesel injection**, **High-pressure pipe between the rail and injector: Removal - Refitting**, page **13B-181**) .

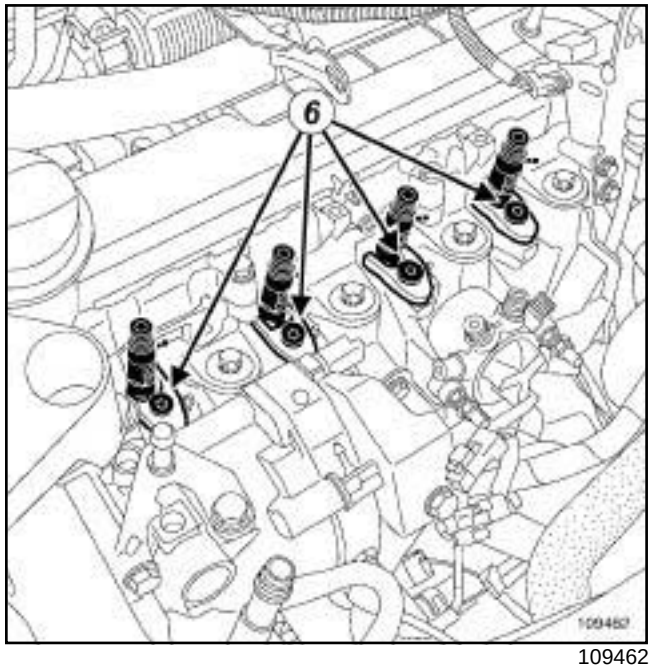

109462

❑

> Note:
>
> If reusing one or more diesel injectors, it is essential to mark the injector in relation to its cylinder before removing it.
>
> If reusing the diesel injector(s) keep them in a hermetically sealed bag throughout the removal operation.

❑ Remove:

- the bolt (**6**) from the diesel injector clamp concerned,
- the diesel injector clamp concerned,
- the spacer from the diesel injector clamp concerned,
- the diesel injector concerned,
- the compression washer located at the bottom of the diesel injector well concerned.

> Note:
>
> If a diesel injector is stuck in its well and does not come out, turn the diesel injector at the flat surface of the diesel injector clamp using a **13 mm** open-ended spanner.

❑ Fit the appropriate blanking plug on the diesel injector nose.

B84 or C84 or G84 or S84, and K9K, and 724

REFITTING

I - REFITTING PREPARATION OPERATION

❑ Always replace the heat protection washer of the diesel injector concerned.

> **WARNING**
> Only use brushes with plastic or non-corrosive metal (brass) bristles.

❑ Clean the injectors using a **brush with non abrasive bristles** or using a **LINT-FREE CLOTH** soaked in **INJECTOR CLEANER** (see **Vehicle: Parts and ingredients for the repairwork**) (04B, Consumables - Products).

❑ Clean the injector wells using the tool (see **Injector well cleaning tool: Use**) (Technical Note 6040A, 13B, Diesel injection).

II - REFITTING OPERATION FOR PART CONCERNED

❑

> **WARNING**
> Do not remove the blanking plugs from each component until the last moment.
>
> Also, do not remove the components from their packaging until they are to be fitted to the vehicle.

❑ Remove the new diesel injector from its packaging.

❑ Remove the blanking plug from the diesel injector nose and discard it.

❑ Refit:

- a new heat protection washer,
- the diesel injector,
- the diesel injector clamp spacer,
- the diesel injector clamp,
- the diesel injector clamp bolt.

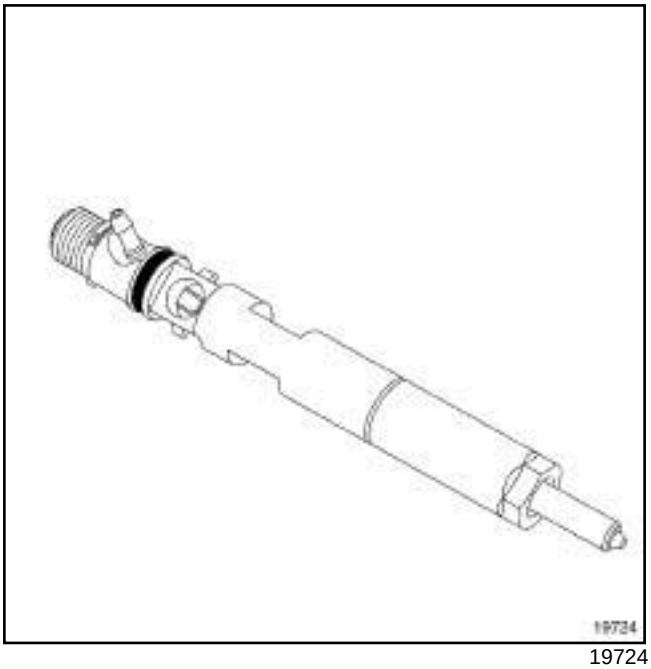

19724

❑

> Note:
>
> If reusing one or more diesel fuel injectors, refit the injector in the cylinder marked beforehand.
>
> If reusing one or more diesel fuel injectors, note the alphanumeric code of the injector and the cylinder on which it is fitted.

❑ Torque tighten the **diesel injector clamp bolts (28 N.m)**.

III - FINAL OPERATION

❑ Refit:

- a high pressure pipe between the rail and the new injector of the injector concerned (see **13B**, **Diesel injection**, **High-pressure pipe between the rail and injector: Removal - Refitting**, page **13B-181**) ,
- the diesel injector fuel return rail (see **13B**, **Diesel injection**, **Diesel injector fuel return rail: Removal - Refitting**, page **13B-148**) .
- the dipstick support,
- the injector rail protector cover,
- the intercooler air inlet pipe.

❑ Fit the clip of the intercooler air inlet pipe.

❑ Refit the bolt on the intercooler air inlet pipe.

❑ Check that there are no fuel leaks.

B84 or C84 or G84 or S84, and K9K, and 724

- Connect the battery (see **Battery : Removal - Refitting**) (80A, Battery).

> Note:
>
> If replacing one or more diesel injectors, use the **diagnostic tool** to program the alphanumeric code noted earlier **(see Technical Note 3845A or Technical Note 6500A (depending on the engine suffix), 13B, Diesel injection, Fault finding - Replacement of components)**.

- Check the high pressure circuit (see **13B**, **Diesel injection**, **High pressure pipe: Checking**, page **13B-157**) .
- Refit the engine cover.
- Use the **diagnostic tool** to check for an absence of stored faults; deal with these and clear them as necessary.

B84 or C84 or G84 or S84, and K9K, and 722 or 728 or 729

- Command **AC029** «High-pressure circuit sealing ring test » on the « Fuel/LPG » tab also enables the leakage rate of each injector to be checked in order to determine an internal leak in one, or several injectors. This test only works when the engine temperature is above **60°C**.
- Switch off the ignition.
- Disconnect the return pipes of the four injectors.
- Connect the four transparent hoses with an internal diameter of **4 mm** and a length of **50 cm** in the place of the return pipes.
- Immerse these hoses into four graduated measuring cylinders (or use the measuring tool found in the « capped rail » kit).
- Start the engine.
- Allow the engine to run for **2 minutes** at idle speed.
- Run command **AC029** « High-pressure circuit sealing test» on the « Fuel/LPG » tab. The engine will automatically carry out a cycle of four accelerations and decelerations to increase the pressure in the rail and check whether there are internal leaks on the injectors' return circuit.

  When the cycle is complete, the test must be run again, to obtain a correct reading of the flow of each injector.

  After two cycles the flow of each injector should be **35 ml**.
- Replace the faulty injector.

IMPORTANT

Never leave a tool or other object on the side of the engine housing during the four cycles (significant vibration).

B84 or C84 or G84 or S84, and K9K, and 722 or 728 or 729

REPLACING THE INJECTORS

Note:

The C2I (individual injector correction) parameters are a factory calibration carried out on each injector to adjust the flow of each injector precisely, taking into account their manufacturing variations.

The correction values are written on a label affixed to each injector then entered in the computer which can then control each injector by taking account of their manufacturing variations.

The system can be configured at the diagnostic socket using the RENAULT CLIP diagnostic tools.

The C2I parameters must be renewed after an injector is replaced. To do this, the C2I parameters must be re-entered into the computer using the following commands:

- To enter all four C2I, when replacing the computer, perform command **SC002 « Saisie des codes injecteurs »** .
- To enter an individual C2I parameter, when replacing one or more injectors, enter the following commands:
  - injector cylinder 1: command **VP001** (cylinder on the flywheel end),
  - injector cylinder 2: command **VP002**,
  - injector cylinder 3: command **VP003**,
  - injector cylinder 4: command **VP004**.

By using the relevant command, the technician can re-enter the new C2I parameters for the injector replaced and delete the old C2I parameters.

Note:

Only following simultaneous replacement of all four injectors, reset the injector parameters using command **RZ004 « Adaptatifs régulation de pression »** .

Accelerometer: Removal - Refitting

B84 or C84 or G84 or S84, and K9K, and 722 or 728 or 729

Essential special tooling	
Emb. 1596	24 mm socket for removing/ refitting clutch master cylinder.

Essential equipment
diagnostic tool

Tightening torques ▽	
accelerometer	**20 N.m**

REMOVAL

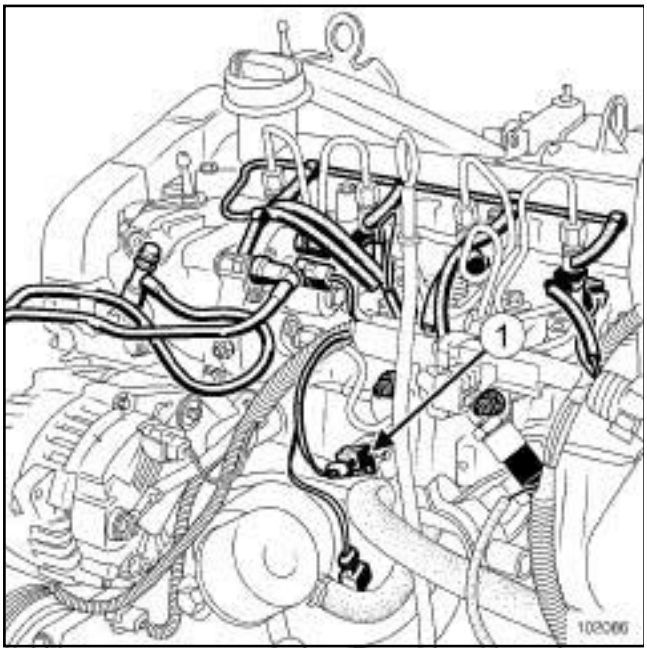

102086

- ❑ Disconnect the accelerometer connector (**1**) .
- ❑ Remove the accelerometer using **(Emb. 1596)**.

REFITTING

- ❑ Refit the accelerometer using the tool **(Emb. 1596)**.
- ❑ Connect the accelerometer connector
- ❑ Tighten to torque the **accelerometer (20 N.m)**.
- ❑ Connect the **diagnostic tool** to the vehicle.
- ❑ Clear the engine adaptives using command **RZ004 Pressure regulation adaptives**.
- ❑ Start the engine and leave it running for a few minutes whilst depressing the accelerator slightly a few times.
- ❑ Switch off the engine.
- ❑ Use the **diagnostic tool** to check for the absence of stored faults, deal with them and clear them, as necessary.

Note:

When replacing the accelerometer, run command **RZ004** using the **diagnostic tool** in order to carry out the necessary programming.

B84 or C84 or G84 or S84, and K9K, and 724

Essential special tooling	
Emb. 1596	24 mm socket for removing/ refitting clutch master cylinder.

Essential equipment
diagnostic tool

Tightening torques ▽	
accelerometer mountings	**21 N.m**

REMOVAL

I - REMOVAL PREPARATION OPERATION

❑ Remove the front engine cover.

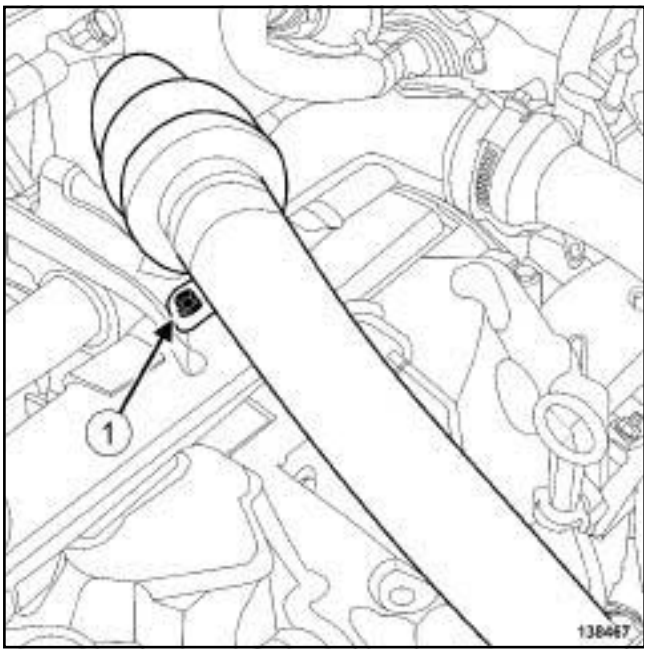

138467

❑ Remove the bolt (**1**) on the intercooler air inlet pipe.

123299

❑ Pull the clip (**2**) from the intercooler inlet air pipe.

❑ Disconnect the intercooler air inlet pipe.

❑ Move aside the intercooler air inlet pipe.

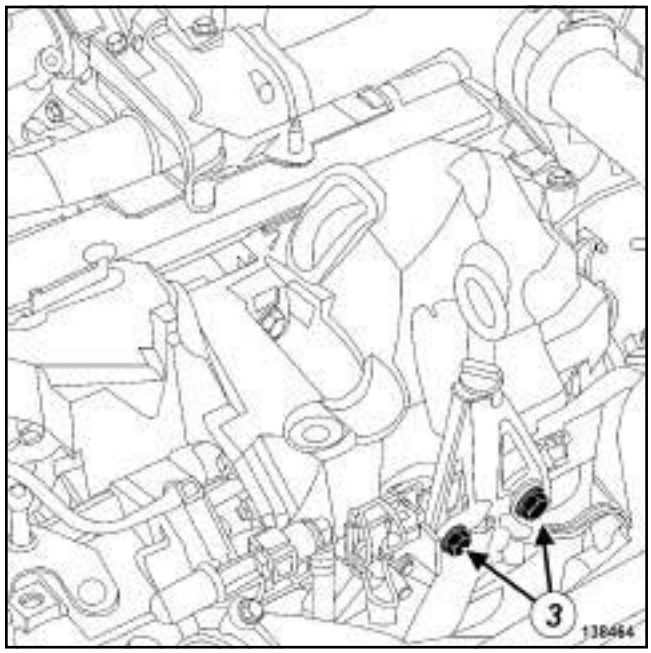

138464

❑ Remove the dipstick bolts (**3**) .

❑ Move aside the dipstick support.

❑ Remove the high pressure pipe between the pump and the rail (see **13B**, **Diesel injection**, **High-pressure pipe between the pump and rail: Removal - Refitting**, page **13B-160**) .

B84 or C84 or G84 or S84, and K9K, and 724

II - OPERATION FOR REMOVAL OF PART CONCERNED

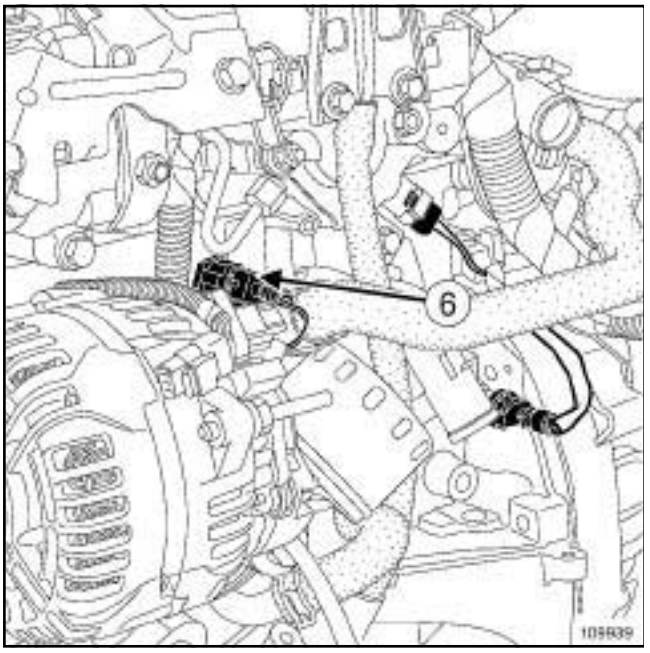

109939

❑ Remove the accelerometer (**6**) using the **(Emb. 1596)**.

REFITTING

❑ Refit the accelerometer.

❑ Torque tighten the **accelerometer mountings (21 N.m)**.

❑ Refit:

- the high pressure pipe between the rail and the pump (see **13B**, **Diesel injection**, **High-pressure pipe between the pump and rail: Removal - Refitting**, page **13B-160**) ,
- the dipstick support,
- the intercooler air inlet pipe.

❑ Fit the clip of the intercooler air inlet pipe.

❑ Refit the bolt on the intercooler air inlet pipe.

❑ Refit the engine cover.

❑ Connect the **diagnostic tool** to the vehicle.

❑ Clear the engine adaptives using command **RZ004 Pressure regulation adaptives**.

❑ Start the engine and leave it running for a few minutes whilst depressing the accelerator slightly a few times.

❑ Switch off the engine.

❑ Use the **diagnostic tool** to check for the absence of stored faults, deal with them and clear them, as necessary.

F9Q or K9K or M9R

Note:

It is located behind the front left-hand wheel arch liner.

REMOVAL

❑ Disconnect the battery (see **Battery: Removal - Refitting**) (MR 364, 80A, Battery).

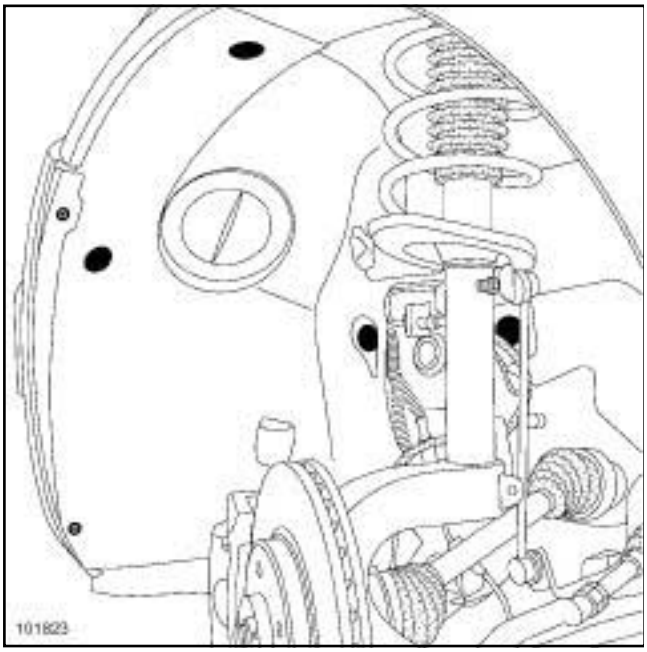

101823

❑ Remove:

- the front left-hand wheel (see **Wheel: Removal - Refitting**) (MR 364, 35A, Wheels and tyres),
- the front section of the front left-hand wheel arch liner (see **Front wheel arch liner: Removal - Refitting**) (MR 365, 55A, Exterior protection).

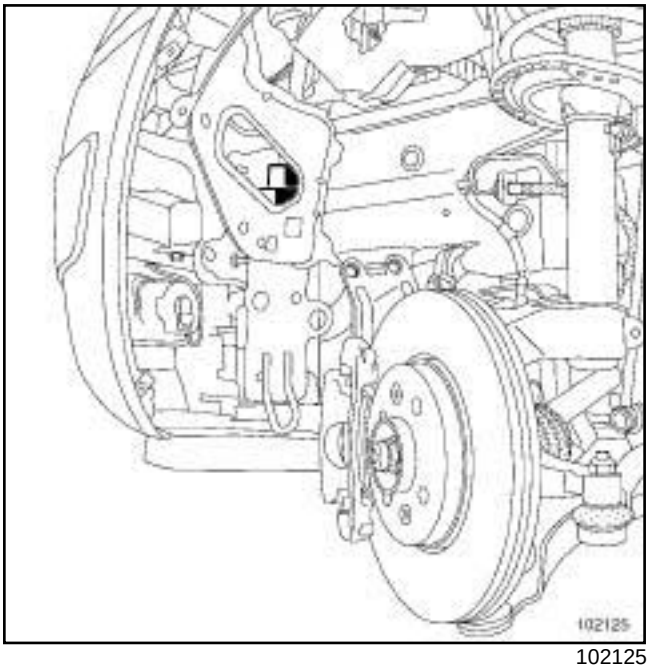

102125

❑ Disconnect the pre/postheating unit connector.

❑ Remove:

- the pre-postheating unit mounting bolt,
- the pre-postheating unit.

REFITTING

❑ Proceed in the reverse order to removal.

❑ Connect the battery (see **Battery : Removal - Refitting**) (MR 364, 80A, Battery).

B84 or C84 or G84 or S84, and K9K, and 722

Tightening torques ▽	
heater plugs	**15 Nm**
battery cover mounting bolts	**4 Nm**

The resistance of a heater plug is **0.6 Ω** (connector disconnected).

The preheating plugs are removed without opening the high pressure diesel circuit.

REMOVAL

❑ Remove the engine covers.

❑ Disconnect the battery (see **Battery: Removal - Refitting**) (MR 364, 80A, Battery).

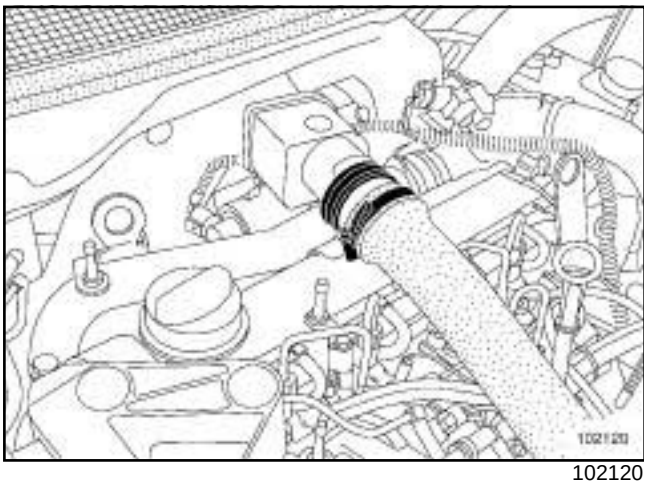

102120

❑ Disconnect the air duct.

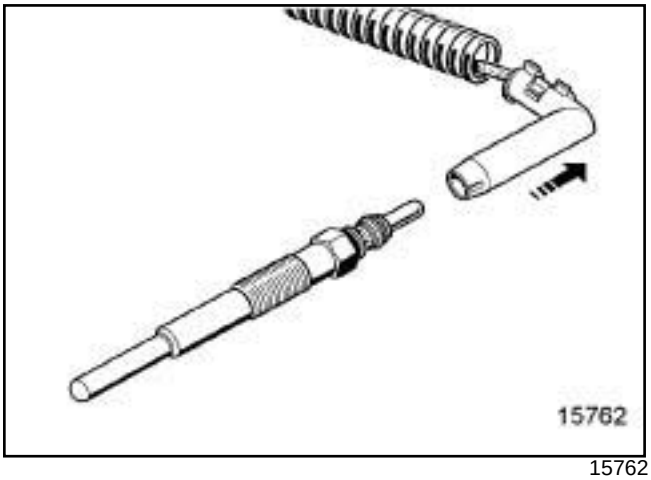

15762

❑ Disconnect the electrical connector from the heater plugs.

❑ Clean around the outside of the heater plugs with a compressed air gun to prevent contamination of the cylinders.

❑ Loosen then remove the plugs using a **10 mm** diameter long radio socket connected to a universal joint.

❑ Use a hose to unscrew the plugs completely.

> **WARNING**
> Ensure that no foreign bodies enter the cylinder during this operation.

REFITTING

❑ Proceed in the reverse order to removal.

❑ Torque tighten the **heater plugs (15 Nm)**.

❑ Connect the battery (see **Battery : Removal - Refitting**) (MR 364, 80A, Battery).

❑ Torque tighten the **battery cover mounting bolts (4 Nm)**.

B84 or C84 or G84 or S84, and K9K, and 728 or 729

Tightening torques ▽	
heater plugs	**15 Nm**
battery cover mounting bolts	**4 Nm**

REMOVAL

❏ Remove the engine covers.

❏ Disconnect the battery (see **Battery: Removal - Refitting**) (MR 364, 80A, Battery).

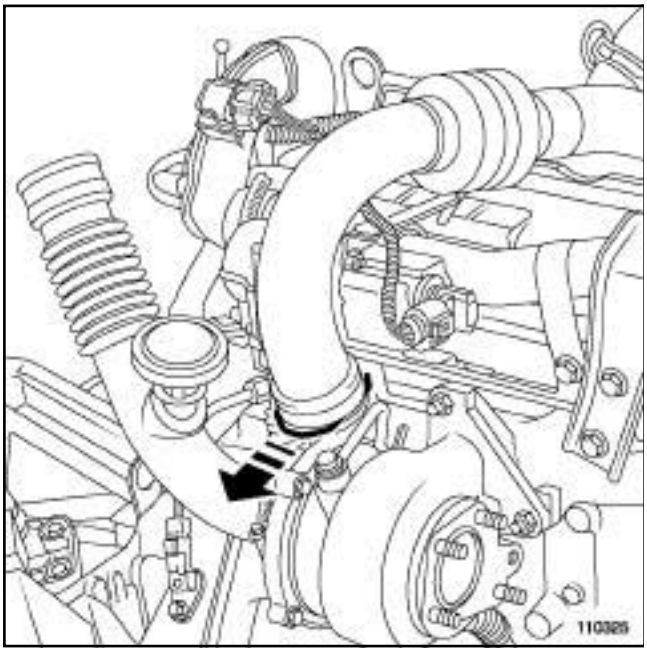

110325

❏ Pull the clip.

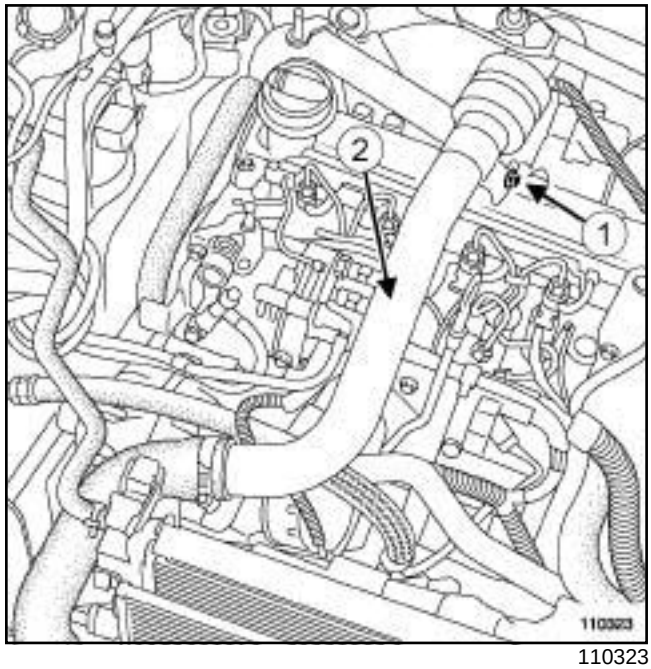

110323

❏ Undo the bolt (**1**) .

❏ Move aside the air duct (**2**) .

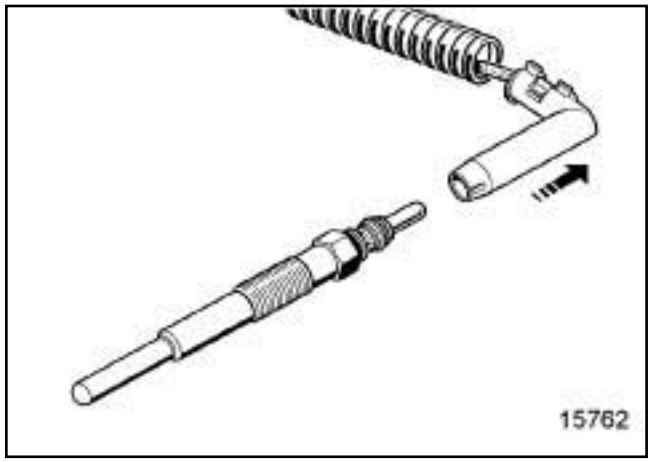

15762

❏ Disconnect the electrical connector from the heater plugs.

❏ Clean around the outside of the heater plugs with a compressed air gun to prevent contamination of the cylinders.

❏ Loosen then remove the plugs using a **10 mm** diameter long radio socket connected to a universal joint.

❏ Use a hose to unscrew the plugs completely.

WARNING

Ensure that no foreign bodies enter the cylinder during this operation.

B84 or C84 or G84 or S84, and K9K, and 728 or 729

REFITTING

- ❑ Proceed in the reverse order to removal.
- ❑ Torque tighten the **heater plugs (15 Nm)**.
- ❑ Connect the battery (see **Battery : Removal - Refitting**) (MR 364, 80A, Battery).
- ❑ Torque tighten the **battery cover mounting bolts (4 Nm)**.

B84 or C84 or G84 or S84, and F9Q, and 800 or 803 or 804 or 808 or 816 or 818

Tightening torques ▽	
heater plugs	**15 Nm**

The resistance of a heater plug is **0.6 Ω** (connector disconnected).

The preheating plugs are removed without opening the high pressure diesel circuit.

REMOVAL

❑ Remove the engine covers.

❑ Disconnect the battery (see **Battery: Removal - Refitting**) (MR 364, 80A, Battery).

F9Q, and 803 or 804 or 816 or 818

❑ Remove the inlet duct (see **12A**, **Fuel mixture**, **Air inlet duct: Removal - Refitting**, page **12A-46**) .

❑ Remove the injector rail protector (see **13B**, **Diesel injection**, **Injector rail protector: Removal - Refitting**, page **13B-154**) .

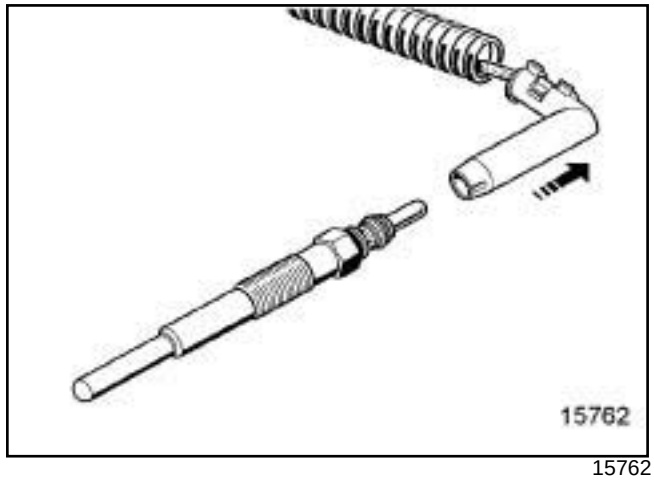

15762

❑ Disconnect the connector from the heater plug.

❑ Clean around the outside of the heater plugs with a compressed air gun to prevent contamination of the cylinders.

❑ Loosen then remove the plugs using a **10 mm** diameter long radio socket connected to a universal joint.

❑ Use a hose to unscrew the heater plugs completely.

> Note:
>
> Ensure that no foreign bodies enter the cylinder during this operation.

REFITTING

❑ Proceed in the reverse order to removal.

❑ Torque tighten the **heater plugs (15 Nm)**.

❑ Connect the battery (see **Battery: Removal - Refitting**) (MR 364, 80A, Battery).

B84 or C84 or G84 or S84, and K9K, and 732 or 734

Essential special tooling	
Car. 1363	Set of trim removal levers.

Tightening torques ▽	
heater plugs	**15 Nm**

WARNING

Procedure for removing the air inlet duct (risk of leaking and slipping if this procedure is not observed):

- detach the hose using the **(Car. 1363)**,
- do not use degreasing agent, brake cleaning product or any other product,
- clean the bearing face on the intercooler and on the hose with a dry, lint-free cloth,
- Always replace the clip with a new one,
- place the clip in the same position if the hose is not replaced,
- it is essential to replace the hose and/or the intercooler if they are damaged,

REMOVAL

I - REMOVAL PREPARATION OPERATION

❑ Remove the engine covers.

❑ Disconnect the battery (see **Battery: Removal - Refitting**) (MR 364, 80A, Battery).

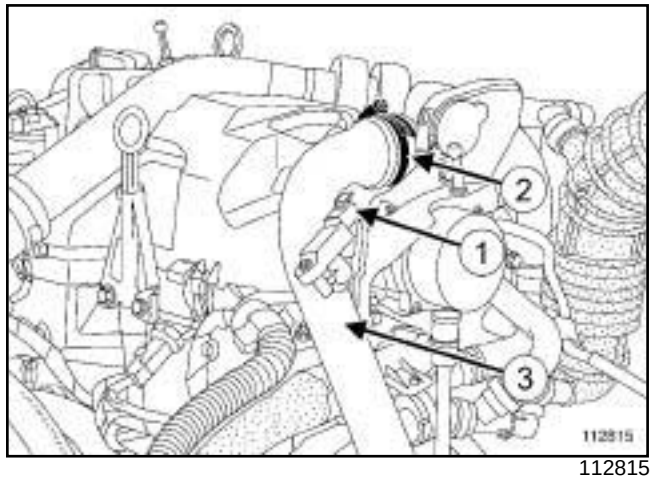

112815

❑ Disconnect the connector (**1**) from the inlet air pressure sensor.

❑ Loosen the clip (**2**) and move the air inlet manifold to one side (**3**) .

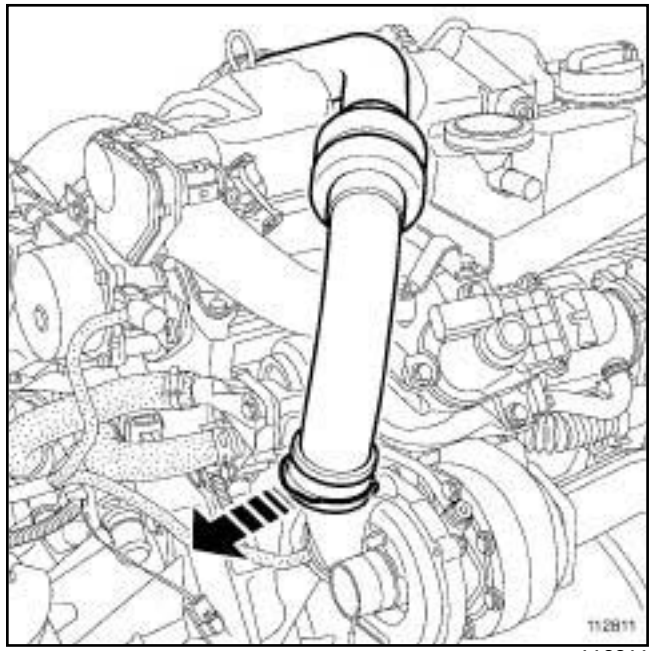

112811

❑ Pull the clip.

B84 or C84 or G84 or S84, and K9K, and 732 or 734

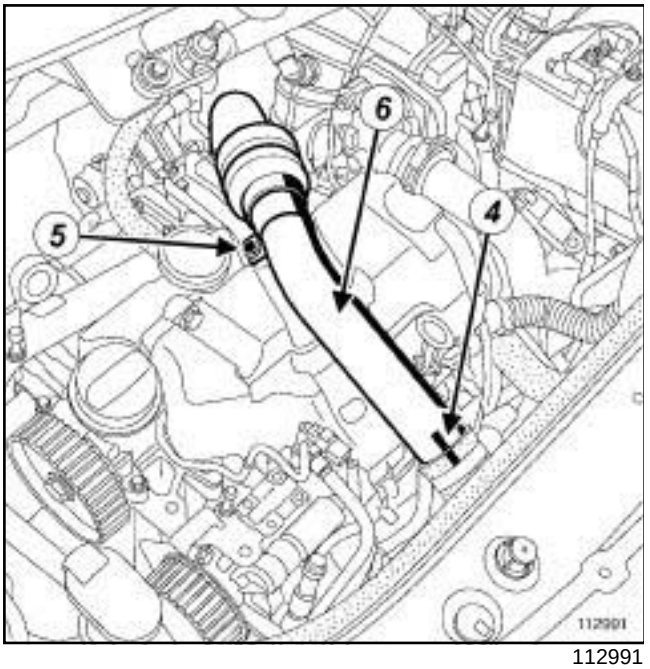

112991

❏ Make a marking (**4**) on the air inlet duct between the stainless steel pipe and the hose.

❏ Detach the hose from the stainless steel pipe.

❏ Remove:

- the stainless steel pipe mounting bolt (**5**) ,
- the stainless steel pipe (**6**) .

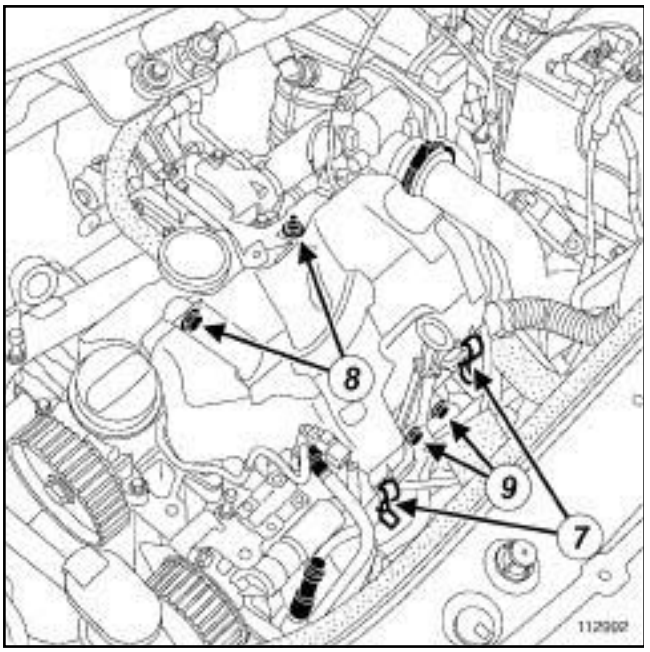

112992

❏ Unclip the injection rail protector cover (**7**) .

❏ Remove:

- the cover mounting nut and bolt (**8**) from the injector rail protector,
- the injector rail protector cover,
- the dipstick,
- the dipstick pipe mounting bolts (**9**) .

❏ Move the dipstick duct to one side.

II - OPERATION FOR REMOVAL OF PART CONCERNED

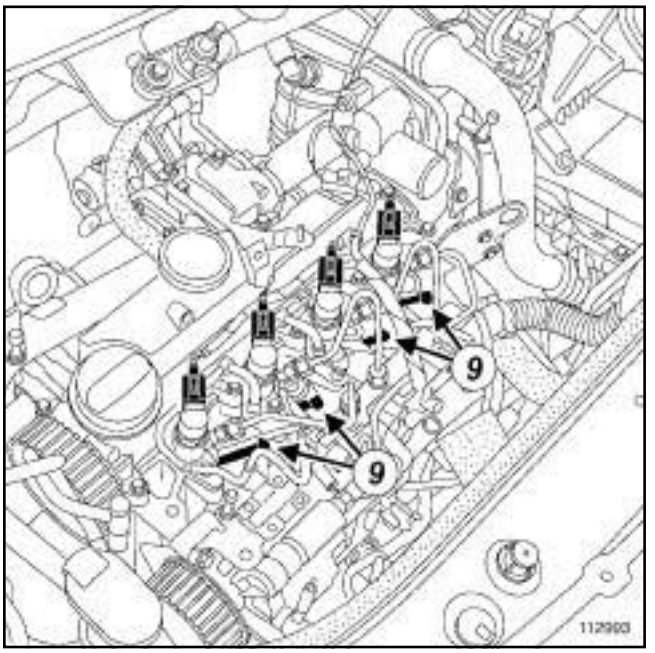

112993

❏ Disconnect the connector from the heater plug.

> Note:
>
> Do not pull on the plug cable.

❏ Clean around the outside of the heater plugs with a compressed air gun to prevent contamination of the cylinders.

❏ Loosen then remove the plugs using a **10 mm** diameter long radio socket connected to a universal joint.

❏ Use a hose to unscrew the plugs completely.

> **WARNING**
>
> Ensure that no foreign bodies enter the cylinder during this operation.

B84 or C84 or G84 or S84, and K9K, and 732 or 734

REFITTING

I - REFITTING OPERATION FOR PART CONCERNED

❏ Refit the heater plugs using the hose.

❏ Torque tighten the **heater plugs (15 Nm)**.

❏ Connect the connector to the heater plugs.

II - FINAL OPERATION.

❏ Refit:

- the mounting bolts to the dipstick tube,
- the dipstick,
- the injector rail protector cover,
- the injection rail protector mounting bolt and mounting nut.

❏ Clip on the injection rail protector cover.

❏ Refit:

- the clip on the stainless steel pipe if necessary,
- the stainless steel pipe on the hose, aligning the marking,

❏ Clip the stainless steel pipe to the turbocharger.

❏ Refit:

- the stainless steel pipe mounting bolt,
- the air inlet duct on the damper valve.

❏ Tighten the clip.

❏ Connect:

- the connector to the air inlet pressure sensor,
- the battery (see **Battery : Removal - Refitting**) (MR 364, 80A, Battery).

❏ Refit the engine covers.

B84 or C84 or E84 or K84 or L84, and M9R

Essential equipment
compressed air nozzle
hinged wrench for heater plug
diagnostic tool

Tightening torques ▽	
heater plugs	**18 N.m**

REMOVAL

I - REMOVAL PREPARATION OPERATION

❑ Remove the front engine cover.

❑ Disconnect:

- the battery (see **Battery: Removal - Refitting**) (80A, Battery),
- the heater plug connectors.

❑ Clean around the plugs using a **compressed air nozzle** to prevent any impurities from entering the cylinders.

II - OPERATION FOR REMOVAL OF PART CONCERNED

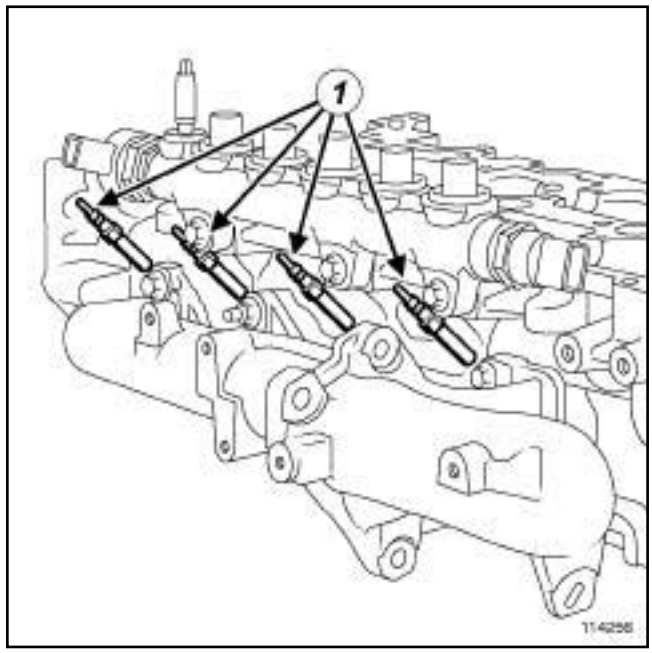

114256

❑ Remove the plugs (**1**) using a **hinged wrench for heater plug** or a **10 mm long socket** (if necessary, use a hose to unscrew the heater plugs completely).

> Note:
>
> Ensure that no impurities enter the cylinders during this operation.

B84 or C84 or E84 or K84 or L84, and M9R

REFITTING

I - REFITTING PREPARATION OPERATION

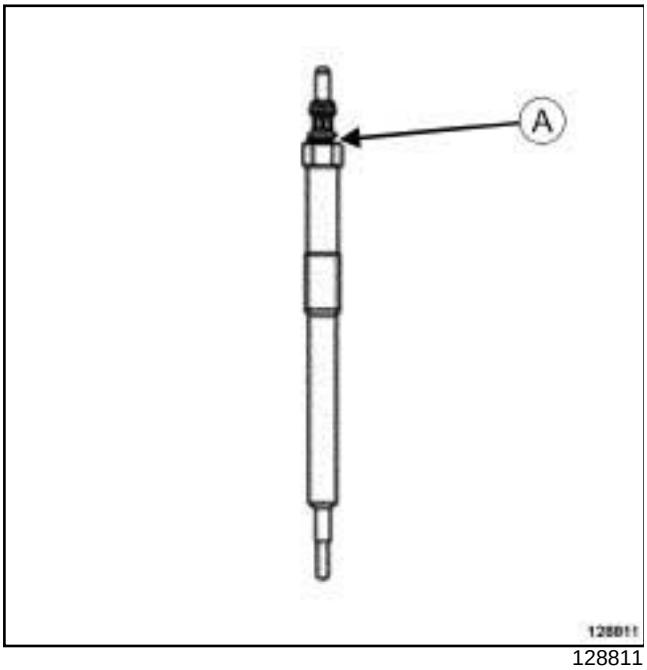

128811

❑ **If replacing the heater plugs:**

- check the colour of the ring (**A**) of the heater plug removed,
- if the ring is **black**, always replace the four heater plugs of the engine by heater plugs with a white ring.

❑ Before connecting the heater plug connectors:

- reprogram the injection computer (see **Fault finding - Replacement of components**) (13B, Diesel injection),
- reconfigure the type of heater plugs to the « quick » type(see **Fault finding - Replacement of components**) (13B, Diesel injection).

> Note:
>
> The parts department only supplies heater plugs that have a **white** ring.

II - REFITTING OPERATION FOR PART CONCERNED

❑ Fit the heater plugs without tightening them.

❑ Torque tighten the **heater plugs (18 N.m)**.

III - FINAL OPERATION

❑

> **WARNING**
>
> Failure to observe the following procedure can lead to the destruction of the heater plugs.

❑ When replacing heater plugs with a **black** ring by heater plugs with a **white** ring:

- connect the **diagnostic tool**,
- reprogram the injection computer (see **Fault finding - Replacement of components**) (13B, Diesel injection),
- reconfigure the type of heater plugs to the « quick » type(see **Fault finding - Replacement of components**) (13B, Diesel injection).
- disconnect the **diagnostic tool**.

❑ Connect:

- the heater plug connectors,
- the battery (see **Battery : Removal - Refitting**) (80A, Battery).

❑ Refit the front engine cover.

B84 or C84 or G84 or S84, and K9K, and 724

Essential equipment
tool for removing heater plugs
hinged wrench for heater plug

Tightening torques ▽	
heater plugs	**15 N.m**

REMOVAL

I - REMOVAL PREPARATION OPERATION

❏ Remove the front engine cover.

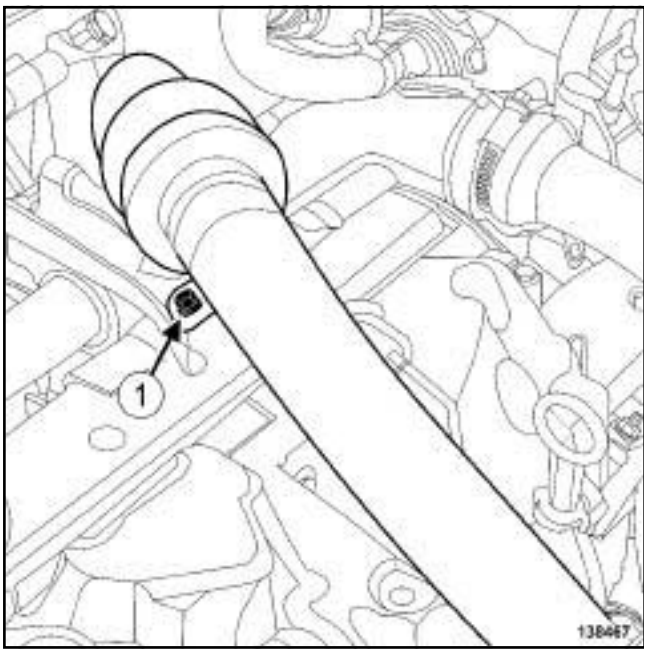

138467

❏ Remove the bolt (**1**) on the intercooler air inlet pipe.

123299

❏ Pull the clip from the intercooler air inlet pipe.

❏ Disconnect the intercooler air inlet pipe from the turbocharger.

❏ Remove the intercooler inlet air pipe.

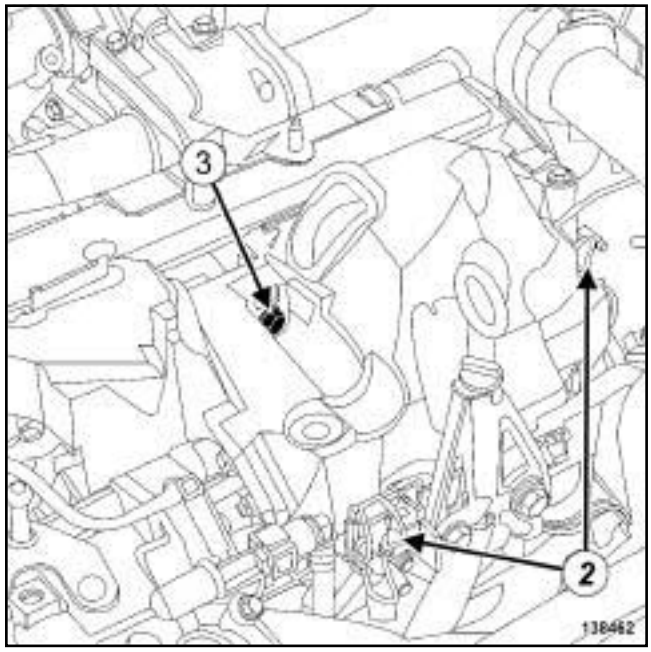

138462

❏ Unclip the injector rail protector cover at (**2**) .

❏ Remove:

- the injector rail protector cover bolt (**3**) ,

- the injector rail protector cover,

B84 or C84 or G84 or S84, and K9K, and 724

II - OPERATION FOR REMOVAL OF PART CONCERNED

123294

❑ Disconnect the heater plug connectors (**4**) .

> **IMPORTANT**
> Wear goggles with side protectors for this operation.

❑ Clean around the outside of the heater plugs with a compressed air gun to prevent any impurities from entering the cylinders.

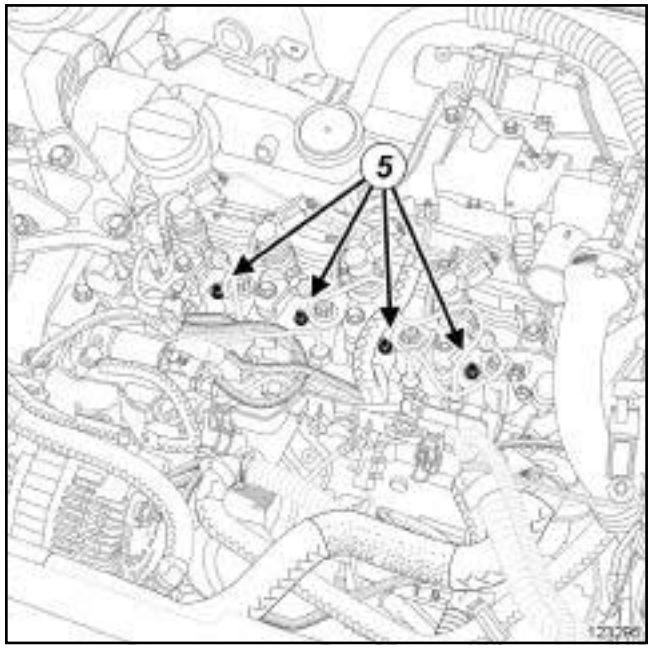

123295

❑

> Note:
> If the heater plugs are seized, use the heater plug removal tool (see **tool for removing heater plugs**)(Technical Note 5197A, 06A, Tooling).

❑ Unscrew the heater plugs (**5**) using a **10 mm** long radio socket connected to a universal joint or a **hinged wrench for heater plug**.

❑ Use a hose to unscrew the heater plugs completely (**5**) .

❑ Remove the preheater plugs (**5**) .

REFITTING

I - REFITTING OPERATION FOR PART CONCERNED

❑ Without tightening, fit the heater plugs using the hose.

❑ Torque tighten the **heater plugs (15 N.m)**.

❑ Connect the heater plug connectors.

II - FINAL OPERATION

❑ Refit the injector rail protector cover.

❑ Fit the intercooler air inlet pipe.

❑ Clip the intercooler air inlet pipe on the turbocharger.

❑ Refit the engine cover.

B84 or C84 or G84 or S84, and F4R – B84 or C84 or G84 or S84, and K4J – B84 or C84 or G84 or S84, and K4M

I - CHECKING THE OPERATION OF THE FUEL VAPOUR ABSORBER BLEED

❑

> Note:
>
> A fault with this system may result in rough idling or the engine stalling.

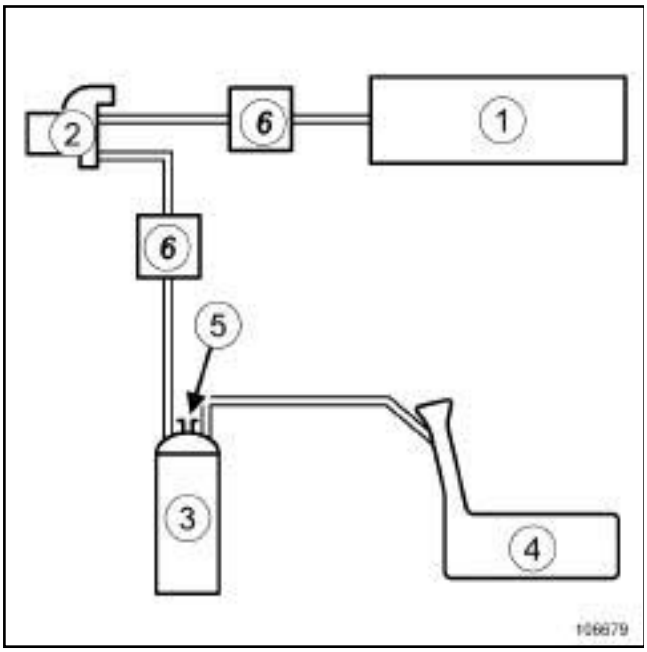

106679

(**1**)	Inlet manifold
(**2**)	Fuel vapour absorber bleed solenoid valve
(**3**)	Fuel vapour absorber
(**4**)	Tank
(**5**)	Breather
(**6**)	Anti-return valve (F4R 776 only)

❑ Check the conformity of the circuit (see **Petrol vapour rebreathing: Operation**) .

❑ Check the condition of the pipes to the tank.

II - FUEL VAPOUR ABSORBER BLEEDING CONDITIONS

❑ The fuel vapour absorber bleed solenoid valve is controlled by track C-E1 of the computer if:

- the coolant temperature is above **55°C**,
- the air temperature is above **10°C**,
- the engine is not at idle speed,
- a given load threshold is reached,
- the throttle potentiometer is not in the « no load » position.

During « on board diagnostic » fault finding, fuel vapour absorber bleeding is not authorised.

It is possible to display the fuel vapour absorber bleed solenoid valve opening cyclic ratio with the diagnostic tools by consulting parameter PR102: **Fuel vapour absorber bleed solenoid valve OCR**.

The solenoid valve is closed for a value below **1.2%**.

B84 or C84, and F4R, and 774

I - CHECKING THE OPERATION OF THE FUEL VAPOUR ABSORBER BLEED

❑

> Note:
>
> A fault with this system may result in rough idling or the engine stalling.

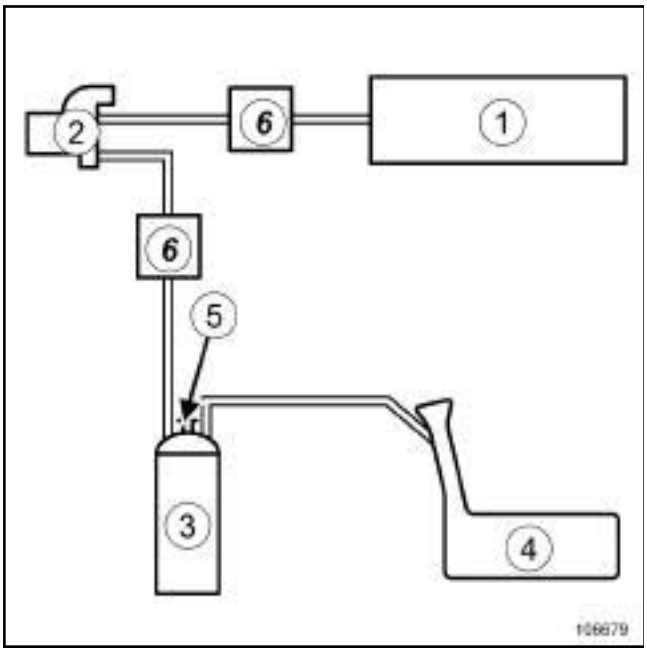

106679

(**1**)	Inlet manifold
(**2**)	Fuel vapour absorber bleed solenoid valve
(**3**)	Fuel vapour absorber
(**4**)	Tank
(**5**)	Breather
(**6**)	Anti-return valve

❑ Check the conformity of the circuit (see **Fuel vapour recirculation circuit: Function**) .

❑ Check the condition of the pipes to the tank.

II - FUEL VAPOUR ABSORBER BLEEDING CONDITIONS

❑ The fuel vapour absorber bleed solenoid valve is controlled by track C-E1 of the computer if:

- the coolant temperature is above **55°C**,
- the air temperature is above **10°C**,
- the engine is not at idle speed,
- a given load threshold is reached,
- the throttle potentiometer is not in the « no load » position.

During « on board diagnostic » fault finding, fuel vapour absorber bleeding is not authorised.

It is possible to display the fuel vapour absorber bleed solenoid valve opening cyclic ratio with the diagnostic tools by consulting parameter **PR102 « Fuel vapour absorber bleed solenoid valve OCR »** .

The solenoid valve is closed for a value below **1.2%**.

B84 or C84 or G84 or S84, and F4R, and 770 or 771 or 776 – B84 or C84 or G84 or S84, and K4J – B84 or C84 or G84 or S84, and K4M

The absorber is located on the fuel tank under the vehicle.

REMOVAL

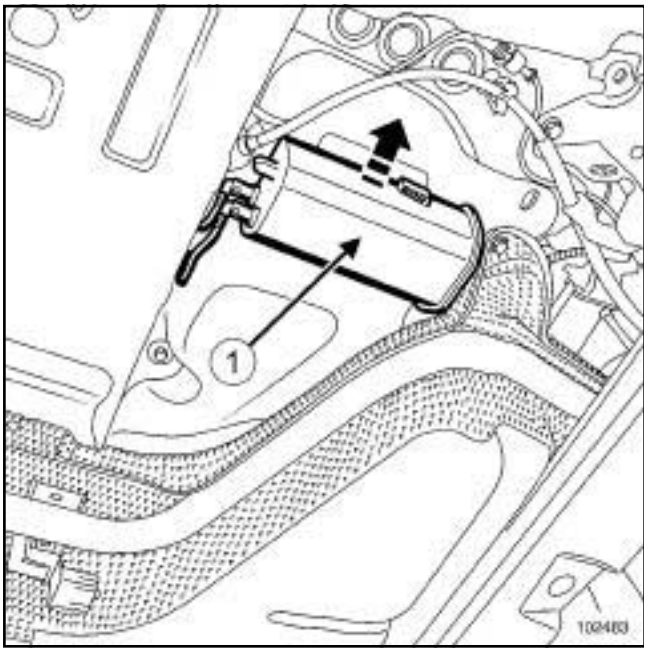

102483

❑ Remove the absorber (**1**) from the fuel tank retaining notch by pushing it in the direction of the arrow.

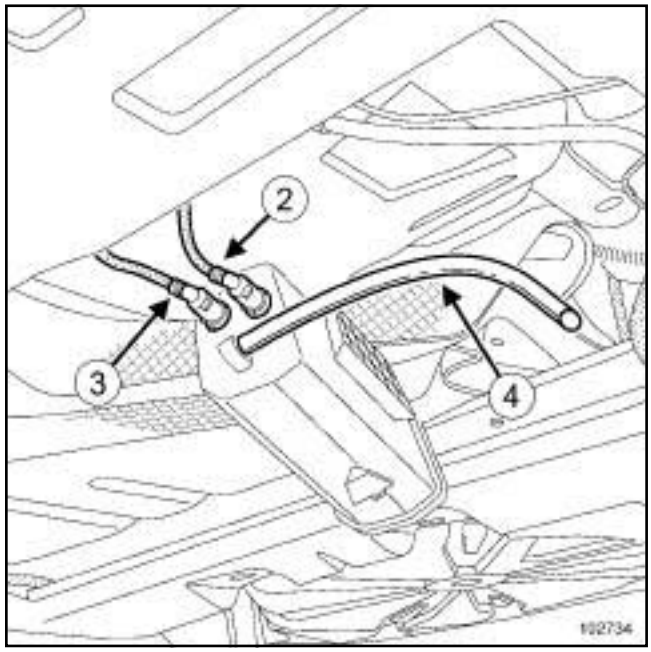

102734

❑ Disconnect:

- the tank vapour inlet pipe (**2**) ,
- the pipe (**3**) circulating vapours to the solenoid valve,
- the breather pipe (**4**) .

❑ Remove the absorber.

REFITTING

❑ Proceed in the reverse order to removal.

B84 or C84, and F4R, and 774

The absorber is located on the fuel tank under the vehicle.

REMOVAL

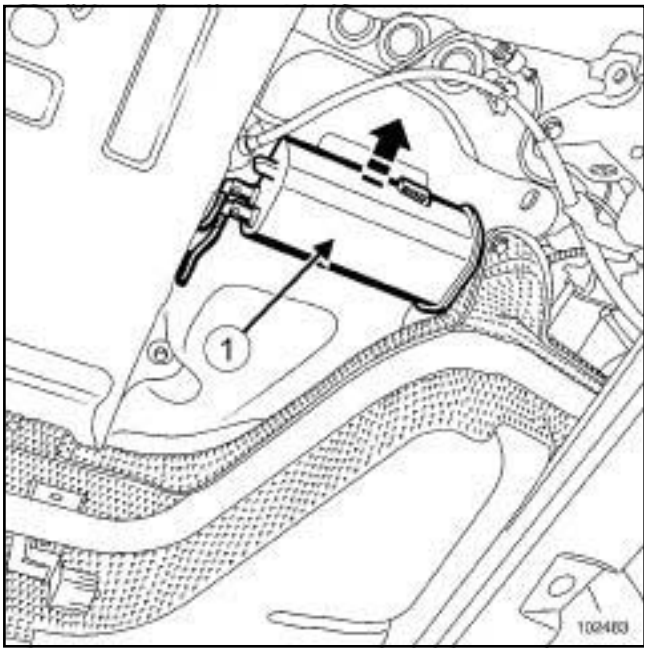

102483

❑ Release absorber (**1**) from the fuel tank retaining notch by pushing it in the direction of the arrow.

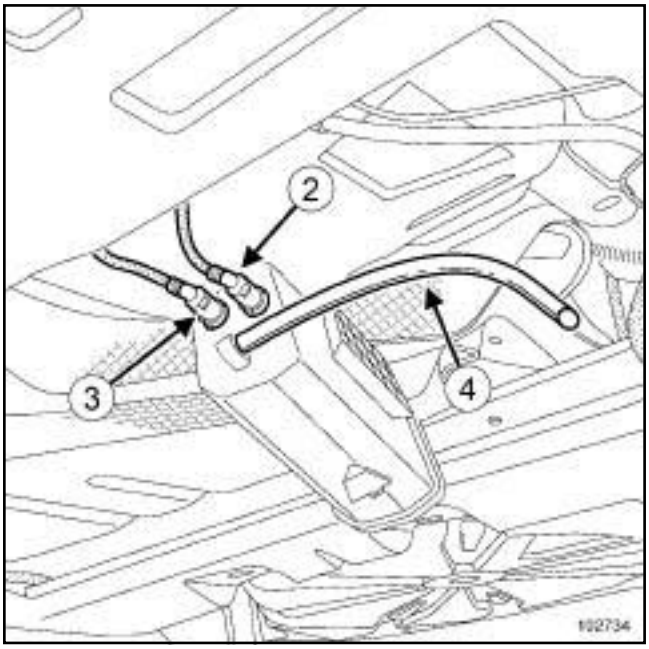

102734

❑ Disconnect:

- the pipe (**2**) bringing the fuel vapour from the tank,
- pipe (**3**) taking the fuel vapours to the solenoid valve,
- the breather pipe (**4**) .

❑ Remove the absorber.

REFITTING

❑ Proceed in the reverse order to removal.

B84 or C84 or G84 or S84, and F4R, and 770 or 771 or 776 – B84 or C84 or G84 or S84, and K4J – B84 or C84 or G84 or S84, and K4M

Essential special tooling	
Mot. 1311-01	Fuel pressure test kit.

CHECKING THE FUEL VAPOUR ABSORBER

❏ On the fuel vapour absorber, cap the circuit coming from the tank.

❏ Connect the pressure gauge of the **(Mot. 1311-01)** to the absorber breather outlet.

❏ With the engine idling, check that there is no vacuum at the absorber breather outlet (in the same way, the command value displayed by the diagnostic tool in parameter: **Fuel vapour absorber bleed solenoid valve OCR** remains minimal **X equal to or less than 1.5%**).

Is there a vacuum?

- Yes: with the ignition off, use a vacuum pump to apply a vacuum of **500 mbar** to the solenoid valve outlet. The vacuum pressure should not vary by more than **10 mbar** over **30 seconds**.

  Does the pressure vary?

  • Yes: the solenoid valve is faulty, replace it.

  • No: there is an electrical fault, check the circuit.

- No: under bleeding conditions (see « bleeding conditions »), the vacuum should increase (at the same time, the parameter value on the diagnostic tool should also increase).

CHECKING THE FUEL VAPOUR ABSORBER TANK CONNECTION

❏ Check this connection by connecting a vacuum pump to the pipe going to the absorber.

B84 or C84, and F4R, and 774

Essential special tooling	
Mot. 1311-01	Fuel pressure test kit.

Essential equipment
diagnostic tool

CHECKING THE FUEL VAPOUR ABSORBER

❏ On the fuel vapour absorber, cap the circuit coming from the tank.

❏ Connect the pressure gauge of the **(Mot. 1311-01)** to the absorber breather outlet.

❏ With the engine idling, check that there is no vacuum at the absorber breather outlet (in the same way, the command value read by the **diagnostic tool** in parameter: **Fuel vapour absorber bleed solenoid valve OCR** remains minimal X equal to or less than **1.5 %**).

❏ Is there a vacuum?

- Yes: with the ignition off, use a vacuum pump to apply a vacuum of **500 mbar** to the outlet solenoid valve. The vacuum pressure should not vary by more than **10 mbar** over **30 seconds**.

  Does the pressure vary?

  • Yes: the solenoid valve is faulty, replace it.

  • No: there is an electrical fault, check the circuit.

- No: under bleeding conditions, the vacuum should increase (at the same time the parameter value on the diagnostic tool should also increase).

CHECKING THE FUEL VAPOUR ABSORBER-TANK CONNECTION

❏ Check this connection by connecting a vacuum pump to the pipe going to the absorber.

B84 or C84 or S84, and K4J, and 730 or 732 or 740

I - LOCATION OF COMPONENTS

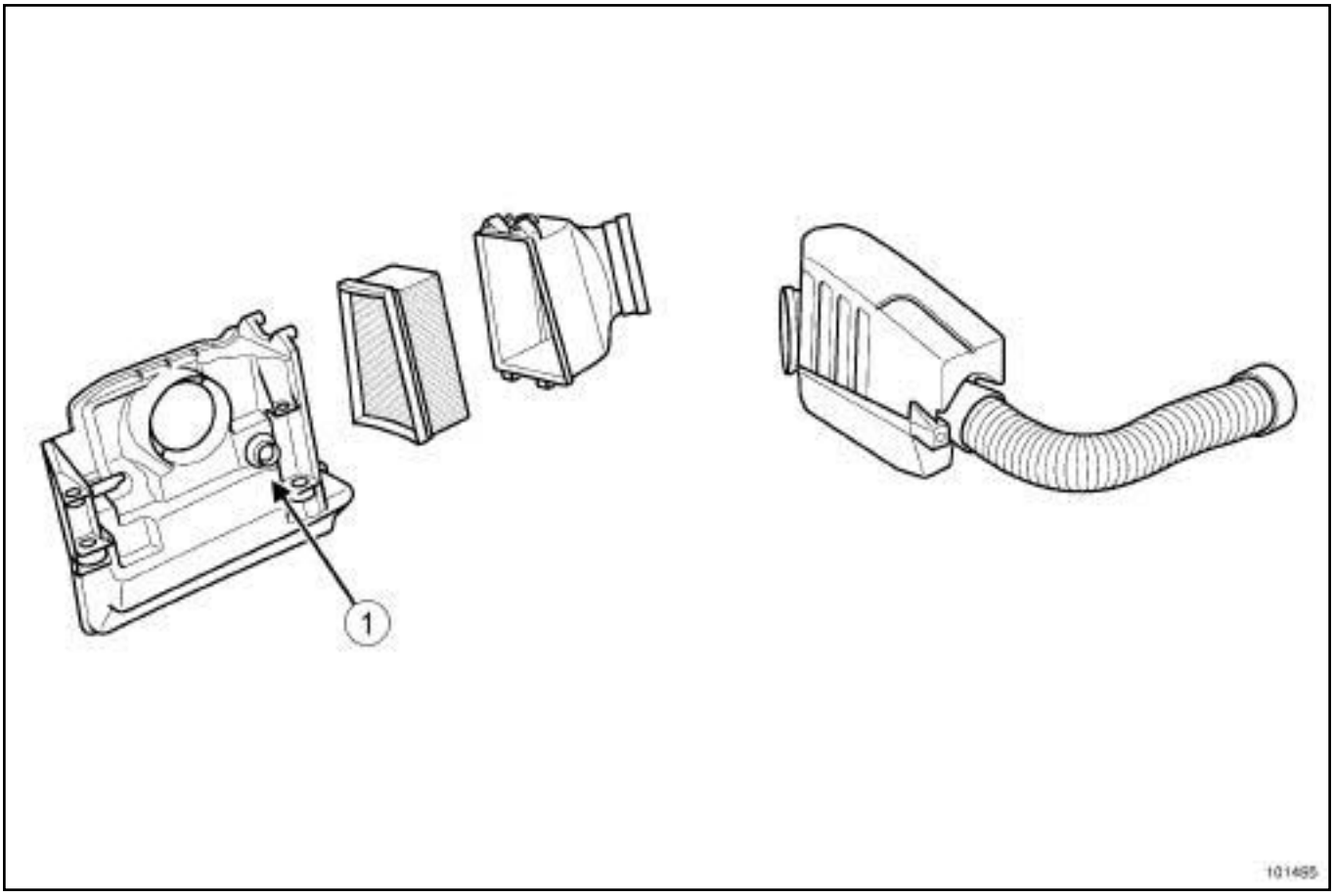

101495

(**1**) Oil vapour breather port

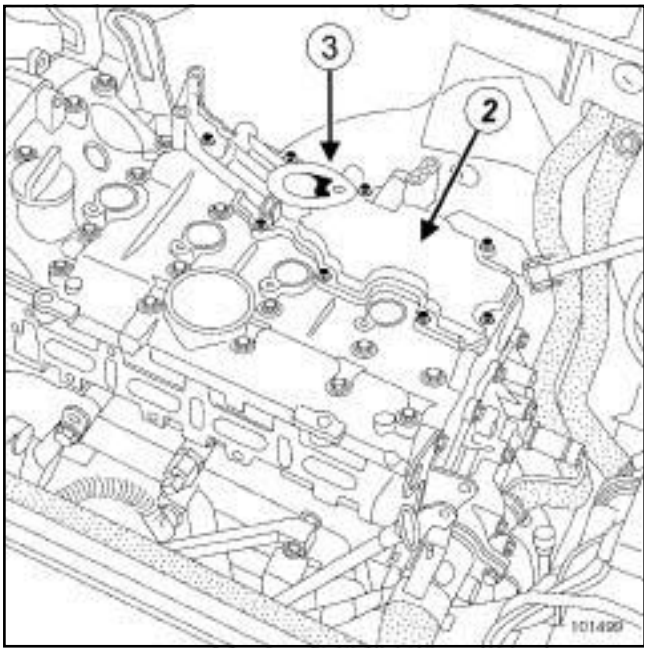

101499

(**2**) Oil vapour recovery plate located on the cylinder head cover

(**3**) Sized port

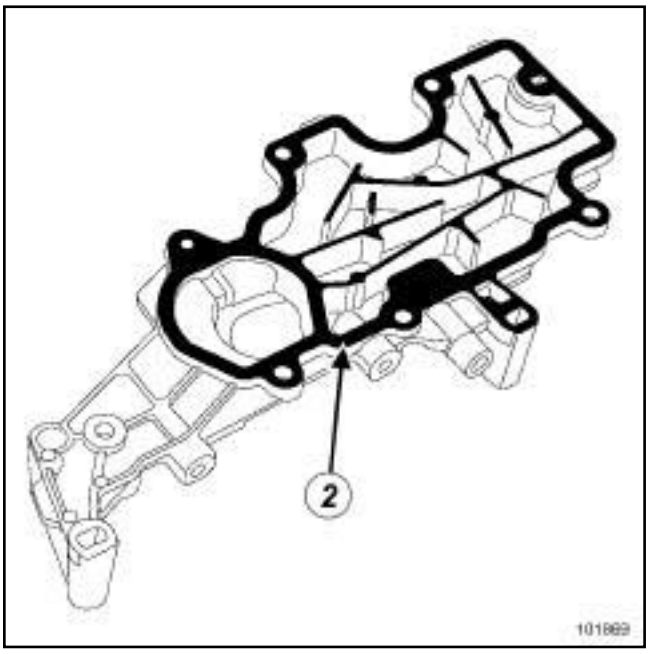

101869

B84 or C84 or S84, and K4J, and 730 or 732 or 740

To remove the oil vapour recovery plate (**2**) (see **Cylinder head: Tightening torque**) (MR 364, 11A, Top and front of engine).

II - OPERATING DIAGRAM

A: At low loads, small quantities of oil vapour are sucked back in via sized opening (7).

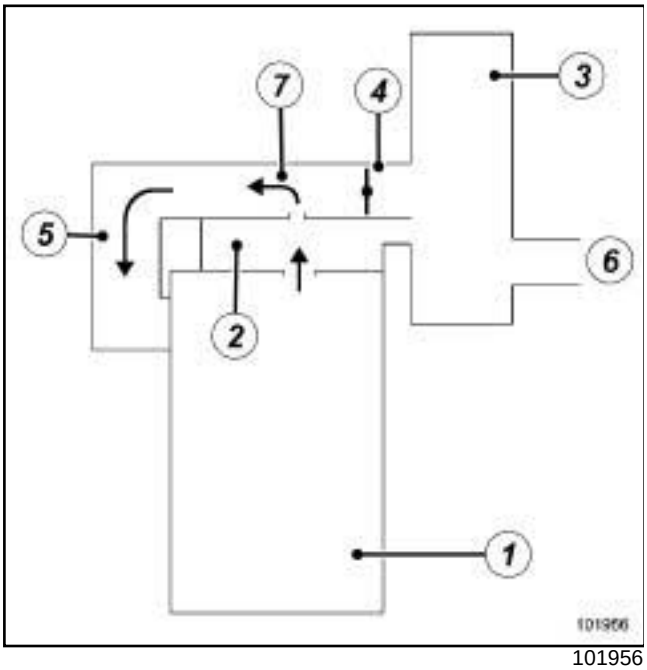

101956

B: At medium and high loads, large quantities of oil vapour are sucked in by the gas throttle.

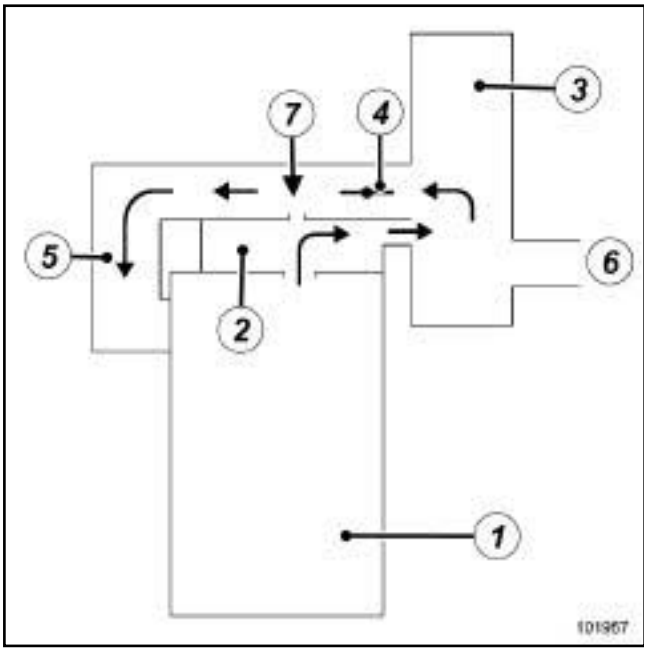

101957

(**1**)	Engine
(**2**)	Oil vapour recovery plate
(**3**)	Air unit
(**4**)	Motorised throttle valve
(**5**)	Inlet manifold
(**6**)	Air inlet
(**7**)	Sized port

III - CHECK

To ensure the antipollution system works properly, the oil vapour rebreathing circuit must be kept clean and in good condition.

B84 or C84 or G84 or S84, and K4M, and 760 or 761 or 766 or 812 or 813

I - LOCATION OF COMPONENTS

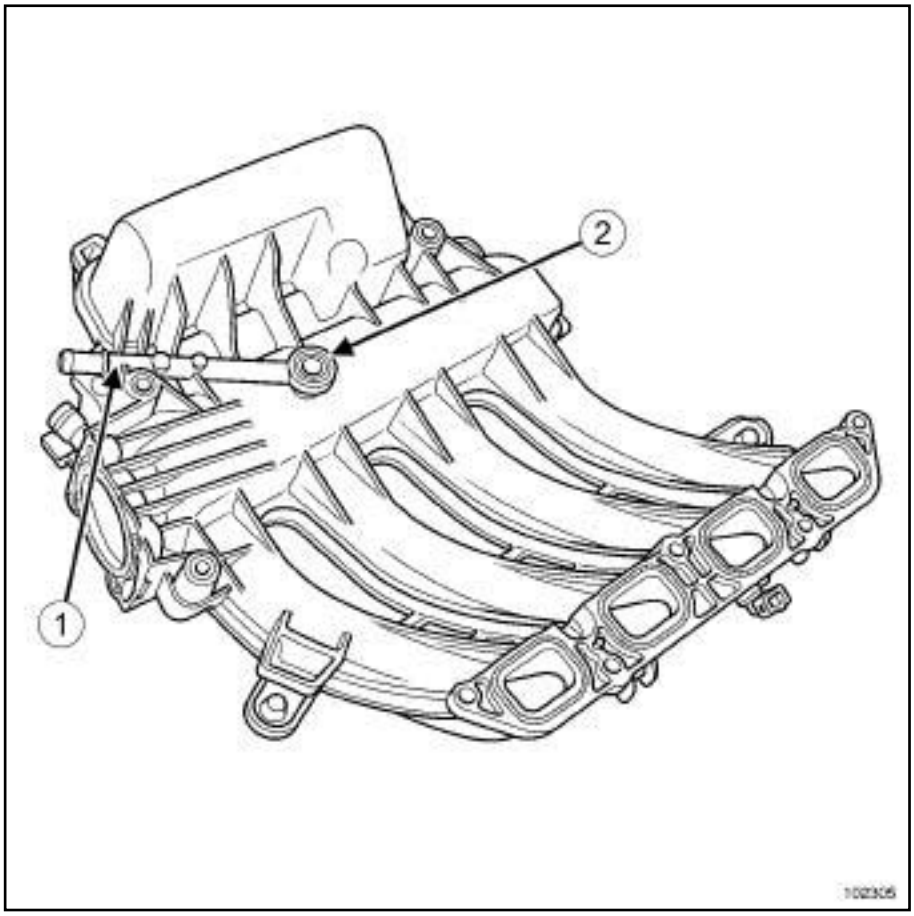

102305

(**1**) Oil vapour breather pipe

(**2**) Sized opening

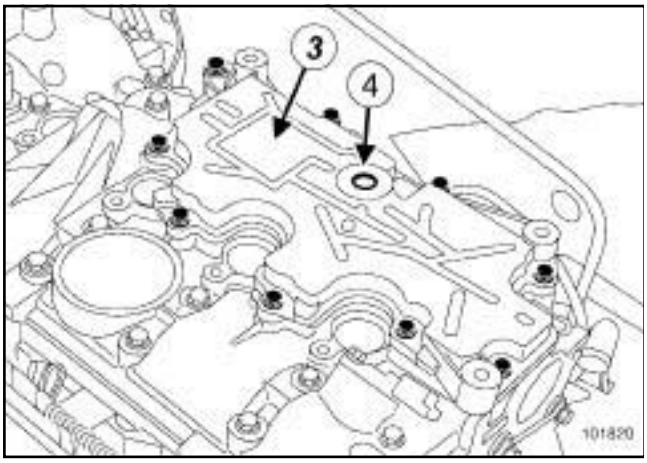

101820

(**3**) Oil vapour recovery plate on the cylinder head cover

(**4**) Oil vapour breather pipe

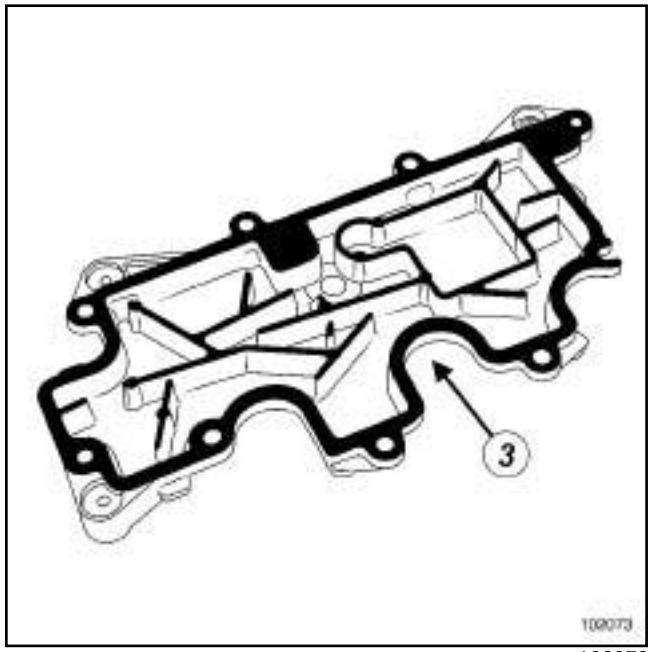

102073

To remove the oil vapour recovery plate (**3**) , (see **11A, Top and front of engine, Cylinder head gasket**).

B84 or C84 or G84 or S84, and K4M, and 760 or 761 or 766 or 812 or 813

II - OPERATING DIAGRAM

A: At low loads, the oil vapours are rebreathed in small quantities through the calibrated jet (6)

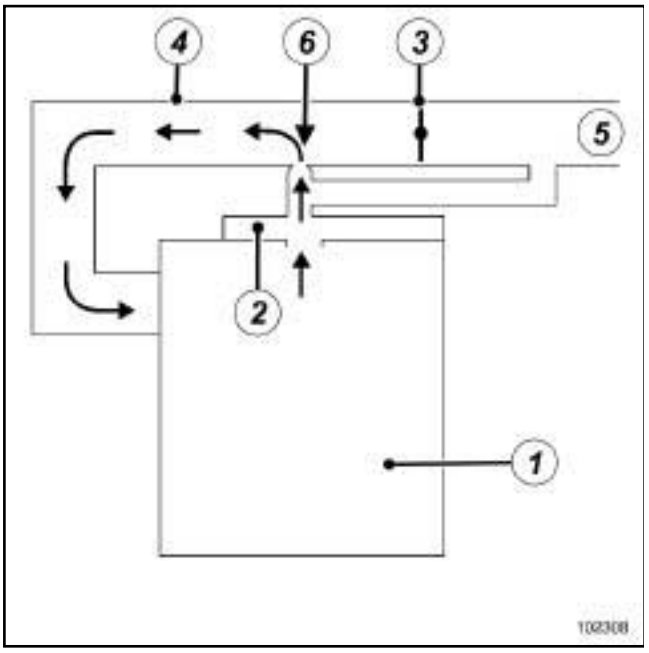

102308

B: Under average and heavy loads, the oil vapours are rebreathed in large quantities through the gas throttle valve.

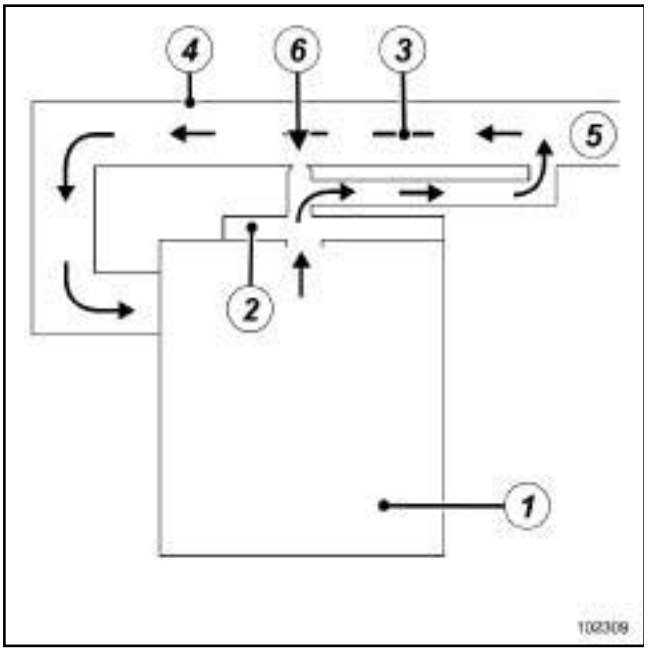

102309

(**1**)	Engine
(**2**)	Oil vapour recovery plate
(**3**)	Motorised throttle
(**4**)	Inlet manifold
(**5**)	Air inlet
(**6**)	Sized opening

III - CHECK

To ensure the antipollution system works properly, the oil vapour rebreathing circuit must be kept clean and in good condition.

B84 or C84 or G84 or S84, and K9K, and 722 or 724 or 728 or 729 or 732

I - PRESENTATION OF THE CIRCUIT

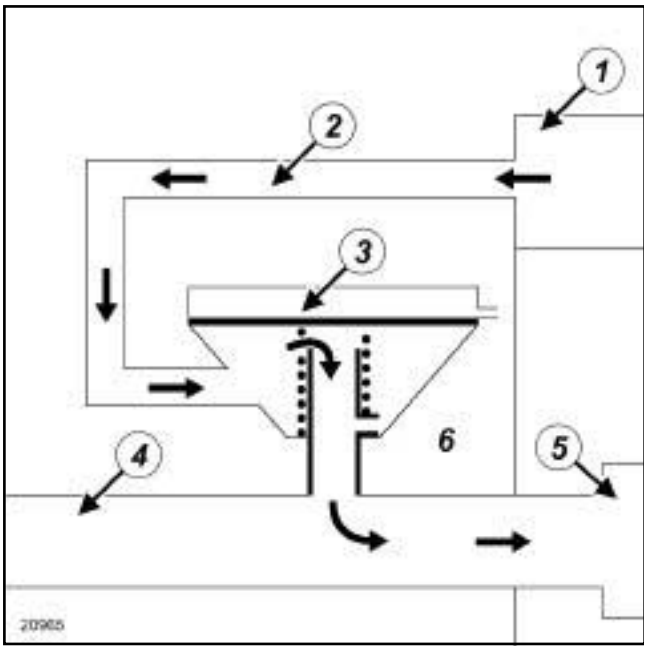

20965

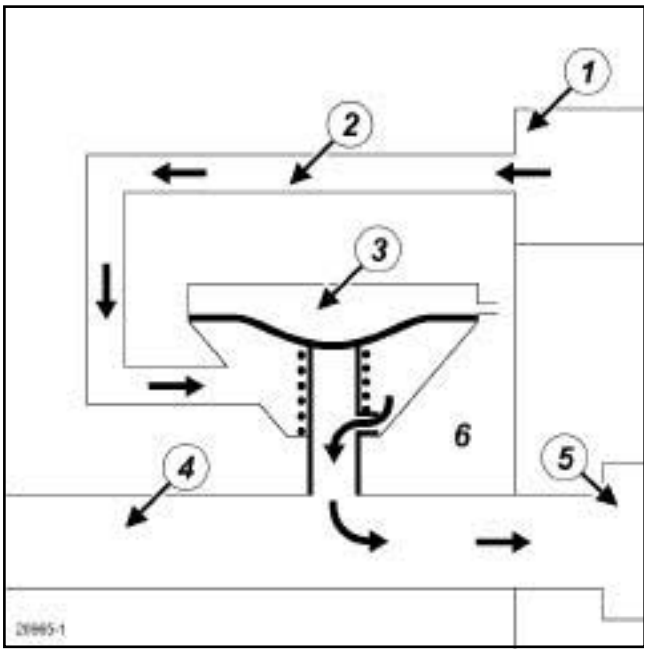

20965-1

(**1**)	Cylinder head cover
(**2**)	Oil vapour breather pipe
(**3**)	Oil vapour rebreathing valve
(**4**)	Air intake duct
(**5**)	Turbocharger
(**6**)	Atmospheric pressure

A: At low load, the vacuum pressure prevailing in the air inlet duct is below the spring calibration. Large quantities of oil vapour are sucked back in by the vacuum prevailing in the air inlet duct.

B: At medium or high load, the vacuum pressure prevailing in the air inlet tract pulls the valve diaphragm, small quantities of oil vapour are sucked in via a calibrated aperture.

II - CHECK

To ensure the antipollution system works properly, the oil vapour rebreathing circuit must be kept clean and in good condition.

B84, and F9Q

I - PRESENTATION OF THE CIRCUIT

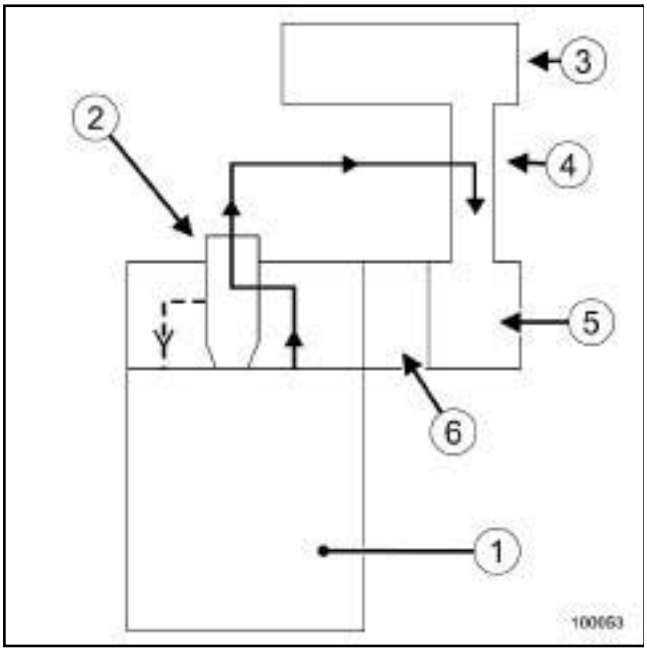

100053

(**1**)	Engine
(**2**)	Oil decanter
(**3**)	Air filter unit
(**4**)	Air duct
(**5**)	Turbocharger
(**6**)	Intake distributor

II - CHECK

To ensure the antipollution system works properly, the oil vapour rebreathing circuit must be kept clean and in good condition.

B84 or C84 or G84 or S84, and F4R, and 770 or 771 or 776

I - PRESENTATION OF COMPONENTS

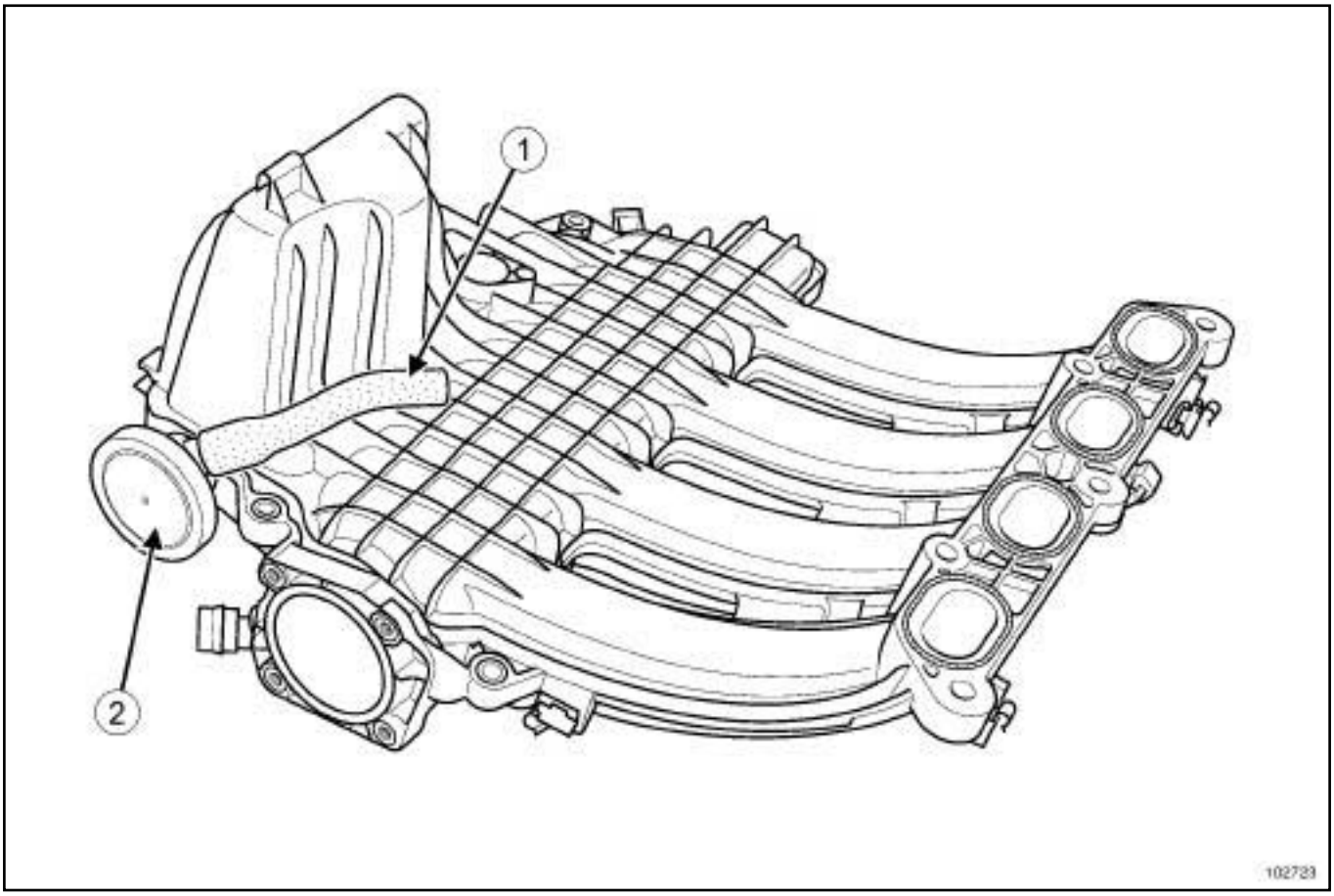

102723

(**1**) Oil vapour rebreathing duct

(**2**) Oil vapour recirculation valve

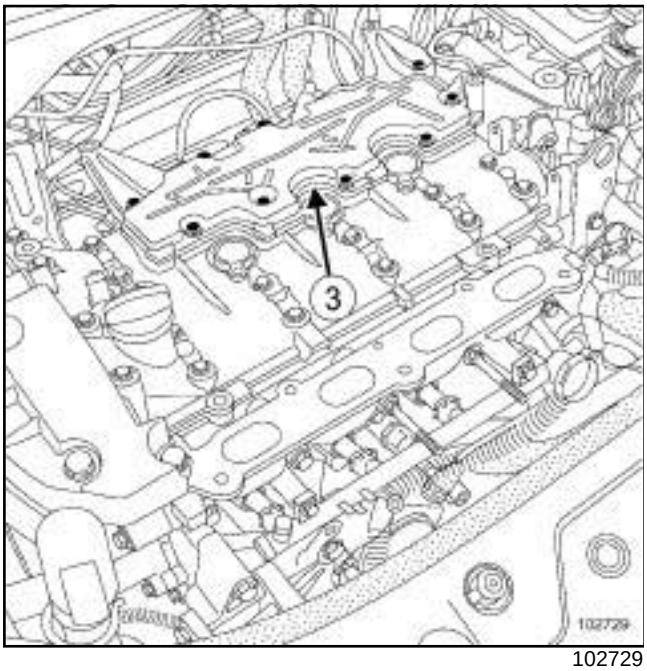

102729

(**3**) Oil vapour recovery plate located on the rocker cover

B84 or C84 or G84 or S84, and F4R, and 770 or 771 or 776

F4R, and 776

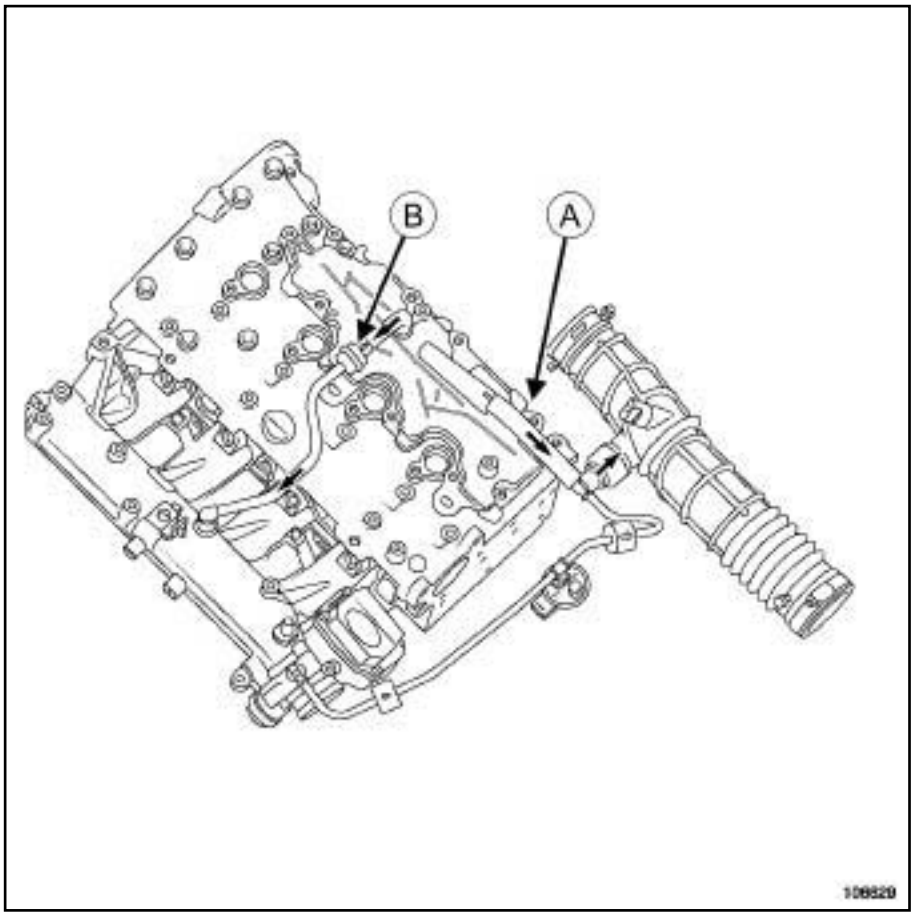

106629

(**A**) Circuit upstream of turbocharger, used for medium and high loads. The vapour is sucked back in by the prevailing vacuum pressure in the inlet manifold

(**B**) Circuit downstream of throttle valve, used for low loads. The vapour is sucked back in by the prevailing vacuum pressure between the throttle and engine

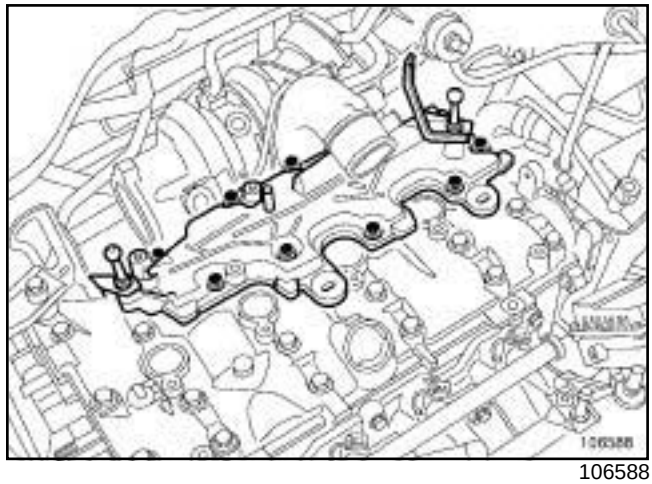

106588

Oil vapour recovery plate located on the rocker cover

B84 or C84 or G84 or S84, and F4R, and 770 or 771 or 776

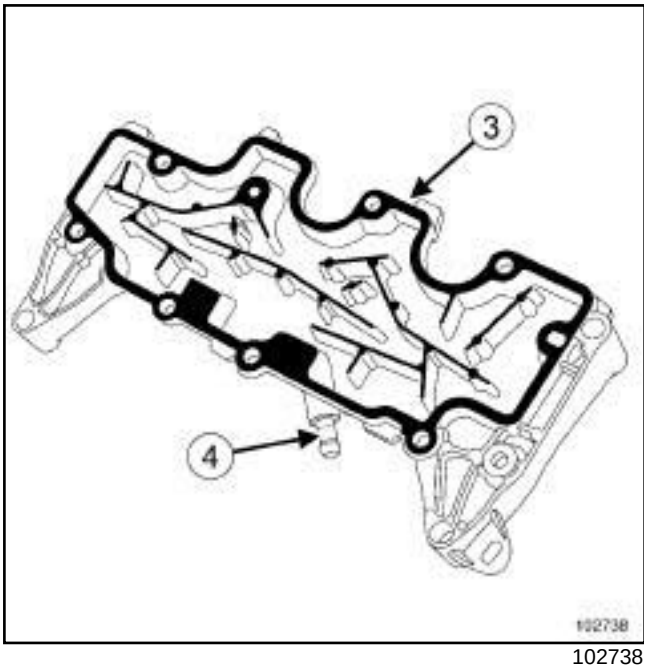

102738

(**4**) Throttle upstream oil vapour recirculation aperture

For removal, (see **11A, Top and front of engine, Cylinder head gasket**).

II - OIL VAPOUR RECIRCULATION CIRCUIT

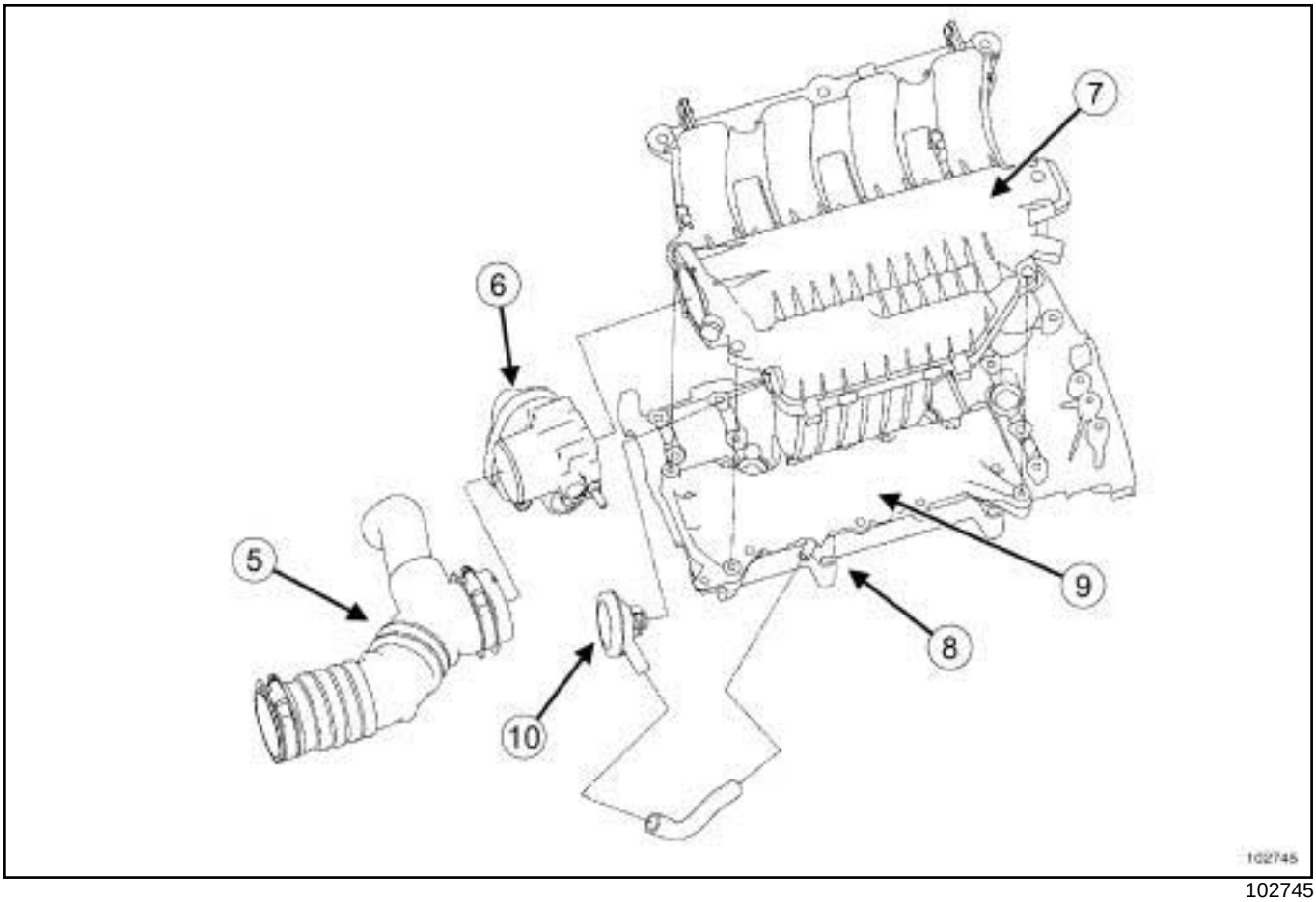

102745

B84 or C84 or G84 or S84, and F4R, and 770 or 771 or 776

(**5**)	Air duct
(**6**)	Throttle valve
(**7**)	Intake distributor
(**8**)	Throttle upstream oil vapour recirculation aperture
(**9**)	Oil vapour recovery plate
(**10**)	Oil vapour recirculation valve

III - CHECK

To ensure the antipollution system works properly, the oil vapour rebreathing circuit must be kept clean and in good condition.

B84 or C84 or G84 or S84, and F9Q, and 803 or 804

DIAGRAM

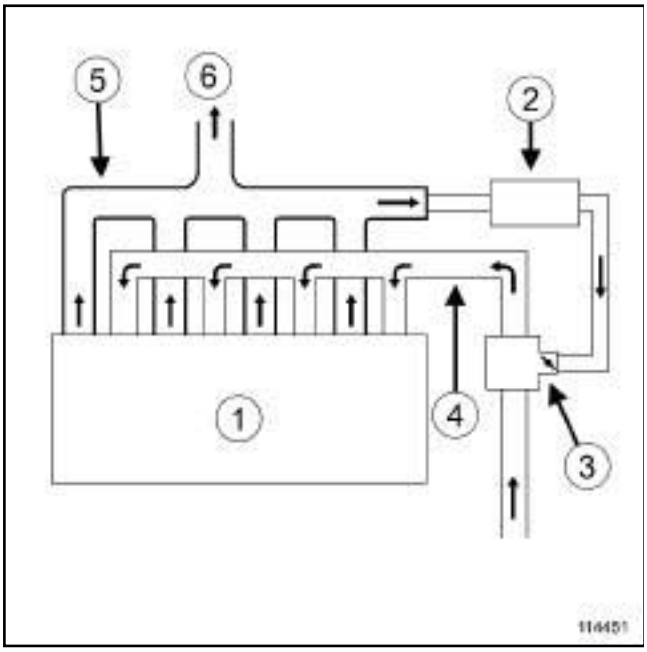

114451

(**1**)	Engine
(**2**)	Intercooler
(**3**)	Exhaust gas recirculation unit
(**4**)	Inlet manifold
(**5**)	Exhaust manifold
(**6**)	Turbocharger

Oil vapour rebreathing system: Operating diagram

B84 or C84 or G84 or S84, and F9Q, and 800 or 808

PRESENTATION OF THE CIRCUIT

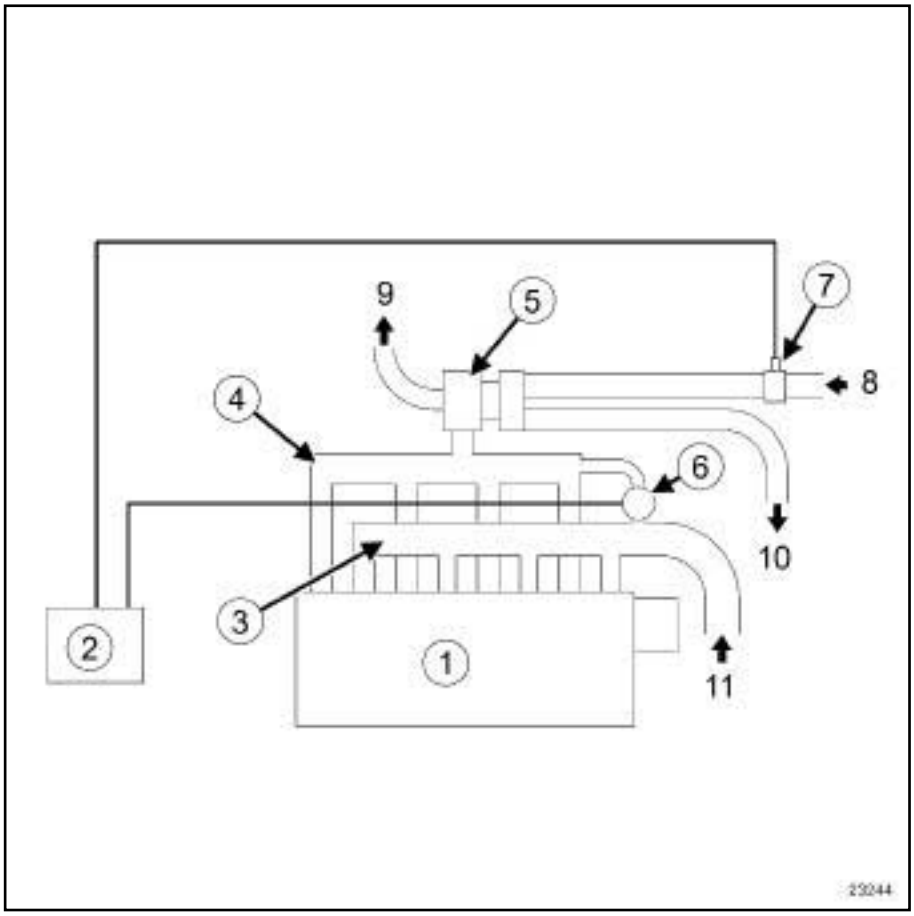

23244

(**1**)	Engine
(**2**)	Injection computer
(**3**)	Inlet manifold
(**4**)	Exhaust manifold
(**5**)	Turbocharger
(**6**)	Exhaust gas recirculation solenoid valve
(**7**)	Air flowmeter
(**8**)	Air inlet
(**9**)	Exhaust pipe
(**10**)	Intercooler inlet
(**11**)	Intercooler outlet

B84 or C84 or G84 or S84, and F9Q, and 803 or 804 or 816 or 818

DIAGRAM

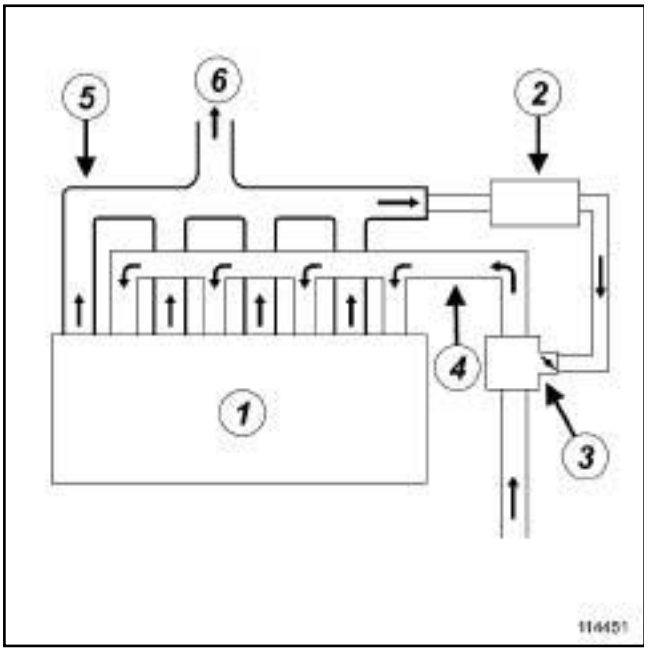

114451

(**1**)	Engine
(**2**)	Intercooler
(**3**)	Exhaust gas recirculation unit
(**4**)	Inlet manifold
(**5**)	Exhaust distributor
(**6**)	Turbocharger

Exhaust gas recirculation: Operating diagram

B84 or C84 or G84 or S84, and F9Q, and 800 or 808

PRESENTATION OF THE CIRCUIT

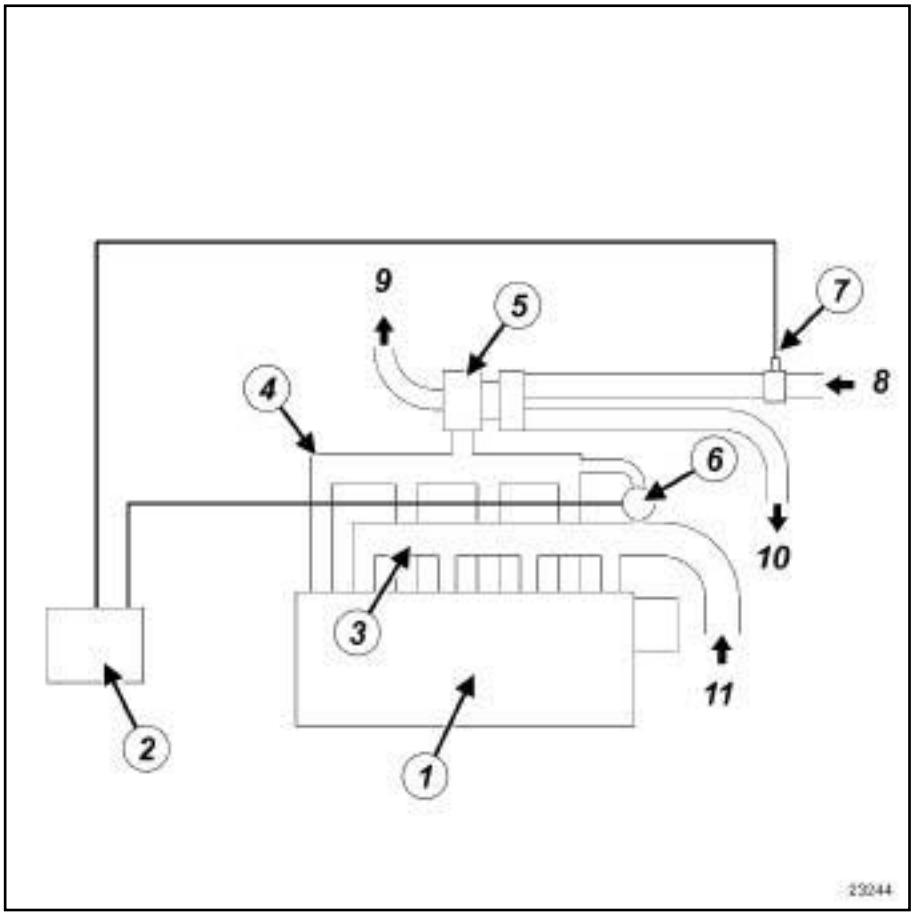

23244

(**1**)	Engine
(**2**)	Injection computer
(**3**)	Inlet manifold
(**4**)	Exhaust manifold
(**5**)	Turbocharger
(**6**)	Exhaust gas recirculation solenoid valve
(**7**)	Airflow meter
(**8**)	Air inlet
(**9**)	Exhaust pipe
(**10**)	Intercooler inlet
(**11**)	Intercooler outlet

B84 or C84 or E84 or K84 or L84, and M9R

I - PRESENTATION OF THE CIRCUIT

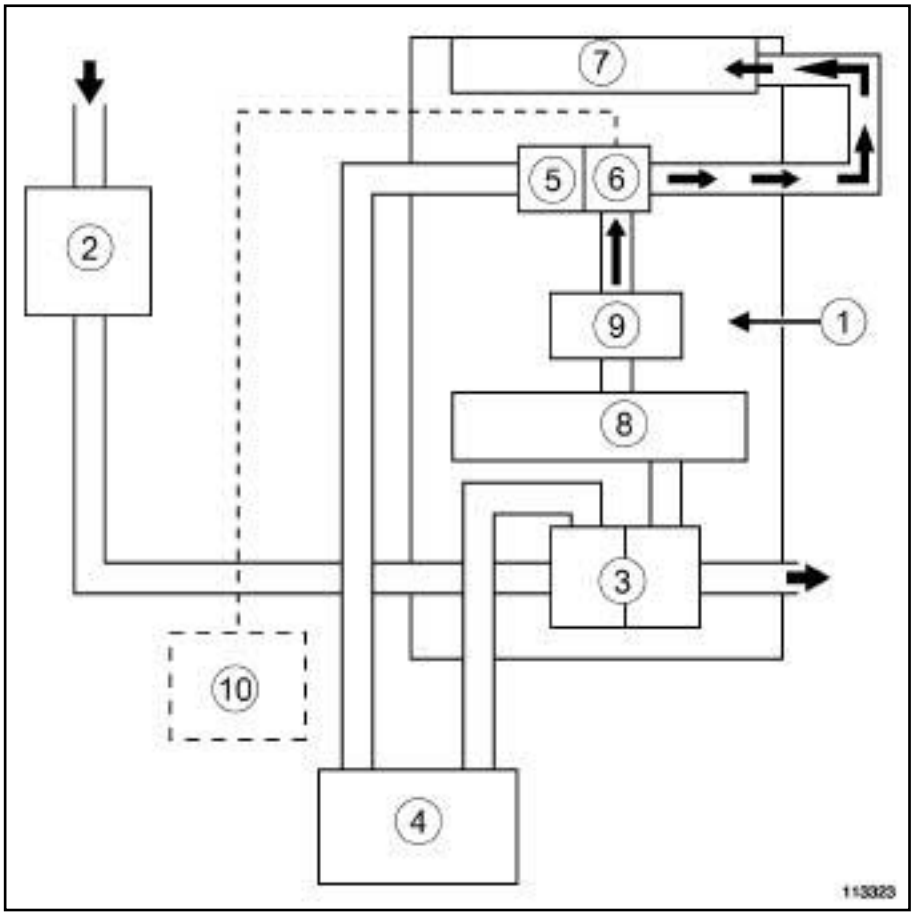

113323

(**1**)	Engine
(**2**)	Air filter box
(**3**)	Turbocharger
(**4**)	Intercooler
(**5**)	Air inlet valve
(**6**)	EGR solenoid valve
(**7**)	Intake distributor
(**8**)	Exhaust manifold
(**9**)	EGR cooler
(**10**)	Injection computer

II - PURPOSE OF THE EXHAUST GAS RECIRCULATION SYSTEM

Exhaust gas circulation is used to reduce the concentration of nitrogen oxides (**NOx**) in exhaust fumes.

The injection computer authorises the flow of gas by controlling a solenoid valve between the air supply circuit and the engine gas exhaust circuit.

III - OPERATING PRINCIPLE

The solenoid valve is controlled by an opening cyclic ratio signal issued by the injection computer. The opening cyclic ratio signal modulates the opening of the solenoid valve, and consequently the quantity of exhaust gas directed back to the intake distributor.

Note:

The position of the exhaust gas recirculation solenoid valve is a determining factor in the calculation of the quantity of air admitted by the engine.

IV - OPERATING CONDITIONS

The following parameters determine activation of the exhaust gas recirculation solenoid valve:

- the coolant temperature,
- air temperature,
- atmospheric pressure,
- the position of the accelerator pedal,
- diesel injection flow,

B84 or C84 or E84 or K84 or L84, and M9R

- the engine speed.

B84 or C84 or G84 or S84, and K9K, and 722 or 728 or 729

Essential special tooling	
Mot. 1729	Pin wrench for removing the EGR valve.

Tightening torques ▽	
exhaust gas recirculation solenoid valve mounting bolts	**12 Nm**
exhaust gas recirculation solenoid valve mounting stud (if replacing)	**4 Nm**

The exhaust gas recirculation solenoid valve is fitted into the exhaust gas recirculation unit.

REMOVAL

❑ Disconnect:

- the battery, starting with the negative terminal,
- the exhaust gas recirculation solenoid valve.

❑ Remove the turbocharger outlet pipe.

❑ Move aside the turbocharger outlet pipe.

❑ Remove:

- the heat shield,
- the bolts securing the exhaust gas recirculation solenoid valve,
- the exhaust gas rebreathing solenoid valve by unscrewing it gradually,
- the exhaust gas recirculation solenoid valve by gradually turning it using the **(Mot. 1729)**.

REFITTING

❑

> **WARNING**
> Always replace the exhaust gas recirculation solenoid valve gasket with a new one

❑ Proceed in the reverse order to removal.

❑ Torque tighten:

- the **exhaust gas recirculation solenoid valve mounting bolts (12 Nm)**,
- the **exhaust gas recirculation solenoid valve mounting stud (if replacing) (4 Nm)**.

B84 or C84 or G84 or S84, and F9Q, and 800

Essential special tooling	
Mot. 1729	Pin wrench for removing the EGR valve.

Tightening torques ▽	
exhaust gas recirculation solenoid valve mounting bolts	**12 Nm**

The exhaust gas recirculation solenoid valve is fitted into the exhaust gas recirculation unit.

REMOVAL

❑ Disconnect the engine damper flap air pipe.

❑ Remove:

- the engine damper flap,
- the bolts securing the exhaust gas recirculation solenoid valve,
- the exhaust gas recirculation solenoid valve by gradually turning it using the **(Mot. 1729)**.

REFITTING

❑

> **WARNING**
> Always replace the exhaust gas recirculation solenoid valve gasket with a new one

❑ Proceed in the reverse order to removal.

❑ Tighten to torque the **exhaust gas recirculation solenoid valve mounting bolts (12 Nm)**.

B84 or C84 or G84 or S84, and F9Q, and 803 or 804 or 816 or 818

Tightening torques ▽	
exhaust gas recirculation unit bolts	**25 Nm**
exhaust gas recirculation pipe bolts	**18 Nm**

REMOVAL

I - REMOVAL PREPARATION OPERATION

❑ Remove:

- the battery (see **Battery : Removal - Refitting**) (MR 364, 80A, Battery),
- the inlet duct (see **12A**, **Fuel mixture**, **Air inlet duct: Removal - Refitting**, page **12A-46**) .

II - OPERATION FOR REMOVAL OF PART CONCERNED

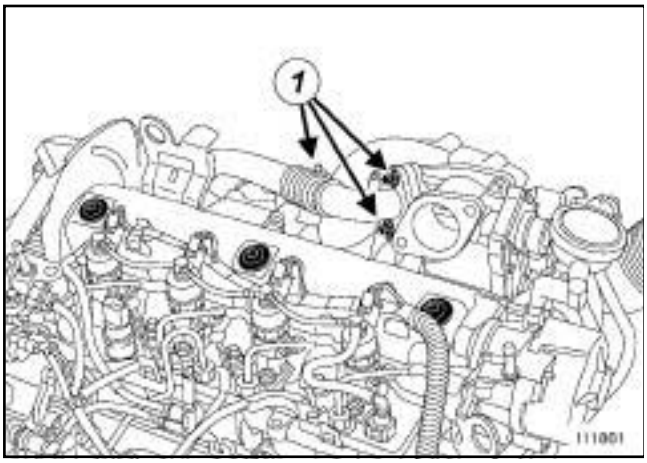

111861

❑ Remove the bolts (**1**) from the exhaust gas recirculation pipe.

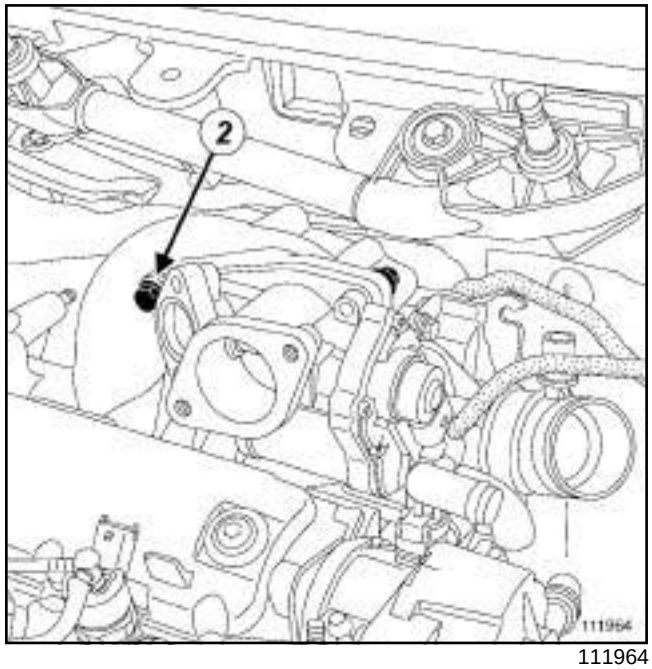

111964

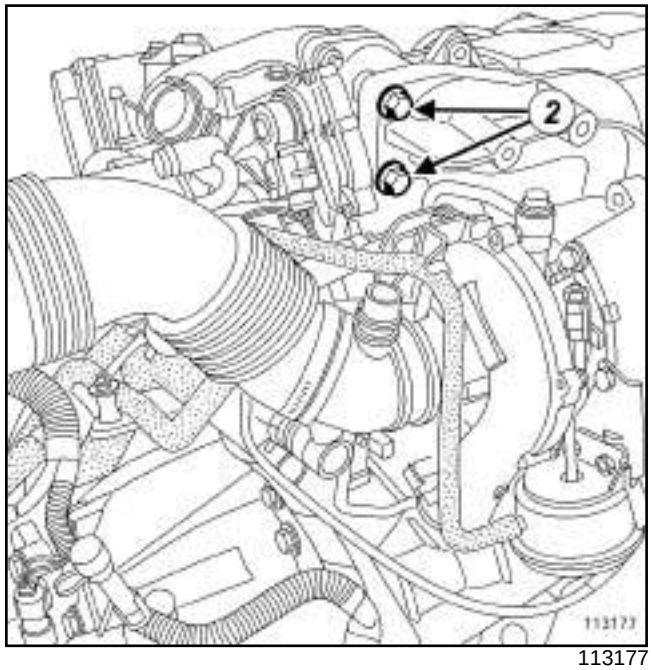

113177

❑ Remove:

- the bolts (**2**) from the EGR unit,
- the EGR unit.

Note:

Never remove the exhaust gas recirculation solenoid valve from the exhaust gas recirculation unit.

B84 or C84 or G84 or S84, and F9Q, and 803 or 804 or 816 or 818

REFITTING

I - REFITTING PREPARATIONS OPERATION

❑ It is essential to replace the exhaust gas recirculation unit seals.

II - REFITTING OPERATION FOR PART CONCERNED

❑ Refit:

- the EGR unit,
- the exhaust gas recirculation unit bolts.

❑ Torque tighten the **exhaust gas recirculation unit bolts (25 Nm)**.

❑ Refit the exhaust gas recirculation pipe bolts.

❑ Torque tighten the **exhaust gas recirculation pipe bolts (18 Nm)**.

III - FINAL OPERATION.

❑ Refit:

- the intake duct (see **12A**, **Fuel mixture**, **Air inlet duct: Removal - Refitting**, page **12A-46**) ,
- the battery (see **Battery : Removal - Refitting**) (MR 364, 80A, Battery).

B84 or C84 or G84 or S84, and K9K, and 724 or 732 or 734

Essential special tooling	
Mot. 1729	Pin wrench for removing the EGR valve.

Essential equipment
diagnostic tool

Tightening torques ▽	
exhaust gas recirculation solenoid valve bolts	**10 N.m**

REMOVAL

I - REMOVAL PREPARATION OPERATION

❏ Remove the engine covers

❏ Disconnect the battery (see **Battery: Removal - Refitting**) (80A, Battery).

K9K, and 732 or 734

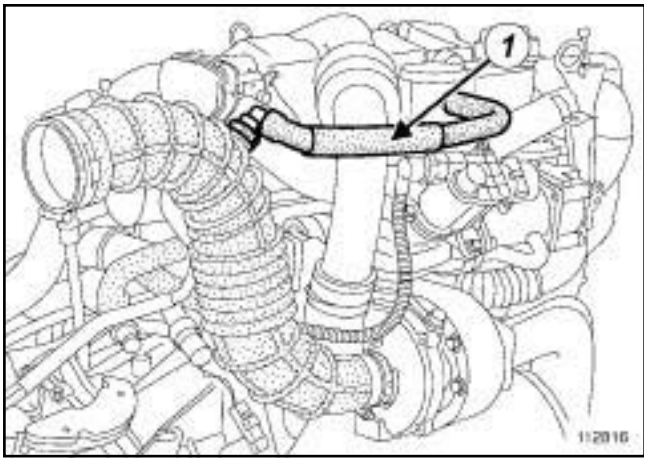

112816

❏ Remove the oil vapour rebreathing pipe (**1**) .

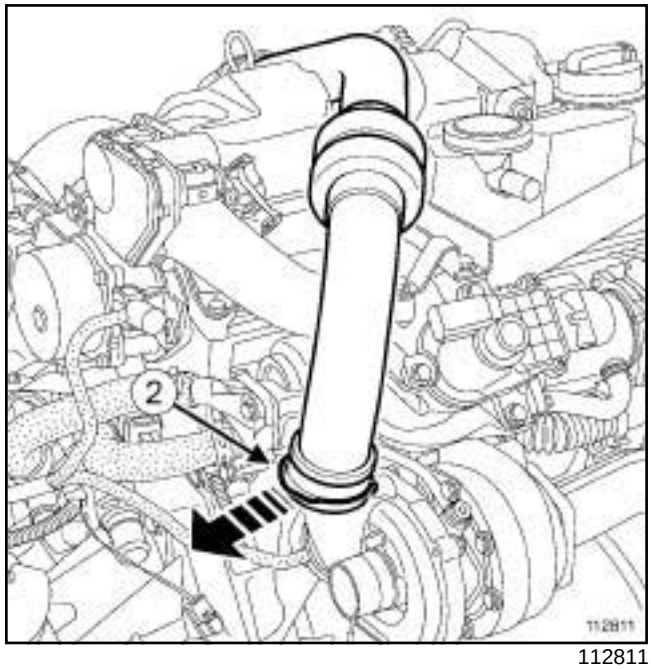

112811

❏ Pull out clip (**2**) .

❏ Remove the bolt for the air-air intercooler air inlet pipe.

❏ Remove the intercooler inlet air pipe.

B84 or C84 or G84 or S84, and K9K, and 724 or 732 or 734

II - OPERATION FOR REMOVAL OF PART CONCERNED

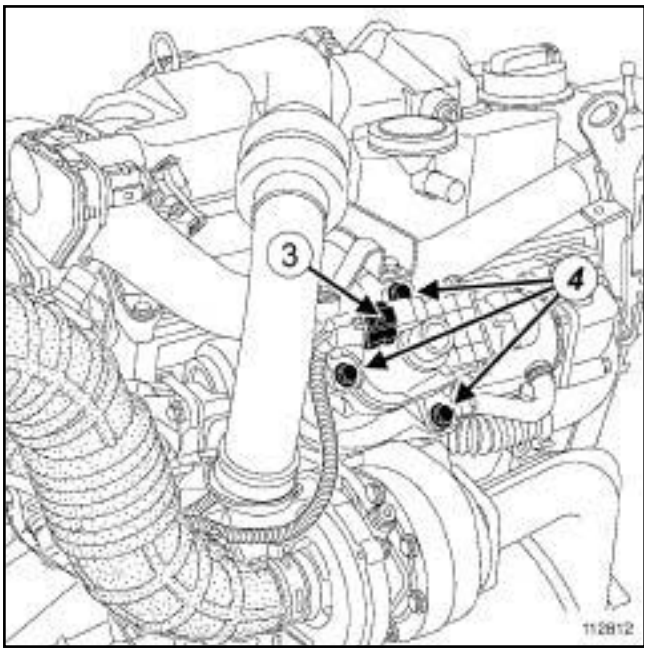

112812

❑ Disconnect the connector (**3**) from the exhaust gas recirculation solenoid valve.

❑ Remove:

- the bolts (**4**) from the exhaust gas recirculation solenoid valve,
- the exhaust gas recirculation solenoid valve using the **(Mot. 1729)**,
- the seal between the exhaust gas recirculation solenoid valve and the cooler mounting on the flywheel side.

> Note:
>
> When removing the exhaust gas recirculation solenoid valve with the **(Mot. 1729)**, gently move the solenoid valve until it comes away from its mounting.

REFITTING

I - REFITTING PREPARATION OPERATION

❑ **parts always to be replaced: exhaust gas recirculation solenoid valve seal (11,07,01,13)**

II - REFITTING OPERATION FOR PART CONCERNED

❑ Refit the exhaust gas recirculation solenoid valve with its new seal.

❑ Torque tighten the **exhaust gas recirculation solenoid valve bolts (10 N.m)**.

III - FINAL OPERATION

❑ Refit:

- the clip on the intercooler air inlet pipe,
- the intercooler air inlet pipe,
- the bolt on the intercooler inlet air pipe.

K9K, and 732 or 734

❑ Refit the oil vapour rebreathing pipe.

❑ Connect the battery (see **Battery : Removal - Refitting**) (80A, Battery).

❑ Refit the engine covers.

❑ Before restarting the engine, use the **diagnostic tool** to clear any faults stored by the injection computer.

B84 or C84 or E84 or K84 or L84, and M9R

Essential equipment
tweezers

Tightening torques ▽	
bolts mounting the EGR duct on the EGR solenoid valve	**25 Nm**
bolts mounting the EGR duct on the EGR cooler	**25 Nm**
bolts mounting the EGR solenoid valve on the intake distributor	**21 Nm**
intercooler air inlet pipe bolts	**8 Nm**
front end panel upper bolts	**21 Nm**
front end panel lower bolts	**44 Nm**

REMOVAL

I - REMOVAL PREPARATION OPERATION

❑ Position the vehicle on a two-post lift (see **Vehicle: Towing and lifting**) (MR 364, 02A, Lifting equipment).

❑ Disconnect the battery (see **Battery: Removal - Refitting**) (MR 364, 80A, Battery).

❑ Remove:

- the engine covers,
- the engine undertray bolts,
- the engine undertray,
- the front bumper (see **Front bumper: Removal - Refitting**) (MR 365, 55A Exterior protection).

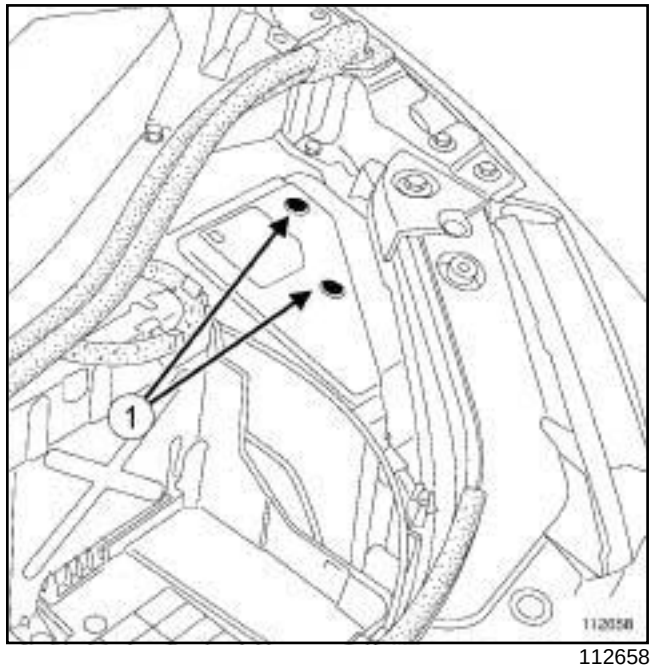

112658

❑ Remove:

- the engine accessories unit cover bolts (**1**) ,
- the engine accessories unit cover.

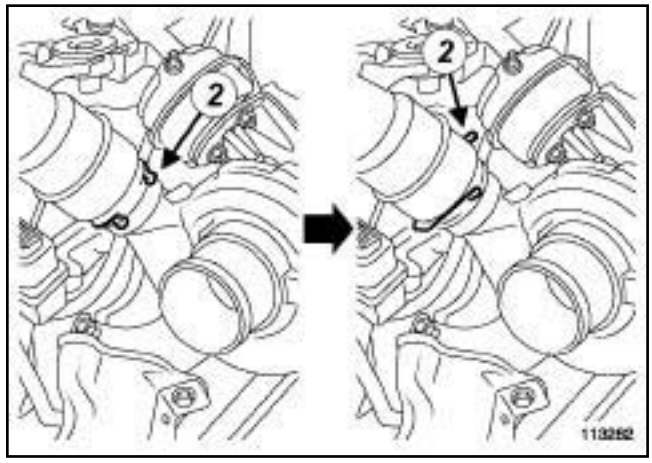

113282

❑ Rotate the intercooler air inlet pipe clip (**2**) .

B84 or C84 or E84 or K84 or L84, and M9R

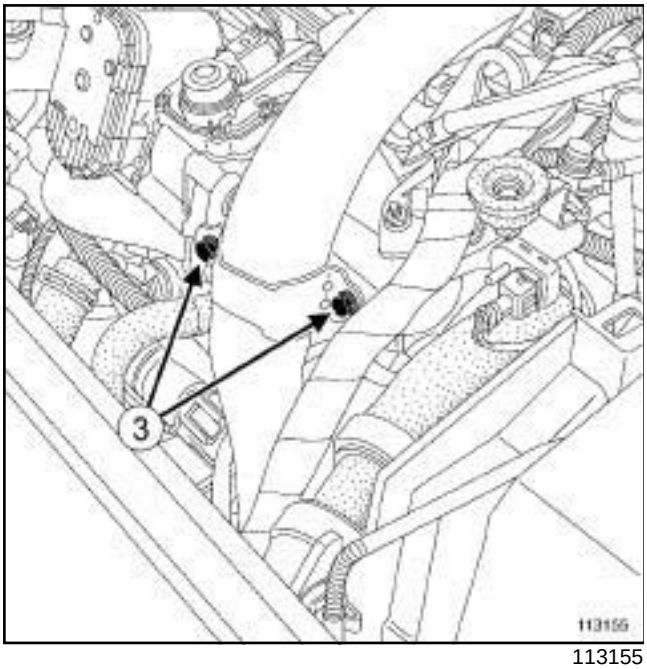

113155

- ❑ Remove the bolts (**3**) from the intercooler inlet air pipe on the intake distributor.
- ❑ Move the intercooler air inlet pipe to one side.

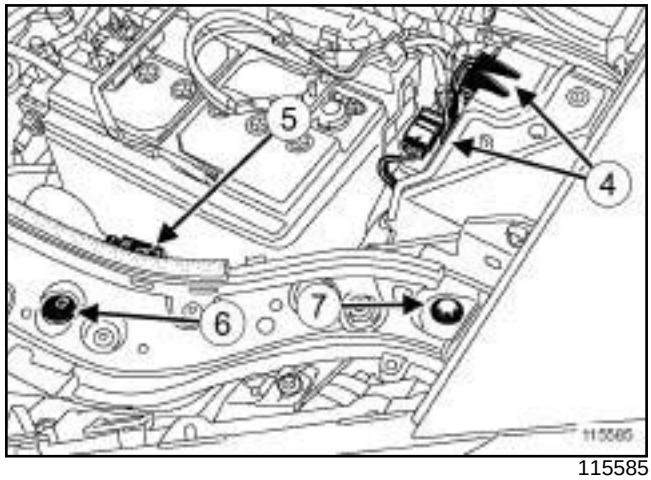

115585

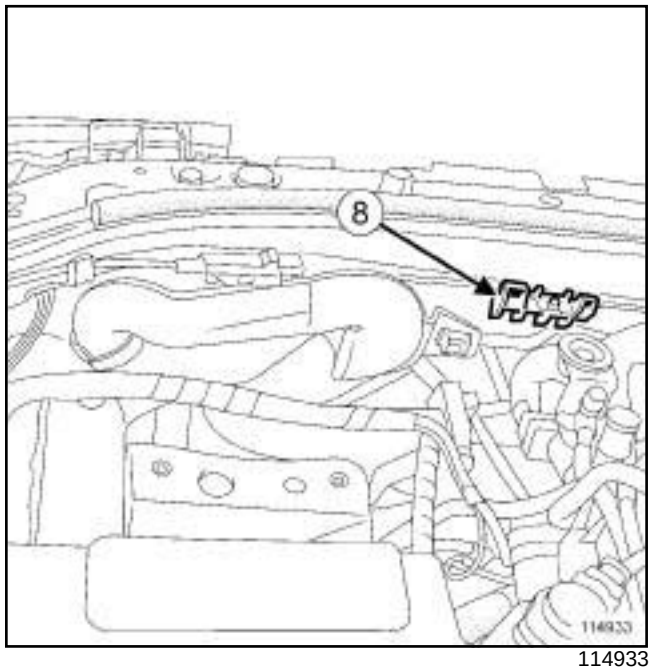

114933

- ❑ Disconnect the connectors (**4**) from the engine accessories unit.
- ❑ Unclip the bonnet opening cable (**5**) .
- ❑ Remove:

  - the front end panel clips (**6**) ,

  - the front end panel upper bolts (**7**) .
- ❑ Disconnect the screen washer pipes.
- ❑ Unclip the air inlet (**8**) .

B84 or C84 or E84 or K84 or L84, and M9R

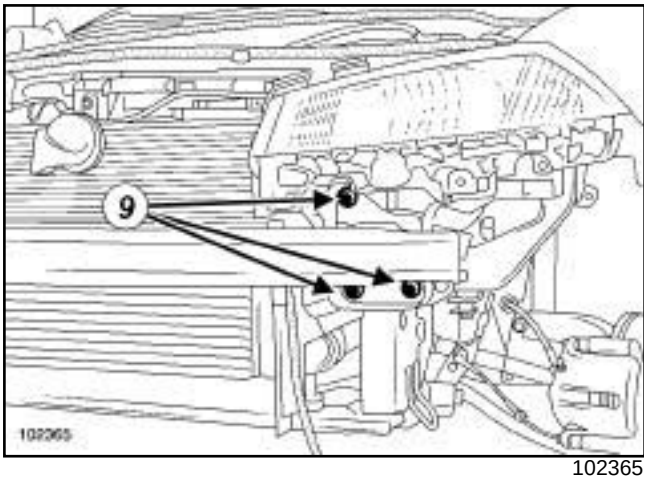

102365

❑ Remove:

- the front end panel lower bolts (**9**) ,
- the front end panel,
- the damper valve (see **12A**, **Fuel mixture**, **Air inlet flap: Removal - Refitting**, page **12A-33**) .

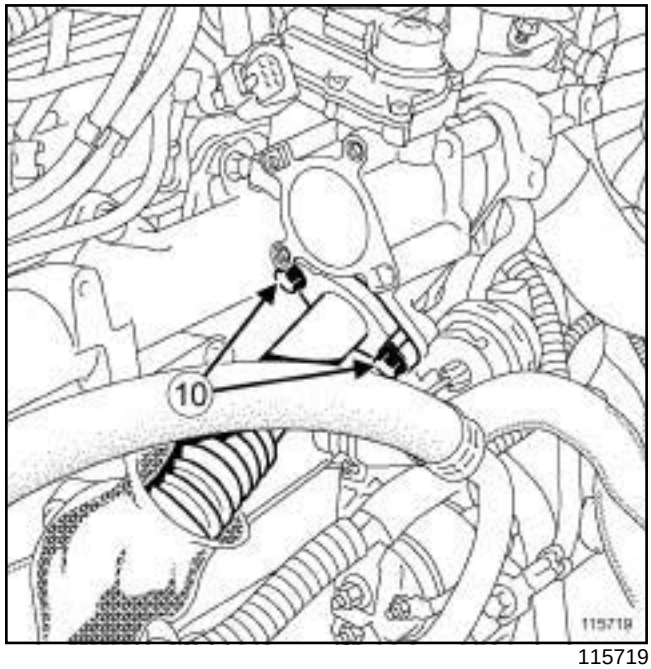

115719

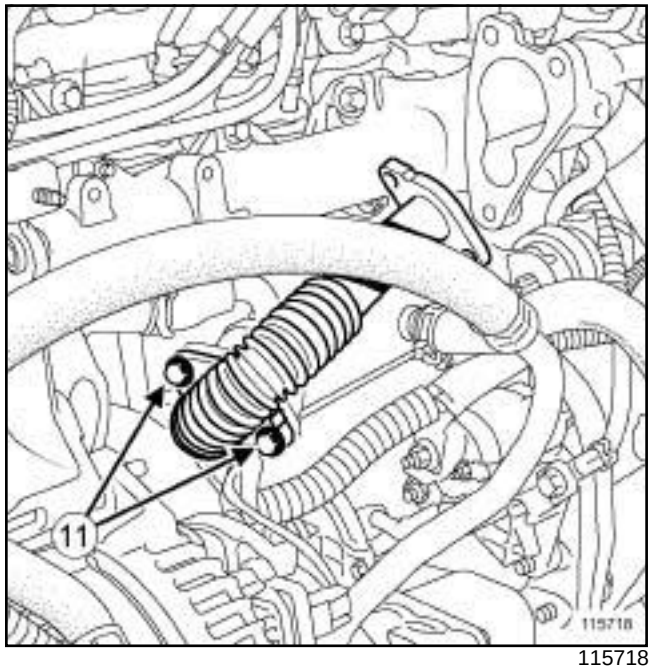

115718

❑ Remove:

- the bolts (**10**) mounting the EGR duct on the EGR solenoid valve,
- the bolts (**11**) mounting the EGR duct on the EGR cooler.

B84 or C84 or E84 or K84 or L84, and M9R

II - OPERATION FOR REMOVAL OF PART CONCERNED

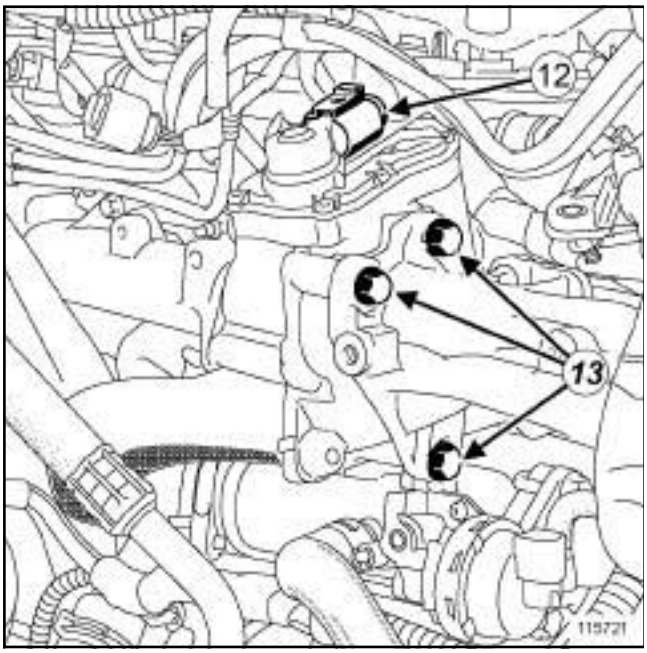

115721

❑ Disconnect the connector (**12**) from the EGR solenoid valve.

❑ Remove:

- the bolts (**13**) mounting the EGR solenoid valve on the intake distributor,
- the EGR solenoid valve,
- the seal between the EGR solenoid valve and the air intake distributor.

REFITTING

I - REMOVAL PREPARATION OPERATION

❑ Replace:

- the seals at the ends of the EGR duct,
- the seal between the EGR solenoid valve and the air intake distributor,
- the seal between the exhaust gas recirculation solenoid valve and the damper valve,

❑ Clean the joint faces.

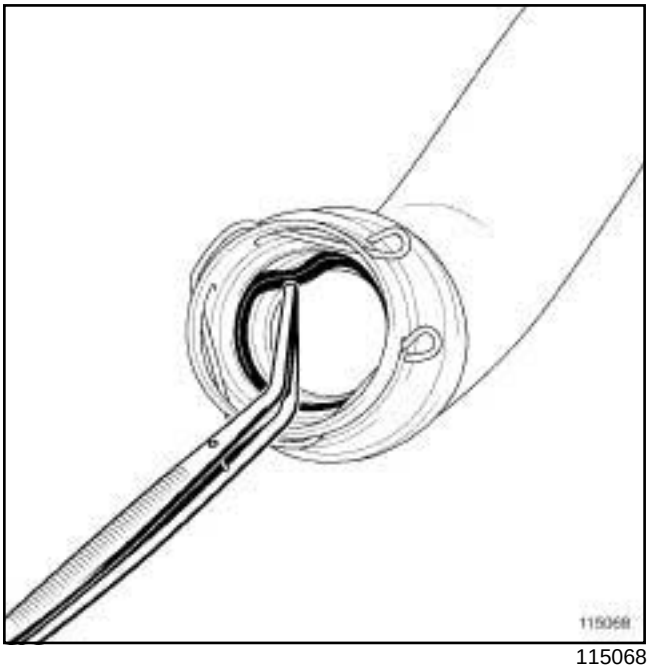

115068

❑ Remove the intercooler air inlet pipe seal using a **tweezers**.

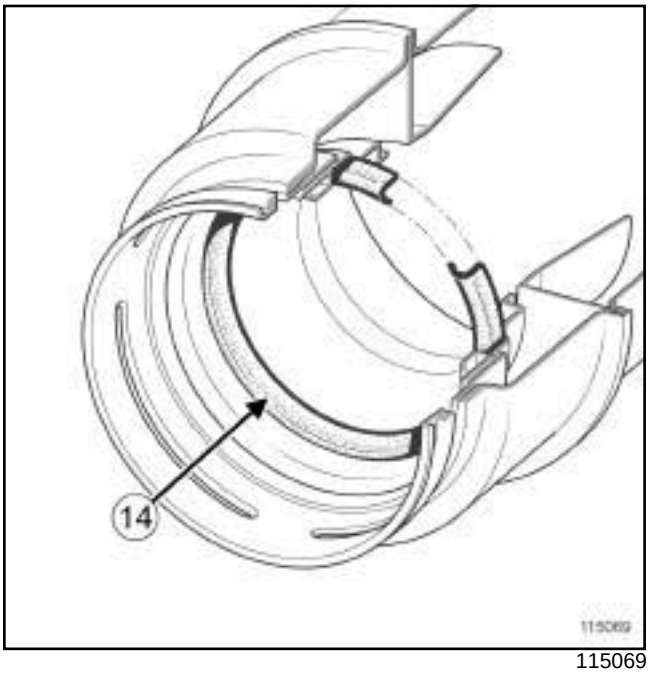

115069

❑ Refit the new intercooler air inlet pipe seal.

Note:

Check that the seal (**14**) on the intercooler air inlet pipe is fitted the correct way round.

B84 or C84 or E84 or K84 or L84, and M9R

II - REFITTING OPERATION FOR PART CONCERNED

❏ Refit the EGR solenoid valve.

❏ Screw on the EGR solenoid valve bolts, without tightening them.

❏ Refit the EGR duct.

❏ Without tightening, fit:

- the EGR duct bolts on the EGR solenoid valve,
- the EGR duct bolts on the EGR cooler.

❏ Torque tighten and in order:

- the **bolts mounting the EGR duct on the EGR solenoid valve (25 Nm)**,
- the **bolts mounting the EGR duct on the EGR cooler (25 Nm)**,
- the **bolts mounting the EGR solenoid valve on the intake distributor (21 Nm)**.

III - FINAL OPERATION.

❏ Rotate the intercooler air inlet pipe clip.

❏ Refit the intercooler air inlet pipe bolts.

❏ Torque tighten the **intercooler air inlet pipe bolts (8 Nm)**.

❏ Refit:

- the damper valve (see **12A**, **Fuel mixture**, **Air inlet flap: Removal - Refitting**, page **12A-33**) ,
- the front end panel,
- the front end panel upper bolts,
- the front end panel lower bolts,
- the front end panel clips.

❏ Torque tighten:

- the **front end panel upper bolts (21 Nm)**,
- the **front end panel lower bolts (44 Nm)**.

❏ Connect the engine accessories unit connectors.

❏ Clip on the air inlet.

❏ Connect the screen washer pipes.

❏ Clip the bonnet opening cable.

❏ Refit:

- the engine accessories unit cover,
- the engine accessories unit cover bolts,
- the front bumper (see **Front bumper: Removal - Refitting**) (MR 365, 55A, Exterior protection),
- the engine undertray,
- the engine undertray bolts.

❏ Connect the battery (see **Battery : Removal - Refitting**) (MR 364, 80A, Battery).

❏ Reinitialise the programming by following command scenario **SC036** if replacing, removing or refitting the exhaust gas recirculation solenoid valve (see **Fault finding - Interpretation of commands**) (MR 366, 13B, Diesel injection) and (see **Fault finding - Replacement of components**) (MR 366, 13B, Diesel injection).

❏ Refit the engine covers.

B84 or C84 or G84 or S84, and F9Q, and 808

- The exhaust gas recirculation solenoid valve is joined to the exhaust gas recirculation unit.
- Replace the « exhaust gas recirculation unit - exhaust gas recirculation solenoid valve » assembly in the event of fault with the exhaust gas recirculation solenoid valve (see **14A**, **Antipollution**, **Exhaust gas recirculation unit: Removal - Refitting**, page **14A-35**) .

Exhaust gas recirculation unit: Removal - Refitting

B84 or C84 or G84 or S84, and K9K, and 722

Essential special tooling	
Mot. 1567	Long nose pliers for EGR duct clips.

Tightening torques ▽	
exhaust gas recirculation unit mounting bolts	**21 Nm**
lifting eye (timing end)	**21 Nm**
exhaust gas recirculation solenoid valve heat shield mounting bolts	**12 Nm**
engine cover mounting bolts	**4 Nm**

REMOVAL

❑ Remove the engine covers.

❑ Disconnect the battery (see **Battery: Removal - Refitting**) (MR 364, 80A, Battery).

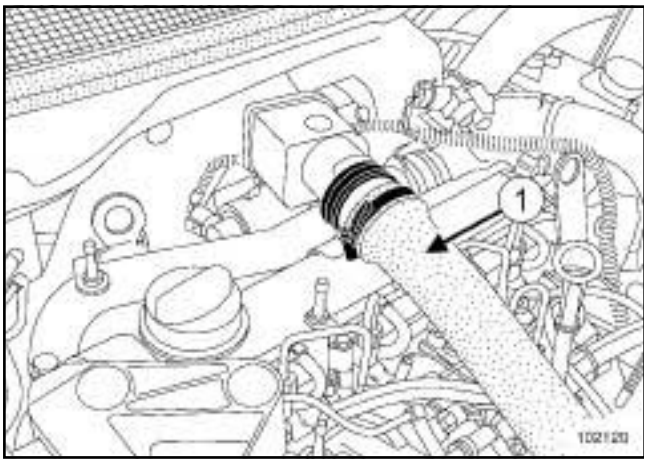

102120

❑ Remove the air tract (**1**) .

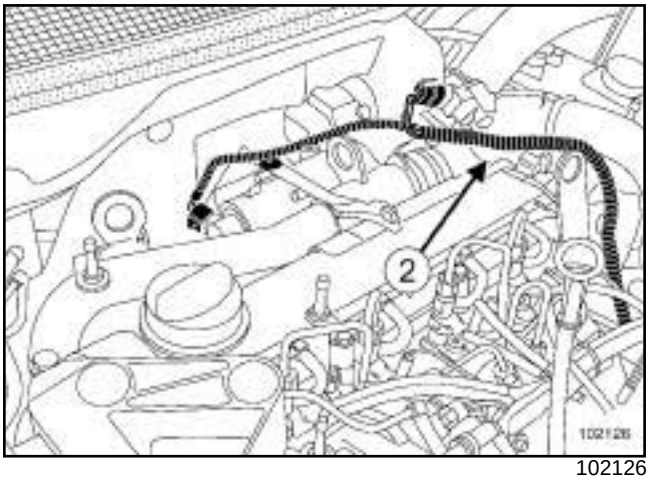

102126

❑ Disconnect the wiring harness (**2**) .

❑ Move the wiring harness to one side.

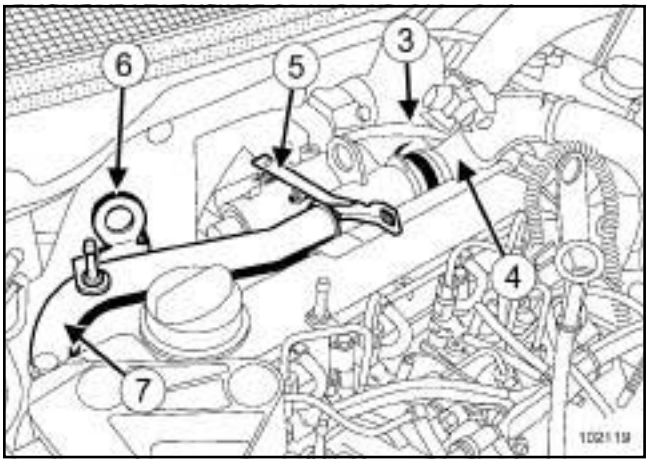

102119

❑ Disconnect:

- the turbocharging pressure regulation valve pipe (**3**) from the air duct,
- the exhaust gas recirculation unit air inlet pipe (**4**) .

❑ Remove:

- bracket (**5**) ,
- engine lifting eye (**6**) ,
- the air inlet metal tube (**7**) .

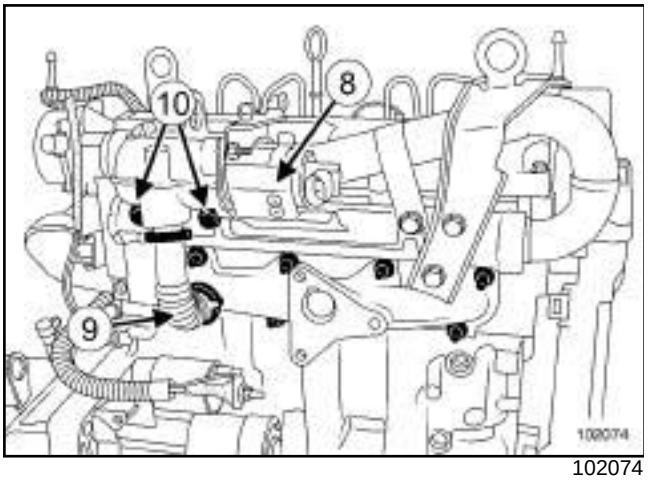

102074

- Remove:
  - the exhaust gas recirculation solenoid valve heat shield (**8**) ,
  - the exhaust gas recirculation pipe (**9**) ,
  - the two exhaust gas recirculation unit mounting bolts (**10**) ,
  - the EGR unit.

REFITTING

- Replace the exhaust gas recirculation tube complete with new clips.
- Fit the exhaust gas recirculation unit onto the cylinder head.
- Tighten the mounting bolts by hand.
- Torque tighten the **exhaust gas recirculation unit mounting bolts (21 Nm)**.
- Fit the exhaust gas recirculation pipe.
- Tighten the new clips using the **(Mot. 1567)**.
- Replace the O-rings on the air inlet metal tube.
- Torque tighten:
  - the **lifting eye (timing end) (21 Nm)**,
  - the **exhaust gas recirculation solenoid valve heat shield mounting bolts (12 Nm)**.
- Proceed in the reverse order to removal.
- Connect the battery (see **Battery : Removal - Refitting**) (MR 364, 80A, Battery).
- Torque tighten the **engine cover mounting bolts (4 Nm)**.

Exhaust gas recirculation unit: Removal - Refitting

B84 or C84 or G84 or S84, and K9K, and 728 or 729

Essential special tooling	
Mot. 1567	Long nose pliers for EGR duct clips.

Tightening torques ▽	
exhaust gas recirculation unit mounting bolts	**21 Nm**
inlet air metal tube mounting bolts	**21 Nm**
lifting eye (timing end)	**21 Nm**
exhaust gas recirculation solenoid valve heat shield mounting bolts	**12 Nm**
engine cover mounting bolts	**4 Nm**

REMOVAL

❑ Disconnect the battery (see **Battery: Removal - Refitting**) (MR 364, 80A, Battery).

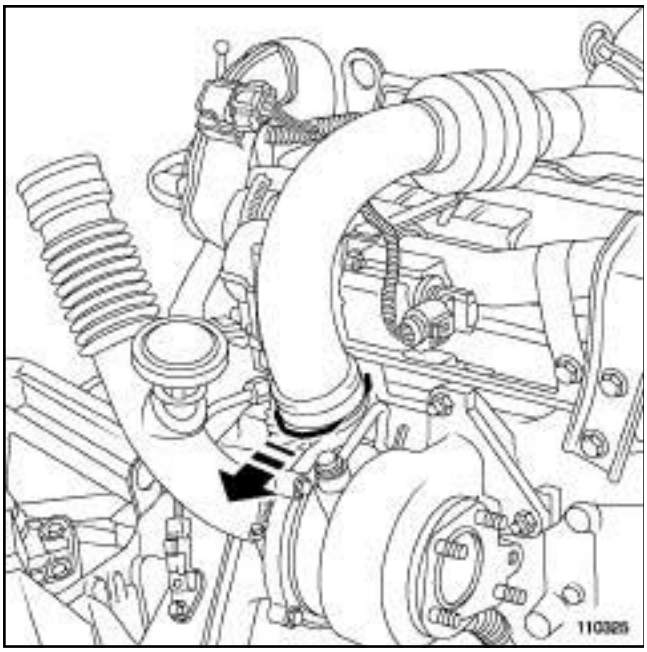

110325

❑ Pull the clip.

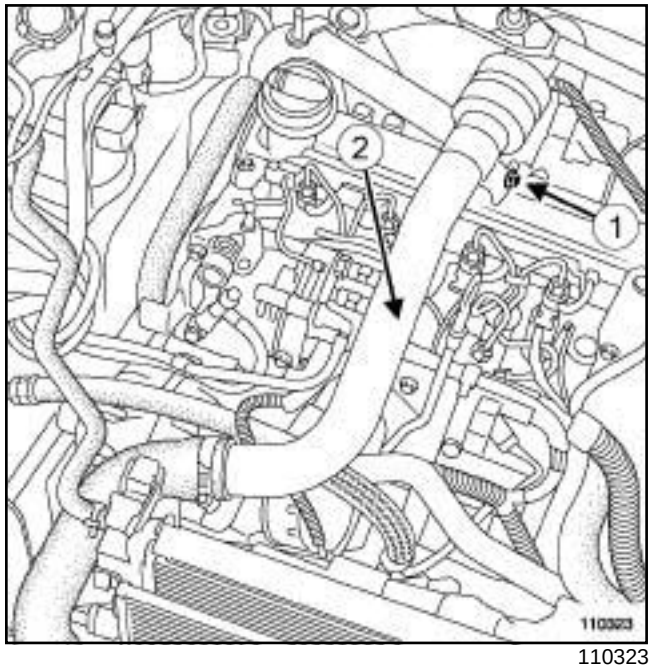

110323

❑ Undo bolt (**1**) .

❑ Remove the air duct (**2**) .

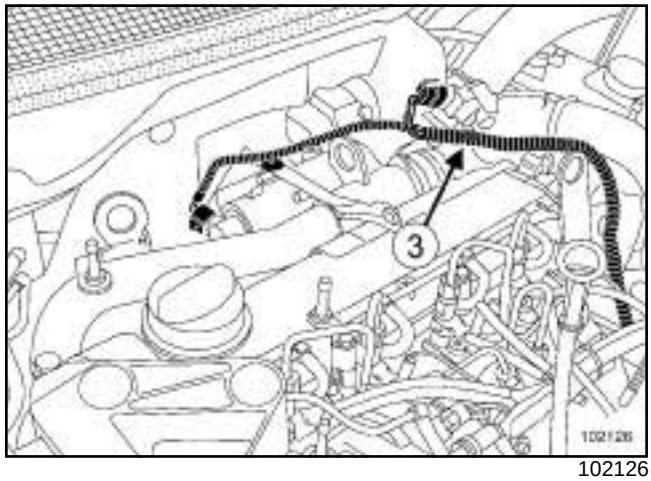

102126

❑ Disconnect the wiring harness (**3**) .

❑ Move the wiring harness to one side.

B84 or C84 or G84 or S84, and K9K, and 728 or 729

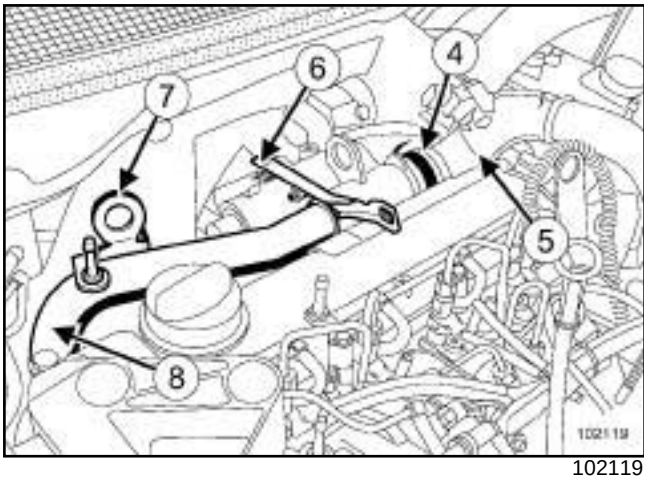

102119

❑ Disconnect:

- the turbocharging pressure regulation valve pipe (**4**) from the air duct,
- the exhaust gas recirculation unit air inlet pipe (**5**) .

❑ Remove:

- the bracket (**6**) ,
- the engine lifting eye (**7**) ,
- the air inlet metal tube (**8**) .

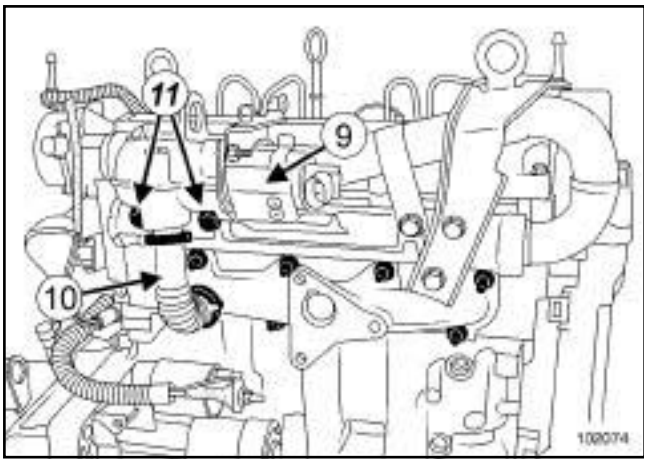

102074

❑ Remove:

- the exhaust gas recirculation solenoid valve heat shield (**9**) ,
- the exhaust gas recirculation pipe (**10**) ,
- the two exhaust gas recirculation unit mounting bolts (**11**) ,
- the EGR unit.

REFITTING

❑ Replace the exhaust gas recirculation tube complete with new clips.

❑ Fit the exhaust gas recirculation unit onto the cylinder head.

❑ Tighten the mounting bolts by hand.

❑ Torque tighten the **exhaust gas recirculation unit mounting bolts (21 Nm)**.

❑ Fit the exhaust gas recirculation pipe.

❑ Tighten the new clips using the **(Mot. 1567)**.

❑ Replace the O-rings on the air inlet metal tube.

❑ Torque tighten:

- the **inlet air metal tube mounting bolts (21 Nm)**,
- the **lifting eye (timing end) (21 Nm)**,
- the **exhaust gas recirculation solenoid valve heat shield mounting bolts (12 Nm)**.

❑ Proceed in the reverse order to removal.

❑ Connect the battery (see **Battery : Removal - Refitting**) (MR 364, 80A, Battery).

❑ Torque tighten the **engine cover mounting bolts (4 Nm)**.

B84 or C84 or G84 or S84, and F9Q, and 808

Tightening torques ▽	
exhaust gas recirculation exchanger mounting bolts	**10 Nm**
bleed valve mounting bolt	**9 Nm**
EGR mounting bolts	**20 Nm**
battery cover mounting bolts	**4 Nm**

REMOVAL

❏ Remove the engine covers.

❏ Disconnect the battery (see **Battery: Removal - Refitting**) (MR 364, 80A, Battery).

❏ Position the vehicle on a two-post lift.

❏ Remove the battery.

❏ Drain the cooling system through the cooling radiator bottom hose using theor the.

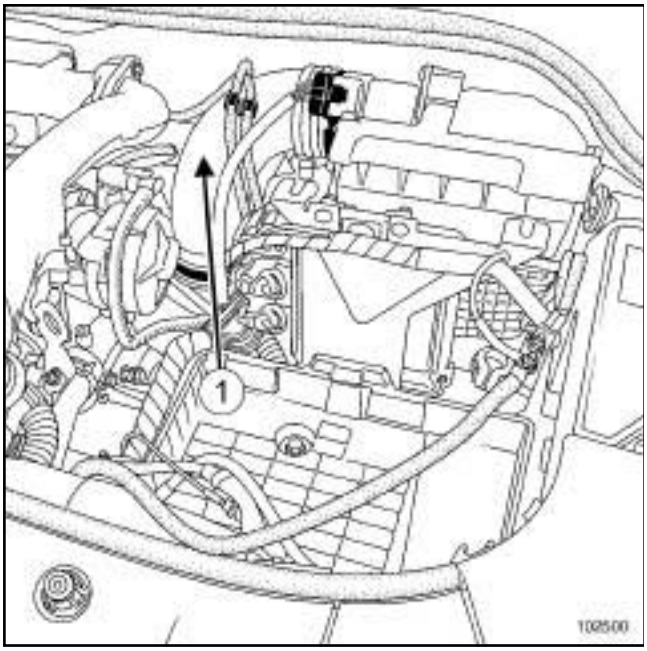

102500

❏ Remove the air filter outlet duct (**1**) .

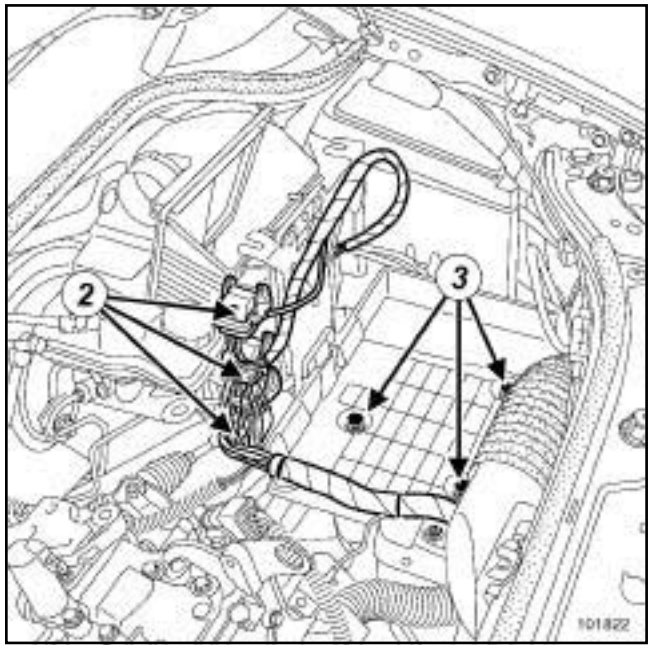

101822

❏ Disconnect the injection computer connectors (**2**) .

❏ Remove:

- the battery tray mounting bolts (**3**) ,
- the wiring harness strap.

❏ Unclip the wiring harnesses from the battery tray.

❏ Remove the battery tray.

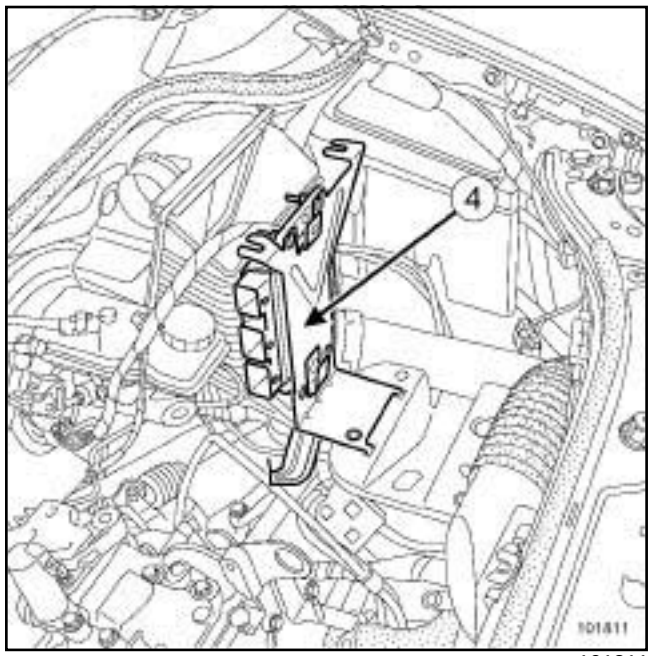

101811

❏ Remove the injection computer (**4**) and its support.

B84 or C84 or G84 or S84, and F9Q, and 808

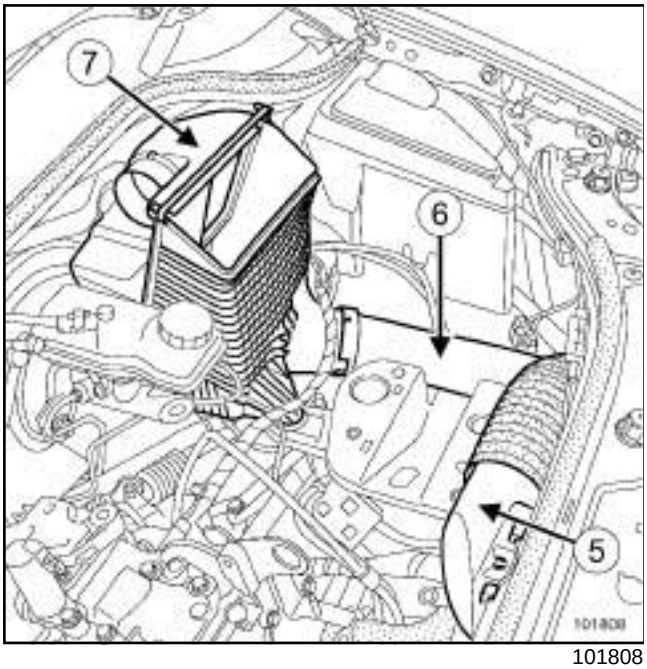

101808

❑ Remove:

- the air inlet sleeve (**5**) ,
- the air duct (**6**) ,
- the air filter unit (**7**) .

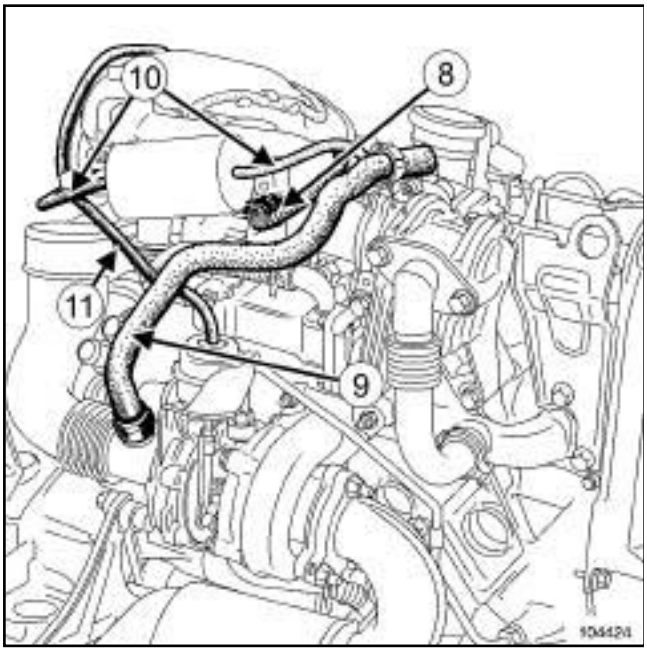

104424

❑ Disconnect:

- the exhaust gas recirculation connector (**8**) ,
- the oil vapour rebreathing pipe (**9**) ,
- the vacuum tank inlet and outlet pipes (**10**) ,
- the turbocharger pressure regulation valve (**10**) .

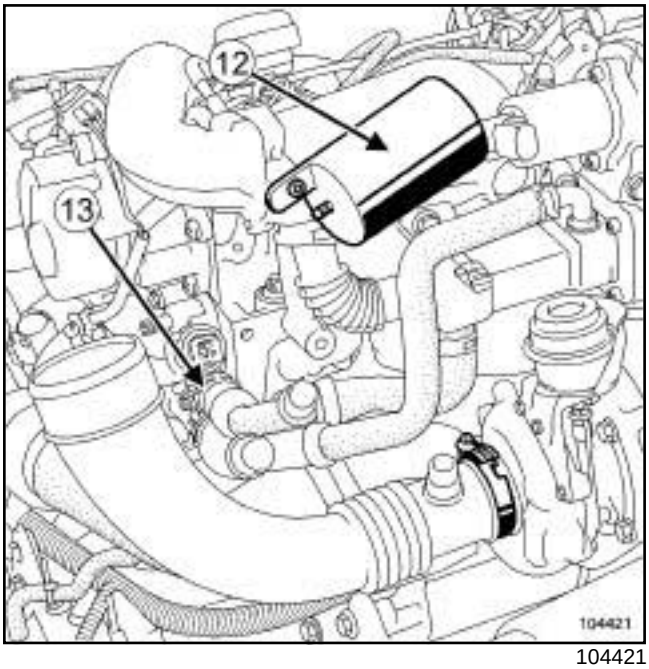

104421

❑ Remove the vacuum tank (**12**) .

❑ Disconnect the coolant tank hose (**13**) .

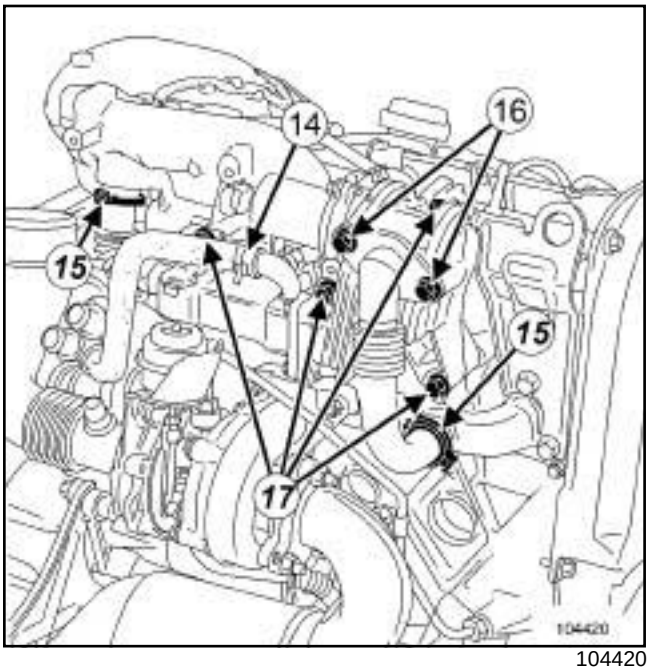

104420

❑ Disconnect the exhaust gas recirculation exchanger hose (**14**) .

❑ Remove:

- the clips (**15**) ,
- the EGR pipe mounting bolts (**16**) ,
- the mounting bolts (**17**) from the « EGR solenoid valve - intercooler » assembly,
- the « EGR solenoid valve - intercooler » assembly.

B84 or C84 or G84 or S84, and F9Q, and 808

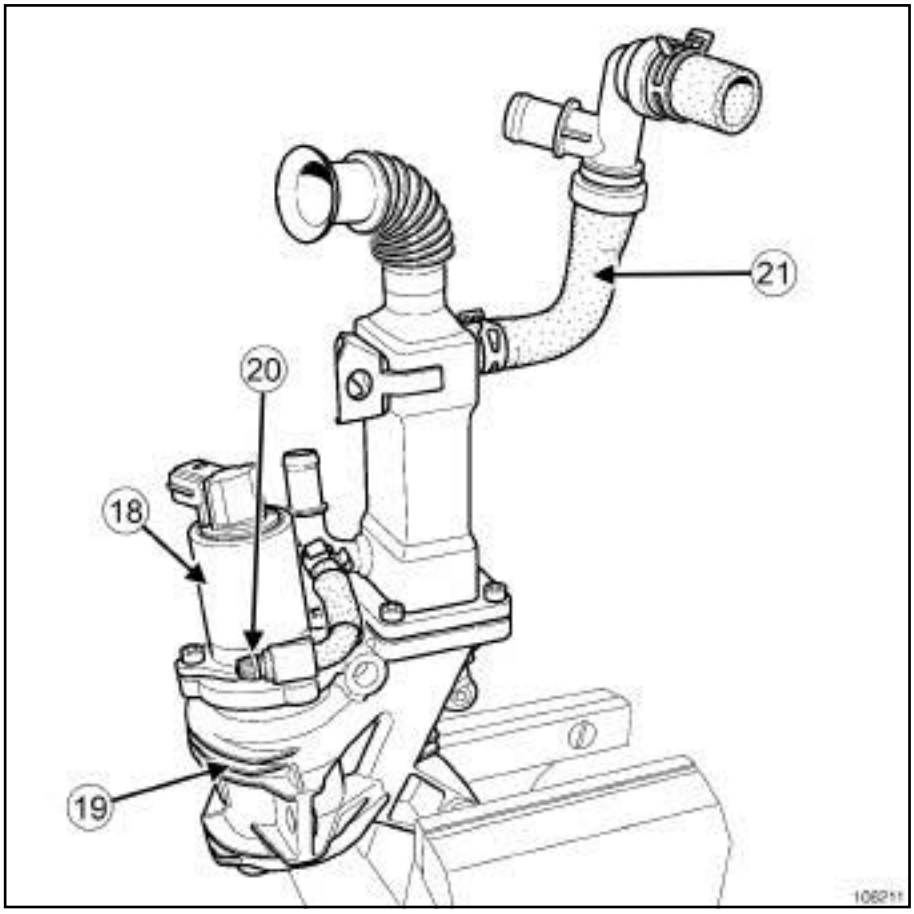

106211

❑

WARNING
Never remove the EGR solenoid valve (**18**) from the unit (**19**) .

I - ON THE WORKBENCH: REPLACE THE EXHAUST GAS RECIRCULATION SOLENOID VALVE.

❑ Remove:

- the bleed valve mounting bolt ***(20)*** ,
- the intercooler mounting bolts from the unit ***(19)*** .

❑ Replace the « EGR unit - EGR solenoid valve » assembly.

II - ON THE WORKBENCH: REPLACING THE INTERCOOLER.

❑ Remove:

- the hose ***(21)*** , mark its position for refitting,
- the bleed valve mounting bolt ***(20)*** ,
- the intercooler mounting bolts from the EGR unit ***(19)*** .

❑ Replace the intercooler.

WARNING
make sure that no foreign bodies enter the manifolds.

Always replace:

- the EGR pipe seals,
- clips ***(15)*** ,
- the seal between the exhaust gas recirculation exchanger and the EGR unit ***(19)*** .

REFITTING

❑ Proceed in the reverse order to removal.

❑ Torque tighten:

- the **exhaust gas recirculation exchanger mounting bolts (10 Nm)**,
- the **bleed valve mounting bolt (9 Nm)**,
- the **EGR mounting bolts (20 Nm)**.

B84 or C84 or G84 or S84, and F9Q, and 808

- If replacing the EGR solenoid valve, enter the new EGR solenoid valve operating values into the computer (see **Fault finding - Replacement of components)** (MR 366, 13B, Diesel injection).
- Connect the battery (see **Battery : Removal - Refitting**) (MR 364, 80A, Battery).
- Torque tighten the **battery cover mounting bolts (4 Nm)**.

K9K, and 732 or 734

Essential special tooling	
Ms. 583	Hose clamp pliers.
Mot. 1567	Long nose pliers for EGR duct clips.

Essential equipment
diagnostic tool

Tightening torques ▽	
bolts on the two exhaust gas cooler supports	**12 N.m**
exhaust gas cooler support bolts on the cylinder head	**25 N.m**
EGR rigid pipe bolts	**35 N.m**
coolant circulation cover bolts	**10 N.m**
lifting bracket bolts on the timing end	**10 N.m**

REMOVAL

I - REMOVAL PREPARATION OPERATION

❏ Position the vehicle on a two-post lift (see **Vehicle: Towing and lifting**) (02A, Lifting equipment).

❏ Remove:

- the engine covers,
- the engine undertray.

❏ Disconnect the battery (see **Battery: Removal - Refitting**) (80A, Battery).

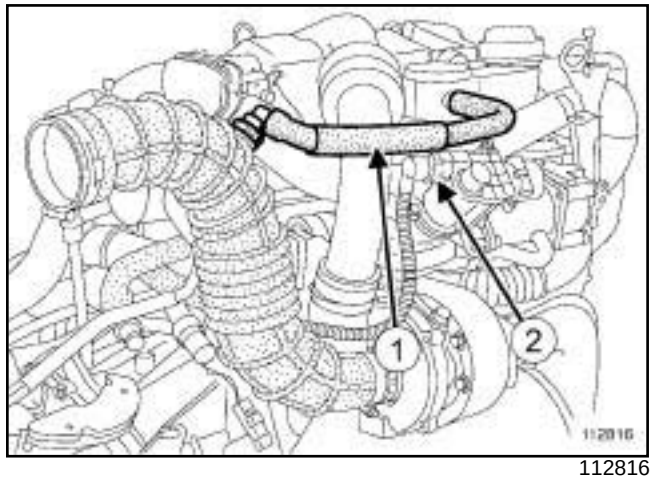

112816

❏ Remove the oil vapour rebreathing pipe (**1**) .

❏ Disconnect the oil vapour recirculation solenoid valve connector (**2**) .

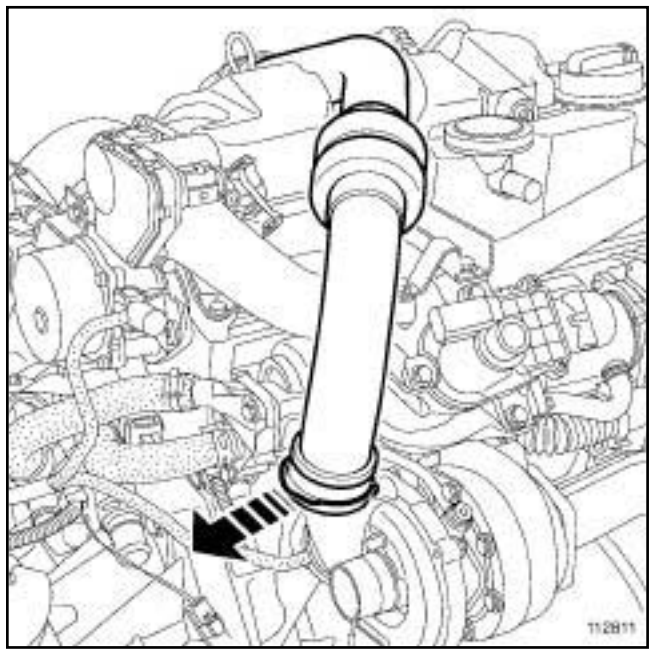

112811

❏ Pull the clip.

K9K, and 732 or 734

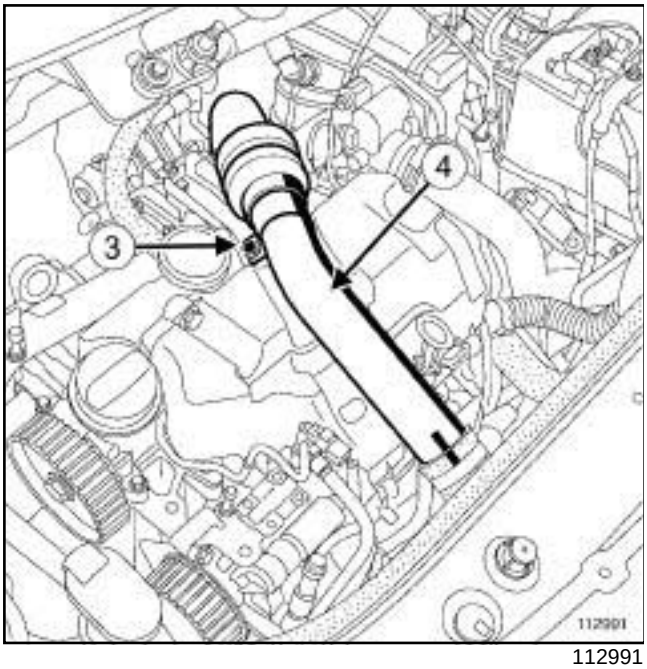

112991

- ❑ Remove the stainless steel pipe bolt (**3**) .
- ❑ Remove the air inlet duct (**4**) .

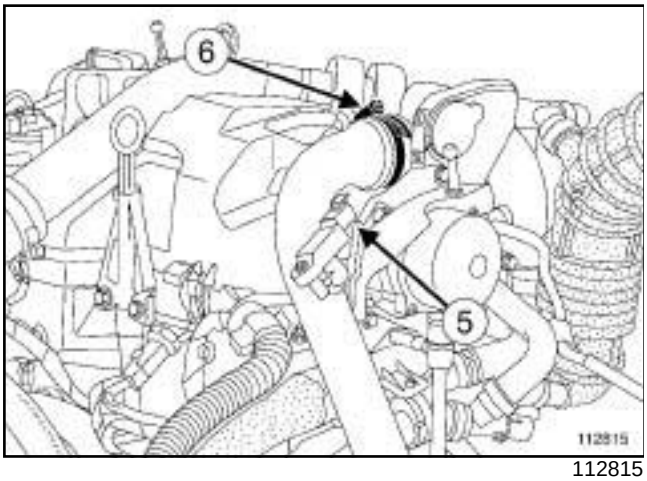

112815

- ❑ Disconnect the connector (**5**) from the inlet air pressure sensor.
- ❑ Loosen the clip (**6**) and move the air inlet manifold to one side.
- ❑ Remove the damper valve (see **12A**, **Fuel mixture**, **Air inlet flap: Removal - Refitting**, page **12A-33**) .

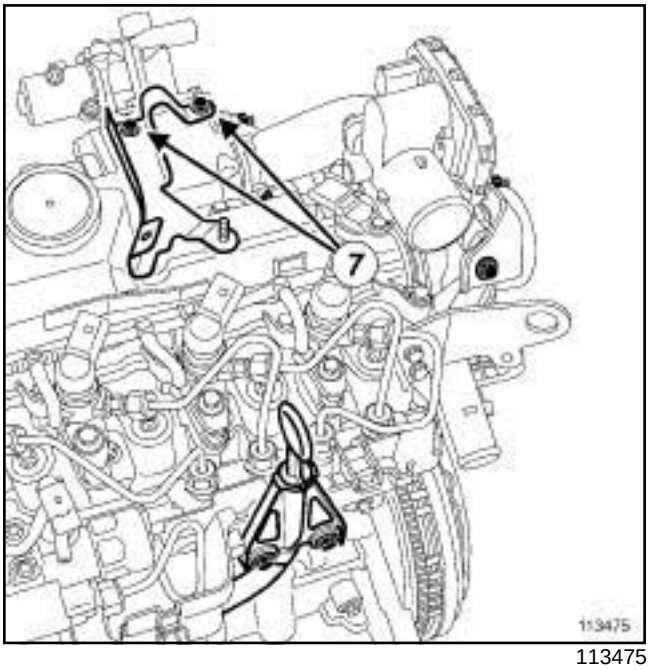

113475

- ❑ Remove the injector rail protector cover bracket bolts (**7**) .

K9K, and 732 or 734

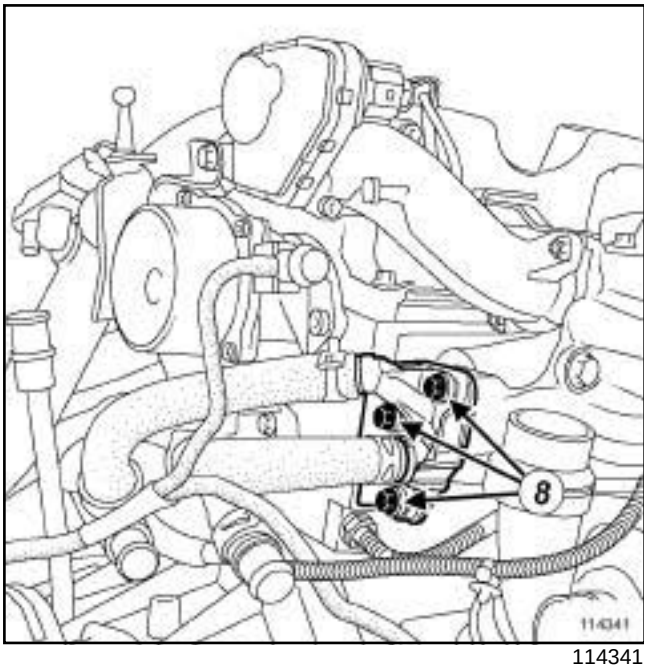

114341

❑ Position the tools **(Ms. 583)** on the coolant inlet and outlet pipes of the exhaust gas cooler.

❑ Remove the bolts (**8**) from the exhaust gas coolant circulation cover.

❑ Move the exhaust gas coolant circulation cover to one side.

❑ Remove the seals from the cover.

> **WARNING**
> Prepare for the flow of fluid, and protect the surrounding components.

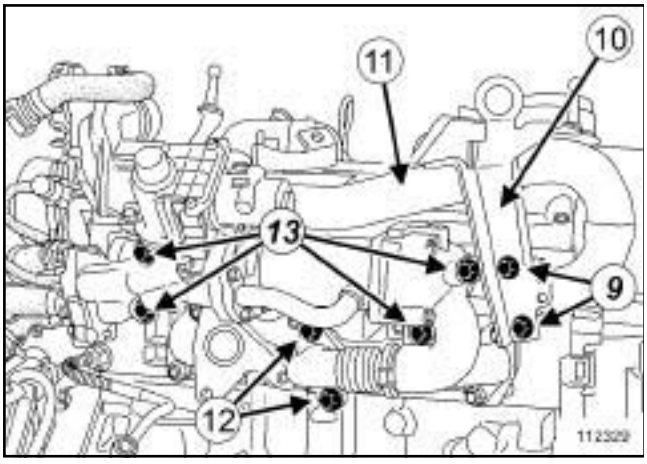

112329

❑ Remove:

- the lifting bracket bolts (**9**) on the timing end,
- the lifting bracket on the timing end (**10**) ,
- the air inlet metal tube (**11**) ,
- the catalytic converter (see **19B**, **Exhaust**, **Catalytic converter: Removal - Refitting**, page **19B-46**) ,
- the exhaust gas inlet pipe bolts (**12**) ,
- the bolts from the exhaust gas recirculation unit assembly (**13**) ,
- the exhaust gas recirculation unit assembly.

II - OPERATION FOR REMOVAL OF PART CONCERNED

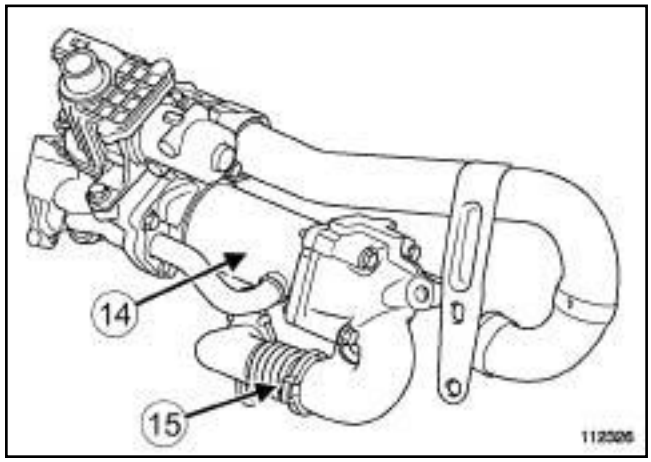

112326

❑ Using the workbench, remove:

- the bolts from the exhaust gas cooler on its two supports,
- the exhaust gas cooler (**14**) ,
- the exhaust gas inlet pipe snap-on clip (**15**) ,

REFITTING

I - REFITTING PREPARATION OPERATION

❑ All bearing surfaces on each removed part must be carefully cleaned.

> **WARNING**
> Take care not to damage the bearing faces to prevent any risk of coolant leaks.

❑ Always replace:

- the air inlet metal tube,
- the air inlet metal tube seals,
- **parts always to be replaced: exhaust gas cooler seal (11,07,01,17)**,
- **parts always to be replaced: Exhaust gas cooler cover seal (11,07,01,16)**,

K9K, and 732 or 734

- **parts always to be replaced: Exhaust gas recirculation rigid pipe (11,07,01,08)**,
- **parts always to be replaced: Exhaust gas recirculation pipe clip (11,07,01,14)**,
- **parts always to be replaced: exhaust gas recirculation pipe bolt (11,07,01,18)**.

II - REFITTING OPERATION FOR PART CONCERNED

❑ Refit the exhaust gas cooler on its two supports fitted with new seals.

> **WARNING**
> Ensure that the seals between the cooler and its two supports are correctly positioned to avoid any coolant leaks.

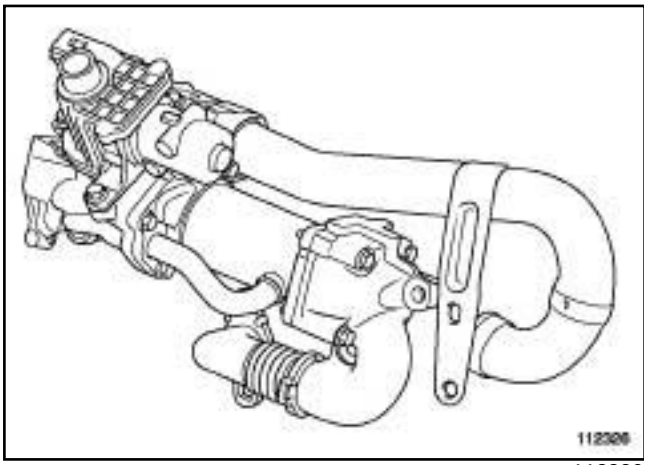

112326

❑ Refit:

- the cooler bolts, without making contact so that the cooler can move,
- the exhaust gas recirculation unit assembly with its cooler, onto the cylinder head.
- the bolts for the two exhaust gas cooler supports.

❑ Tighten the bolts of the two exhaust gas cooler supports on the cylinder head until they make contact.

❑ Adjust the exhaust gas cooler on its two supports so that it is immobilised.

❑ Tighten the bolts on the two exhaust gas cooler supports until contact is made, and the cooler is immobilised.

❑ Remove the exhaust gas recirculation unit and its cooler.

❑ On the workbench, torque tighten the **bolts on the two exhaust gas cooler supports (12 N.m)**.

> **WARNING**
> Ensure that the seals between the cooler and its two supports are correctly positioned to avoid any coolant leaks.

❑ Refit:

- the exhaust gas recirculation unit assembly with its cooler, onto the cylinder head.
- the exhaust gas cooler support bolts on the cylinder head.

❑ Torque tighten the **exhaust gas cooler support bolts on the cylinder head (25 N.m)**.

❑ Refit:

- a new exhaust gas recirculation rigid pipe with a new seal,
- the new bolts of the exhaust gas recirculation rigid pipe.

❑ Fit a new snap-fit clip.

> **WARNING**
> Ensure that you do not squeeze the exhaust gas inlet pipe before fitting the snap-fit clamp.

❑ Tighten the bolts of the rigid exhaust gas recirculation pipe until they make contact.

❑ Adjust the rigid exhaust gas recircualtion pipe in relation to the cooler support on the timing end.

❑ Lock the snap-fit clip of the rigid exhaust gas recirculation pipe using the **(Mot. 1567)**.

❑ Torque tighten the **EGR rigid pipe bolts (35 N.m)**.

III - FINAL OPERATION

❑ Refit:

- the catalytic converter (see **19B**, **Exhaust**, **Catalytic converter: Removal - Refitting**, page **19B-46**) ,
- the coolant circulation cover,
- the coolant circulation cover bolts.

> **WARNING**
> Ensure that the water inlet and outlet hoses of the exhaust gas cooler are correctly aligned so that they do not bend.

K9K, and 732 or 734

- ❑ Torque tighten the **coolant circulation cover bolts (10 N.m)**
- ❑ Refit:
  - the lifting bracket on the timing end,
  - the lifting bracket on the timing end bolts.
- ❑ Torque tighten the **lifting bracket bolts on the timing end (10 N.m)**.
- ❑ Loosen the rail protector nut on the bracket.
- ❑ Refit the bolts mounting the rail protector bracket on the exhaust gas cooler assembly.
- ❑ Tighten:
  - the bolts mounting the rail protector bracket on the exhaust gas cooler assembly,
  - the rail protector nut on the bracket.
- ❑ Refit the damper valve (see **12A**, **Fuel mixture**, **Air inlet flap: Removal - Refitting**, page **12A-33**) .
- ❑ Connect the air inlet pressure sensor connector.
- ❑ Refit the clip on the air inlet duct if necessary.
- ❑ Position the air inlet duct.
- ❑ Clip the air inlet duct onto the turbocharger.
- ❑ Refit the air inlet duct bolt.
- ❑ Tighten the air inlet duct bolt.
- ❑ Connect the exhaust gas recirculation solenoid valve connector.
- ❑ Refit the oil vapour rebreathing pipe.
- ❑ Connect the battery (see **Battery : Removal - Refitting**) (80A, Battery).
- ❑ Fill and bleed the cooling system (see **19A**, **Cooling**, **Cooling circuit: Draining - Refilling**, page **19A-15**) .
- ❑ Refit:
  - the engine undertray,
  - the engine covers.
- ❑ Clear any faults stored by the computer using the **diagnostic tool**.

B84 or C84 or E84 or K84 or L84 or S84, and M9R

Essential special tooling	
Ms. 583	Hose clamp pliers.

Tightening torques ▽	
EGR cooler bolts	**25 N.m**
EGR rigid pipe bolts on the EGR cooler	**30 N.m**
EGR rigid pipe bolts on the exhaust manifold	**30 N.m**
EGR rigid pipe bolt on the cylinder head	**10 N.m**
EGR rigid pipe heat shield bolt on the cylinder head	**10 N.m**
EGR rigid pipe heat shield bolt on the exhaust manifold	**10 N.m**
front end panel upper bolts	**21 N.m**
front end panel lower bolts	**44 N.m**

REMOVAL

I - REMOVAL PREPARATION OPERATION

❑ Position the vehicle on a two-post lift (see **Vehicle: Towing and lifting**) (02A, Lifting equipment).

❑ Remove:

- the engine covers,
- the battery (see **Battery: Removal - Refitting**) (80A, Battery)
- the front bumper (see **Front bumper: Removal - Refitting**) (55A, Exterior protection).

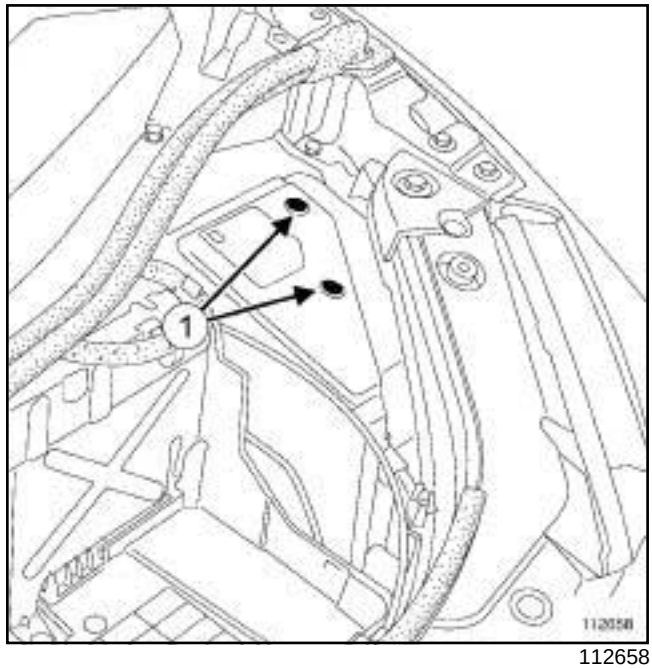

112658

❑ Remove:

- the engine accessories unit cover bolts (**1**) ,
- the engine accessories unit cover.

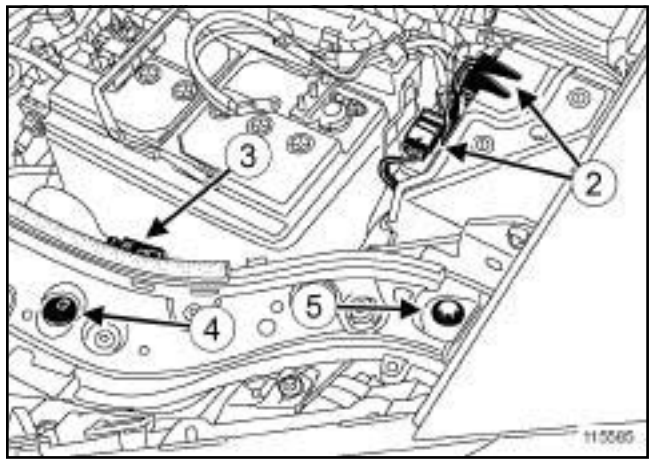

115585

❑ Disconnect the connectors (**2**) from the engine accessories unit.

❑ Unfasten the bonnet opening cable (**3**) .

❑ Remove:

- the clips (**4**) ,
- the front end panel upper bolts (**5**) .

❑ Disconnect the screen washer pipes.

B84 or C84 or E84 or K84 or L84 or S84, and M9R

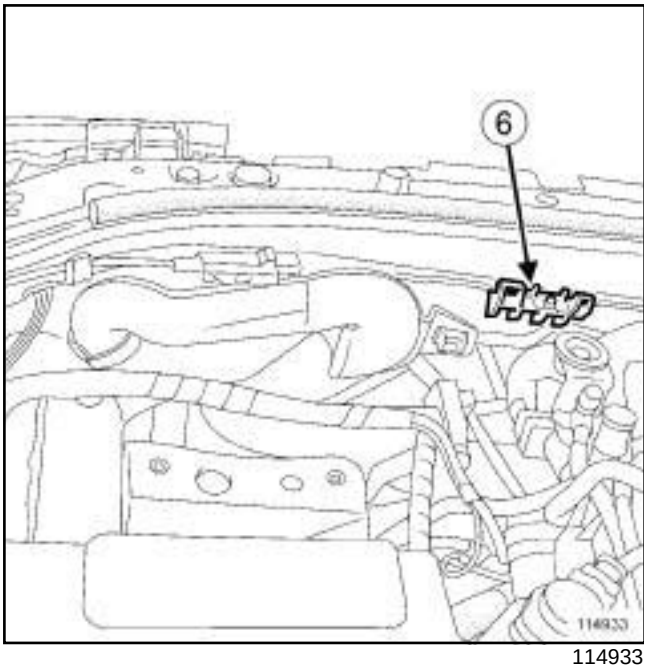

114933

❑ Unclip the air inlet scoop (**6**) .

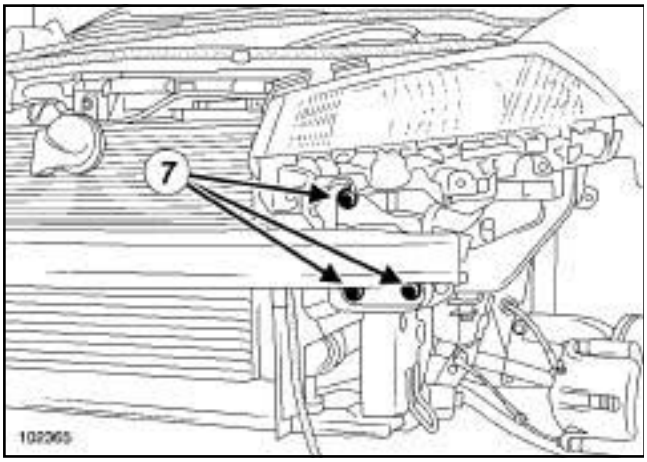

102365

❑ Remove:

- the front end panel lower bolts (**7**) ,
- the front of the vehicle.

❑ Remove:

- the battery tray (see **Battery tray: Removal - Refitting**) (80A, Battery),
- the damper valve (see **12A**, **Fuel mixture**, **Air inlet flap: Removal - Refitting**, page **12A-33**) ,
- the exhaust gas recirculation solenoid valve (see **14A**, **Antipollution**, **Exhaust gas recirculation solenoid valve: Removal - Refitting**, page **14A-23**) .

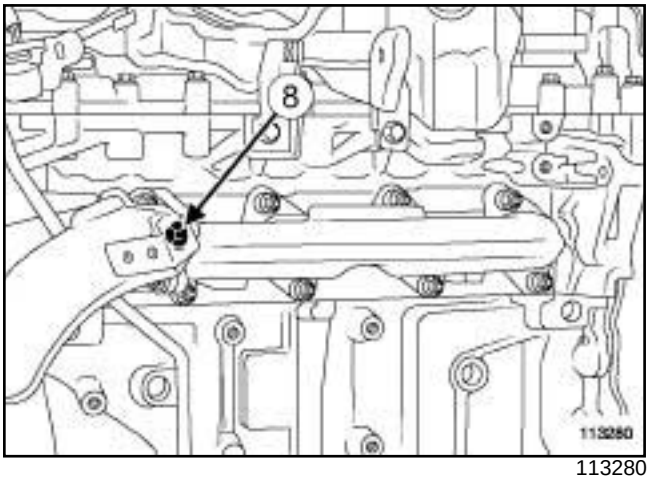

113280

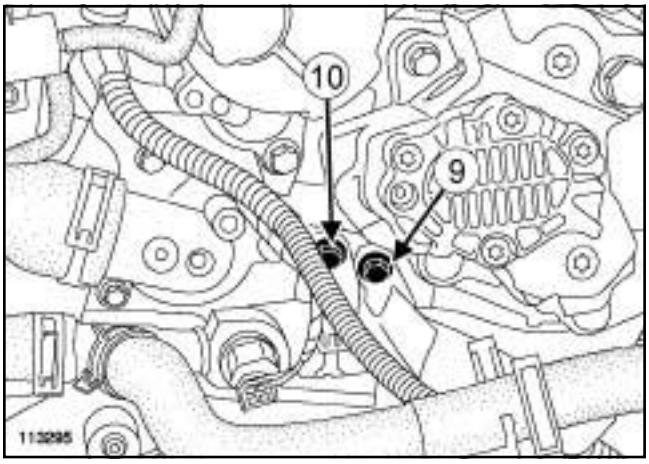

113295

❑ Remove:

- the bolt (**8**) from the EGR duct heat-resistant protector on the exhaust manifold,
- the bolt (**9**) from the EGR duct heat-resistant protector on the cylinder head,
- the EGR duct bolt (**10**) .

❑ Move the EGR duct heat-resistant protector to one side.

B84 or C84 or E84 or K84 or L84 or S84, and M9R

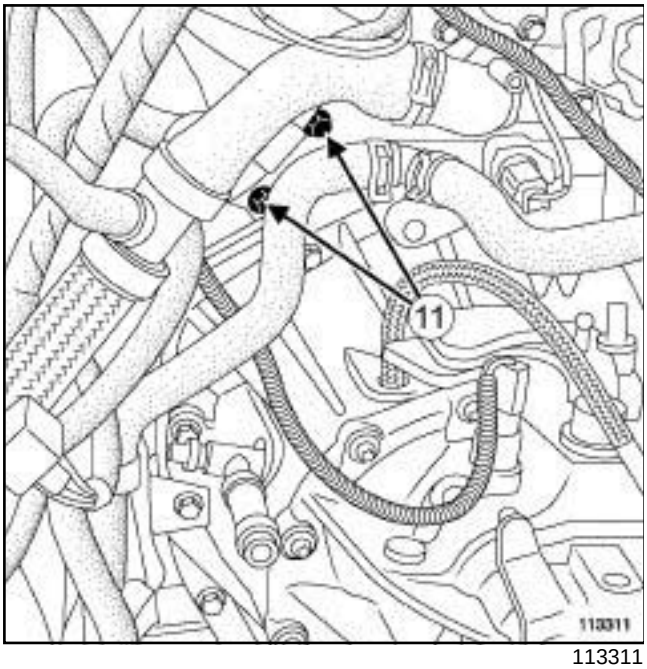

113311

❑ Remove the bolts (**11**) from the EGR duct on the exhaust manifold.

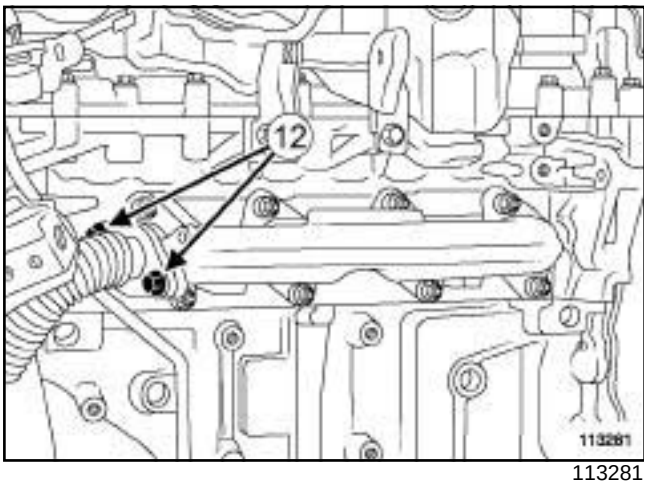

113281

❑ Remove the bolts (**12**) from the EGR duct on the exhaust manifold.

❑ Move the EGR duct to one side.

❑ Remove:

- the gasket between the EGR cooler and the EGR duct,
- the gasket between the EGR duct and the exhaust manifold.

II - OPERATION FOR REMOVAL OF PART CONCERNED

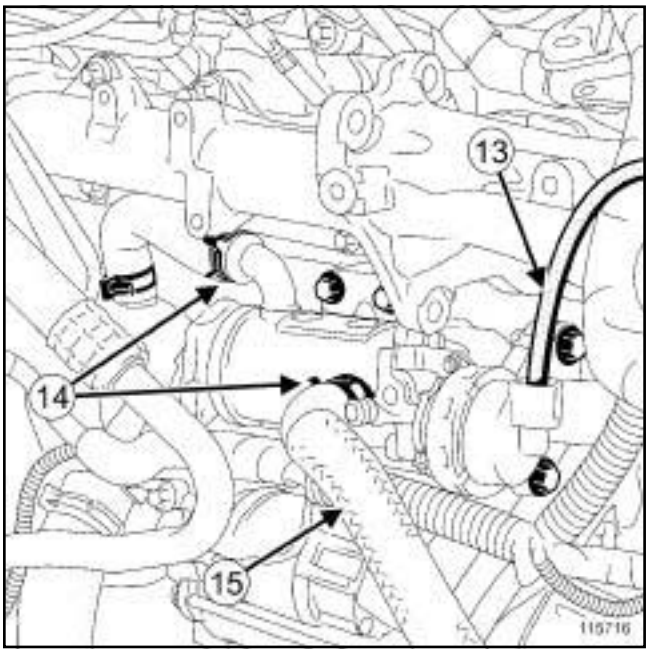

115716

❑ Disconnect the vacuum pipe (**13**) from the EGR cooler by-pass control diaphragm.

❑ Fit tools **(Ms. 583)** on the cooling pipes of the EGR cooler.

❑ Separate the cooling pipe clips (**14**) on the EGR cooler.

> **WARNING**
> Protect the starter from any leakage of coolant.

❑ Disconnect the coolant inlet pipe (**15**) on the EGR cooler.

B84 or C84 or E84 or K84 or L84 or S84, and M9R

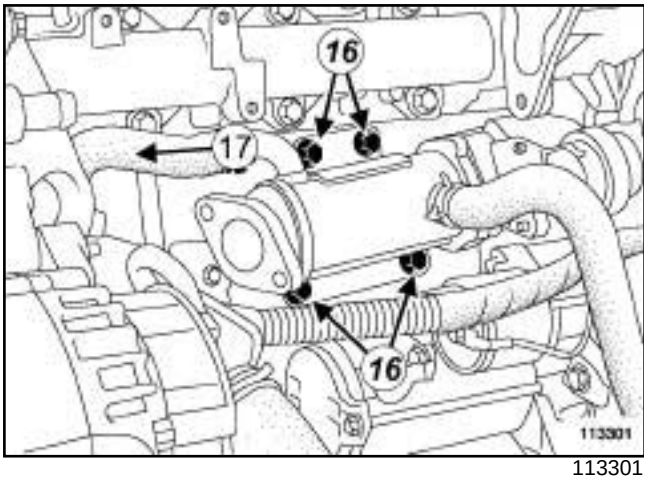

113301

❑ Remove the bolts (**16**) from the EGR cooler.

❑ Remove the EGR cooler.

❑ Disconnect the coolant outlet pipe (**17**) on the EGR cooler.

❑ Remove the intercooler.

REFITTING

I - REFITTING PREPARATION OPERATION

❑ Clean the joint faces.

❑ Replace:

- the EGR duct rigid pipe seal between the exhaust manifold and the EGR cooler on the EGR cooler side.
- the EGR rigid pipe seals between the EGR cooler and the EGR solenoid valve.

II - REFITTING OPERATION FOR PART CONCERNED

❑ Connect the coolant outlet pipe to the EGR cooler.

❑ Refit the EGR cooler onto the cylinder block.

❑ Torque tighten the **EGR cooler bolts (25 N.m)**.

❑ Connect the coolant inlet pipe to the EGR cooler.

❑ Refit:

- the clip of the coolant outlet pipe on the EGR cooler,
- the clip of the coolant inlet pipe on the EGR cooler.

❑ Remove the tool **(Ms. 583)**.

III - FINAL OPERATION

❑ Refit:

- the seal to the end of the EGR duct on the exhaust manifold side,
- the seal to the end of the EGR duct on the EGR cooler side,

❑ Fit without tightening:

- the EGR rigid pipe bolts on the exhaust manifold,
- the EGR rigid pipe bolts to the EGR cooler,
- the EGR rigid pipe bolt on the cylinder head.

❑ Torque tighten:

- the **EGR rigid pipe bolts on the EGR cooler (30 N.m)**,
- the **EGR rigid pipe bolts on the exhaust manifold (30 N.m)**,
- the **EGR rigid pipe bolt on the cylinder head (10 N.m)**.

❑ Refit the heat-resistant protector to the EGR rigid pipe.

❑ Fit without tightening:

- the EGR rigid pipe heat shield bolt on the cylinder head,
- the EGR rigid pipe heat shield bolt on the exhaust manifold.

❑ Torque tighten:

- the **EGR rigid pipe heat shield bolt on the cylinder head (10 N.m)**,
- the **EGR rigid pipe heat shield bolt on the exhaust manifold (10 N.m)**.

❑ Connect the vacuum pipe to the EGR cooler by-pass control diaphragm.

❑ Refit:

- the exhaust gas recirculation solenoid valve (see **14A**, **Antipollution**, **Exhaust gas recirculation solenoid valve: Removal - Refitting**, page **14A-23**) ,
- the damper valve (see **12A**, **Fuel mixture**, **Air inlet flap: Removal - Refitting**, page **12A-33**) ,
- the battery tray (see **Battery tray: Removal - Refitting**) (80A, Battery).

❑ Refit the front end panel

❑ Torque tighten:

- the **front end panel upper bolts (21 N.m)**,
- the **front end panel lower bolts (44 N.m)**.

B84 or C84 or E84 or K84 or L84 or S84, and M9R

- ❑ Clip on the air inlet scoop.
- ❑ Connect:
  - the screen washer pipes,
  - the engine accessories unit connectors.
- ❑ Clip the bonnet opening cable.
- ❑ Refit:
  - the clips,
  - the engine accessories unit cover.
- ❑ Refit:
  - the front bumper (see **Front bumper: Removal - Refitting**) (55A, Exterior protection),
  - the battery (see **Battery: Removal - Refitting**) (80A, Battery),
- ❑ Fill and bleed the cooling system (see **19A**, **Cooling**, **Cooling circuit: Draining - Refilling**, page **19A-15**) .
- ❑ Refit the engine covers.

Intercooler: Removal - Refitting

B84 or C84 or G84 or S84, and F9Q, and 808

The exhaust gas recirculation unit needs to be removed in order to remove the intercooler (see **14A**, **Antipollution**, **Exhaust gas recirculation unit: Removal - Refitting**, page **14A-35**) .

F9Q, and 803 or 804 or 816 or 818

Essential special tooling	
Mot. 1448	Long nose pliers for hose clips.

Tightening torques ▽	
exhaust gas cooler bolts	**25 N.m**
exhaust gas cooler clip (screw-on clip)	**5 N.m**
bolts of the exhaust gas recirculation pipe on the EGR solenoid valve	**18 N.m**
bolts of the exhaust gas recirculation pipe on the manifold	**11 N.m**

IMPORTANT
Wear heat protective gloves during the operation.

REMOVAL

I - REMOVAL PREPARATION OPERATION

❑ Position the vehicle on a two-post lift (see **Vehicle: Towing and lifting**) (02A, Lifting equipment).

❑ Remove:

- the engine cover,
- the battery (see **Battery: Removal - Refitting**) (80A, Battery),
- the battery tray (see **Battery tray: Removal - Refitting**) (80A, Battery),
- the front right-hand wheel (see **Wheel: Removal - Refitting**) (35A, Wheels and tyres),
- the engine undertray.

F9Q, and 804 or 816 or 818

❑ Drain the manual gearbox (see **Manual gearbox oil: Draining - Refilling**) (21A, Manual gearbox).

❑ Drain the engine cooling system (see **19A**, **Cooling**, **Cooling circuit: Draining - Refilling**, page **19A-15**) .

❑ Remove:

- the front right-hand driveshaft (see **Front right-hand wheel driveshaft: Removal - Refitting**) (29A, Driveshafts),
- the catalytic pre-converter (see **19B**, **Exhaust**, **Catalytic pre-converter: Removal - Refitting**, page **19B-29**) ,
- the starter (see **16A**, **Starting - Charging**, **Starter: Removal - Refitting**, page **16A-21**) .

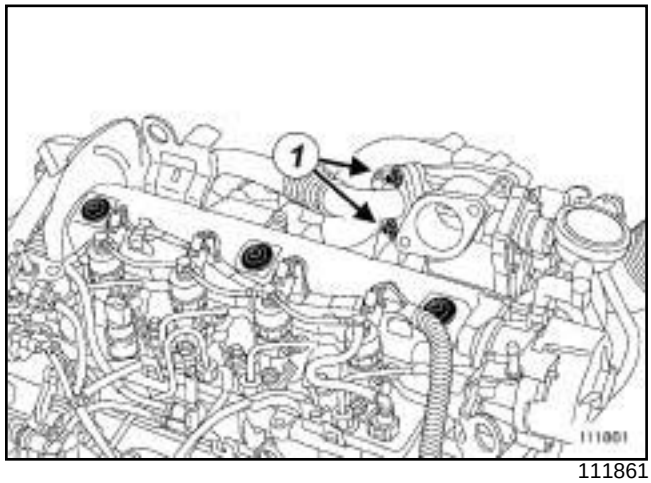

111861

❑ Remove the bolts (**1**) from the exhaust gas recirculation pipe on the EGR solenoid valve.

F9Q, and 803 or 804 or 816 or 818

Snap-on clip

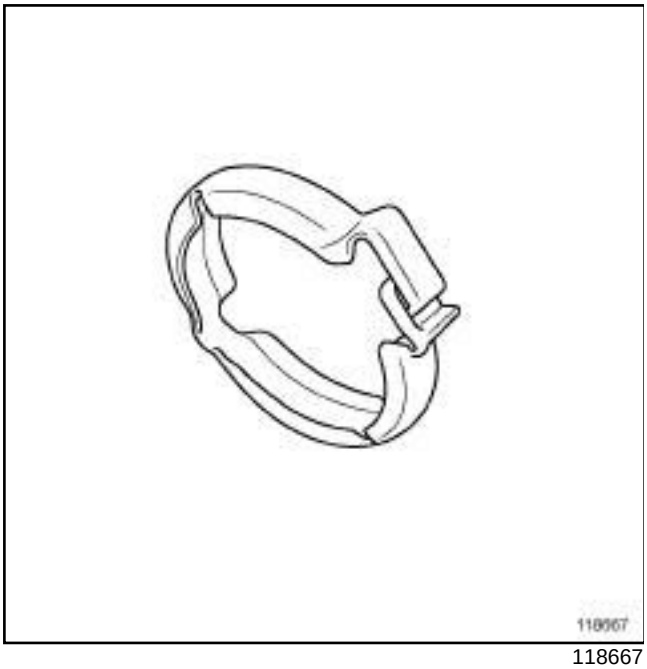

118667

Screw-in clip

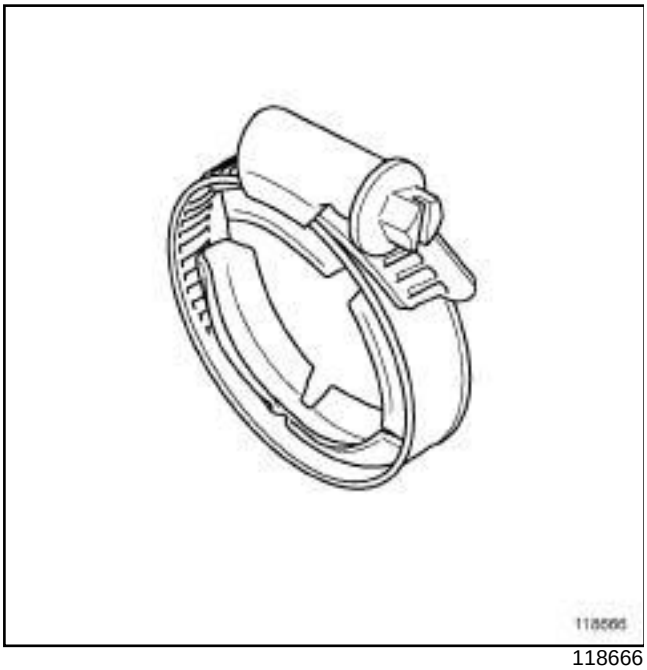

118666

❑

Note:

There are two types of clip fitted to the exhaust gas cooler:

- the snap-on clip,
- the screw-in clip.

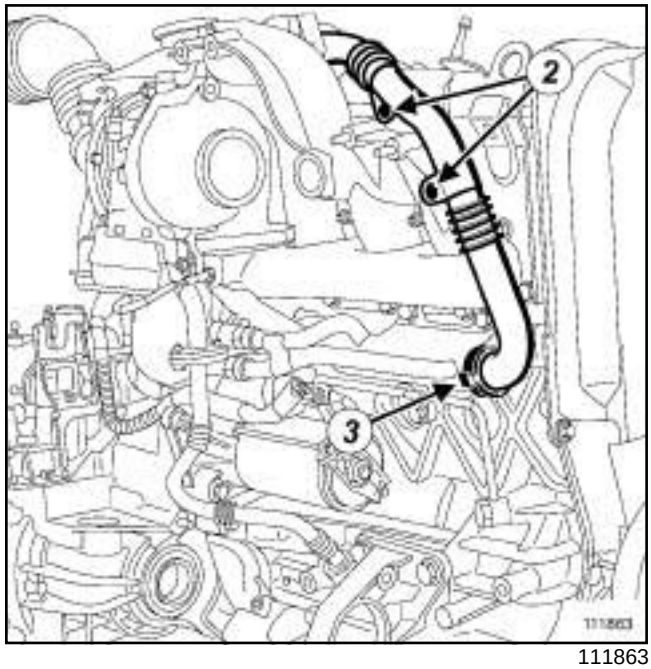

111863

❑ Remove:

- the clip (**2**) from the exhaust gas cooler using the **(Mot. 1448)** (snap-on clip) or using a screwdriver (screw-on clip),
- the bolts (**3**) from the exhaust gas recirculation pipe on the manifold,
- the exhaust gas recirculation pipe.

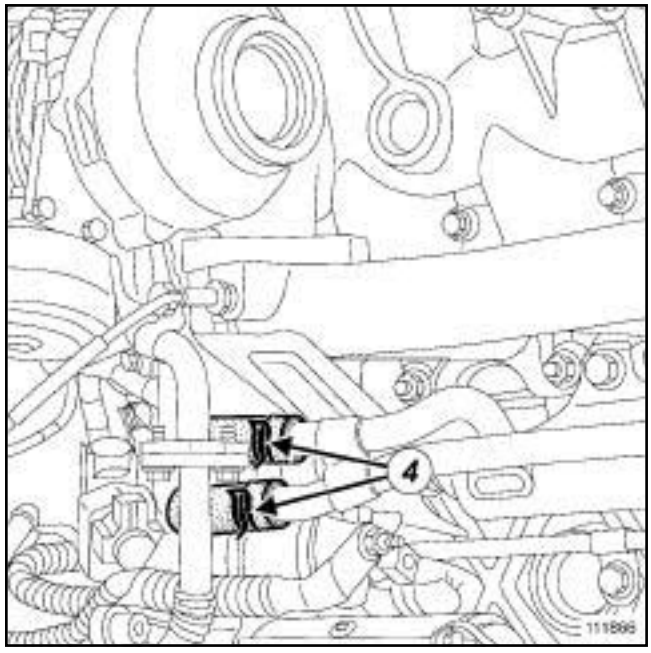

111866

❑ Separate the clips (**4**) on the cooling pipes of the exhaust gas cooler using the tool **(Mot. 1448)**.

❑ Disconnect the cooling pipes from the exhaust gas cooler.

F9Q, and 803 or 804 or 816 or 818

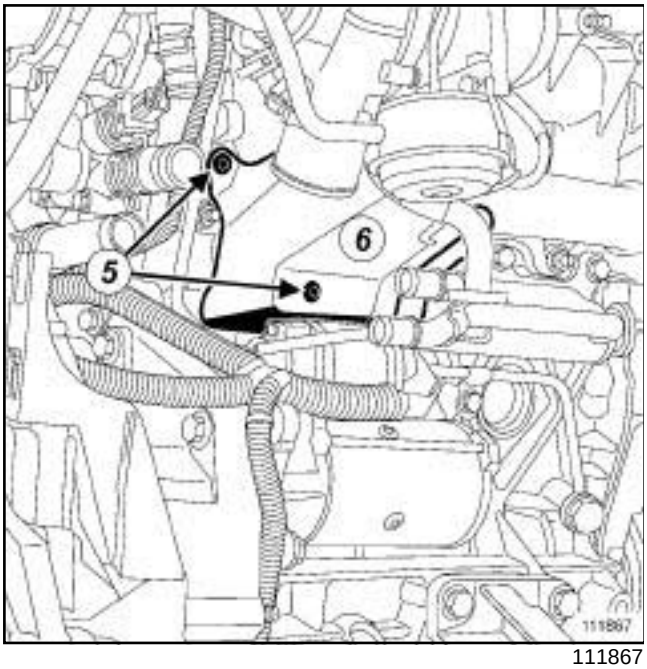

111867

❑ Remove:

- the bolts (**5**) from the heat shield,
- the heat shield (**6**) .

II - OPERATION FOR REMOVAL OF PART CONCERNED

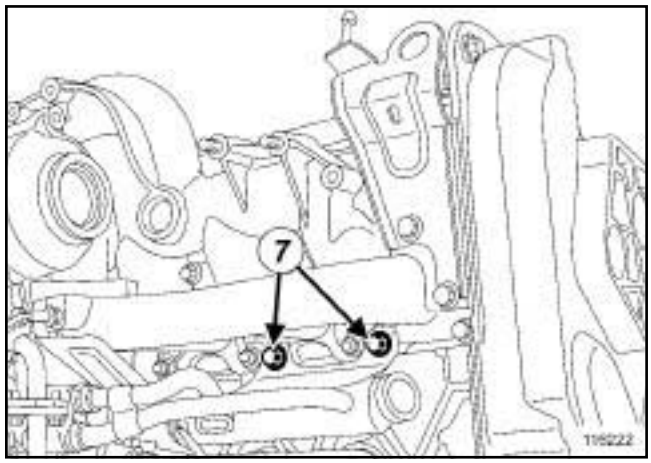

116222

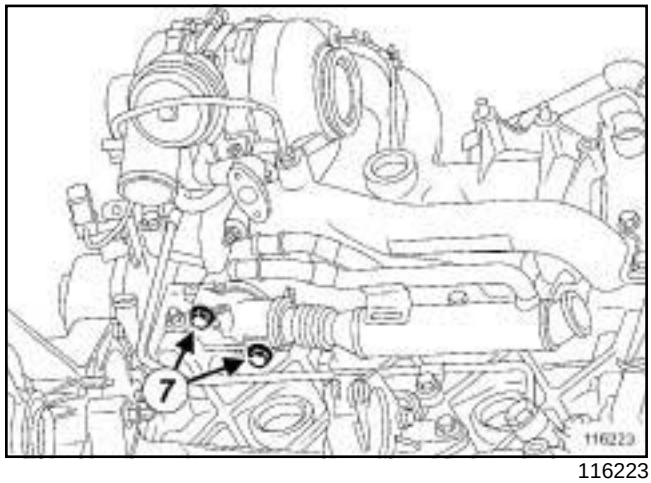

116223

❑ Remove:

- the bolts (**7**) from the exhaust gas cooler,
- the exhaust gas cooler.

REFITTING

I - REFITTING OPERATION FOR PART CONCERNED

❑ Refit the exhaust gas cooler equipped with a new seal.

❑ Fit the exhaust gas cooler bolts, without tightening them.

❑ Torque tighten the **exhaust gas cooler bolts (25 N.m)**.

II - FINAL OPERATION

❑ Refit:

- the heat shield,

F9Q, and 803 or 804 or 816 or 818

- the heat shield bolts.

❏ Connect the cooling pipes to the exhaust gas cooler.

❏ Fit the clips on the cooling pipes of the exhaust gas cooler using the tool **(Mot. 1448)**.

❏ Refit the exhaust gas recirculation pipe with a new seal.

❏ Fit without tightening:

- the bolts to the exhaust gas recirculation pipe on the manifold,
- the bolts of the exhaust gas recirculation pipe on the EGR solenoid valve.

❏ Refit the clip to the exhaust gas cooler using the **(Mot. 1448)** (snap-on clip) or a screwdriver (screw-in clip).

❏ Torque tighten:

- the **exhaust gas cooler clip (screw-on clip) (5 N.m)**,
- the **bolts of the exhaust gas recirculation pipe on the EGR solenoid valve (18 N.m)**,
- the **bolts of the exhaust gas recirculation pipe on the manifold (11 N.m)**.

❏ Refit:

- the starter (see **16A**, **Starting - Charging**, **Starter: Removal - Refitting**, page **16A-21**) ,
- the catalytic pre-converter (see **19B**, **Exhaust**, **Catalytic pre-converter: Removal - Refitting**, page **19B-29**) ,
- the front right-hand driveshaft (see **Front right-hand wheel driveshaft: Removal - Refitting**) (29A, Driveshafts).

F9Q, and 804 or 816 or 818

❏ Fill the manual gearbox (see **Manual gearbox oil: Draining - Refilling**) (21A, Manual gearbox).

❏ Refit:

- the engine undertray,
- the front right-hand wheel (see **Wheel: Removal - Refitting**) (35A, Wheels and tyres),
- the battery tray (see **Battery tray: Removal - Refitting**) (80A, Battery),
- the battery (see **Battery : Removal - Refitting**) (80A, Battery).

❏ Fill and bleed the cooling system (see **19A**, **Cooling**, **Cooling circuit: Draining - Refilling**, page **19A-15**) .

❏ Refit the engine cover.

B84 or C84 or G84 or S84, and K9K, and 724

Tightening torques ▽	
exhaust gas cooler bolts	**12 N.m**

REMOVAL

I - REMOVAL PREPARATION OPERATION

❑ Position the vehicle on a two-post lift (see **Vehicle: Towing and lifting**) (02A, Lifting equipment).

❑ Remove the front engine cover.

❑ Disconnect the battery (see **Battery: Removal - Refitting**) (80A, Battery).

❑ Remove:

- the engine undertray bolts,
- the engine undertray,
- the catalytic converter (see **19B**, **Exhaust**, **Catalytic converter: Removal - Refitting**, page **19B-46**) ,
- the exhaust gas recirculation rigid pipe (see **14A**, **Antipollution**, **Exhaust gas recirculation rigid pipe: Removal - Refitting**, page **14A-95**) ,
- the exhaust gas recirculation assembly (see **14A**, **Antipollution**, **Exhaust gas recirculation assembly: Removal - Refitting**, page **14A-61**) .

II - OPERATION FOR REMOVAL OF PART CONCERNED

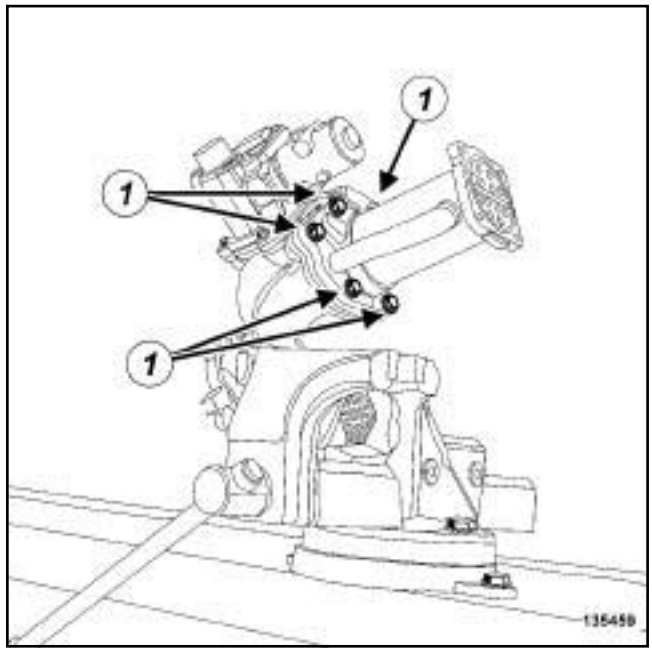

135459

❑ Remove the following on the workbench:

- the bolts (**1**) from the exhaust gas cooler,
- the exhaust gas cooler,
- the exhaust gas cooler seals.

REFITTING

I - REFITTING PREPARATION OPERATION

❑

> Note:
>
> Take care not to damage the exhaust gas cooler pressure faces on their mountings to prevent any coolant leaks.

❑ Use **ABRASIVE PADS** to clean the exhaust gas cooler pressure faces between the exhaust gas cooler and the exhaust gas recirculation mountings.

❑ Use **SURFACE CLEANER** (see **Vehicle: Parts and consumables for repair**) (04B, Consumables - Products) and **CLEAN CLOTHS** to degrease the pressure faces between the exhaust gas cooler and the exhaust gas recirculation mountings.

❑ **parts always to be replaced: exhaust gas cooler seal (11,07,01,17)**

B84 or C84 or G84 or S84, and K9K, and 724

II - REFITTING OPERATION FOR PART CONCERNED

❏ On the workbench, refit:

- new exhaust gas cooler seals,
- the exhaust gas intercooler.

> Note:
>
> Ensure that the seals between the cooler and its two supports are correctly positioned to avoid any coolant leaks.

❏ Torque tighten the **exhaust gas cooler bolts (12 N.m)**.

III - FINAL OPERATION

❏ Refit:

- the exhaust gas recirculation assembly (see **14A**, **Antipollution**, **Exhaust gas recirculation assembly: Removal - Refitting**, page **14A-61**) ,
- a new rigid exhaust gas recirculation pipe (see **14A**, **Antipollution**, **Exhaust gas recirculation rigid pipe: Removal - Refitting**, page **14A-95**) ,
- the catalytic converter (see **19B**, **Exhaust**, **Catalytic converter: Removal - Refitting**, page **19B-46**) ,
- the engine undertray.

❏ Connect the battery (see **Battery : Removal - Refitting**) (80A, Battery).

❏ Refit the engine cover.

Exhaust gas recirculation mounting: Removal - Refitting

B84 or C84 or G84 or S84, and K9K, and 732 or 734

To remove/refit the exhaust gas recirculation mountings (see **14A**, **Antipollution**, **Intercooler: Removal - Refitting**, page **14A-43**) .

K9K, and 724 or 732 or 734

Essential special tooling	
Ms. 583	Hose clamp pliers.
Mot. 1567	Long nose pliers for EGR duct clips.

Essential equipment
diagnostic tool

Tightening torques ▽	
the «EGR valve - exchanger» assembly	**25 to 30 N.m**
the exhaust gas recirculation pipe clip	**5 N.m**
the exhaust gas recirculation pipe bolts	**35 N.m**
bolts of the « exchanger - EGR valve » assembly	**25 to 30 N.m**
bolts of the rigid pipe on the manifold	**35 N.m**
bolts of the rigid pipe on the	**cooler12 N.m**
bolts of the engine lifting eye (timing end) to	**12 N.m**
coolant circulation cover bolts	**12 N.m**
intercooler air inlet pipe clip	**5.5 N.m**

IMPORTANT
Wear latex gloves during the operation.

IMPORTANT
Wear protective gloves during the operation.

IMPORTANT
Wear heat protective gloves during the operation.

WARNING
Prepare for the flow of fluid, and protect the surrounding components.

REMOVAL

I - REMOVAL PREPARATION OPERATION

❑ Position the vehicle on a two-post lift (see **Vehicle: Towing and lifting**) (02A, Lifting equipment).

❑ Remove the engine covers.

❑ Disconnect the battery (see **Battery: Removal - Refitting**) (80A, Battery).

❑ Remove:

- the engine undertray bolts,
- the engine undertray,
- the windscreen wiper arms (see **Windscreen wiper arm: Removal - Refitting**) (85A, Wiping - Washing),
- the scuttle panel grille (see **Scuttle panel grille: Removal - Refitting**) (55A, Exterior protection).

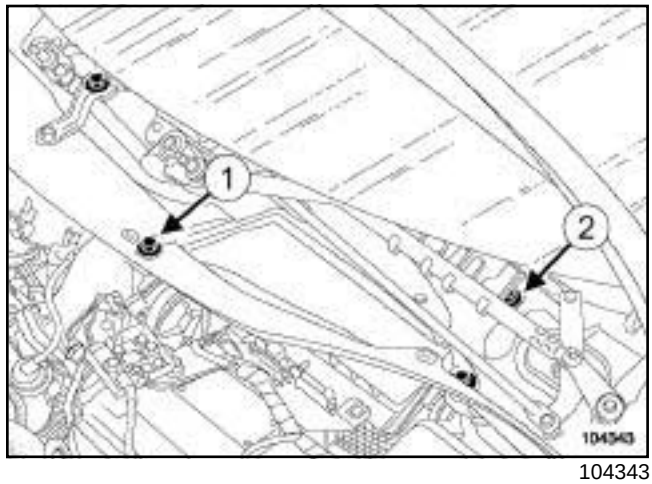

104343

❑ Remove:

- the air filter access panel bolts (**1**) ,
- the air filter access panel,
- the scuttle panel mounting bolt (**2**) .

K9K, and 724 or 732 or 734

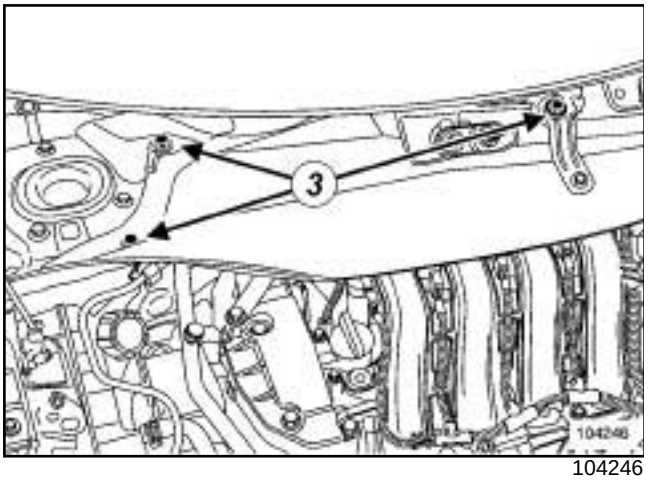

104246

❑ Remove:

- the scuttle panel partition bolts (**3**) ,
- the scuttle panel partition.

K9K, and 724

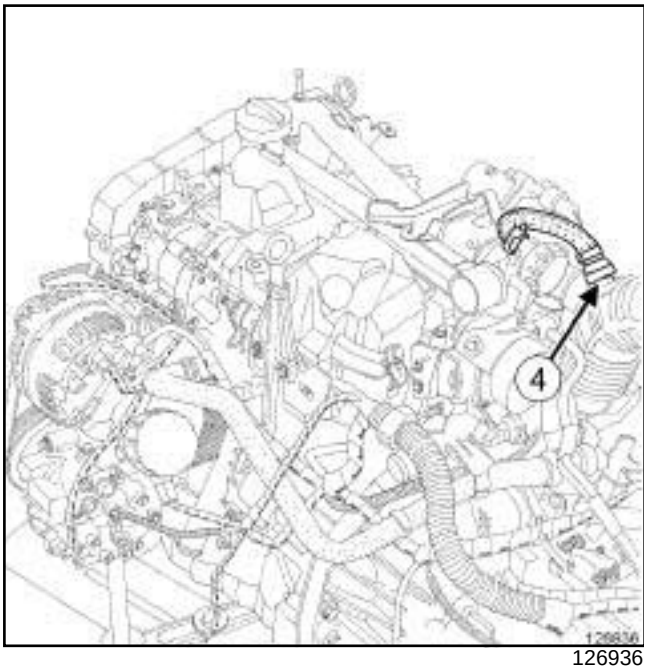

126936

❑ Disconnect the oil vapour rebreathing pipe (**4**) from the air filter unit air outlet pipe.

K9K, and 732 or 734

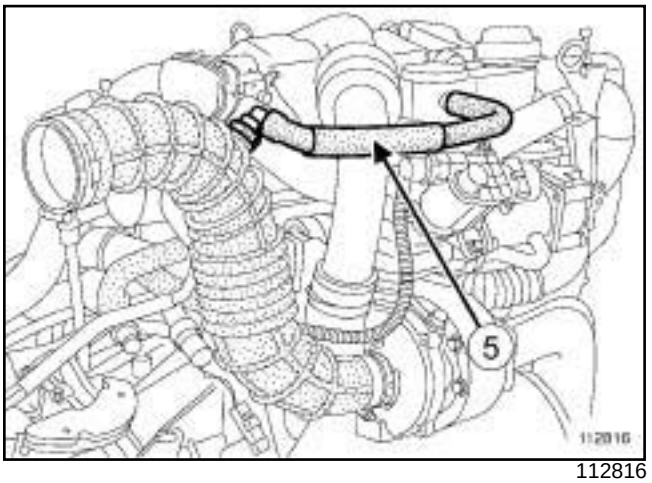

112816

❑ Disconnect the oil vapour rebreathing pipe (**5**) on the rocker cover side.

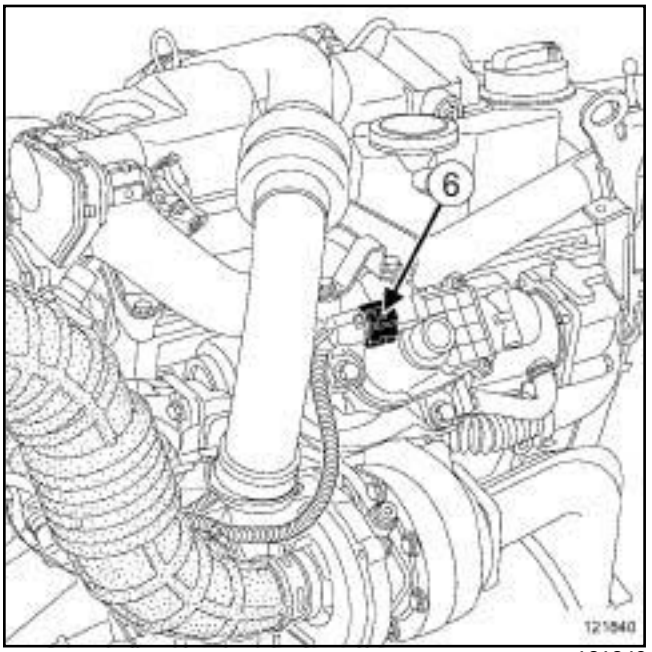

121840

❑ Disconnect the connector (**6**) from the exhaust gas recirculation solenoid valve.

K9K, and 724 or 732 or 734

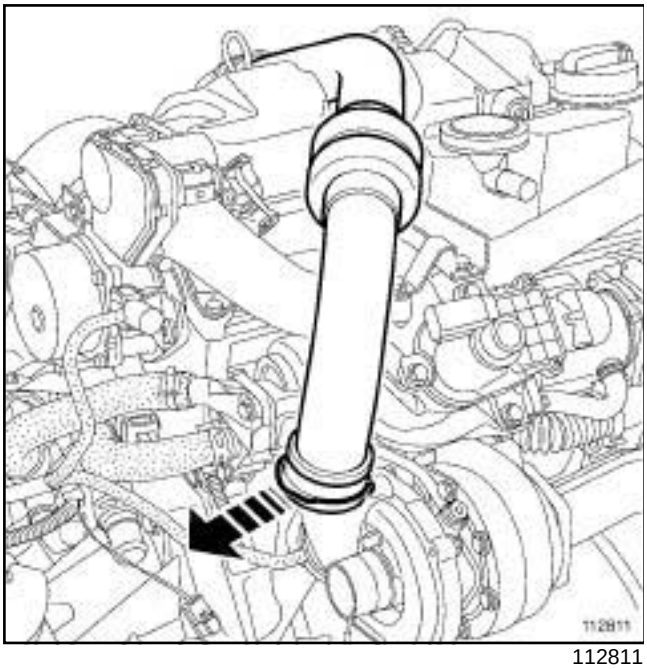

112811

❑ Pull the clip from the intercooler air inlet pipe.

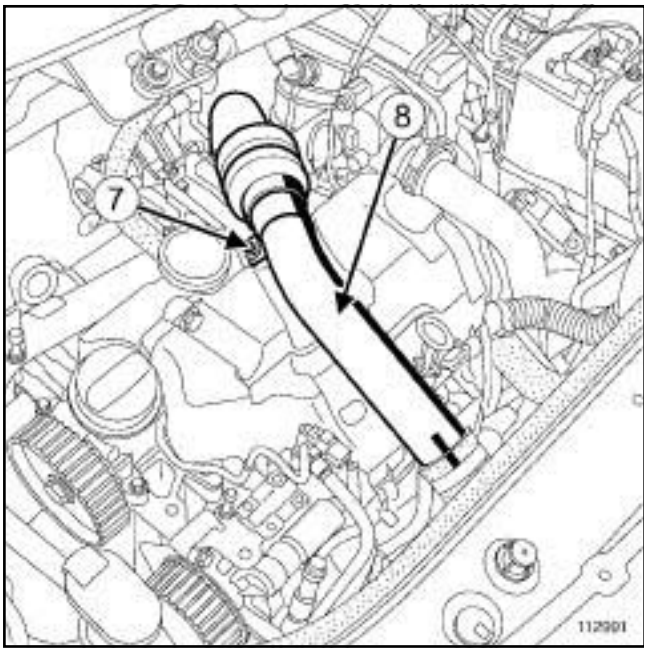

112991

❑ Remove the bolt (**7**) on the intercooler air inlet pipe.

❑ Move aside the intercooler air inlet pipe (**8**) .

K9K, and 732 or 734

❑ Remove the damper valve (see **12A**, **Fuel mixture**, **Air inlet flap: Removal - Refitting**, page **12A-33**) .

K9K, and 724

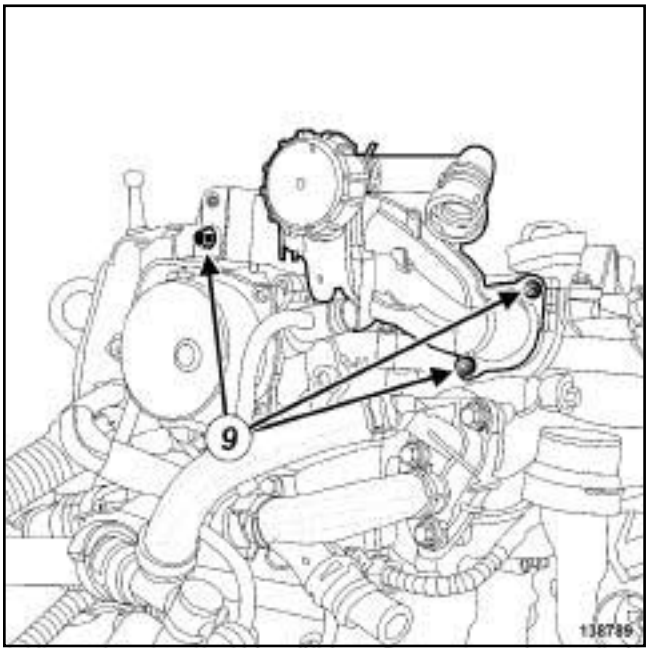

138789

❑ Remove:

- the bolts (**9**) from the oil vapour rebreathing valve,
- the oil vapour rebreathing valve,
- the seal of the oil vapour rebreathing valve.

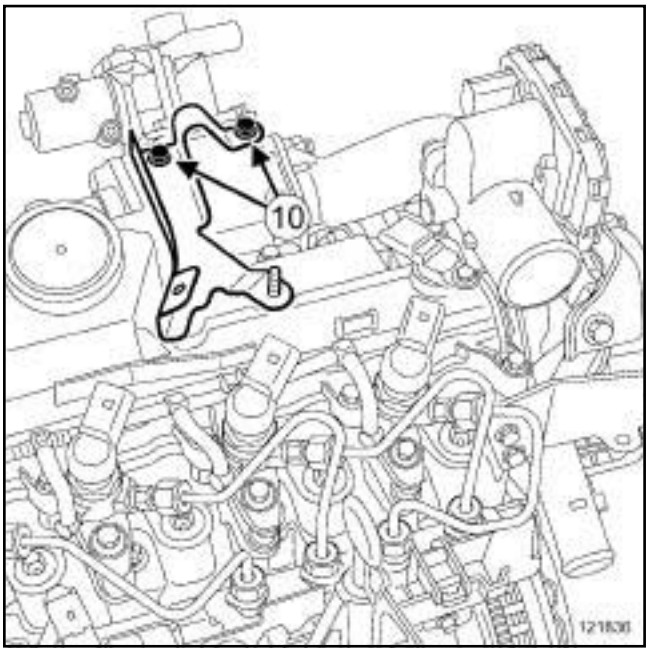

121836

❑ Remove the injector rail protector cover bracket bolts (**10**) .

K9K, and 724 or 732 or 734

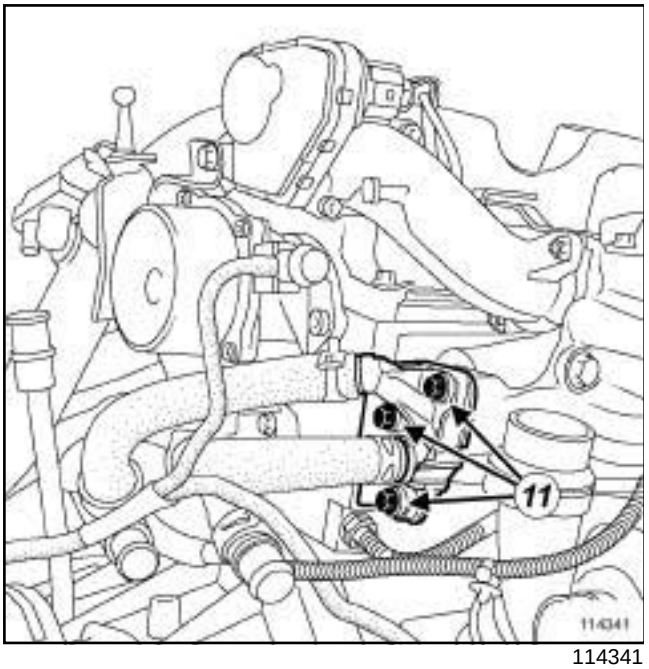

114341

- Position the tools **(Ms. 583)** on the coolant inlet and outlet pipes of the exhaust gas cooler.
- Remove the exhaust gas coolant circulation cover bolts (**11**) .
- Move the exhaust gas coolant circulation cover to one side.
- Remove the seals on the exhaust gas coolant circulation cover.

> Note:
>
> Be prepared for the escape of coolant.

K9K, and 724 or 732

- Remove the catalytic converter (see **19B**, **Exhaust**, **Catalytic converter: Removal - Refitting**, page **19B-46**) .

K9K, and 734

- Remove the catalytic pre-converter (see **19B**, **Exhaust**, **Catalytic pre-converter: Removal - Refitting**, page **19B-29**) .

II - OPERATION FOR REMOVAL OF PART CONCERNED

1 - First type of fitting of the exhaust gas recirculation assembly

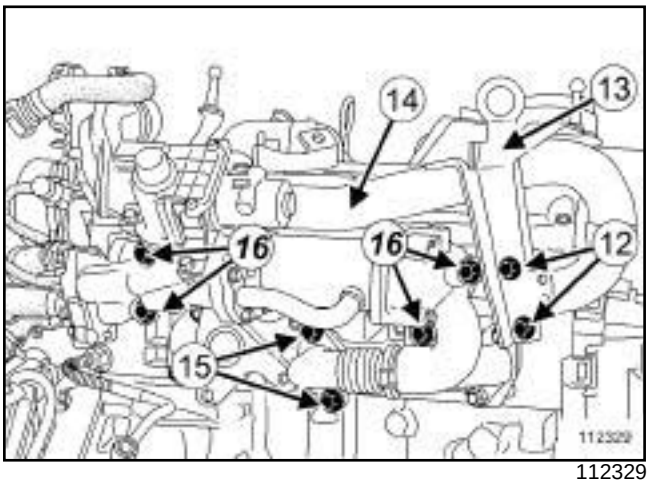

112329

- Remove:
  - the lifting bracket bolts (**12**) on the timing end,
  - the lifting bracket on the timing end (**13**) ,
  - the air inlet metal tube (**14**) ,
  - the bolts (**15**) from the EGR rigid pipe,
  - the exhaust gas recirculation unit assembly bolts (**16**) ,
  - the exhaust gas recirculation unit.

K9K, and 724 or 732 or 734

2 - Second type of fitting of the exhaust gas recirculation assembly

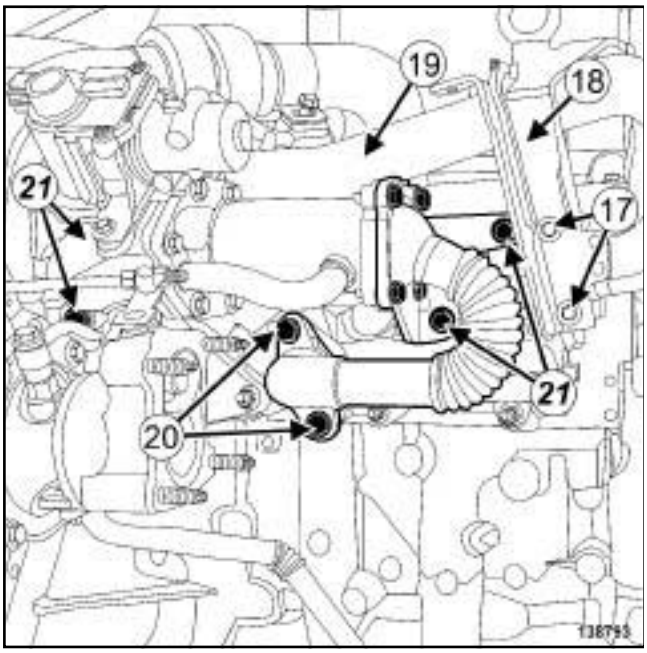

138793

❑ Remove:

- the lifting bracket bolts (**17**) on the timing end,
- the lifting bracket (**18**) on the timing end,
- the air inlet metal tube (**19**) ,
- the bolts (**20**) from the EGR rigid pipe,
- the exhaust gas recirculation unit assembly bolts (**21**) ,
- the exhaust gas recirculation unit.

REFITTING

I - REFITTING PREPARATION OPERATION

❑ Always replace the seals on the air inlet metal tube.

❑ **parts always to be replaced: Exhaust gas recirculation rigid pipe (11,07,01,08)**.

❑ **parts always to be replaced: exhaust gas recirculation pipe bolt (11,07,01,18)**.

❑ **parts always to be replaced: Exhaust gas recirculation pipe clip (11,07,01,14)**.

❑ Use **ABRASIVE PADS** (see **Vehicle: Parts and ingredients for the repairwork**) (04B, Consumables - Products) to clean the bearing faces:

- the turbocharger and the catalytic converter,
- the catalytic converter and the exhaust pipe,
- the exhaust gas recirculation solenoid valve and the exhaust gas recirculation unit,
- the coolant circulation cover within the exhaust gas cooler.

WARNING

Take care not to damage the bearing faces to prevent any risk of coolant leaks.

❑ Next, degrease these bearing faces using **SURFACE CLEANER** (see **Vehicle: Parts and ingredients for the repairwork**) (04B, Consumables - Products) and **CLEAN CLOTHS**.

WARNING

To ensure proper sealing, the gasket surfaces must be clean, dry and not greasy (avoid any finger marks).

K9K, and 724 or 732 or 734

Snap-on clip

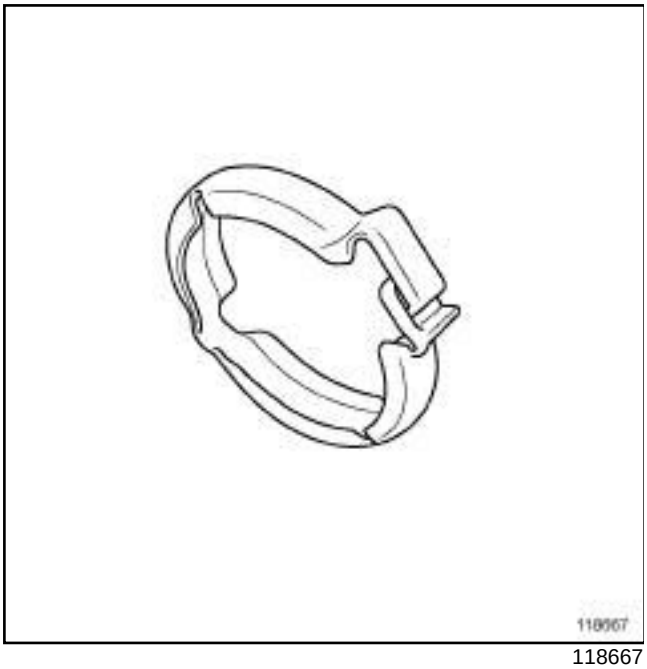

118667

Screw-in clip

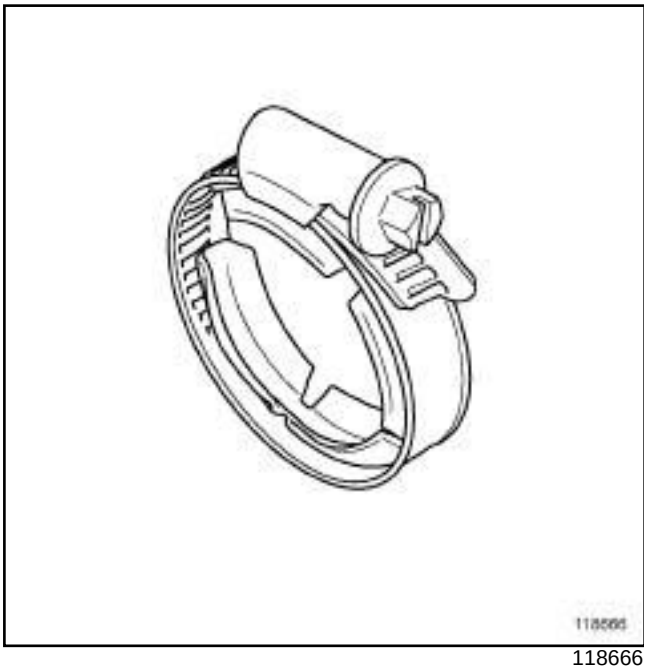

118666

❑

Note:

There are two types of clip fitted to the exhaust gas recirculation rigid pipe:

- snap-on clip,
- screw-in clip.

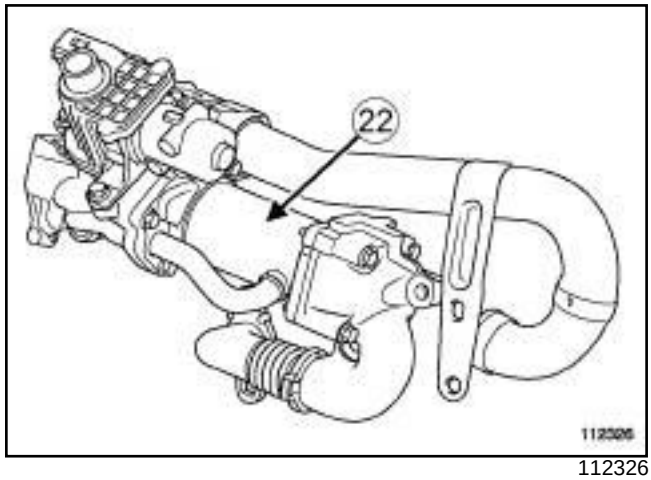

112326

❑ Remove the clip (**22**) from the exhaust gas recirculation rigid pipe using the tool **(Mot. 1567)** (snap-on clip) or with a screwdriver or ratchet fitted with a socket (screw-in clip).

K9K, and 724 or 732 or 734

II - REFITTING OPERATION FOR PART CONCERNED

1 - First type of fitting of the exhaust gas recirculation assembly

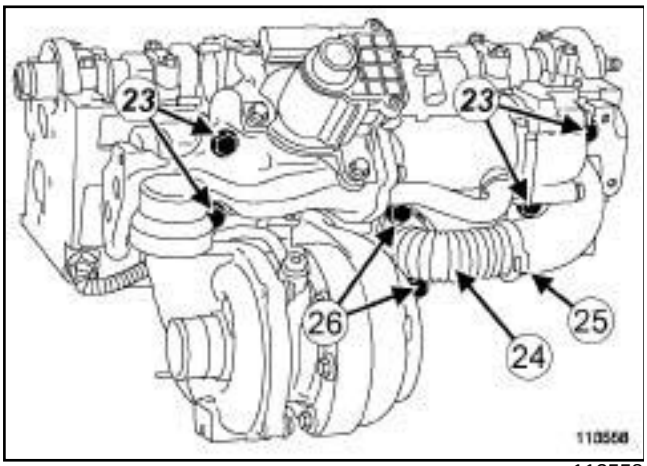

113558

- ❑ Refit:
  - the « exchanger - EGR valve » assembly,
  - the bolts (**23**) of the « exchanger - EGR valve » assembly.
- ❑ Torque tighten **the « EGR valve - exchanger » assembly (25 to 30 N.m)** (**26**) .
- ❑ Refit:
  - a new exhaust gas recirculation pipe (**24**) equipped with a new clip (**25**) and a new seal,
  - new bolts (**26**) on the exhaust gas recirculation pipe.
- ❑ Adjust the exhaust gas recirculation pipe in relation to the cooler support.
- ❑ Torque tighten:
  - **the exhaust gas recirculation pipe clip (5 N.m)**,
  - **the exhaust gas recirculation pipe bolts (35 N.m)** (**26**) .

K9K, and 724 or 732 or 734

2 - Second type of fitting of the exhaust gas recirculation assembly

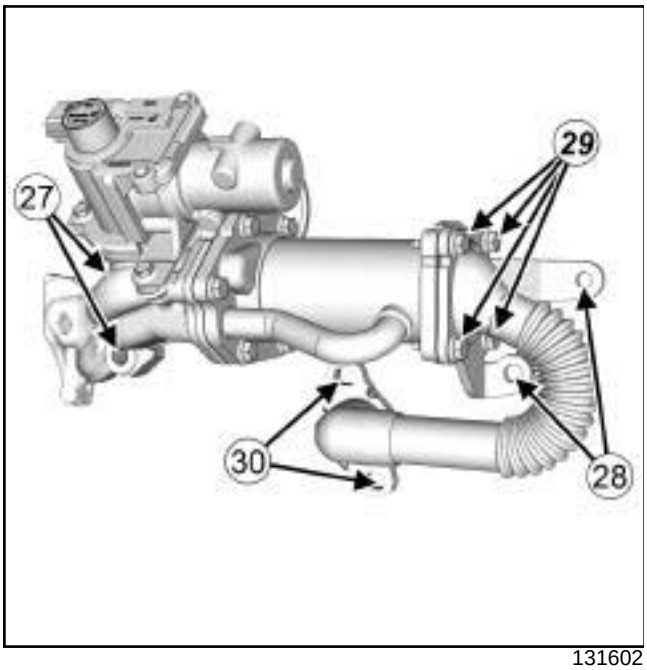

131602

❑ Refit:

- the « exchanger - EGR valve » assembly,
- the « EGR valve - exchanger » assembly bolts (**27**) and (**28**) .

❑ Adjust the position of the « exchanger - EGR valve » assembly in relation to the cylinder head.

❑ Screw on the bolts (**27**) and (**28**) without tightening.

❑ Remove:

- the bolts (**30**) of the rigid pipe on the cooler,
- the bolts (**28**) of the « exchanger - EGR valve » assembly,
- the rigid pipe and dispose of it in a waste bin,
- the seal of the rigid pipe and dispose of it in a waste bin,

❑ In order, fit (without tightening):

- the bolts (**30**) of the rigid pipe on the cooler,
- the bolts (**29**) of the « exchanger - EGR valve » assembly,
- the bolts (**30**) of the rigid pipe on the manifold.

❑ Tighten to torque and in order:

- the **bolts of the « exchanger - EGR valve» assembly (25 to 30 N.m)** (**27**) and (**28**) ,
- the **bolts of the rigid pipe on the manifold (35 N.m)** (**30**) ,
- the **bolts of the rigid pipe on the (cooler12 N.m)** (**29**) .

❑ Fit new seals to the air inlet duct.

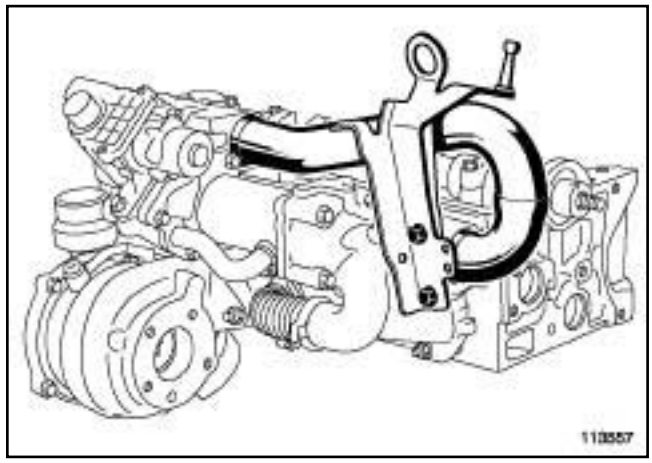

113557

❑ Refit:

- the inlet duct,
- the engine lifting eye (timing end).

❑ Torque tighten the **bolts of the engine lifting eye (timing end) to (12 N.m)** for M6 bolts or M8 bolts to **25 N.m**.

❑ Degrease the joint face receiving the vacuum pump and the cylinder head water chamber using **SURFACE CLEANER** (see **Vehicle: Parts and ingredients for the repairwork**) (04B, Consumables - Products).

III - FINAL OPERATION

K9K, and 734

❑ Refit the catalytic pre-converter (see **19B**, **Exhaust**, **Catalytic pre-converter: Removal - Refitting**, page **19B-29**) .

K9K, and 724 or 732

❑ Refit the catalytic converter (see **19B**, **Exhaust**, **Catalytic converter: Removal - Refitting**, page **19B-46**) .

❑ Fit the coolant circulation cover onto the exhaust gas recirculation unit assembly fitted with new seals.

❑ Torque tighten the **coolant circulation cover bolts (12 N.m)**.

K9K, and 724 or 732 or 734

- ❑ Remove the tools **(Ms. 583)** from the coolant inlet and outlet pipes of the exhaust gas cooler.
- ❑ Refit the bracket of the injector rail protector cover.

K9K, and 724

- ❑ Refit the oil vapour rebreathing valve.

K9K, and 732 or 734

- ❑ Refit the damper valve (see **12A**, **Fuel mixture**, **Air inlet flap: Removal - Refitting**, page **12A-33**) .

- ❑ Connect the turbocharger air outlet pipe to the intercooler air inlet pipe by aligning the marks.
- ❑ Clip the air outlet pipe of the turbocharger to the turbocharger.
- ❑ Refit the turbocharger air outlet pipe bolt.
- ❑ Torque tighten the **intercooler air inlet pipe clip (5.5 N.m)**.
- ❑ Connect:
  - exhaust gas recirculation solenoid valve connector ,
  - the oil vapour rebreathing pipe on the rocker cover.
- ❑ Refit:
  - the scuttle panel partition,
  - the scuttle panel partition bolts,
  - the scuttle panel mounting bolt,
  - the air filter access panel,
  - the air filter access panel bolts,
  - the scuttle panel grille (see **Scuttle panel grille: Removal - Refitting**) (55A, Exterior protection),
  - the windscreen wiper arms (see **Windscreen wiper arm: Removal - Refitting**) (85A, Wiping - Washing),
  - the engine undertray.
- ❑ Connect the battery (see **Battery : Removal - Refitting**) (80A, Battery).
- ❑ Fill and bleed the cooling system (see **19A**, **Cooling**, **Cooling circuit: Draining - Refilling**, page **19A-15**) .
- ❑ Using the **diagnostic tool** check that there are no stored faults; deal with these and clear them as necessary.

B84 or C84 or G84 or S84, and K9K, and 724

Essential special tooling	
Mot. 1448	Long nose pliers for hose clips.
Ms. 583	Hose clamp pliers.

Tightening torques ▽	
bolts of the exhaust gas recirculation assembly on the cylinder head	**25 N.m**
bolts of the exhaust gas recirculation rigid pipe bracket on the cylinder head	**25 N.m**
bolts of the exhaust gas recirculation rigid pipe on the exhaust manifold	**36 N.m**
bolts of the exhaust gas recirculation rigid pipe on the exhaust gas recirculation assembly	**12 N.m**
the engine lifting eye bolts (timing end)	**M6 bolts to 12 N.m or M8 bolts to 25 N.m**

IMPORTANT
Wear protective gloves during the operation.

REMOVAL

I - REMOVAL PREPARATION OPERATION

❑ Position the vehicle on a two-post lift (see **Vehicle: Towing and lifting**) (02A, Lifting equipment).

❑ Disconnect the battery (see **Battery: Removal - Refitting**) (80A, Battery).

❑ Remove the front engine cover.

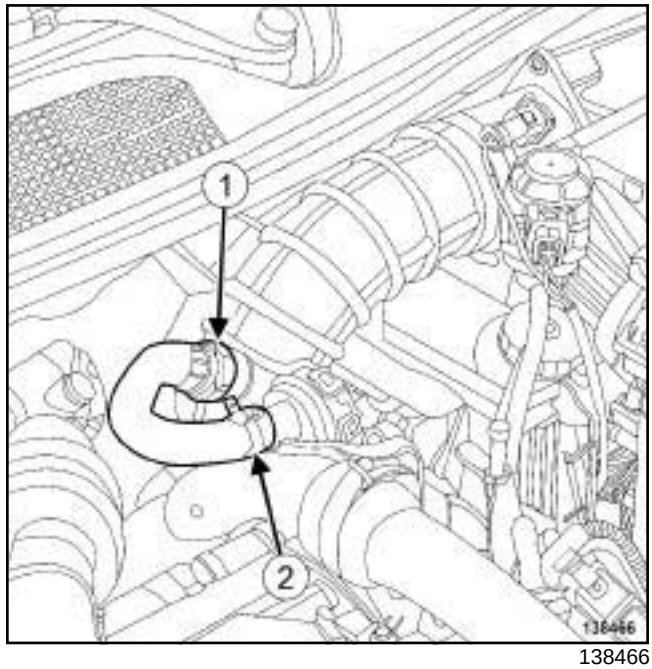

138466

❑ Disconnect the oil vapour rebreathing pipe from the air filter unit air outlet pipe at (**1**) .

❑ Remove the clip (**2**) of the oil vapour rebreathing pipe from the oil vapour rebreathing valve using the tool **(Mot. 1448)**.

❑ Disconnect the oil vapour rebreathing pipe from the oil vapour rebreathing valve.

❑ Remove the oil vapour rebreathing pipe.

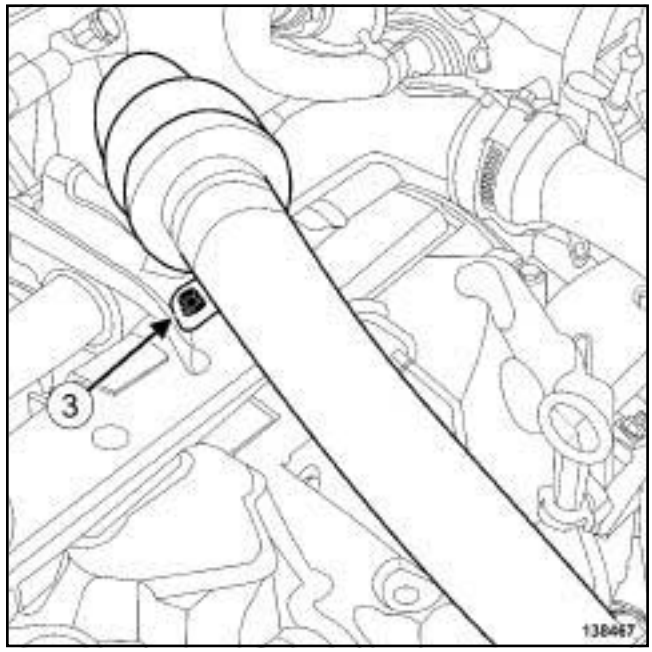

138467

❑ Remove the bolt (**3**) on the intercooler air inlet pipe.

B84 or C84 or G84 or S84, and K9K, and 724

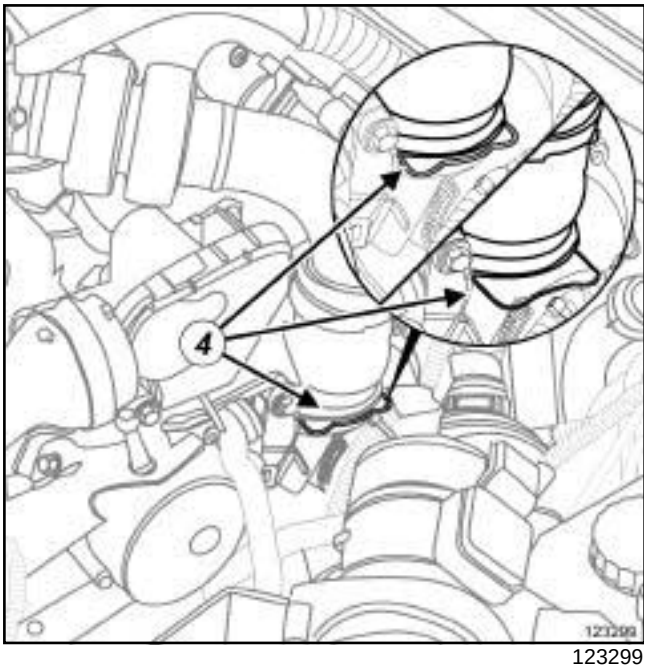

123299

- ❑ Pull the intercooler air inlet pipe clip (**4**) on the turbocharger side.
- ❑ Disconnect the intercooler air inlet pipe on the turbocharger side.
- ❑ Remove the intercooler inlet air pipe.

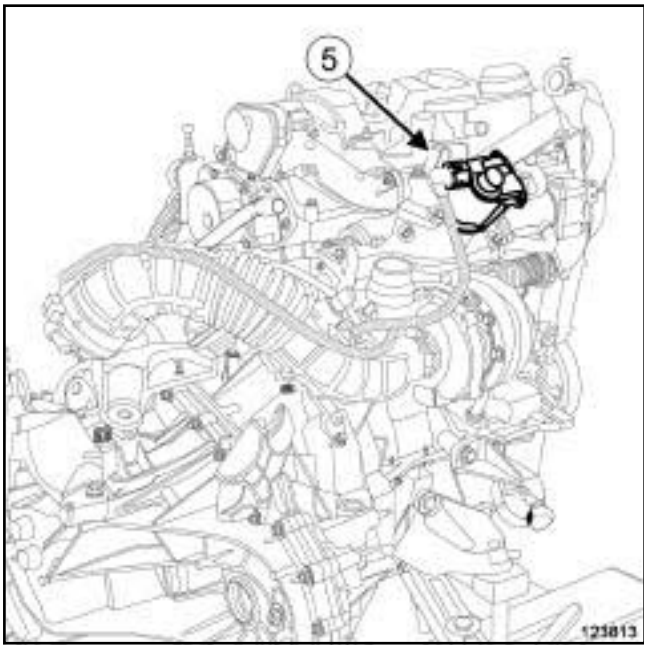

123813

- ❑ Disconnect the connector (**5**) from the exhaust gas recirculation solenoid valve.

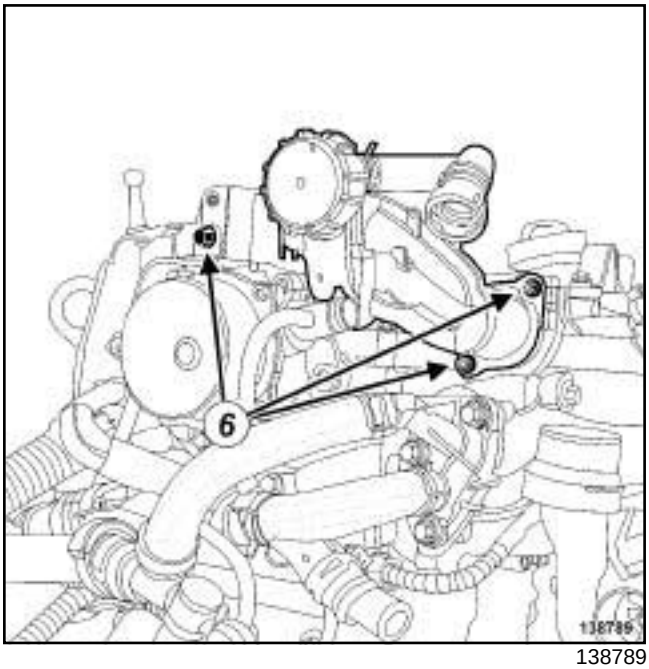

138789

- ❑ Remove:
  - the bolts (**6**) from the oil vapour rebreathing valve,
  - the oil vapour rebreathing valve.

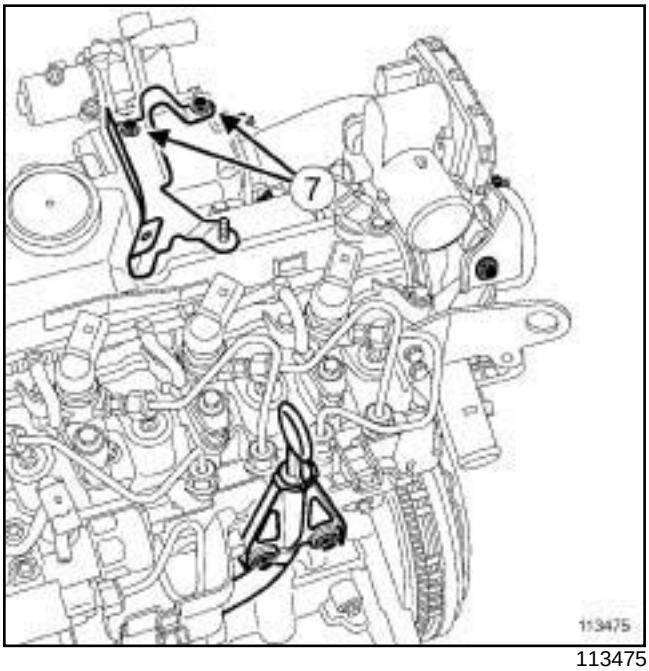

113475

- ❑ Remove:
  - the injector rail protector cover bracket bolts (**7**) ,
  - the bracket from the injector rail protector cover.

B84 or C84 or G84 or S84, and K9K, and 724

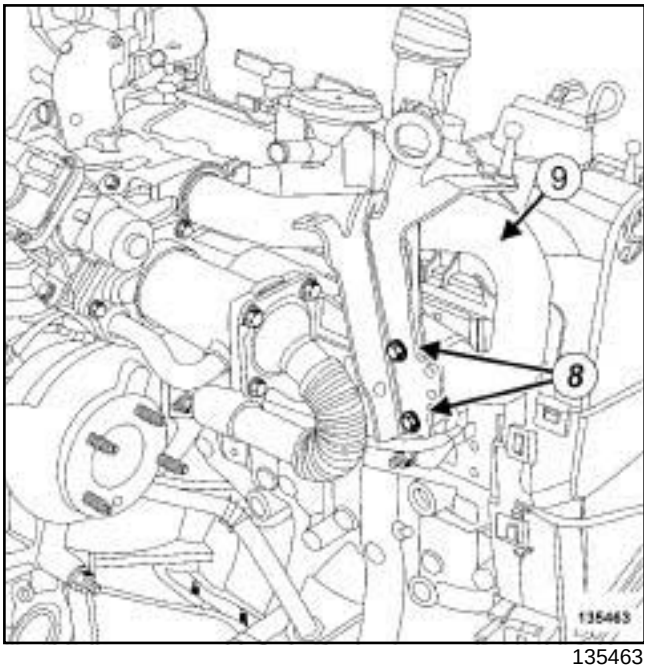

135463

❑ Remove:

- the bolts (**8**) from the "timing end lifting eye - air inlet metal tube" assembly,
- the lifting eye on the timing end,
- the air inlet metal tube (**9**) ,
- the engine undertray bolts,
- the engine undertray,
- the catalytic converter (see **19B**, **Exhaust**, **Catalytic converter: Removal - Refitting**, page **19B-46**) ,
- the rigid exhaust gas recirculation pipe (see **14A**, **Antipollution**, **Exhaust gas recirculation rigid pipe: Removal - Refitting**, page **14A-95**) .

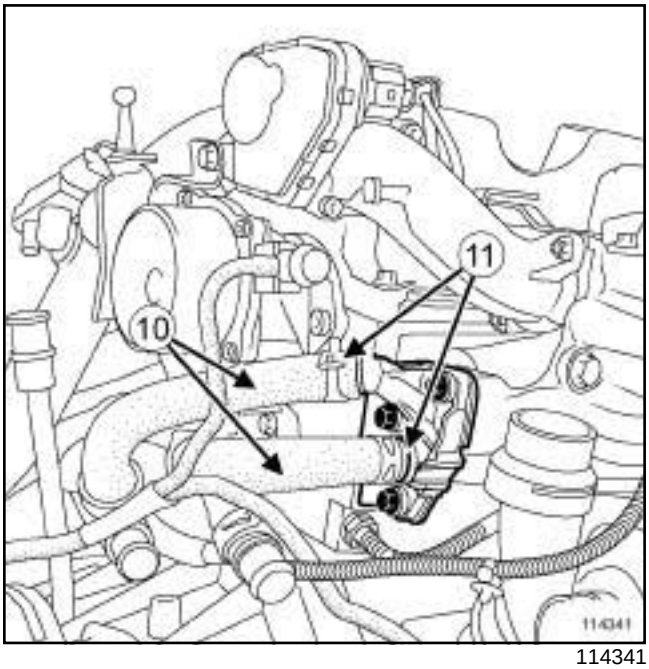

114341

❑ Fit the tool **(Ms. 583)** onto the hoses (**10**) of the exhaust gas cooler circuit cover.

❑ Remove the clips (**11**) from the exhaust gas cooler circuit cover hoses using the tool **(Mot. 1448)**.

WARNING

Prepare for the flow of fluid, and protect the surrounding components.

❑ Disconnect the hoses (**10**) from the cover of the exhaust gas cooler circuit.

B84 or C84 or G84 or S84, and K9K, and 724

II - OPERATION FOR REMOVAL OF PART CONCERNED

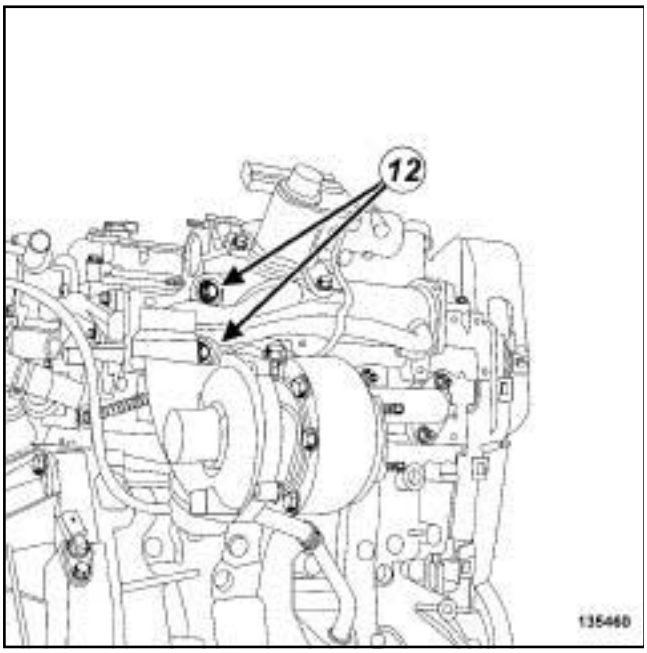

135460

❑ Remove:

- the bolts (**12**) from the exhaust gas recirculation assembly,
- the exhaust gas recirculation assembly.

REFITTING

I - REFITTING PREPARATION OPERATION

❑ Always replace the seals on the air inlet metal tube.

❑ Use **ABRASIVE PADS** to clean the joint faces of the exhaust gas cooler mounting on the gearbox end.

> **WARNING**
> Do not scrape the joint faces of the aluminium, any damage caused to the joint face will result in a risk of leaks.

❑ Use **SURFACE CLEANER** (see **Vehicle: Parts and consumables for repair**) (04B, Consumables - Products) to clean and degrease:

- the housing of each air inlet metal tube seal,
- the housing of the air inlet metal tube in the cylinder head,
- the housing of the air inlet metal tube in the exhaust gas cooler mounting on the gearbox end.

> **WARNING**
> To ensure proper sealing, the gasket surfaces must be clean, dry and not greasy (avoid any finger marks).

❑ **parts always to be replaced: Exhaust gas recirculation rigid pipe (11,07,01,08)**

❑ **parts always to be replaced: Exhaust gas recirculation pipe seal (11,07,01,15)**

II - REFITTING OPERATION FOR PART CONCERNED

❑ Fit the new exhaust gas recirculation rigid pipe with a new seal on the exhaust gas recirculation assembly.

❑ Refit the exhaust gas recirculation assembly equipped with the new exhaust gas recirculation rigid pipe on the cylinder head.

❑ Fit without tightening:

- the bolts of the exhaust gas recirculation assembly on the cylinder head,
- the bolts of the exhaust gas recirculation rigid pipe bracket on the cylinder head,
- the exhaust gas recirculation rigid pipe bolts on the exhaust manifold.

❑ Tighten to torque:

- the **bolts of the exhaust gas recirculation assembly on the cylinder head (25 N.m)**,
- the **bolts of the exhaust gas recirculation rigid pipe bracket on the cylinder head (25 N.m)**,
- the **bolts of the exhaust gas recirculation rigid pipe on the exhaust manifold (36 N.m)**,
- the **bolts of the exhaust gas recirculation rigid pipe on the exhaust gas recirculation assembly (12 N.m)**.

III - FINAL OPERATION

❑ Refit the air inlet metal tube.

B84 or C84 or G84 or S84, and K9K, and 724

- ❑ Connect the cooling hoses of the exhaust gas cooler cover.
- ❑ Fit the clips on the cooling hoses of the exhaust gas cooler cover using the tool **(Mot. 1448)**.
- ❑ Remove the **(Ms. 583)**.
- ❑ Refit:
  - the catalytic converter (see **19B**, **Exhaust**, **Catalytic converter: Removal - Refitting**, page **19B-46**) ,
  - the engine undertray,
  - the lifting eye on the timing end,
  - the bracket of the injector rail protector cover.
- ❑ Torque tighten **the engine lifting eye bolts (timing end) (M6 bolts to 12 N.m or M8 bolts to 25 N.m)**.
- ❑ Refit the oil vapour rebreathing valve.
- ❑ Connect the connector of the exhaust gas recirculation solenoid valve.
- ❑ Fit:
  - the intercooler air inlet pipe,
  - the clip on the intercooler inlet air pipe in its original position.
- ❑ Refit the oil vapour rebreathing pipe.
- ❑ Fit the clip of the oil vapour rebreathing pipe on the oil vapour rebreathing valve using the **(Mot. 1448)**.
- ❑ Refit the engine cover.
- ❑ Connect the battery (see **Battery: Removal - Refitting**) (80A, Battery).
- ❑ Fill and bleed the cooling system (see **19A**, **Cooling**, **Cooling circuit: Draining - Refilling**, page **19A-15**) .

B84 or C84 or G84 or S84, and K9K, and 732 or 734

Essential special tooling	
Mot. 1448	Long nose pliers for hose clips.

Tightening torques ▽	
exhaust gas recirculation assembly bolts	**25 to 30 N.m**
exhaust gas recirculation rigid pipe clip	**5 N.m**
exhaust gas recirculation rigid pipe bolts	**35 N.m**

REMOVAL

I - REMOVAL PREPARATION OPERATION

❑ Disconnect the battery (see **Battery: Removal - Refitting**) (80A, Battery).

❑ Remove the engine covers.

❑ Remove the oil vapour rebreathing pipe.

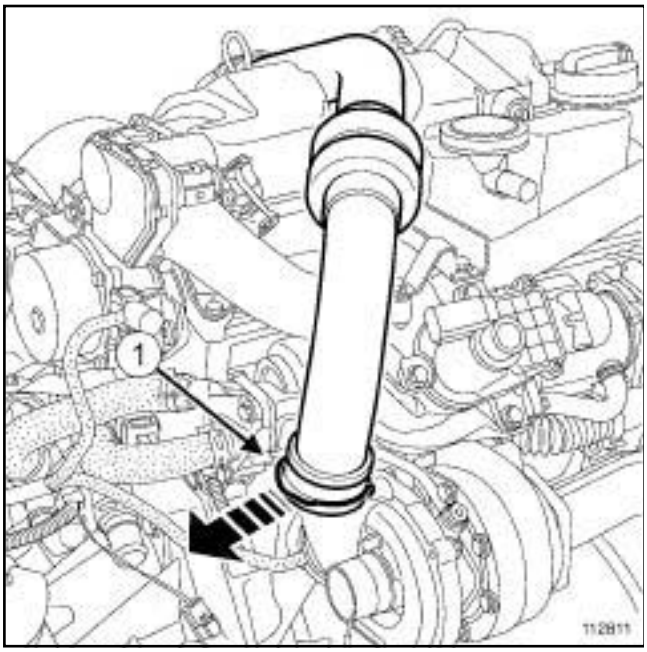

112811

❑ Pull out clip (**1**) .

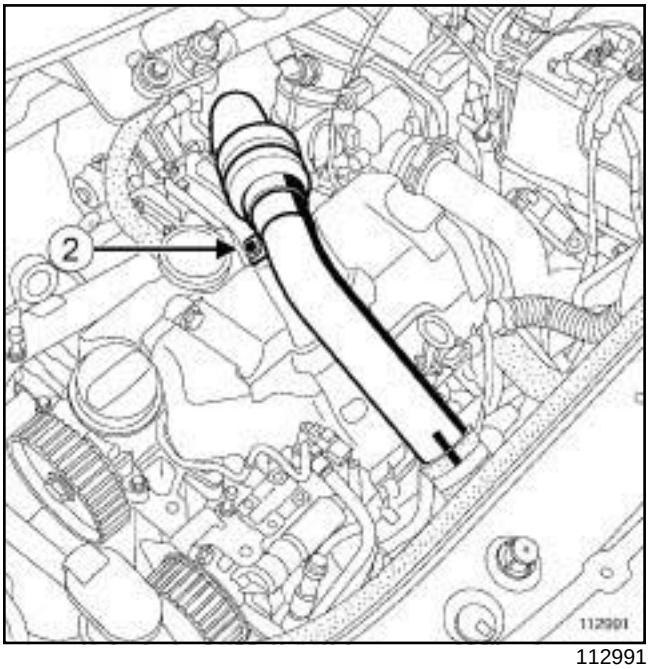

112991

❑ Remove the bolt (**2**) on the intercooler air inlet pipe.

❑ Remove the intercooler inlet air pipe.

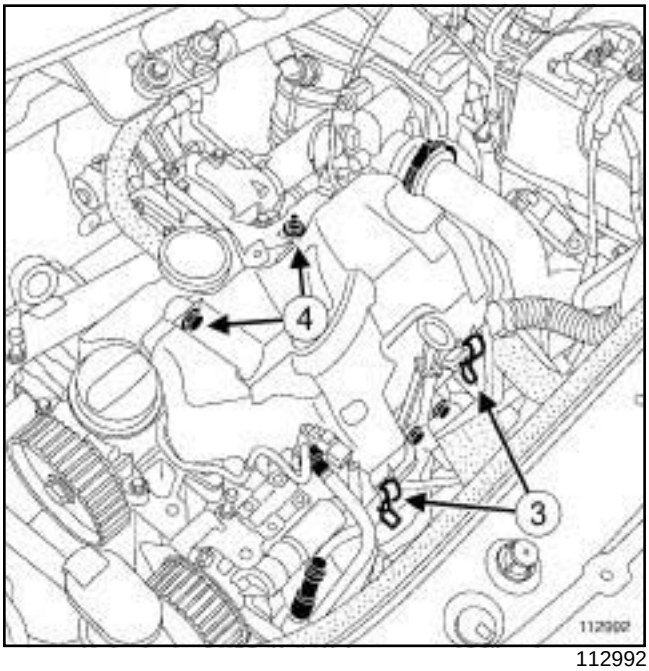

112992

❑ Unclip the injector rail protector cover (**3**) .

❑ Remove:

- the bolt and the nut (**4**) from the injector rail protector cover,
- the injector rail protector cover,

❑ Disconnect the exhaust gas recirculation solenoid valve connector.

B84 or C84 or G84 or S84, and K9K, and 732 or 734

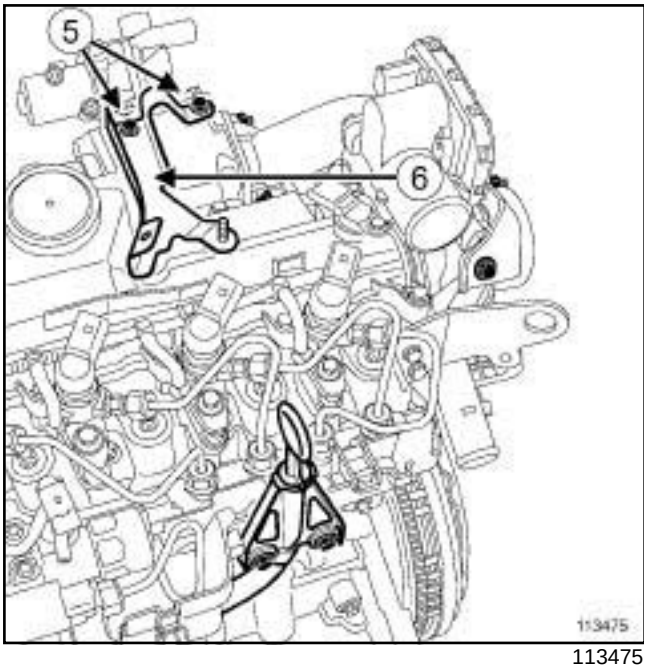

113475

❑ Remove:

- the injector rail protector cover bracket bolts (**5**) ,
- the bracket (**6**) from the injector rail protector cover.

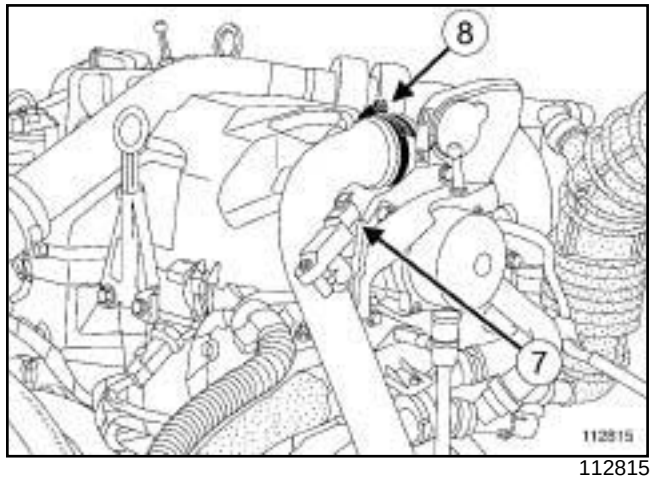

112815

❑ Disconnect the connector (**7**) from the turbocharging pressure sensor

❑ Loosen the clip (**8**) on the intercooler outlet air pipe.

❑ Move the intercooler outlet air pipe to one side.

❑ Remove:

- the damper valve (see **12A**, **Fuel mixture**, **Air inlet flap: Removal - Refitting**, page **12A-33**) ,
- the catalytic converter (see **19B**, **Exhaust**, **Catalytic converter: Removal - Refitting**, page **19B-46**) .

❑ Drain the cooling system (see **19A**, **Cooling**, **Cooling circuit: Draining - Refilling**, page **19A-15**) .

❑ Remove the clips from the hoses of the exhaust gas cooler using the tool **(Mot. 1448)**

❑ Disconnect the hoses from the exhaust gas cooler.

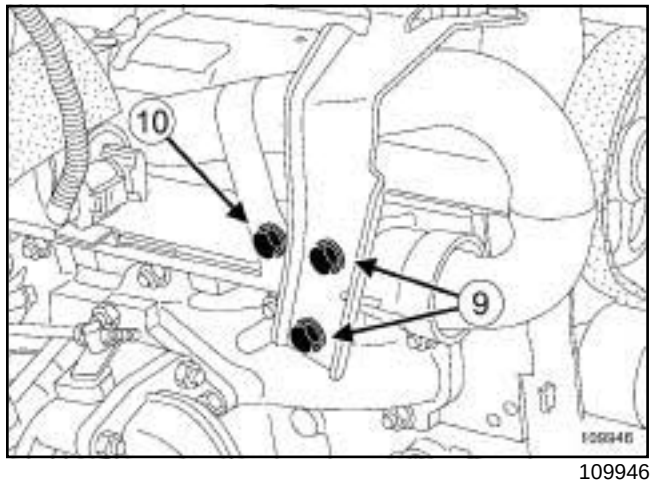

109946

❑ Remove:

- the lifting eye bolts (**9**) on the timing end,
- the lifting eye on the timing end,
- the bolt (**10**) from the air inlet metal tube,

B84 or C84 or G84 or S84, and K9K, and 732 or 734

- air inlet metal tube.

II - OPERATION FOR REMOVAL OF PART CONCERNED

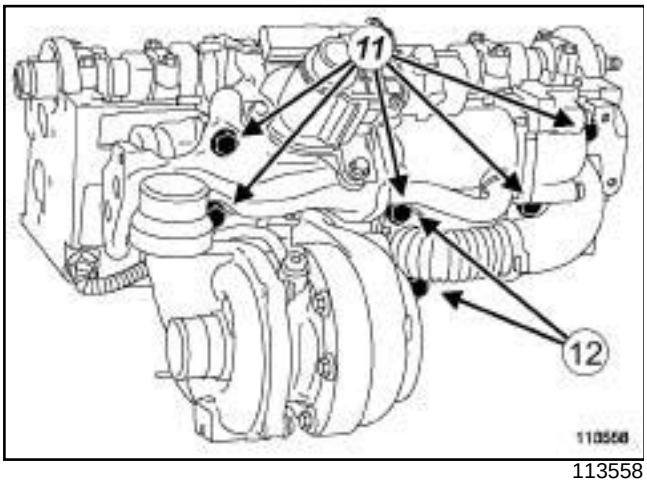

113558

❑ Remove:

- the bolts (**11**) from the exhaust gas recirculation assembly,
- the bolts (**12**) from the EGR rigid pipe,
- the exhaust gas recirculation assembly.

REFITTING

I - REFITTING PREPARATION OPERATION

❑ **parts always to be replaced: Exhaust gas recirculation rigid pipe (11,07,01,08)**

❑ **parts always to be replaced: Exhaust gas recirculation pipe clip (11,07,01,14)**

❑ **parts always to be replaced: Exhaust gas recirculation pipe seal (11,07,01,15)**

II - REFITTING OPERATION FOR PART CONCERNED

❑ Refit the exhaust gas recirculation assembly.

❑ Torque tighten the **exhaust gas recirculation assembly bolts (25 to 30 N.m)**.

❑ Refit:

- a rigid exhaust gas recirculation pipe with a new seal,
- a new clip to the exhaust gas recirculation rigid pipe.

❑ Adjust the exhaust gas recirculation rigid pipe in relation to the exhaust gas cooler support.

❑ Tighten to torque:

- the **exhaust gas recirculation rigid pipe clip (5 N.m)**,
- the **exhaust gas recirculation rigid pipe bolts (35 N.m)**.

❑ Refit the catalytic converter (see **19B**, **Exhaust**, **Catalytic converter: Removal - Refitting**, page **19B-46**) .

❑ Connect the cooling hoses to the exhaust gas recirculation assembly.

❑ Fit the cooling hose clips using the tool **(Mot. 1448)**.

❑ Refit:

- the air inlet metal tube,
- the lifting eye on the timing end,
- the damper valve (see **12A**, **Fuel mixture**, **Air inlet flap: Removal - Refitting**, page **12A-33**) ,
- the bracket of the injector rail protector cover.

❑ Fit the intercooler air outlet pipe.

❑ Tighten the clip on the intercooler outlet pipe.

❑ Connect the exhaust gas recirculation solenoid valve connector.

❑ Refit:

- the injector rail protector cover,
- the intercooler air inlet pipe,
- the bolt on the intercooler air inlet pipe,
- the oil vapour rebreathing pipe .

❑ Fill and bleed the cooling system (see **19A**, **Cooling**, **Cooling circuit: Draining - Refilling**, page **19A-15**) .

❑ Connect the battery (see **Battery : Removal - Refitting**) (80A, Battery).

❑ Refit the engine covers.

K9K, and 724 or 732 or 734

Essential special tooling	
Ms. 583	Hose clamp pliers.
Mot. 1567	Long nose pliers for EGR duct clips.

Essential equipment
diagnostic tool

Tightening torques ▽	
the «EGR valve - exchanger» assembly	**25 to 30 N.m**
the exhaust gas recirculation pipe clip	**5 N.m**
the exhaust gas recirculation pipe bolts	**35 N.m**
bolts of the « exchanger - EGR valve » assembly	**25 to 30 N.m**
bolts of the rigid pipe on the manifold	**35 N.m**
bolts of the rigid pipe on the	**cooler12 N.m**
bolts of the engine lifting eye (timing end) to	**12 N.m**
coolant circulation cover bolts	**12 N.m**
intercooler air inlet pipe clip	**5.5 N.m**

IMPORTANT
Wear latex gloves during the operation.

IMPORTANT
Wear protective gloves during the operation.

IMPORTANT
Wear heat protective gloves during the operation.

WARNING
Prepare for the flow of fluid, and protect the surrounding components.

REMOVAL

I - REMOVAL PREPARATION OPERATION

❑ Position the vehicle on a two-post lift (see **Vehicle: Towing and lifting**) (02A, Lifting equipment).

❑ Remove the engine covers.

❑ Disconnect the battery (see **Battery: Removal - Refitting**) (80A, Battery).

❑ Remove:

- the engine undertray bolts,
- the engine undertray,
- the windscreen wiper arms (see **Windscreen wiper arm: Removal - Refitting**) (85A, Wiping - Washing),
- the scuttle panel grille (see **Scuttle panel grille: Removal - Refitting**) (55A, Exterior protection).

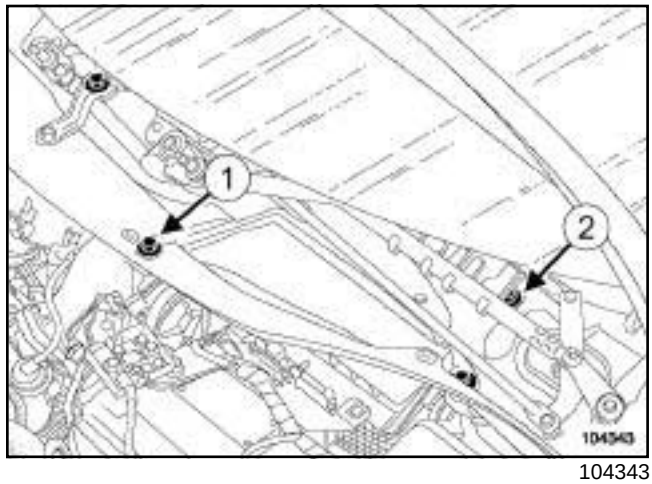

104343

❑ Remove:

- the air filter access panel bolts (**1**) ,
- the air filter access panel,
- the scuttle panel mounting bolt (**2**) .

K9K, and 724 or 732 or 734

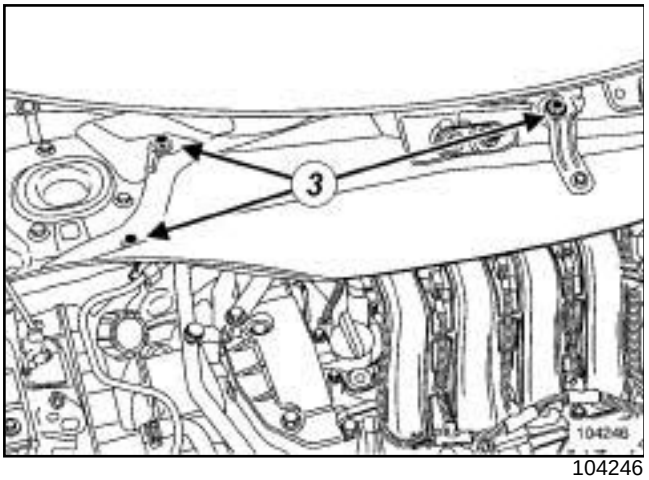

104246

❑ Remove:

- the scuttle panel partition bolts (**3**) ,
- the scuttle panel partition.

K9K, and 724

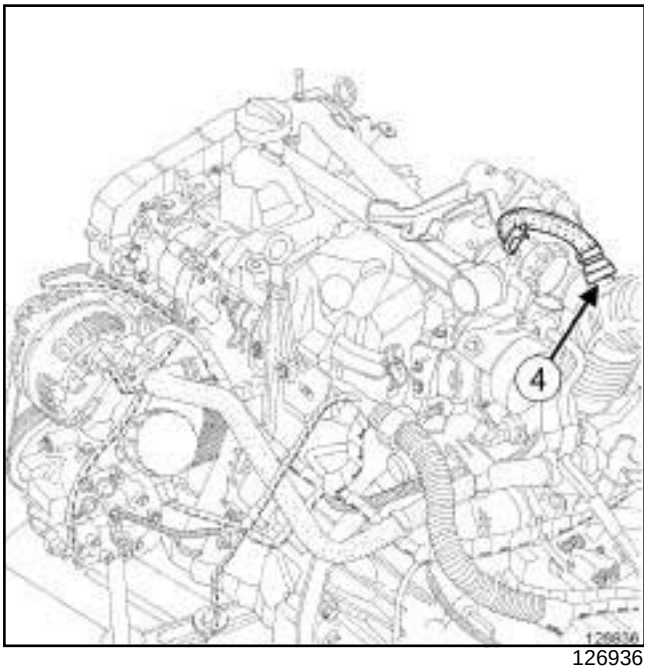

126936

❑ Disconnect the oil vapour rebreathing pipe (**4**) from the air filter unit air outlet pipe.

K9K, and 732 or 734

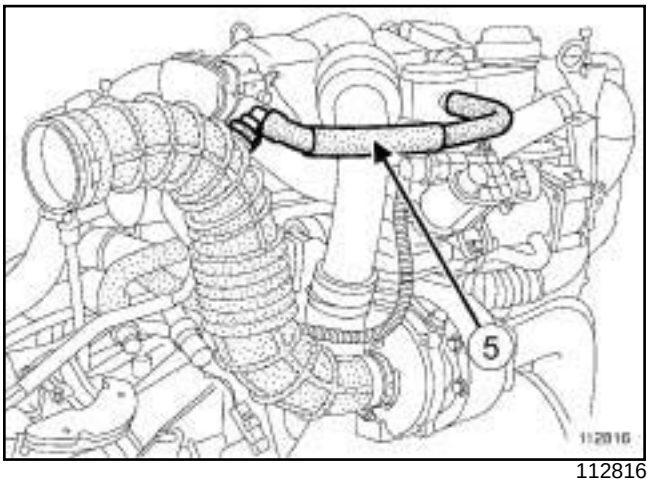

112816

❑ Disconnect the oil vapour rebreathing pipe (**5**) on the rocker cover side.

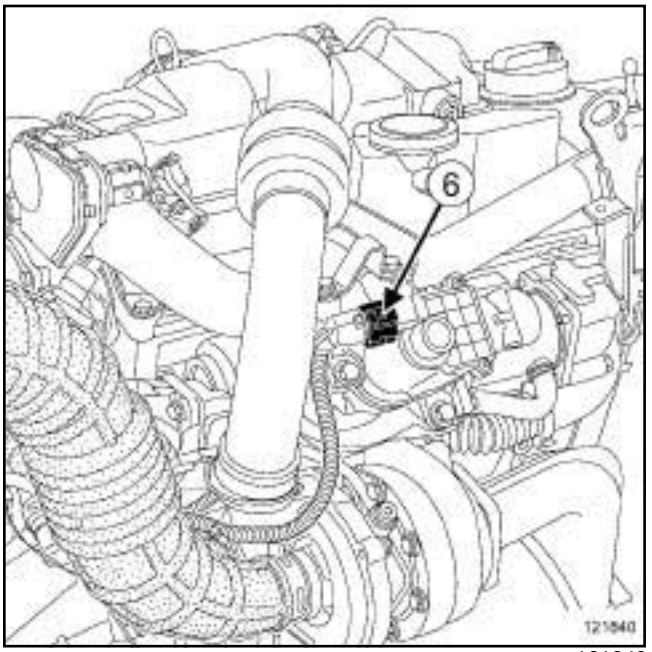

121840

❑ Disconnect the connector (**6**) from the exhaust gas recirculation solenoid valve.

K9K, and 724 or 732 or 734

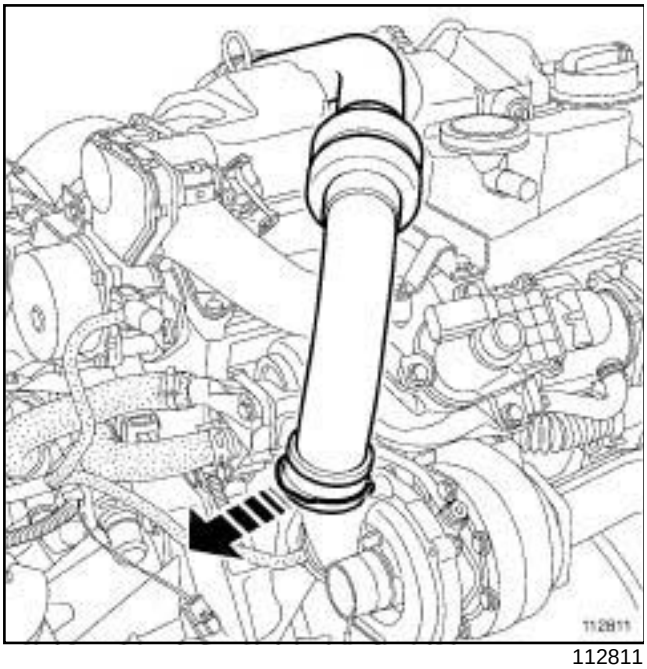

112811

❑ Pull the clip from the intercooler air inlet pipe.

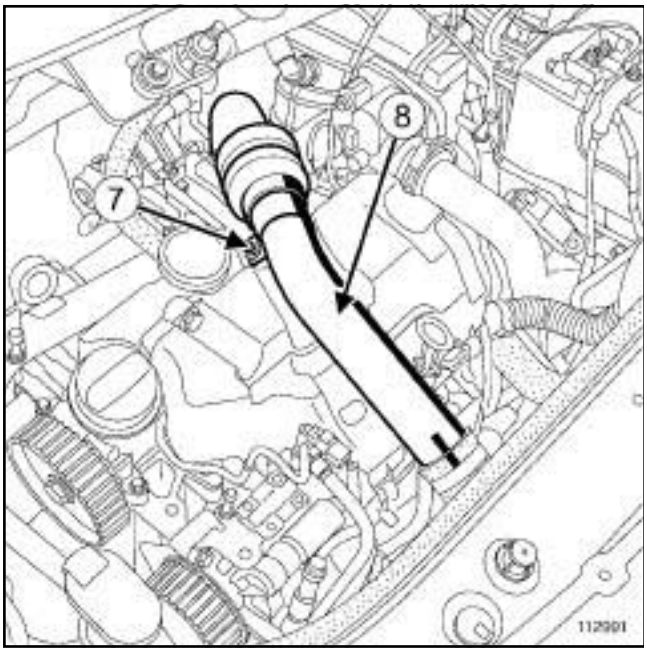

112991

❑ Remove the bolt (**7**) on the intercooler air inlet pipe.

❑ Move aside the intercooler air inlet pipe (**8**) .

K9K, and 732 or 734

❑ Remove the damper valve (see **12A**, **Fuel mixture**, **Air inlet flap: Removal - Refitting**, page **12A-33**) .

K9K, and 724

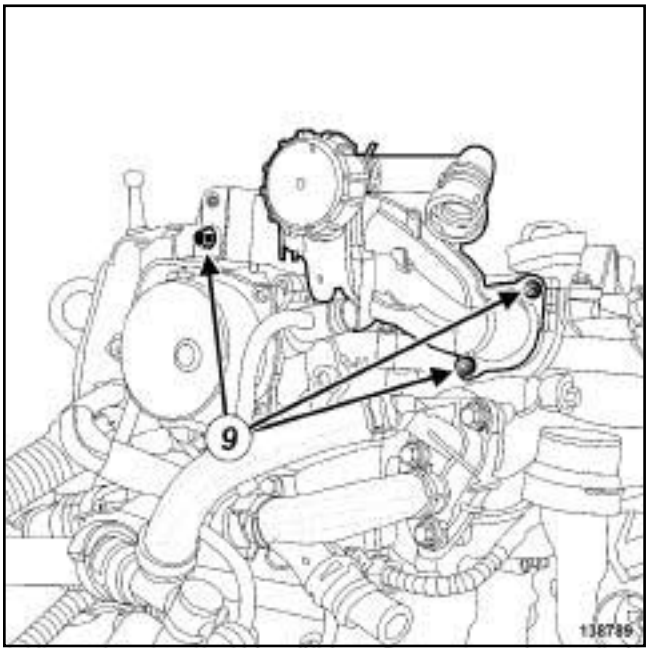

138789

❑ Remove:

- the bolts (**9**) from the oil vapour rebreathing valve,
- the oil vapour rebreathing valve,
- the seal of the oil vapour rebreathing valve.

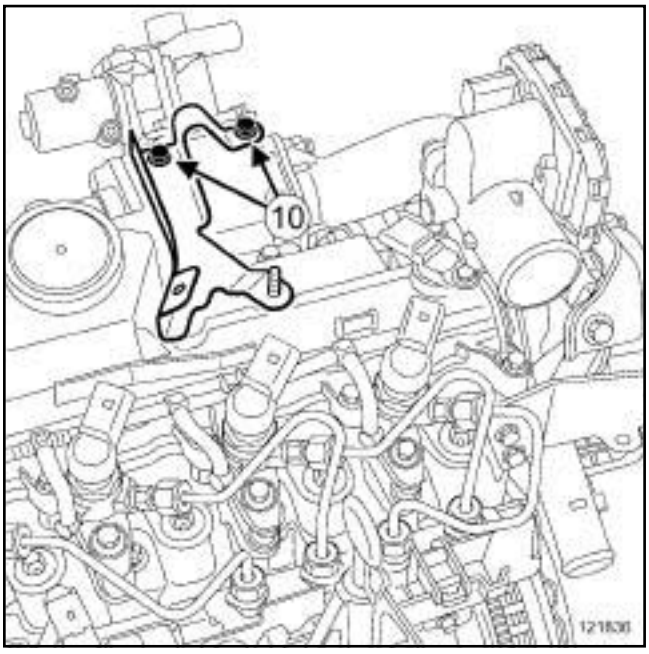

121836

❑ Remove the injector rail protector cover bracket bolts (**10**) .

K9K, and 724 or 732 or 734

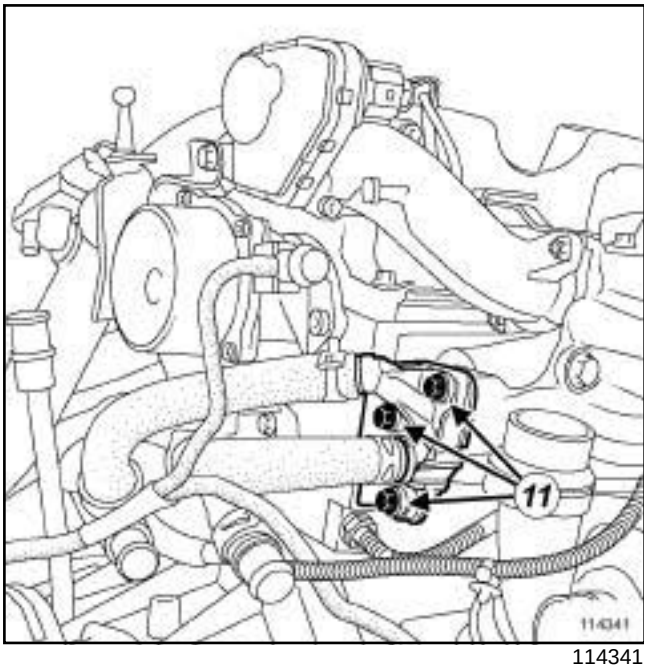

114341

- Position the tools **(Ms. 583)** on the coolant inlet and outlet pipes of the exhaust gas cooler.
- Remove the exhaust gas coolant circulation cover bolts (**11**) .
- Move the exhaust gas coolant circulation cover to one side.
- Remove the seals on the exhaust gas coolant circulation cover.

> Note:
>
> Be prepared for the escape of coolant.

K9K, and 724 or 732

- Remove the catalytic converter (see **19B**, **Exhaust**, **Catalytic converter: Removal - Refitting**, page **19B-46**) .

K9K, and 734

- Remove the catalytic pre-converter (see **19B**, **Exhaust**, **Catalytic pre-converter: Removal - Refitting**, page **19B-29**) .

II - OPERATION FOR REMOVAL OF PART CONCERNED

1 - First type of fitting of the exhaust gas recirculation assembly

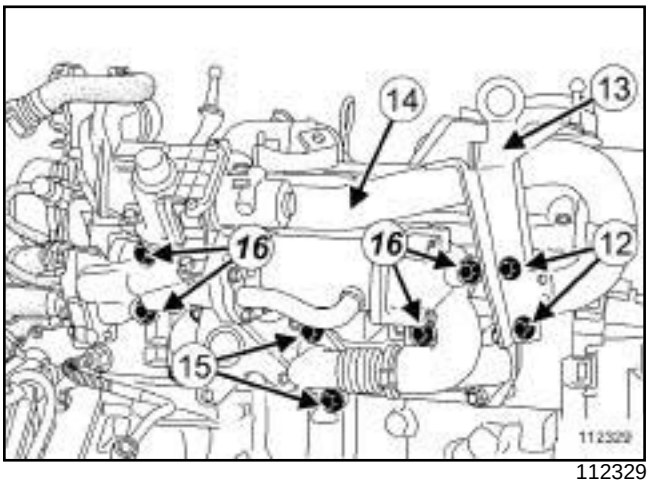

112329

- Remove:
  - the lifting bracket bolts (**12**) on the timing end,
  - the lifting bracket on the timing end (**13**) ,
  - the air inlet metal tube (**14**) ,
  - the bolts (**15**) from the EGR rigid pipe,
  - the exhaust gas recirculation unit assembly bolts (**16**) ,
  - the exhaust gas recirculation unit.

K9K, and 724 or 732 or 734

2 - Second type of fitting of the exhaust gas recirculation assembly

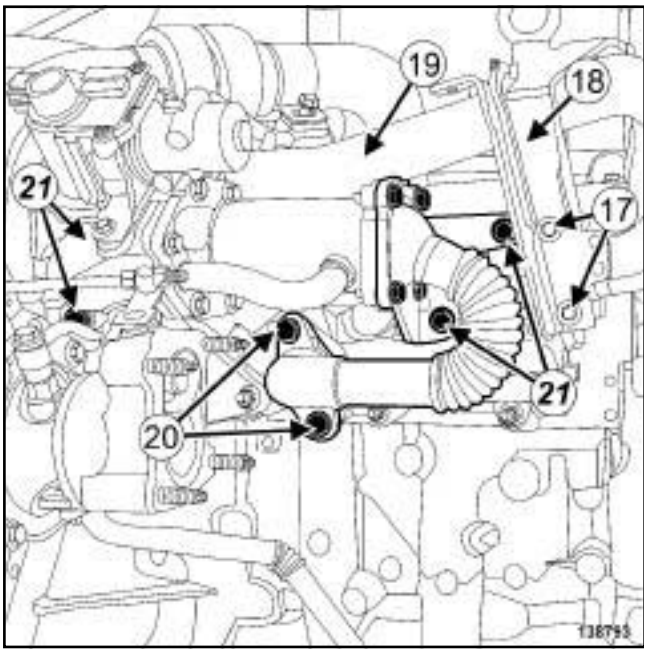

138793

❑ Remove:

- the lifting bracket bolts (**17**) on the timing end,
- the lifting bracket (**18**) on the timing end,
- the air inlet metal tube (**19**) ,
- the bolts (**20**) from the EGR rigid pipe,
- the exhaust gas recirculation unit assembly bolts (**21**) ,
- the exhaust gas recirculation unit.

REFITTING

I - REFITTING PREPARATION OPERATION

❑ Always replace the seals on the air inlet metal tube.

❑ **parts always to be replaced: Exhaust gas recirculation rigid pipe (11,07,01,08)**.

❑ **parts always to be replaced: exhaust gas recirculation pipe bolt (11,07,01,18)**.

❑ **parts always to be replaced: Exhaust gas recirculation pipe clip (11,07,01,14)**.

❑ Use **ABRASIVE PADS** (see **Vehicle: Parts and ingredients for the repairwork**) (04B, Consumables - Products) to clean the bearing faces:

- the turbocharger and the catalytic converter,
- the catalytic converter and the exhaust pipe,
- the exhaust gas recirculation solenoid valve and the exhaust gas recirculation unit,
- the coolant circulation cover within the exhaust gas cooler.

WARNING

Take care not to damage the bearing faces to prevent any risk of coolant leaks.

❑ Next, degrease these bearing faces using **SURFACE CLEANER** (see **Vehicle: Parts and ingredients for the repairwork**) (04B, Consumables - Products) and **CLEAN CLOTHS**.

WARNING

To ensure proper sealing, the gasket surfaces must be clean, dry and not greasy (avoid any finger marks).

K9K, and 724 or 732 or 734

Snap-on clip

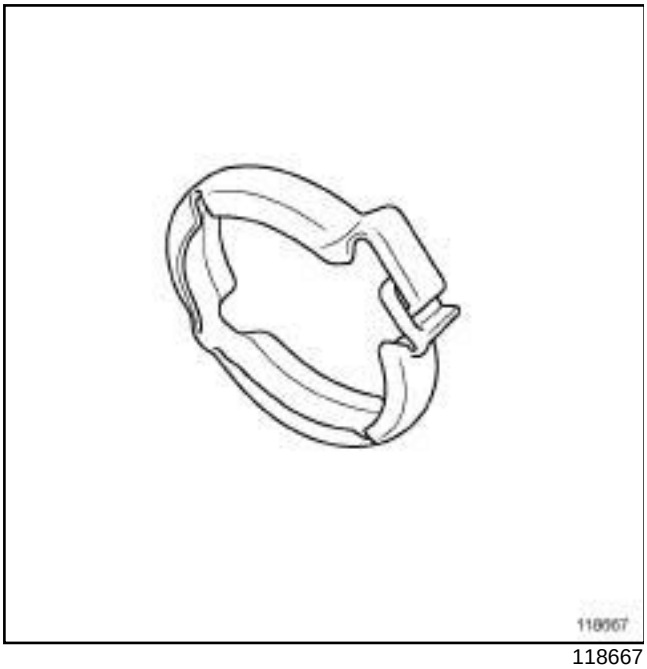

118667

Screw-in clip

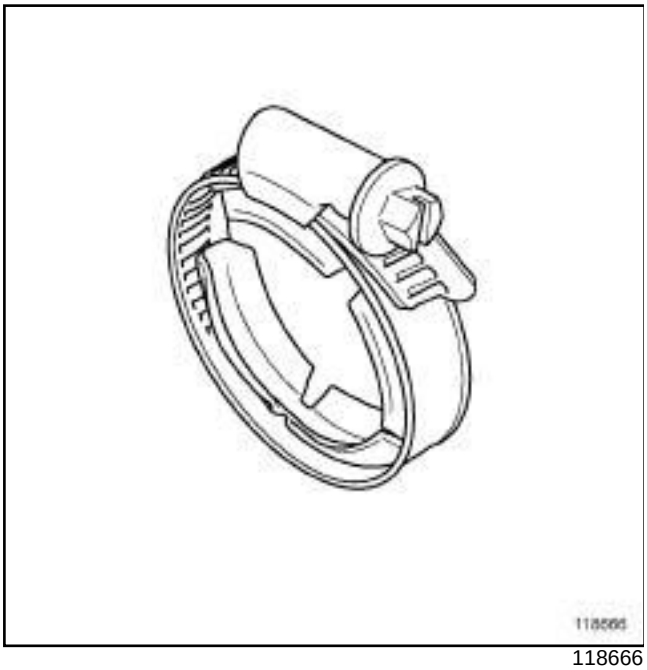

118666

❑

Note:

There are two types of clip fitted to the exhaust gas recirculation rigid pipe:

- snap-on clip,
- screw-in clip.

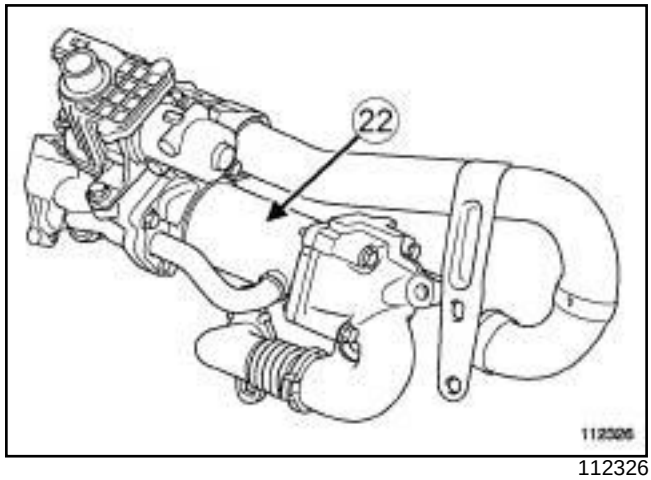

112326

❑ Remove the clip (**22**) from the exhaust gas recirculation rigid pipe using the tool **(Mot. 1567)** (snap-on clip) or with a screwdriver or ratchet fitted with a socket (screw-in clip).

K9K, and 724 or 732 or 734

II - REFITTING OPERATION FOR PART CONCERNED

1 - First type of fitting of the exhaust gas recirculation assembly

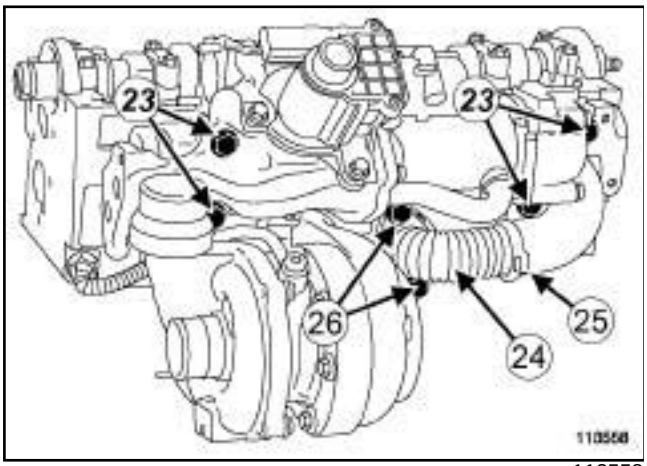

113558

❑ Refit:

- the « exchanger - EGR valve » assembly,
- the bolts (**23**) of the « exchanger - EGR valve » assembly.

❑ Torque tighten **the « EGR valve - exchanger » assembly (25 to 30 N.m)** (**26**) .

❑ Refit:

- a new exhaust gas recirculation pipe (**24**) equipped with a new clip (**25**) and a new seal,
- new bolts (**26**) on the exhaust gas recirculation pipe.

❑ Adjust the exhaust gas recirculation pipe in relation to the cooler support.

❑ Torque tighten:

- **the exhaust gas recirculation pipe clip (5 N.m)**,
- **the exhaust gas recirculation pipe bolts (35 N.m)** (**26**) .

K9K, and 724 or 732 or 734

2 - Second type of fitting of the exhaust gas recirculation assembly

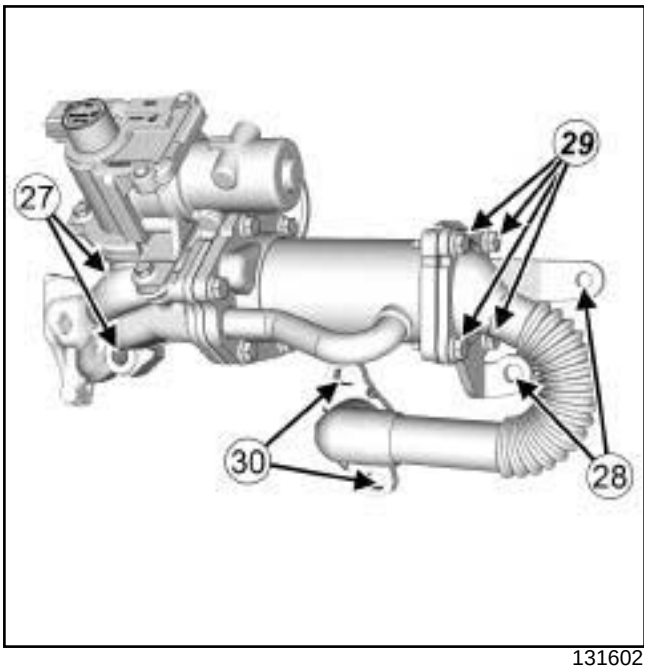

131602

❑ Refit:

- the « exchanger - EGR valve » assembly,
- the « EGR valve - exchanger » assembly bolts (**27**) and (**28**) .

❑ Adjust the position of the « exchanger - EGR valve » assembly in relation to the cylinder head.

❑ Screw on the bolts (**27**) and (**28**) without tightening.

❑ Remove:

- the bolts (**30**) of the rigid pipe on the cooler,
- the bolts (**28**) of the « exchanger - EGR valve » assembly,
- the rigid pipe and dispose of it in a waste bin,
- the seal of the rigid pipe and dispose of it in a waste bin,

❑ In order, fit (without tightening):

- the bolts (**30**) of the rigid pipe on the cooler,
- the bolts (**29**) of the « exchanger - EGR valve » assembly,
- the bolts (**30**) of the rigid pipe on the manifold.

❑ Tighten to torque and in order:

- the **bolts of the « exchanger - EGR valve» assembly (25 to 30 N.m)** (**27**) and (**28**) ,
- the **bolts of the rigid pipe on the manifold (35 N.m)** (**30**) ,
- the **bolts of the rigid pipe on the (cooler12 N.m)** (**29**) .

❑ Fit new seals to the air inlet duct.

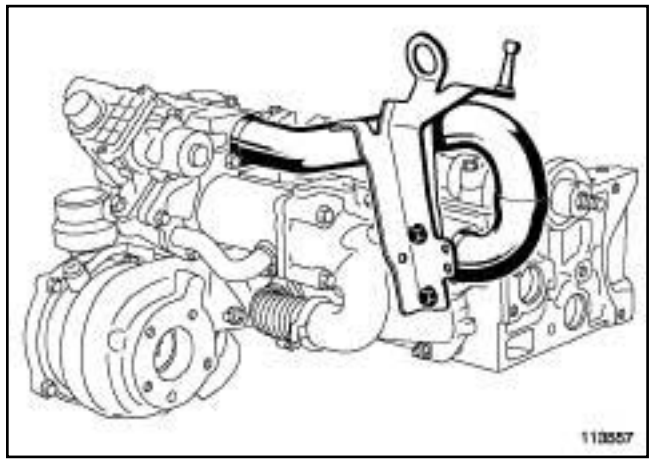

113557

❑ Refit:

- the inlet duct,
- the engine lifting eye (timing end).

❑ Torque tighten the **bolts of the engine lifting eye (timing end) to (12 N.m)** for M6 bolts or M8 bolts to **25 N.m**.

❑ Degrease the joint face receiving the vacuum pump and the cylinder head water chamber using **SURFACE CLEANER** (see **Vehicle: Parts and ingredients for the repairwork**) (04B, Consumables - Products).

III - FINAL OPERATION

K9K, and 734

❑ Refit the catalytic pre-converter (see **19B**, **Exhaust**, **Catalytic pre-converter: Removal - Refitting**, page **19B-29**) .

K9K, and 724 or 732

❑ Refit the catalytic converter (see **19B**, **Exhaust**, **Catalytic converter: Removal - Refitting**, page **19B-46**) .

❑ Fit the coolant circulation cover onto the exhaust gas recirculation unit assembly fitted with new seals.

❑ Torque tighten the **coolant circulation cover bolts (12 N.m)**.

K9K, and 724 or 732 or 734

- ❑ Remove the tools **(Ms. 583)** from the coolant inlet and outlet pipes of the exhaust gas cooler.
- ❑ Refit the bracket of the injector rail protector cover.

K9K, and 724

- ❑ Refit the oil vapour rebreathing valve.

K9K, and 732 or 734

- ❑ Refit the damper valve (see **12A**, **Fuel mixture**, **Air inlet flap: Removal - Refitting**, page **12A-33**) .

- ❑ Connect the turbocharger air outlet pipe to the intercooler air inlet pipe by aligning the marks.
- ❑ Clip the air outlet pipe of the turbocharger to the turbocharger.
- ❑ Refit the turbocharger air outlet pipe bolt.
- ❑ Torque tighten the **intercooler air inlet pipe clip (5.5 N.m)**.
- ❑ Connect:
  - exhaust gas recirculation solenoid valve connector ,
  - the oil vapour rebreathing pipe on the rocker cover.
- ❑ Refit:
  - the scuttle panel partition,
  - the scuttle panel partition bolts,
  - the scuttle panel mounting bolt,
  - the air filter access panel,
  - the air filter access panel bolts,
  - the scuttle panel grille (see **Scuttle panel grille: Removal - Refitting**) (55A, Exterior protection),
  - the windscreen wiper arms (see **Windscreen wiper arm: Removal - Refitting**) (85A, Wiping - Washing),
  - the engine undertray.
- ❑ Connect the battery (see **Battery : Removal - Refitting**) (80A, Battery).
- ❑ Fill and bleed the cooling system (see **19A**, **Cooling**, **Cooling circuit: Draining - Refilling**, page **19A-15**) .
- ❑ Using the **diagnostic tool** check that there are no stored faults; deal with these and clear them as necessary.

B84 or C84 or G84 or S84, and K9K, and 724

Essential special tooling	
Mot. 1448	Long nose pliers for hose clips.
Ms. 583	Hose clamp pliers.

Tightening torques ▽	
bolts of the exhaust gas recirculation assembly on the cylinder head	**25 N.m**
bolts of the exhaust gas recirculation rigid pipe bracket on the cylinder head	**25 N.m**
bolts of the exhaust gas recirculation rigid pipe on the exhaust manifold	**36 N.m**
bolts of the exhaust gas recirculation rigid pipe on the exhaust gas recirculation assembly	**12 N.m**
the engine lifting eye bolts (timing end)	**M6 bolts to 12 N.m or M8 bolts to 25 N.m**

IMPORTANT
Wear protective gloves during the operation.

REMOVAL

I - REMOVAL PREPARATION OPERATION

❑ Position the vehicle on a two-post lift (see **Vehicle: Towing and lifting**) (02A, Lifting equipment).

❑ Disconnect the battery (see **Battery: Removal - Refitting**) (80A, Battery).

❑ Remove the front engine cover.

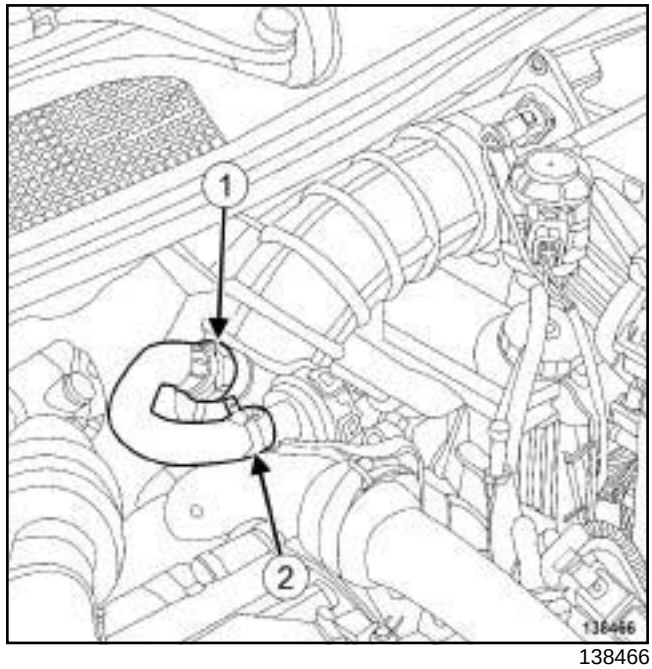

138466

❑ Disconnect the oil vapour rebreathing pipe from the air filter unit air outlet pipe at (**1**) .

❑ Remove the clip (**2**) of the oil vapour rebreathing pipe from the oil vapour rebreathing valve using the tool **(Mot. 1448)**.

❑ Disconnect the oil vapour rebreathing pipe from the oil vapour rebreathing valve.

❑ Remove the oil vapour rebreathing pipe.

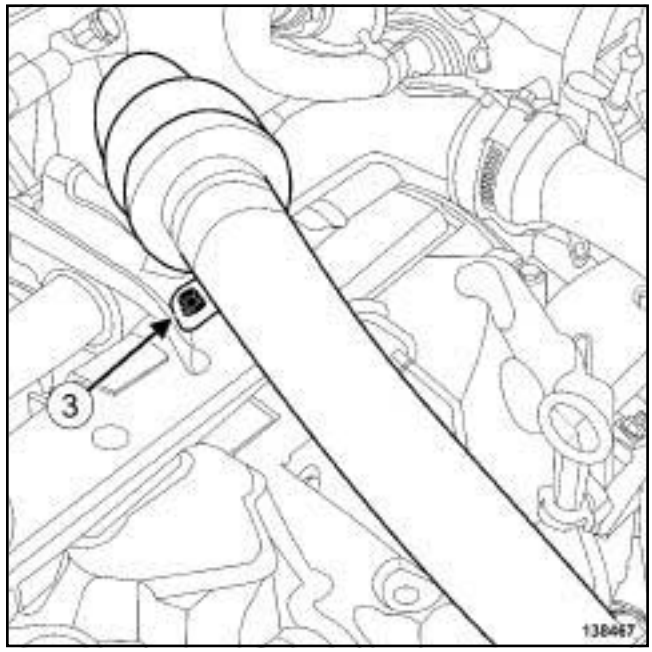

138467

❑ Remove the bolt (**3**) on the intercooler air inlet pipe.

B84 or C84 or G84 or S84, and K9K, and 724

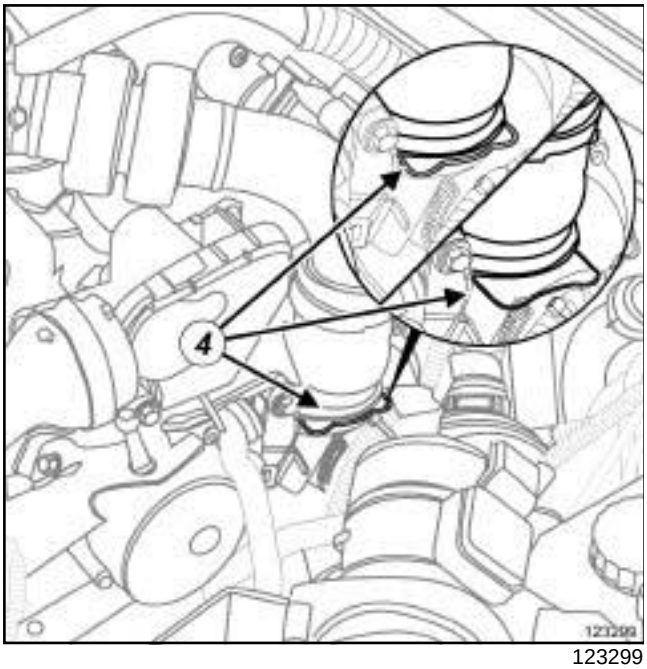

123299

- ❑ Pull the intercooler air inlet pipe clip (**4**) on the turbocharger side.
- ❑ Disconnect the intercooler air inlet pipe on the turbocharger side.
- ❑ Remove the intercooler inlet air pipe.

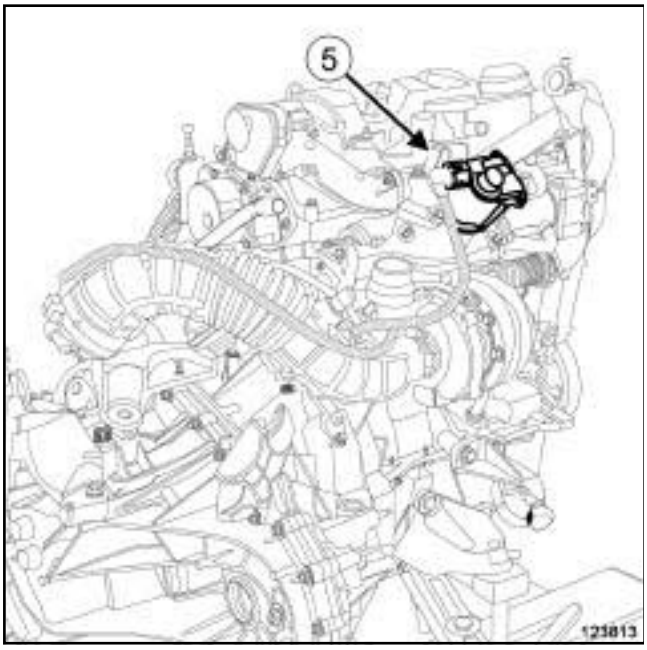

123813

- ❑ Disconnect the connector (**5**) from the exhaust gas recirculation solenoid valve.

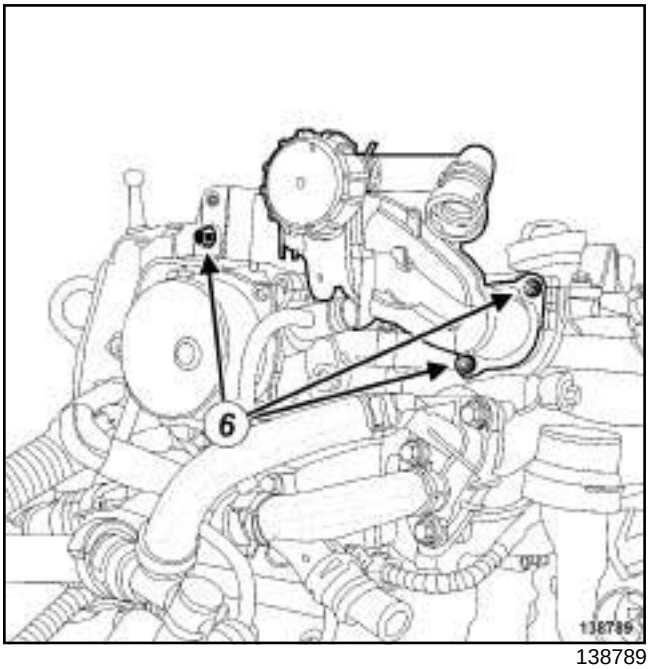

138789

- ❑ Remove:
  - the bolts (**6**) from the oil vapour rebreathing valve,
  - the oil vapour rebreathing valve.

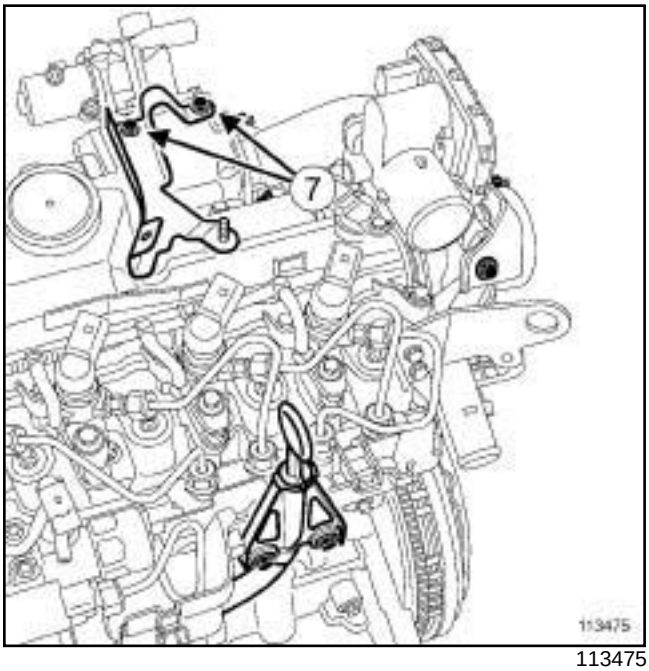

113475

- ❑ Remove:
  - the injector rail protector cover bracket bolts (**7**) ,
  - the bracket from the injector rail protector cover.

B84 or C84 or G84 or S84, and K9K, and 724

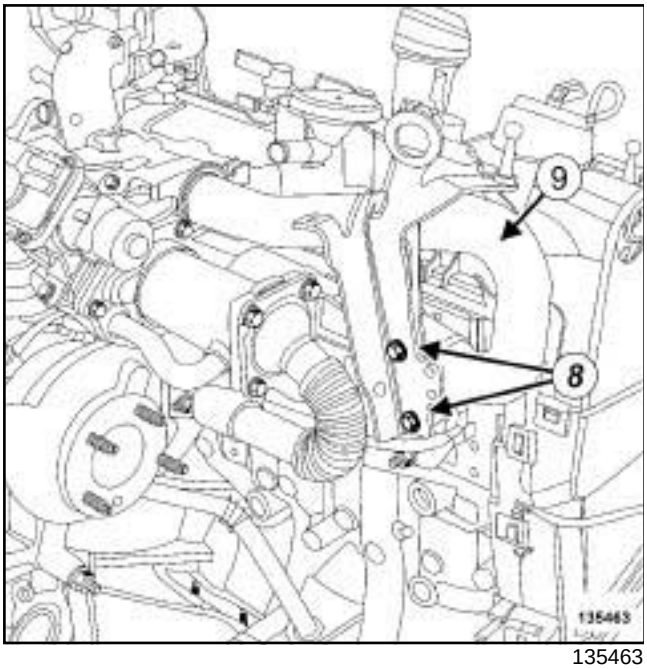

135463

❑ Remove:

- the bolts (**8**) from the "timing end lifting eye - air inlet metal tube" assembly,
- the lifting eye on the timing end,
- the air inlet metal tube (**9**) ,
- the engine undertray bolts,
- the engine undertray,
- the catalytic converter (see **19B**, **Exhaust**, **Catalytic converter: Removal - Refitting**, page **19B-46**) ,
- the rigid exhaust gas recirculation pipe (see **14A**, **Antipollution**, **Exhaust gas recirculation rigid pipe: Removal - Refitting**, page **14A-95**) .

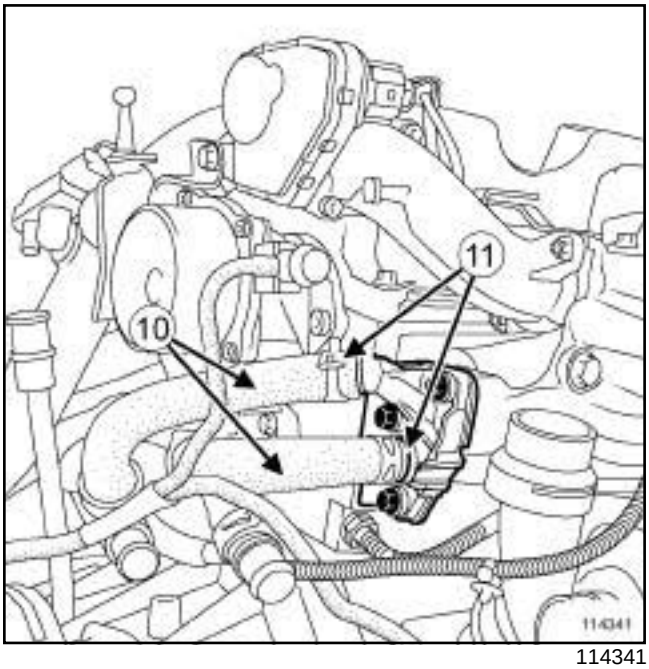

114341

❑ Fit the tool **(Ms. 583)** onto the hoses (**10**) of the exhaust gas cooler circuit cover.

❑ Remove the clips (**11**) from the exhaust gas cooler circuit cover hoses using the tool **(Mot. 1448)**.

WARNING

Prepare for the flow of fluid, and protect the surrounding components.

❑ Disconnect the hoses (**10**) from the cover of the exhaust gas cooler circuit.

B84 or C84 or G84 or S84, and K9K, and 724

II - OPERATION FOR REMOVAL OF PART CONCERNED

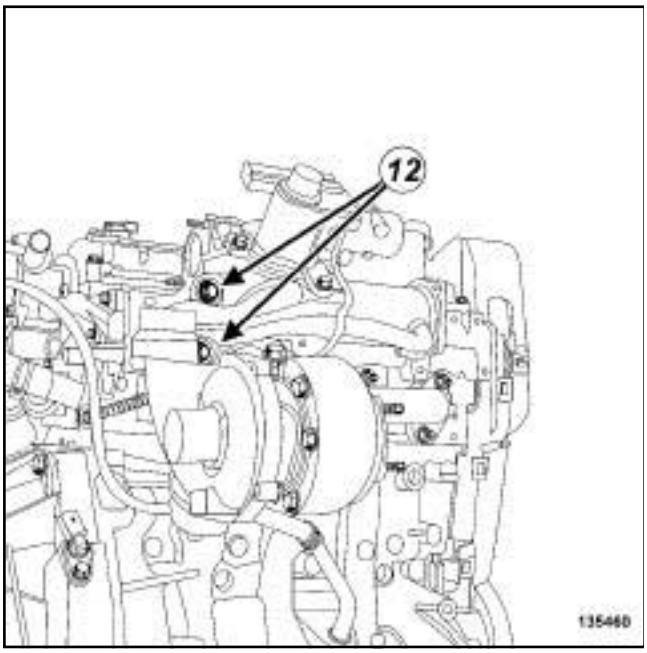

135460

❑ Remove:

- the bolts (**12**) from the exhaust gas recirculation assembly,
- the exhaust gas recirculation assembly.

REFITTING

I - REFITTING PREPARATION OPERATION

❑ Always replace the seals on the air inlet metal tube.

❑ Use **ABRASIVE PADS** to clean the joint faces of the exhaust gas cooler mounting on the gearbox end.

> **WARNING**
> Do not scrape the joint faces of the aluminium, any damage caused to the joint face will result in a risk of leaks.

❑ Use **SURFACE CLEANER** (see **Vehicle: Parts and consumables for repair**) (04B, Consumables - Products) to clean and degrease:

- the housing of each air inlet metal tube seal,
- the housing of the air inlet metal tube in the cylinder head,
- the housing of the air inlet metal tube in the exhaust gas cooler mounting on the gearbox end.

> **WARNING**
> To ensure proper sealing, the gasket surfaces must be clean, dry and not greasy (avoid any finger marks).

❑ **parts always to be replaced: Exhaust gas recirculation rigid pipe (11,07,01,08)**

❑ **parts always to be replaced: Exhaust gas recirculation pipe seal (11,07,01,15)**

II - REFITTING OPERATION FOR PART CONCERNED

❑ Fit the new exhaust gas recirculation rigid pipe with a new seal on the exhaust gas recirculation assembly.

❑ Refit the exhaust gas recirculation assembly equipped with the new exhaust gas recirculation rigid pipe on the cylinder head.

❑ Fit without tightening:

- the bolts of the exhaust gas recirculation assembly on the cylinder head,
- the bolts of the exhaust gas recirculation rigid pipe bracket on the cylinder head,
- the exhaust gas recirculation rigid pipe bolts on the exhaust manifold.

❑ Tighten to torque:

- the **bolts of the exhaust gas recirculation assembly on the cylinder head (25 N.m)**,
- the **bolts of the exhaust gas recirculation rigid pipe bracket on the cylinder head (25 N.m)**,
- the **bolts of the exhaust gas recirculation rigid pipe on the exhaust manifold (36 N.m)**,
- the **bolts of the exhaust gas recirculation rigid pipe on the exhaust gas recirculation assembly (12 N.m)**.

III - FINAL OPERATION

❑ Refit the air inlet metal tube.

B84 or C84 or G84 or S84, and K9K, and 724

- ❑ Connect the cooling hoses of the exhaust gas cooler cover.
- ❑ Fit the clips on the cooling hoses of the exhaust gas cooler cover using the tool **(Mot. 1448)**.
- ❑ Remove the **(Ms. 583)**.
- ❑ Refit:
  - the catalytic converter (see **19B**, **Exhaust**, **Catalytic converter: Removal - Refitting**, page **19B-46**) ,
  - the engine undertray,
  - the lifting eye on the timing end,
  - the bracket of the injector rail protector cover.
- ❑ Torque tighten **the engine lifting eye bolts (timing end) (M6 bolts to 12 N.m or M8 bolts to 25 N.m)**.
- ❑ Refit the oil vapour rebreathing valve.
- ❑ Connect the connector of the exhaust gas recirculation solenoid valve.
- ❑ Fit:
  - the intercooler air inlet pipe,
  - the clip on the intercooler inlet air pipe in its original position.
- ❑ Refit the oil vapour rebreathing pipe.
- ❑ Fit the clip of the oil vapour rebreathing pipe on the oil vapour rebreathing valve using the **(Mot. 1448)**.
- ❑ Refit the engine cover.
- ❑ Connect the battery (see **Battery: Removal - Refitting**) (80A, Battery).
- ❑ Fill and bleed the cooling system (see **19A**, **Cooling**, **Cooling circuit: Draining - Refilling**, page **19A-15**) .

B84 or C84 or G84 or S84, and K9K, and 732 or 734

Essential special tooling	
Mot. 1448	Long nose pliers for hose clips.

Tightening torques ▽	
exhaust gas recirculation assembly bolts	**25 to 30 N.m**
exhaust gas recirculation rigid pipe clip	**5 N.m**
exhaust gas recirculation rigid pipe bolts	**35 N.m**

REMOVAL

I - REMOVAL PREPARATION OPERATION

❑ Disconnect the battery (see **Battery: Removal - Refitting**) (80A, Battery).

❑ Remove the engine covers.

❑ Remove the oil vapour rebreathing pipe.

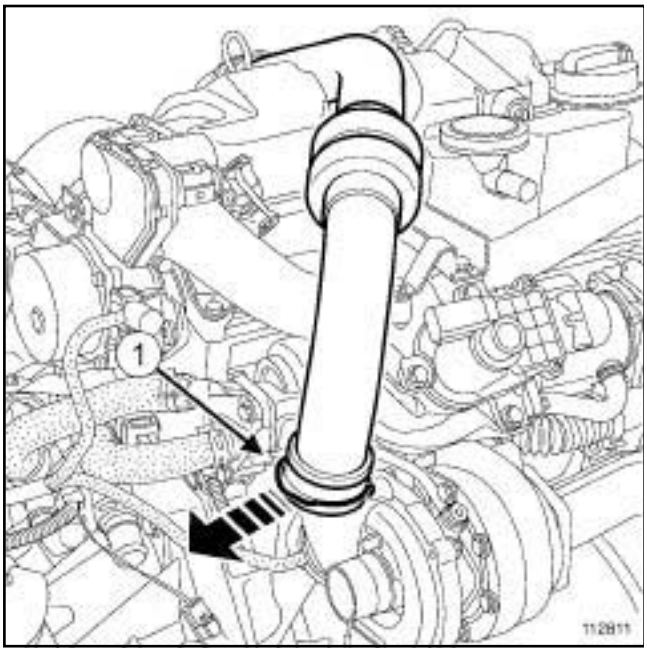

112811

❑ Pull out clip (**1**) .

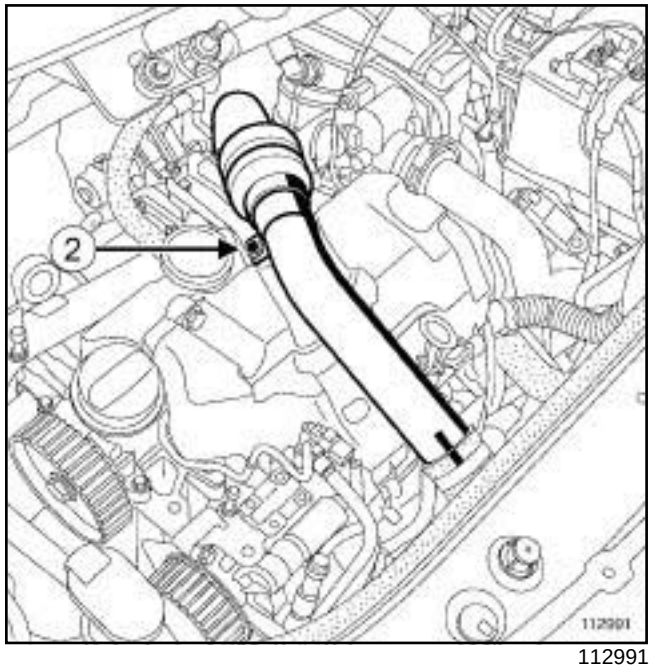

112991

❑ Remove the bolt (**2**) on the intercooler air inlet pipe.

❑ Remove the intercooler inlet air pipe.

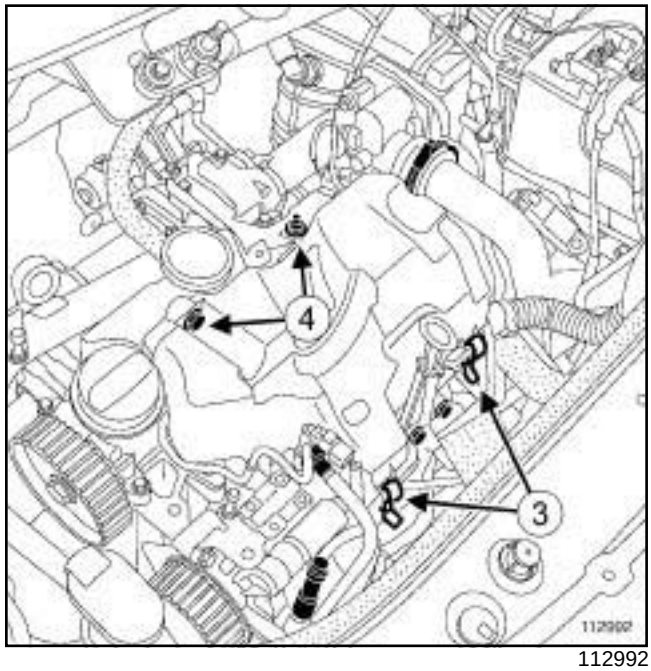

112992

❑ Unclip the injector rail protector cover (**3**) .

❑ Remove:

- the bolt and the nut (**4**) from the injector rail protector cover,
- the injector rail protector cover,

❑ Disconnect the exhaust gas recirculation solenoid valve connector.

B84 or C84 or G84 or S84, and K9K, and 732 or 734

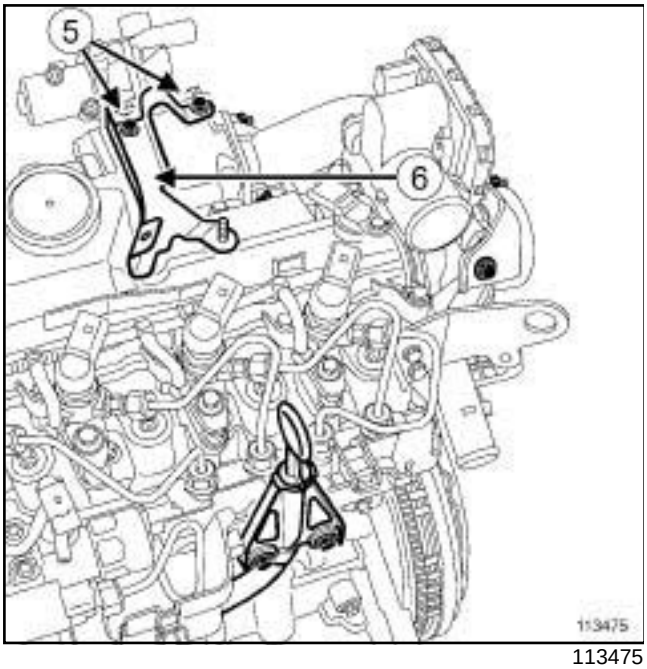

113475

❑ Remove:

- the injector rail protector cover bracket bolts (**5**) ,
- the bracket (**6**) from the injector rail protector cover.

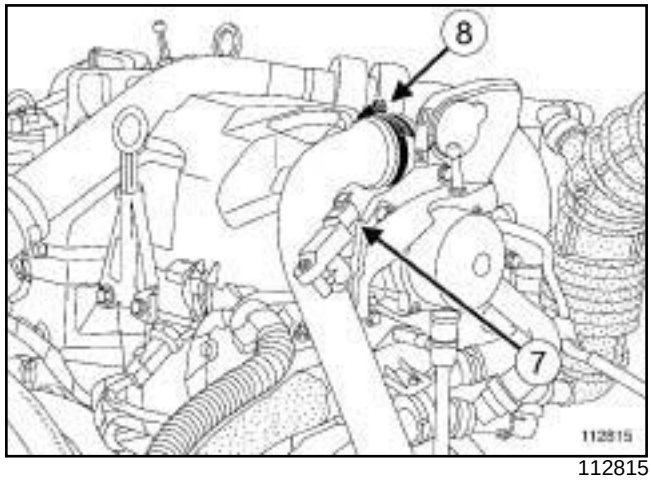

112815

❑ Disconnect the connector (**7**) from the turbocharging pressure sensor

❑ Loosen the clip (**8**) on the intercooler outlet air pipe.

❑ Move the intercooler outlet air pipe to one side.

❑ Remove:

- the damper valve (see **12A**, **Fuel mixture**, **Air inlet flap: Removal - Refitting**, page **12A-33**) ,
- the catalytic converter (see **19B**, **Exhaust**, **Catalytic converter: Removal - Refitting**, page **19B-46**) .

❑ Drain the cooling system (see **19A**, **Cooling**, **Cooling circuit: Draining - Refilling**, page **19A-15**) .

❑ Remove the clips from the hoses of the exhaust gas cooler using the tool **(Mot. 1448)**

❑ Disconnect the hoses from the exhaust gas cooler.

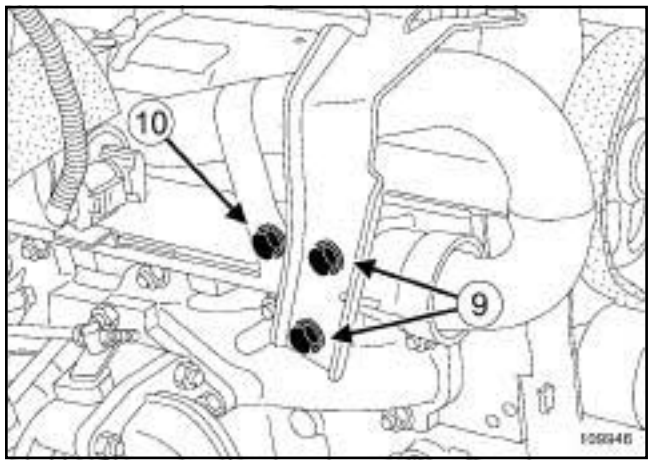

109946

❑ Remove:

- the lifting eye bolts (**9**) on the timing end,
- the lifting eye on the timing end,
- the bolt (**10**) from the air inlet metal tube,

B84 or C84 or G84 or S84, and K9K, and 732 or 734

- air inlet metal tube.

II - OPERATION FOR REMOVAL OF PART CONCERNED

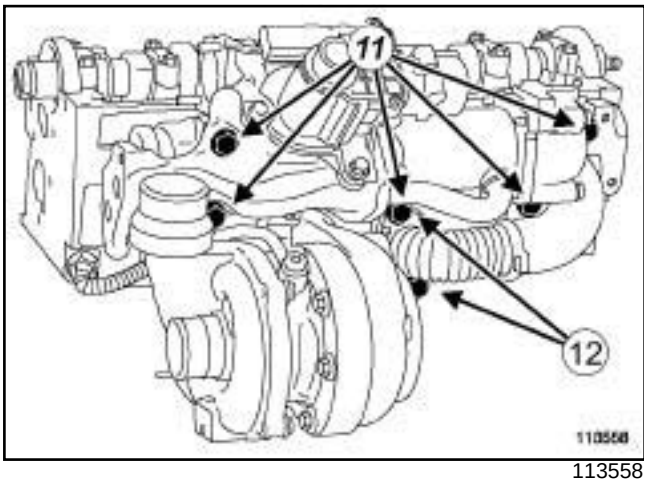

113558

❑ Remove:

- the bolts (**11**) from the exhaust gas recirculation assembly,
- the bolts (**12**) from the EGR rigid pipe,
- the exhaust gas recirculation assembly.

REFITTING

I - REFITTING PREPARATION OPERATION

❑ **parts always to be replaced: Exhaust gas recirculation rigid pipe (11,07,01,08)**

❑ **parts always to be replaced: Exhaust gas recirculation pipe clip (11,07,01,14)**

❑ **parts always to be replaced: Exhaust gas recirculation pipe seal (11,07,01,15)**

II - REFITTING OPERATION FOR PART CONCERNED

❑ Refit the exhaust gas recirculation assembly.

❑ Torque tighten the **exhaust gas recirculation assembly bolts (25 to 30 N.m)**.

❑ Refit:

- a rigid exhaust gas recirculation pipe with a new seal,
- a new clip to the exhaust gas recirculation rigid pipe.

❑ Adjust the exhaust gas recirculation rigid pipe in relation to the exhaust gas cooler support.

❑ Tighten to torque:

- the **exhaust gas recirculation rigid pipe clip (5 N.m)**,
- the **exhaust gas recirculation rigid pipe bolts (35 N.m)**.

❑ Refit the catalytic converter (see **19B**, **Exhaust**, **Catalytic converter: Removal - Refitting**, page **19B-46**) .

❑ Connect the cooling hoses to the exhaust gas recirculation assembly.

❑ Fit the cooling hose clips using the tool **(Mot. 1448)**.

❑ Refit:

- the air inlet metal tube,
- the lifting eye on the timing end,
- the damper valve (see **12A**, **Fuel mixture**, **Air inlet flap: Removal - Refitting**, page **12A-33**) ,
- the bracket of the injector rail protector cover.

❑ Fit the intercooler air outlet pipe.

❑ Tighten the clip on the intercooler outlet pipe.

❑ Connect the exhaust gas recirculation solenoid valve connector.

❑ Refit:

- the injector rail protector cover,
- the intercooler air inlet pipe,
- the bolt on the intercooler air inlet pipe,
- the oil vapour rebreathing pipe .

❑ Fill and bleed the cooling system (see **19A**, **Cooling**, **Cooling circuit: Draining - Refilling**, page **19A-15**) .

❑ Connect the battery (see **Battery : Removal - Refitting**) (80A, Battery).

❑ Refit the engine covers.

B84 or C84 or G84 or S84, and K9K, and 724 or 732 or 734

Essential special tooling	
Mot. 1567	Long nose pliers for EGR duct clips.

Tightening torques ▽	
EGR rigid pipe bolts	**36 N.m**
exhaust gas recirculation rigid pipe clip	**5 N.m**
bolts of the exhaust gas recirculation rigid pipe bracket on the cylinder head	**25 N.m**
bolts of the exhaust gas recirculation rigid pipe on the exhaust manifold	**36 N.m**
bolts of the exhaust gas recirculation rigid pipe on the exhaust gas recirculation assembly	**12 N.m**

REMOVAL

I - REMOVAL PREPARATION OPERATION

❑ Position the vehicle on a two-post lift (see **Vehicle: Towing and lifting**) (02A, Lifting equipment).

❑ Remove the engine covers.

❑ Disconnect the battery (see **Battery: Removal - Refitting**) (80A, Battery).

❑ Remove:

- the engine undertray bolts,
- the engine undertray,
- the catalytic converter (see **19B**, **Exhaust**, **Catalytic converter: Removal - Refitting**, page **19B-46**) (K9K*724, 732),
- the catalytic pre-converter (see **19B**, **Exhaust**, **Catalytic pre-converter: Removal - Refitting**, page **19B-29**) (K9K*734).

II - OPERATION FOR REMOVAL OF PART CONCERNED

1 - First fitting

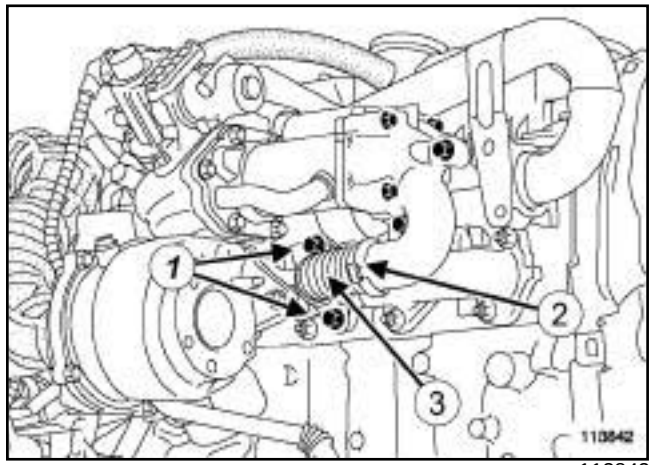

113842

❑ Remove:

- the exhaust gas recirculation rigid pipe bolts (**1**) ,
- the snap-on clip (**2**) of the exhaust gas recirculation rigid pipe using the tool **(Mot. 1567)**,
- the EGR rigid pipe.

2 - Second fitting

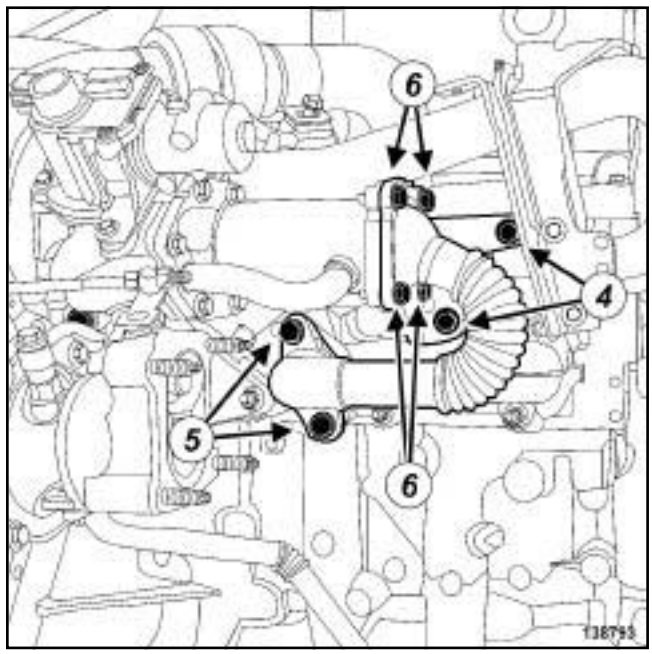

138793

❑ Remove:

- the bolts (**4**) of the exhaust gas recirculation rigid pipe bracket from the cylinder head,

B84 or C84 or G84 or S84, and K9K, and 724 or 732 or 734

- the bolts (**5**) of the exhaust gas recirculation rigid pipe from the exhaust manifold,
- the bolts (**6**) of the exhaust gas recirculation rigid pipe from the exhaust gas recirculation assembly,
- the exhaust gas recirculation rigid pipe,
- the exhaust gas recirculation pipe rigid seal.

REFITTING

I - REFITTING PREPARATION OPERATION

❑

> **WARNING**
> Do not scrape the joint faces of the aluminium, any damage caused to the joint face will result in a risk of leaks.

❑ Clean using **ABRASIVE PADS** :

- the joint face of the exhaust gas recirculation assembly,
- the exhaust manifold seal face.

❑ Use **SURFACE CLEANER** (see **Vehicle: Parts and consumables for repair**) (04B, Consumables - Products) and **CLEAN CLOTHS** to degrease:

- the exhaust manifold joint face,
- the joint face of the exhaust gas recirculation assembly.

❑

> **WARNING**
> To ensure proper sealing, the gasket surfaces must be clean, dry and not greasy (avoid any finger marks).

1 - First fitting

❑ **parts always to be replaced: Exhaust gas recirculation rigid pipe (11,07,01,08)**

❑ **parts always to be replaced: Exhaust gas recirculation pipe clip (11,07,01,14)**

❑ **parts always to be replaced: exhaust gas recirculation pipe bolt (11,07,01,18)**

2 - Second fitting

❑ **parts always to be replaced: Exhaust gas recirculation rigid pipe (11,07,01,08)**

❑ **parts always to be replaced: exhaust gas cooler seal (11,07,01,17)**

❑ **parts always to be replaced: exhaust gas recirculation pipe bolt (11,07,01,18)**

II - REFITTING OPERATION FOR PART CONCERNED

1 - First fitting

❑ Refit the new exhaust gas recirculation rigid pipe with a new seal and a new clip.

❑ Torque tighten:

- the **EGR rigid pipe bolts (36 N.m)**,
- the **exhaust gas recirculation rigid pipe clip (5 N.m)**.

2 - Second fitting

❑ Fit the new exhaust gas recirculation rigid pipe with a new seal.

❑ Fit without tightening:

- the bolts of the exhaust gas recirculation rigid pipe on the exhaust gas recirculation assembly,
- the bolts to the exhaust gas recirculation rigid pipe on the exhaust manifold,
- the bolts to the exhaust gas recirculation rigid pipe bracket on the cylinder head.

❑ Torque tighten:

- the **bolts of the exhaust gas recirculation rigid pipe bracket on the cylinder head (25 N.m)**,
- the **bolts of the exhaust gas recirculation rigid pipe on the exhaust manifold (36 N.m)**,
- the **bolts of the exhaust gas recirculation rigid pipe on the exhaust gas recirculation assembly (12 N.m)**.

III - FINAL OPERATION

❑ Refit:

- the catalytic converter (see **19B**, **Exhaust**, **Catalytic converter: Removal - Refitting**, page **19B-46**) (K9K*724, 732),
- the catalytic pre-converter (see **19B**, **Exhaust**, **Catalytic pre-converter: Removal - Refitting**, page **19B-29**) (K9K*734),
- the engine undertray.

❑ Connect the battery (see **Battery : Removal - Refitting**) (80A, Battery).

❑ Refit the engine covers.

B84 or C84 or E84 or K84 or L84, and M9R

Tightening torques ▽	
EGR rigid pipe bolts on the EGR cooler	**35 Nm**
EGR rigid pipe bolts on the exhaust manifold	**35 Nm**
EGR rigid pipe bolt on the cylinder head	**10 Nm**
EGR rigid pipe heat shield bolt on the cylinder head	**10 Nm**
EGR rigid pipe heat shield bolt on the exhaust manifold	**10 Nm**
air filter box air outlet pipe clips	**5.5 Nm**
EGR rigid pipe bolts on the EGR solenoid valve	**25 Nm**
EGR rigid pipe bolts on the EGR cooler	**25 Nm**
alternator positive terminal nut	**8 Nm**
intercooler outlet air pipe clips	**5.5 Nm**
turbocharging pressure sensor nut	**8 Nm**
front end panel lower bolts	**44 Nm**
front end panel upper bolts	**21 Nm**

IMPORTANT
Wear protective gloves during all operations.

REMOVING THE EGR RIGID PIPE BETWEEN THE EXHAUST MANIFOLD AND THE EGR COOLER

I - REMOVAL PREPARATION OPERATION

❑ Position the vehicle on a two-post lift (see **Vehicle: Towing and lifting**) (MR 364, 02A, Lifting equipment).

❑ Remove:

- the engine covers,
- the battery (see **Battery: Removal - Refitting**) (MR 364, 80A, Battery).

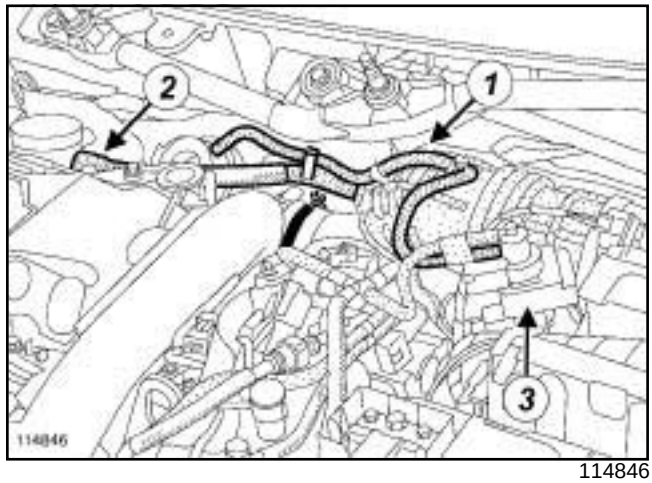

114846

❑ Disconnect:

- the hose (**1**) from the turbocharging pressure regulator on the air filter box air outlet pipe,
- the oil vapour rebreathing hose (**2**) from the oil decanter.

❑ Move aside the turbocharger pressure regulating solenoid valve (**3**) .

❑ Undo the clips on the air filter box outlet air pipe.

❑ Disconnect the air filter box outlet air pipe.

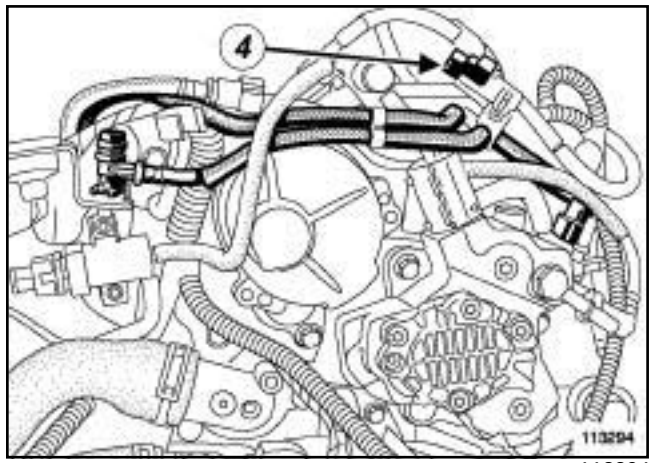

113294

❑ Disconnect the diesel temperature sensor connector (**4**) .

B84 or C84 or E84 or K84 or L84, and M9R

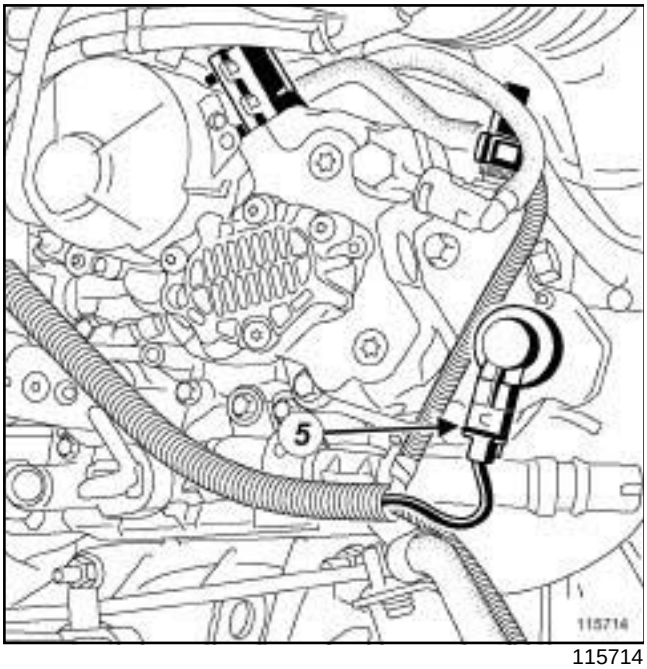

115714

- ❑ Disconnect the high pressure pump pressure regulator connector (**5**) .
- ❑ Detach the wiring harness from the high pressure pump pressure regulator and the diesel temperature sensor.

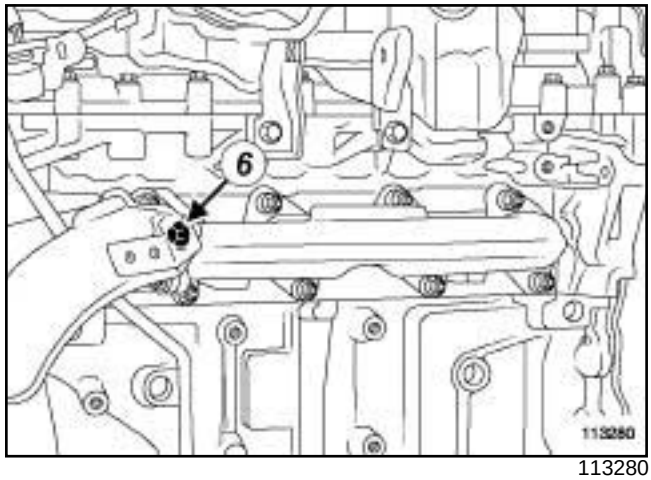

113280

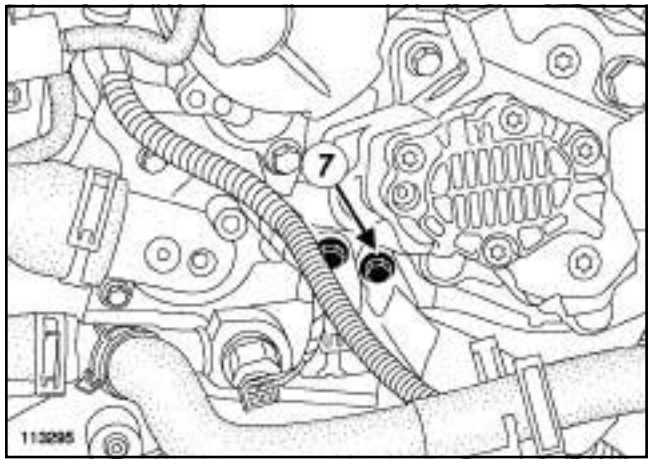

113295

- ❑ Remove:
  - the bolt (**6**) from the EGR rigid pipe heat shield on the exhaust manifold,
  - the bolt (**7**) from the EGR rigid pipe heat shield on the cylinder head.

B84 or C84 or E84 or K84 or L84, and M9R

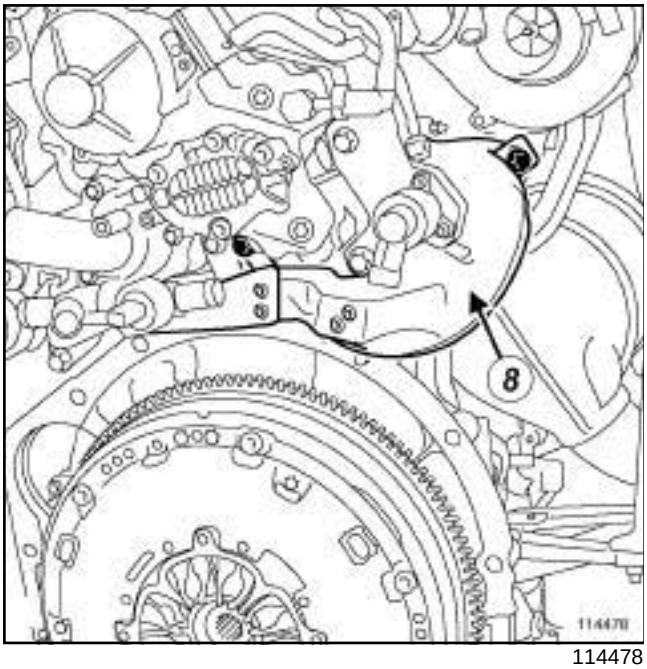

114478

❑ Remove the heat shield (**8**) from the EGR rigid pipe.

II - OPERATION FOR REMOVAL OF PART CONCERNED

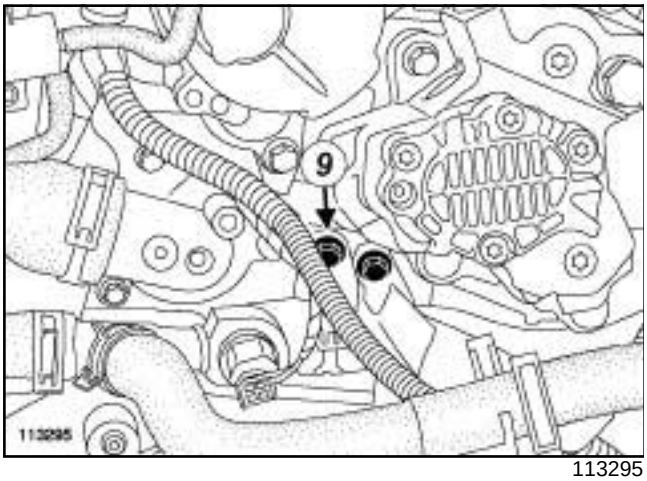

113295

❑ Remove the bolt (**9**) from the EGR rigid pipe on the cylinder head.

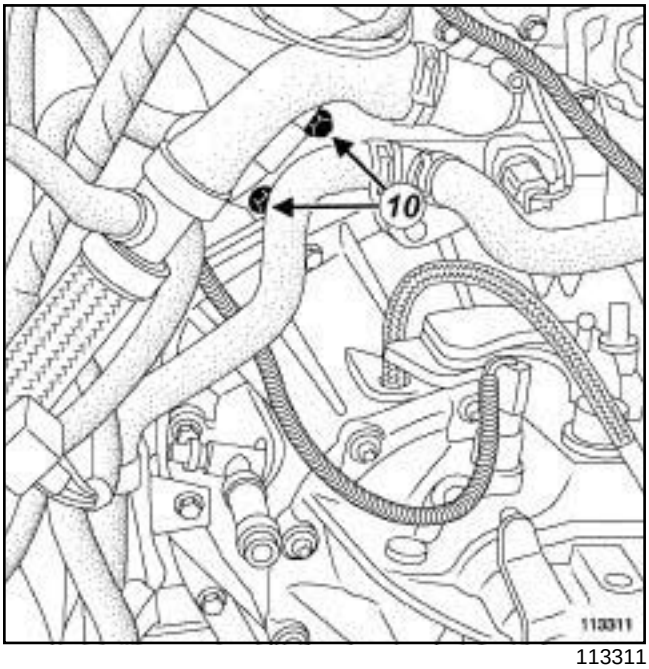

113311

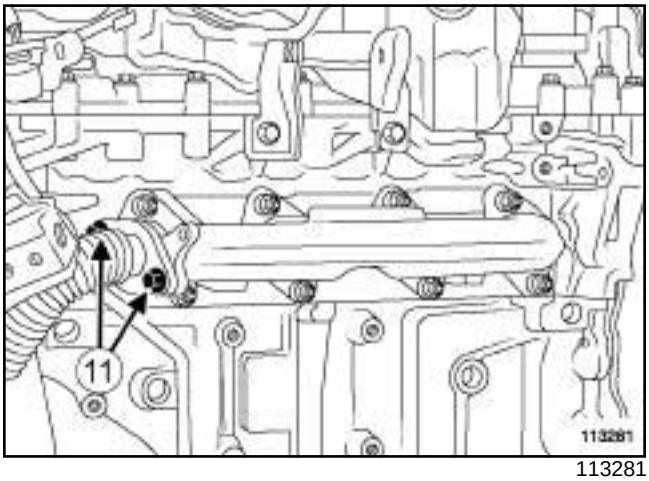

113281

❑ Remove the bolts (**10**) and (**11**) from the EGR rigid pipe by applying a maximum torque of **40 Nm** to avoid breaking the bolt.

Note:

If the bolt does not loosen:

-apply **RELEASING AGENT 77 11 420 439** to the bolt threads,

-wait 10 minutes,

-apply a maximum torque of 40 Nm until the bolt loosens.

B84 or C84 or E84 or K84 or L84, and M9R

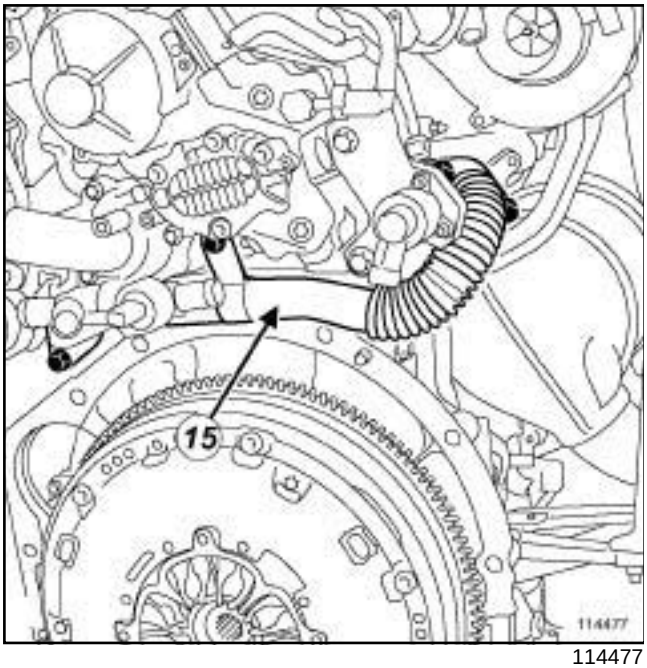

114477

❑ Remove

❑ Remove the EGR rigid pipe (**15**) between the exhaust manifold and the EGR cooler.

REMOVING THE EGR RIGID PIPE BETWEEN THE EGR SOLENOID VALVE AND THE EGR COOLER

I - REMOVAL PREPARATION OPERATION

❑ Position the vehicle on a two-post lift (see **Vehicle: Towing and lifting**) (MR 364, 02A, Lifting equipment).

❑ Remove the engine covers.

❑ Disconnect the battery (see **Battery: Removal - Refitting**) (MR 364, 80A, Battery).

❑ Remove:

- the engine undertray bolts,
- the engine undertray,
- the front bumper (see **Front bumper: Removal - Refitting**) (MR 365, 55A, Exterior protection).

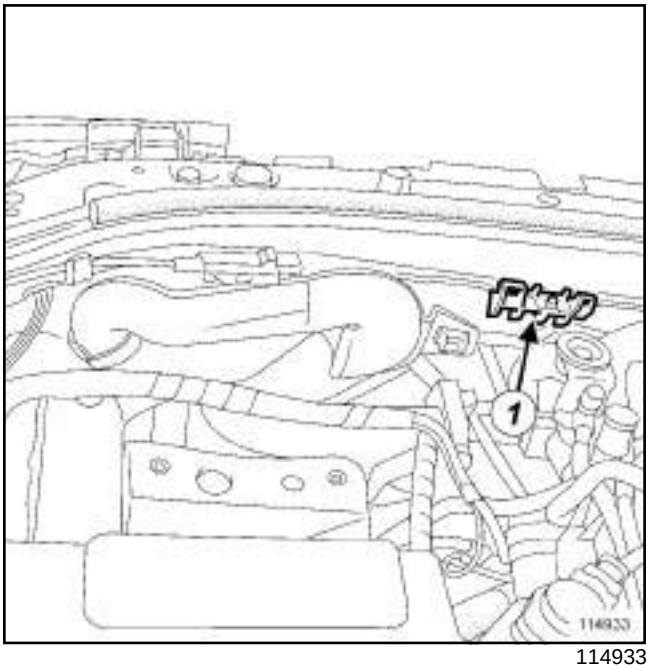

114933

❑ Unclip the air inlet scoop (**1**) .

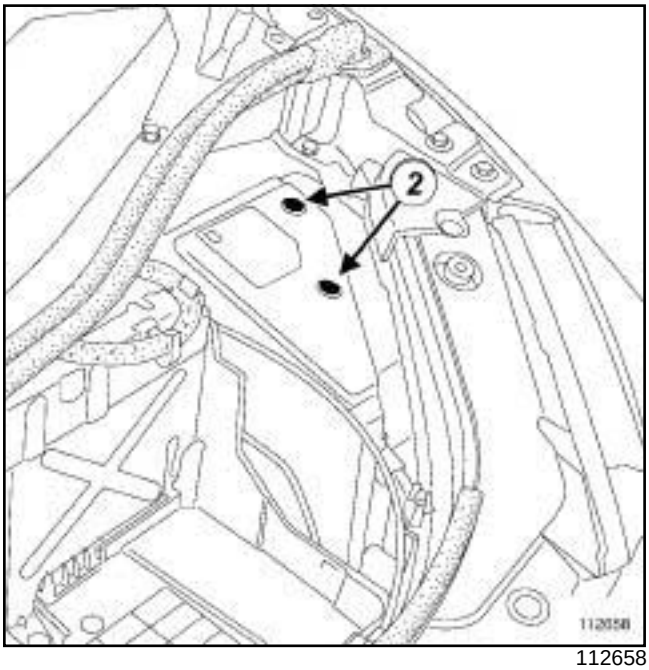

112658

❑ Remove:

- the engine accessories unit cover bolts (**2**) ,
- the engine accessories unit cover.

B84 or C84 or E84 or K84 or L84, and M9R

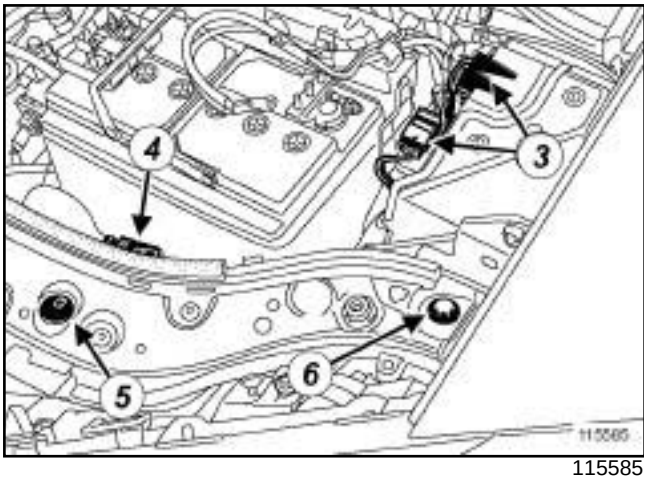

115585

- ❑ Disconnect the connectors (**3**) from the engine accessories unit.
- ❑ Unclip the bonnet opening cable (**4**) .
- ❑ Remove:
  - the front end panel clips (**5**) ,
  - the front end panel upper bolts (**6**) .
- ❑ Disconnect the screen washer pipes.

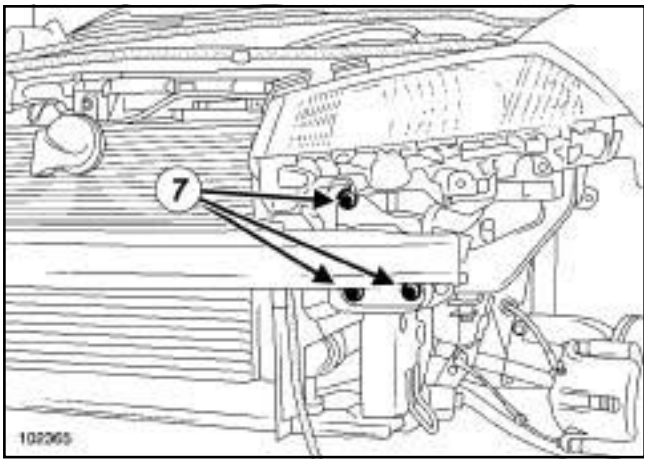

102365

- ❑ Remove:
  - the front end panel lower bolts (**7**) ,
  - the front end panel.

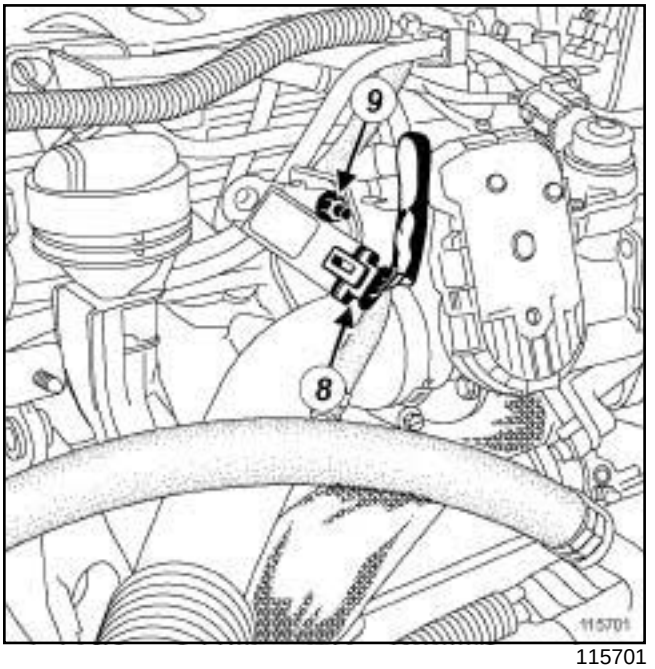

115701

- ❑ Disconnect the turbocharger pressure sensor connector (**8**) .
- ❑ Remove the nut (**9**) from the turbocharging pressure sensor.

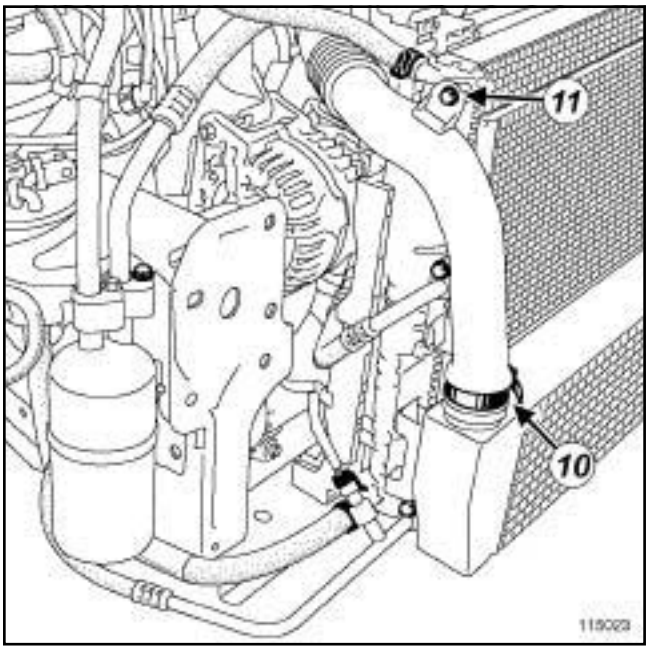

115023

- ❑ Remove the bolt (**10**) from the intercooler outlet air pipe on the cooling radiator.
- ❑ Undo the intercooler outlet air pipe clip (**11**) on the intercooler end.

B84 or C84 or E84 or K84 or L84, and M9R

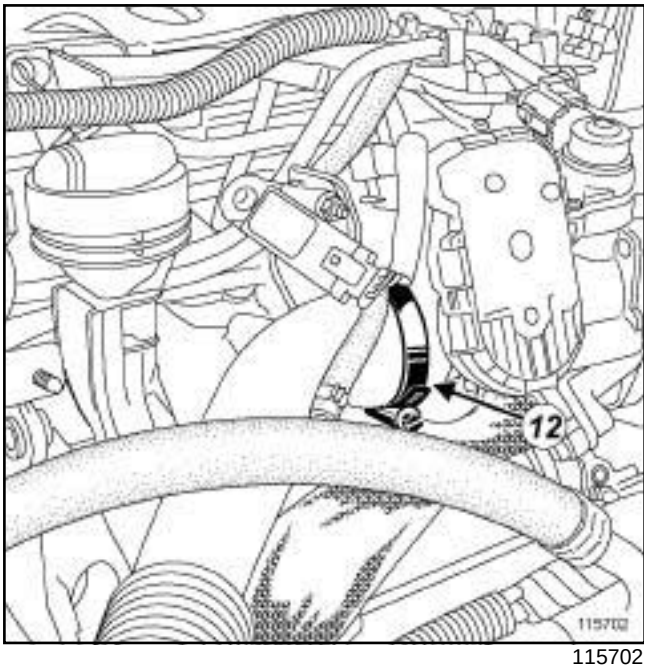

115702

❑ Undo the intercooler air outlet pipe clip (**12**) on the damper valve end.

❑ Disconnect the intercooler outlet air pipe.

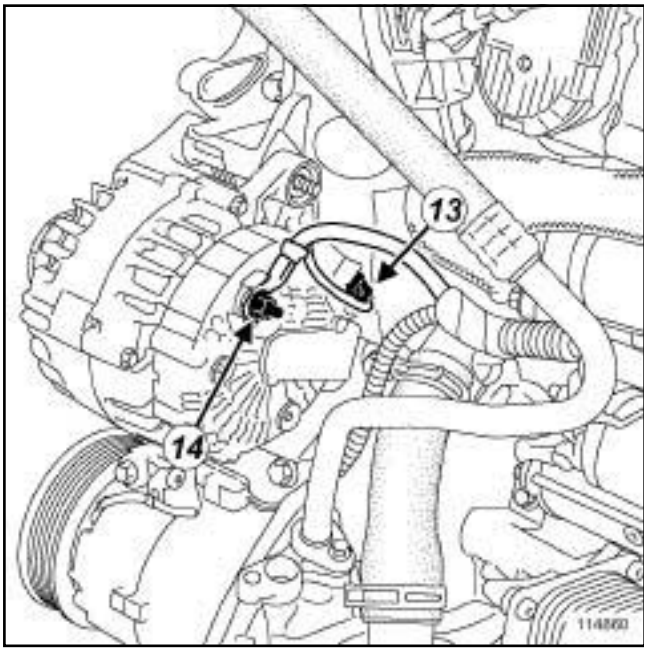

114860

❑ Disconnect the alternator connector (**13**) .

❑ Remove the nut from the alternator positive terminal (**14**) .

II - OPERATION FOR REMOVAL OF PART CONCERNED

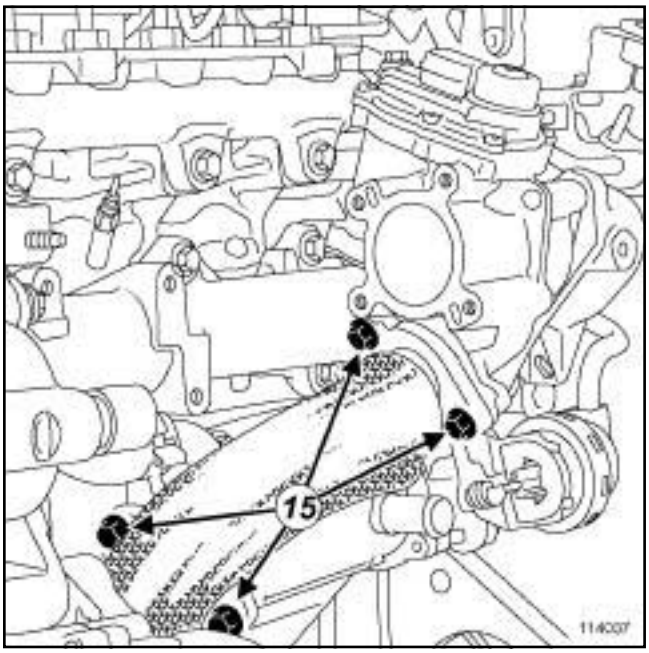

114037

❑ Remove the bolts (**15**) from the EGR rigid pipe by applying a maximum torque of **40 Nm** to avoid breaking the bolt.

> Note:
>
> If the bolt does not loosen:
>
> -apply **RELEASING AGENT 77 11 420 439** to the bolt threads,
>
> -wait 10 minutes,
>
> -apply a maximum torque of 40 Nm until the bolt loosens.

REFITTING THE EGR RIGID PIPE BETWEEN THE EXHAUST MANIFOLD AND THE EGR COOLER

I - REFITTING PREPARATIONS OPERATION

❑ Remove the EGR rigid pipe seals.

B84 or C84 or E84 or K84 or L84, and M9R

❏ Clean:

- the EGR rigid pipe seal faces if reusing,
- the EGR cooler seal face,
- the exhaust manifold seal face.

WARNING
The joint faces must be clean, dry and free from grease (avoid finger marks).

II - REFITTING OPERATION FOR PART CONCERNED

❏ Refit the EGR rigid pipe with new seals.

❏ Without tightening, fit:

- the new EGR rigid pipe bolts on the exhaust manifold,
- the new EGR rigid pipe bolts on the EGR cooler,
- the EGR rigid pipe bolt on the cylinder head.

❏ Torque tighten:

- the **EGR rigid pipe bolts on the EGR cooler (35 Nm)**,
- the **EGR rigid pipe bolts on the exhaust manifold (35 Nm)**,
- the **EGR rigid pipe bolt on the cylinder head (10 Nm)**.

III - FINAL OPERATION.

❏ Refit the EGR rigid pipe heat shield.

❏ Without tightening, fit:

- the EGR rigid pipe heat shield bolt on the cylinder head,
- the EGR rigid pipe heat shield bolt on the exhaust manifold.

❏ Torque tighten:

- the **EGR rigid pipe heat shield bolt on the cylinder head (10 Nm)**,
- the **EGR rigid pipe heat shield bolt on the exhaust manifold (10 Nm)**.

❏ Connect:

- the high pressure pump pressure regulator connector,
- the diesel fuel temperature sensor connector.

❏ Clip the wiring harness on the high pressure pump pressure regulator and the diesel temperature sensor.

❏ Connect the air filter box outlet air pipe.

❏ Torque tighten the **air filter box air outlet pipe clips (5.5 Nm)**.

❏ Connect:

- the oil vapour rebreathing hose onto the oil separator.
- the turbocharging pressure regulator hose on the air filter box outlet air pipe.

❏ Position the turbocharger pressure regulating solenoid valve.

❏ Refit:

- the battery (see **Battery : Removal - Refitting**) (MR 364, 80A, Battery),
- the engine covers.

REFITTING THE EGR RIGID PIPE BETWEEN THE EGR SOLENOID VALVE AND THE EGR COOLER

I - REFITTING PREPARATIONS OPERATION

❏ Remove the EGR rigid pipe seals.

❏ Clean:

- the EGR rigid pipe seal faces if reusing,
- the EGR cooler seal face,
- the EGR solenoid valve seal face.

WARNING
The joint faces must be clean, dry and free from grease (avoid finger marks).

II - REFITTING OPERATION FOR PART CONCERNED

❏ Refit the EGR rigid pipe with new seals.

❏ Without tightening, fit:

- the new EGR rigid pipe bolts to the EGR solenoid valve,
- the new EGR rigid pipe bolts on the EGR cooler.

❏ Torque tighten:

- the **EGR rigid pipe bolts on the EGR solenoid valve (25 Nm)**,
- the **EGR rigid pipe bolts on the EGR cooler (25 Nm)**.

B84 or C84 or E84 or K84 or L84, and M9R

III - FINAL OPERATION.

- ❑ Refit the alternator positive terminal nut.
- ❑ Torque tighten the **alternator positive terminal nut (8 Nm)**.
- ❑ Connect:
  - the alternator connector,
  - the intercooler outlet air pipe.
- ❑ Torque tighten the **intercooler outlet air pipe clips (5.5 Nm)**.
- ❑ Refit the intercooler outlet air pipe bolt on the cooling radiator.
- ❑ Refit the turbocharging pressure sensor nut.
- ❑ Torque tighten the **turbocharging pressure sensor nut (8 Nm)**.
- ❑ Connect the turbocharger pressure sensor connector.
- ❑ Refit:
  - the front end panel,
  - the front end panel upper bolts,
  - the front end panel lower bolts.
- ❑ Torque tighten:
  - the **front end panel lower bolts (44 Nm)**,
  - the **front end panel upper bolts (21 Nm)**.
- ❑ Clip on the air inlet scoop.
- ❑ Connect the screen washer pipes.
- ❑ Refit the front end panel clips.
- ❑ Fit the bonnet opening cable.
- ❑ Connect the engine accessories unit connectors.
- ❑ Refit:
  - the engine accessories unit cover,
  - the engine accessories unit cover bolts,
  - the front bumper (see **Front bumper: Removal - Refitting**) (MR 365, 55A, Exterior protection),
  - the engine undertray,
  - the engine undertray bolts.
- ❑ Connect the battery (see **Battery : Removal - Refitting**) (MR 364, 80A, Battery).
- ❑ Refit the engine covers.
- ❑ Adjust the headlights (see **Halogen headlight: Adjustment**) (MR 364, 80B, Headlights) or (see **Xenon headlights: Adjustment**) (MR 364, 80C, Xenon bulbs).

Exhaust gas recirculation solenoid valve: Cleaning

B84 or C84 or G84 or S84, and F9Q, and 800

Essential special tooling	
Mot. 1729	Pin wrench for removing the EGR valve.
Mot. 1757	EGR solenoid valve actuator.

Procedure to follow in the case of a clogged EGR solenoid valve.

I - DESCRIPTION OF THE EGR SOLENOID VALVE

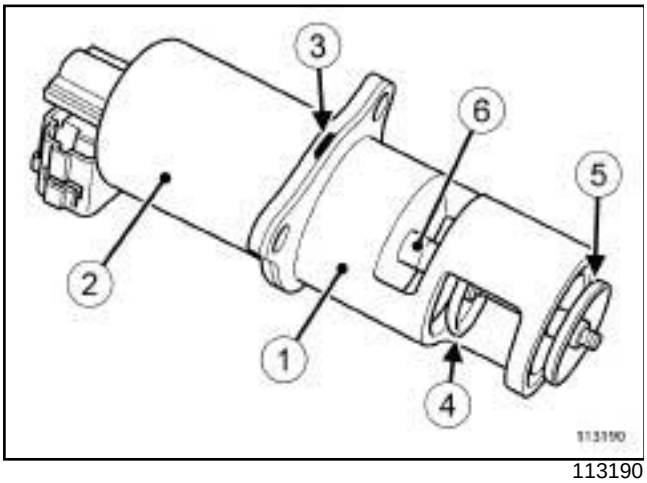

113190

(**1**)	Mechanical part of the solenoid valve
(**2**)	Electrical part of the solenoid valve
(**3**)	Vent hole
(**4**)	Lower valve
(**5**)	Upper valve
(**6**)	Valve shaft guide

❑ The EGR solenoid valve is shown above in the active position: solenoid valve open.

II - CLEANING THE EGR SOLENOID VALVE

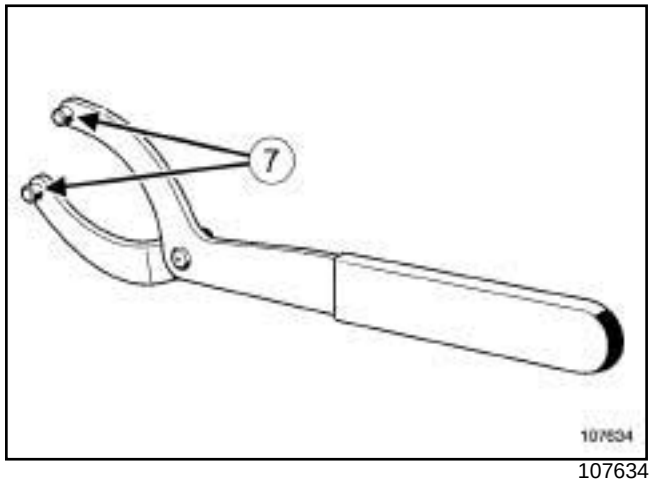

107634

❑ Remove the EGR solenoid valve using the **(Mot. 1729)** (see **14A**, **Antipollution**, **Exhaust gas recirculation solenoid valve: Removal - Refitting**, page **14A-23**) :

- position the lugs (**7**) of the **(Mot. 1729)** in the EGR solenoid valve holes,
- take care to fully drive home the lugs (**7**) ,
- turn the tool in small stages to detach the EGR solenoid valve from its housing.

❑ Clean the EGR solenoid valve (mechanical part only) using a cleaning jet.

> Note:
>
> The EGR solenoid valve (mechanical part only) may also be cleaned using **CARBURETTOR CLEANER** (part no.: **77 11 361 177**).

Exhaust gas recirculation solenoid valve: Cleaning

B84 or C84 or G84 or S84, and F9Q, and 800

STAGE 1

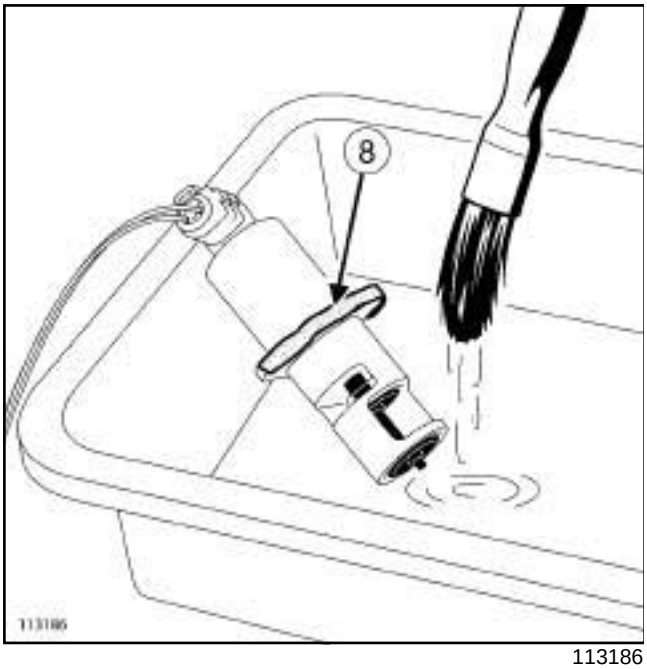

113186

❑ Protect the vent holes ***(3)*** of the EGR solenoid valve using adhesive tape (**8**) .

> **WARNING**
>
> Failure to observe the following procedure can lead to the destruction of the EGR solenoid valve.

❑ Wet the EGR solenoid valve liberally with cleaning product and brush at the same time for **1 min**, while ensuring that you:

- do not wet the electrical part of the EGR solenoid valve with the cleaning product,
- keep the EGR solenoid valve tilted with the connector at the top,
- use only brushes with non-scratch metal bristles (brass).

> Note:
>
> Cleaning using hard or corrosive tools (e.g.: screwdriver) can damage the valves or their shafts, and lead to:
>
> - a leak from the valves leading to power loss,
> - loss of the upper valve, leading to destruction of the engine.

STEP 2

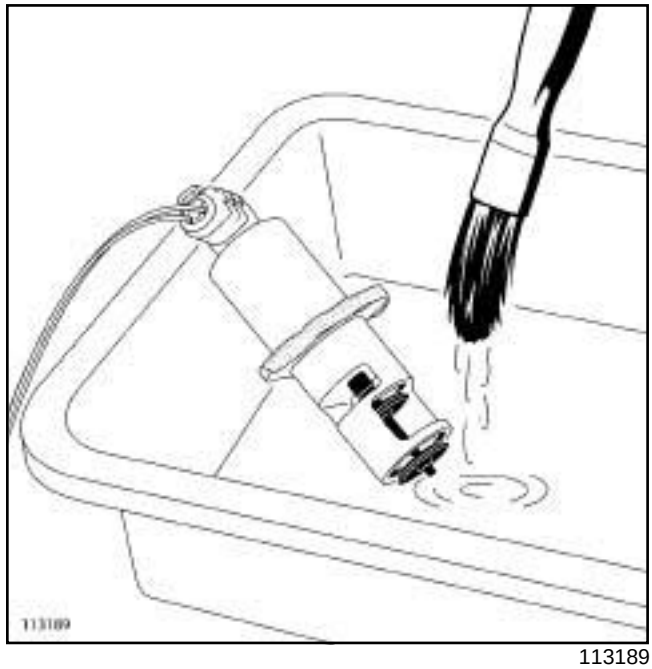

113189

❑ Open the solenoid valve using the tool **(Mot. 1757)** (see **EGR solenoid valve switch: Use**) .

❑ Clean the mechanical part of the solenoid valve by simultaneously scrubbing and drenching with cleaning product for **2 minutes**, paying attention to:

- the valve seats,
- the mating faces of the valves,
- the shaft guide of the valves.

B84 or C84 or G84 or S84, and F9Q, and 800

STEP 3

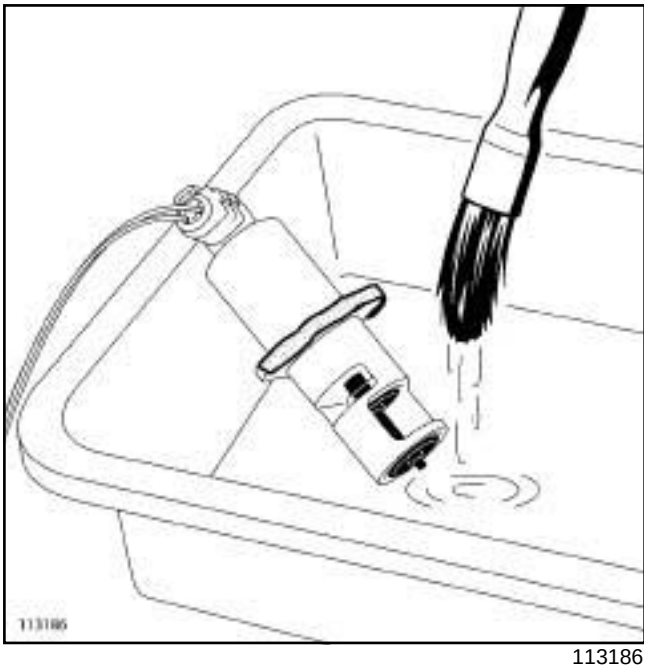

113186

- ❑ Run the EGR solenoid valve opening/closing cycle using the **(Mot. 1757)** (see **EGR solenoid valve switch: Use**) .
- ❑ During the cycle clean the mechanical part of the solenoid valve by simultaneously scrubbing and drenching with cleaning product, paying attention to:
  - the valve seats,
  - the mating faces of the valves,
  - the shaft guide of the valves.

STEP 4

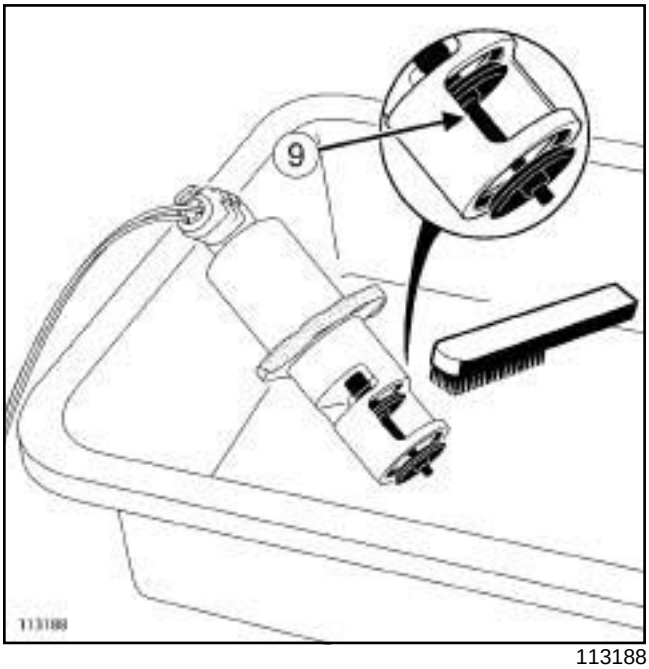

113188

- ❑ After the opening/closing cycle, open the solenoid valve using the tool **(Mot. 1757)**.
- ❑ Scrub the upper valve over its entire surface and circumference.

> **WARNING**
> Only use brushes with plastic or non-corrosive metal (brass) bristles.

- ❑ Scrub the lower valve around its entire circumference:
  - scrub the area of the lower valve accessible through the window (**9**) ,
  - pick up the upper valve by hand (do not use the tool), and turn it **1/4** turn,
  - scrub the area of the lower valve accessible through the window (**9**) ,
  - continue until the valve has been cleaned over its entire circumference.
- ❑ Repeat **STEP 3** twice in succession.
- ❑ Check there are no bristles from the brush in the EGR solenoid valve.

B84 or C84 or G84 or S84, and F9Q, and 800

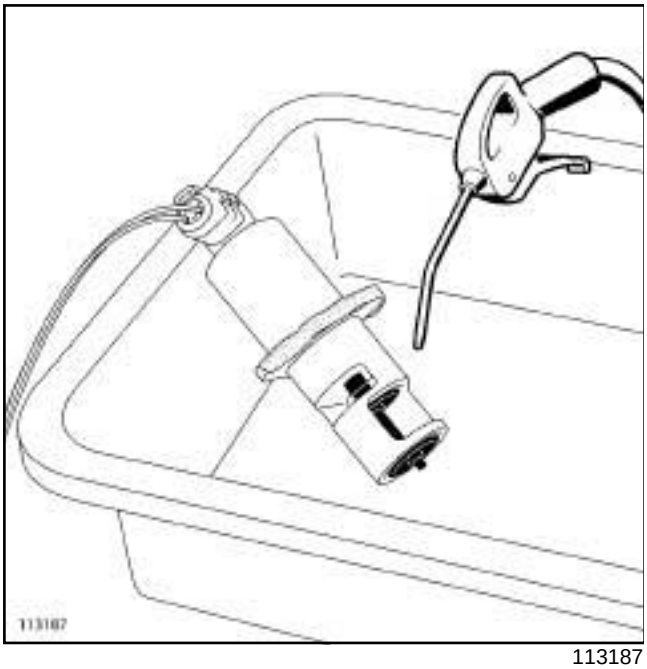

113187

- Open the solenoid valve using the tool **(Mot. 1757)**.
- Use a compressed air gun to blow out the solenoid valve.
- Refit the EGR solenoid valve (see **14A**, **Antipollution**, **Exhaust gas recirculation solenoid valve: Removal - Refitting**, page **14A-23**) .
- After cleaning the EGR solenoid valve, follow the programming procedure carried out when replacing the EGR solenoid valve (see **Fault finding - Replacement of components**)(MR 366, 13B, Diesel injection).

I - OPERATION

These vehicles are fitted with an alternator with internal ventilation and built-in regulator, plus a warning light on the instrument panel, which operates as follows:

- when the ignition is switched on, the warning light comes on,
- when the engine starts, the warning light goes out,
- if the warning light comes on while the engine is running, this indicates a « charging » fault.

II - IDENTIFICATION

Engine	Alternator	Current strength
K4J and K4M	**VALEO : TG11 C011**	**110A**
	VALEO : TG11 C027	
	BOSCH : LIE8 0 124 525 028	**150 A**
F4R	**VALEO : TG11 C040**	**110A**
	VALEO : TG11 C049	
	VALEO : SG12 B092	**125A**
	VALEO : SG12 B098	
K9K	**VALEO : TG11 C041**	**110A**
	VALEO : TG11 C034	
	BOSCH : LIE8 0 124 525 081	**150 A**
	BOSCH : LIE8 0 124 525 082	
	BOSCH : LIE8 0 124 525 139	
	MELCO : 8GM A004 TJ0 581	**210 A**
	MELCO : 8GM A004 TJ0 582	
	MELCO : 8GM A004 TJ0 481	
F9Q	**VALEO : TG11 C010**	**110A**
	VALEO : TG11 C040	
	VALEO : TG11 C049	
	VALEO : SG12 B109	**125A**
	VALEO : SG12 B052	
	VALEO : SG12 B081	
	VALEO : SG15 B092	
	VALEO : SG15 B098	
	BOSCH : LIE8 0 124 525 101	**150 A**
	BOSCH : 0 124 525 044	
	VALEO : SG15 L027	**155 A**
M9R	**BOSCH : 0 124 425 018**	**120 A**
	VALEO : TG15 C091	**150 A**
	MITSUBISHI : A004 TJ0 281	**210 A**

Note:

There is a configuration in the Protection and Switching Unit for the alternator fitted to the vehicle (see **Protection and Switching Unit: Removal - Refitting**) (MR395, 87G, Engine compartment connection unit).

F4R or F9Q or K4J or K4M or K9K or M9R

Engine	Engine suffix	Starter
K4J	730, 732, 740	**VALEO D7E27**
K4M	760, 761, 764, 768, 788, 812, 813	**VALEO D7E47** **VALEO TS10E3**
F4R	770, 771, 774, 776	**VALEO D7R49**
K9K	722	**MITSUBISHI M000T91581**
	724, 728, 732, 734	**MITSUBISHI M000T87881**
	729	**MITSUBISHI M000T21471**
F9Q	800, 803, 804, 808	**VALEO D7R49**
M9R	700, 724	**VALEO TS22E5**

K9K, and 722 or 724 or 728 or 729 or 732

Essential equipment
safety strap(s)

Tightening torques ▽	
alternator mounting bolts	**21 N.m**
air conditioning compressor mounting bolts	**21 N.m**
free pulley support mounting bolts	**21 N.m**
half-subframe mounting bolts	**105 N.m**
half-subframe mounting nuts	**21 N.m**

REMOVAL

REMOVAL PREPARATION OPERATION

❑ Position the vehicle on a two-post lift (see **Vehicle: Towing and lifting**) (02A, Lifting equipment).

❑ Remove the engine cover.

❑ Disconnect:

- the battery (see **Battery: Removal - Refitting**) (80A, Battery),
- the electrical connections.

❑ Move the alternator harness to one side.

❑ Remove:

- the front wheels (see **Wheel: Removal - Refitting**) (35A, Wheels and tyres),
- the front wheel arch liners (see **Front wheel arch liner: Removal - Refitting**) (55A, Exterior protection),
- the engine undertray,
- the front bumper (see **Front bumper: Removal - Refitting**) (55A, Exterior protection).

Note:

When fitting the safety strap, take care:

- not to crush the cooling hoses,
- not to strap up the half-subframe.

❑ Fit the cooling assembly to the upper cross member using a **safety strap(s)**.

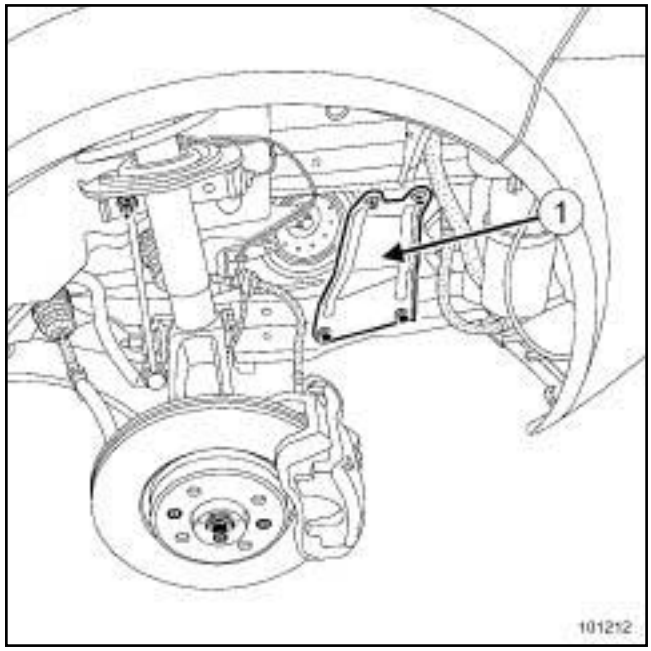

101212

❑ Remove:

- the side stiffener mounting bolts,
- the side reinforcements (**1**) .

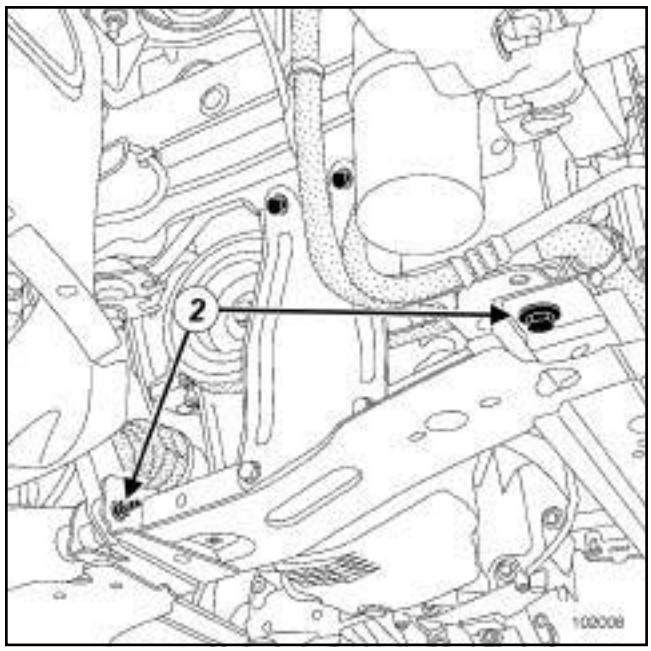

102008

❑ Remove:

- the mounting bolts and nuts (**2**) from the half-subframe,
- the half-subframe.

K9K, and 722 or 724 or 728 or 729 or 732

❑ Remove the accessories belt (see **11A**, **Top and front of engine**, **Accessories belt: Removal - Refitting**, page **11A-4**) .

AIR CONDITIONING or CLIMATE CONTROL

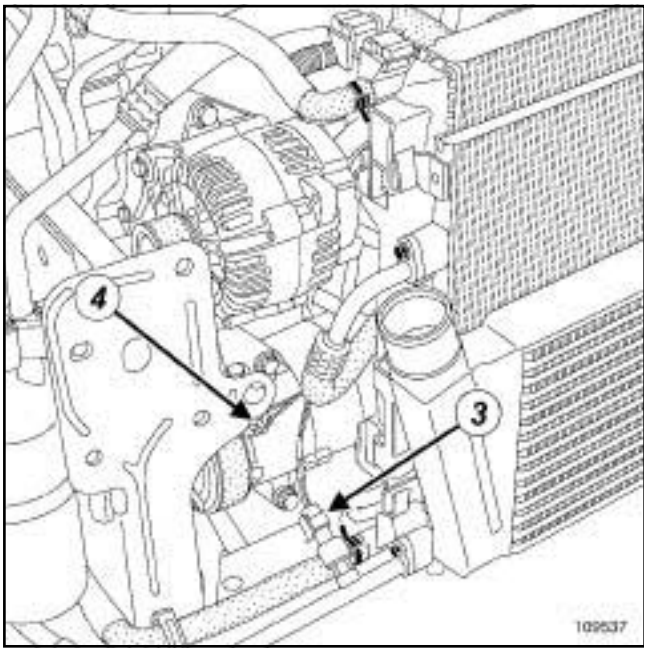

109537

❑ Disconnect:

- the connector (**3**) from the pressostat,
- the connector (**4**) from the air conditioning compressor.

❑ Move the wiring harness to one side.

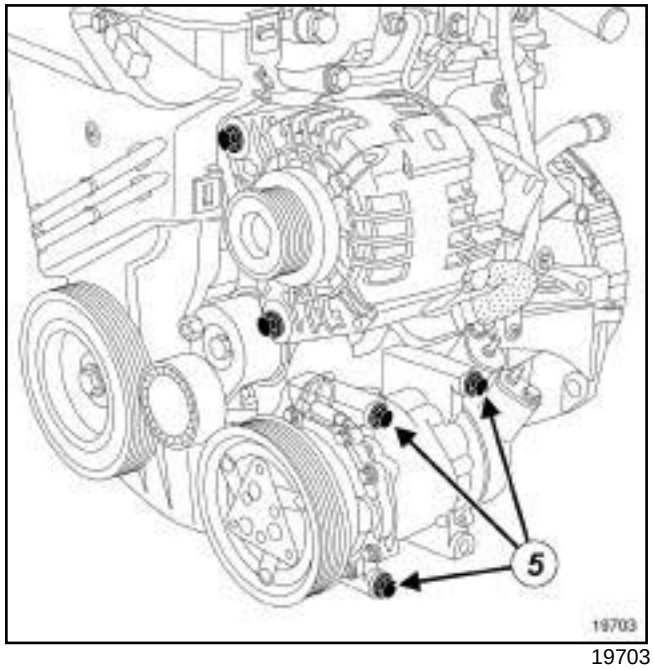

19703

❑

Note:

Take care not to constrain the compressor air conditioning pipes during this operation.

❑ Remove the mounting bolts (**5**) from the air conditioning compressor.

❑ Remove the air conditioning compressor and attach it using a **safety strap(s)**.

K9K, and 722 or 724 or 728 or 729 or 732

BASIC HEATING

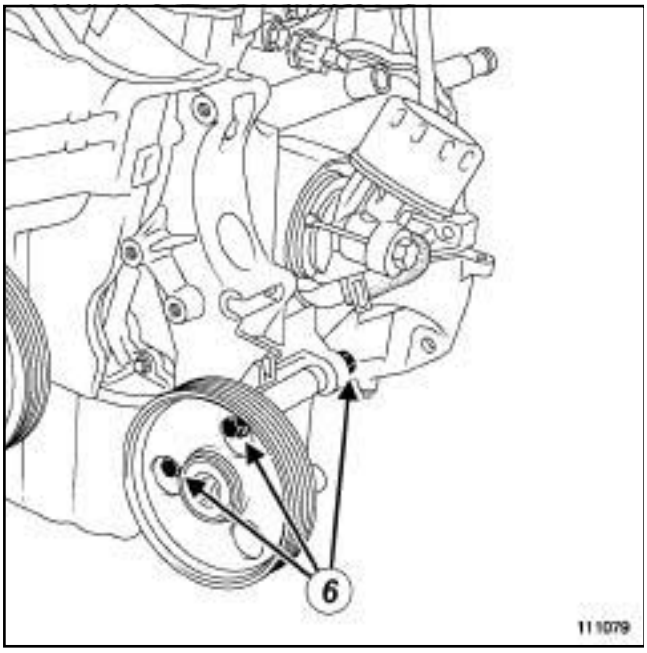

111079

❑ Remove:

- the idler pulley support mounting bolts (**6**) ,
- the idler pulley support.

ALTERNATOR REMOVAL OPERATION

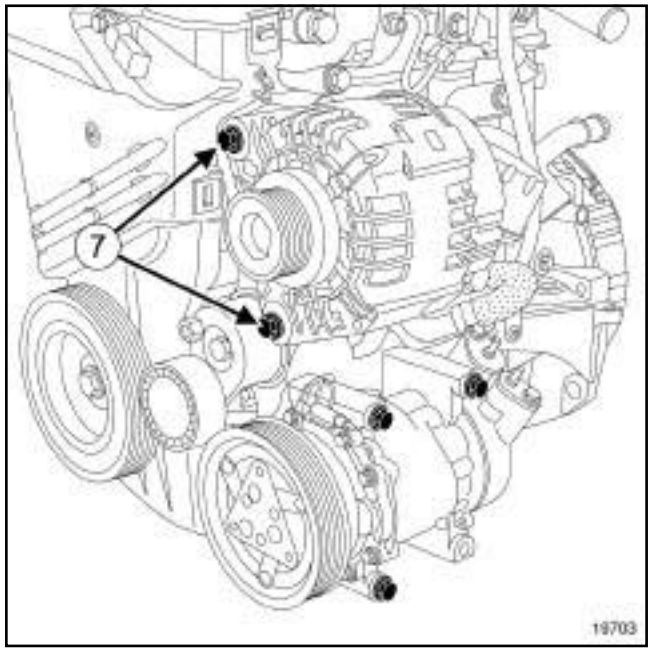

19703

❑

WARNING

Do not damage the cooling unit vanes (radiator, condenser, etc.) during handling.

Note:

To ease altemator removal, move the cooling system towards the front slightly.

❑ Remove:

- the mounting bolts (**7**) from the alternator,
- the alternator.

K9K, and 722 or 724 or 728 or 729 or 732

REFITTING

I - REFITTING PREPARATION OPERATION

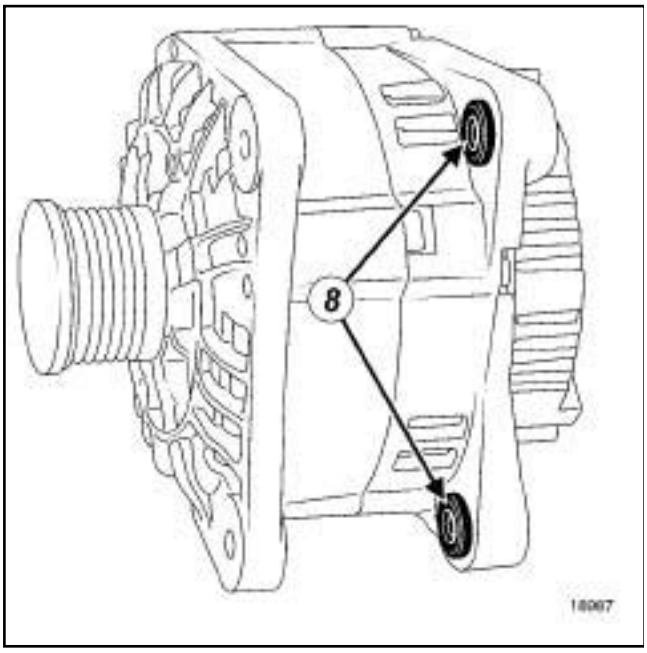

18987

❑ Refit the rings (**8**) using pliers or a vice.

II - ALTERNATOR REFITTING OPERATION

❑ Refit:

- the alternator,
- the alternator mounting bolts.

❑ Tighten to torque the **alternator mounting bolts (21 N.m)**.

III - FINAL OPERATION

AIR CONDITIONING or CLIMATE CONTROL

❑ Refit:

- The air conditioning compressor,
- the air conditioning compressor mounting bolts.

❑ Torque tighten the **air conditioning compressor mounting bolts (21 N.m)**.

❑ Connect:

- the pressostat connector,
- the air conditioning compressor connector.

BASIC HEATING

❑ Refit:

- the free pulley support,
- the free pulley support mounting bolts.

❑ Torque tighten the **free pulley support mounting bolts (21 N.m)**.

❑ Refit the accessories belt (see **11A**, **Top and front of engine**, **Accessories belt: Removal - Refitting**, page **11A-4**) .

❑ Apply a drop of **LOCTITE - FRENEBLOC** to the half-subframe mounting bolts.

❑ Refit:

- the half sub-frame,
- the side reinforcements.

❑ Tighten to torque:

- the **half-subframe mounting bolts (105 N.m)**,
- the **half-subframe mounting nuts (21 N.m)**.

❑ Refit:

- the front bumper (see **Front bumper: Removal - Refitting**) (55A, Exterior protection),
- the engine undertray,
- the front wheel arch liners (see **Front wheel arch liner: Removal - Refitting**) (55A, Exterior protection),
- the front wheels (see **Wheel: Removal - Refitting**) (35A, Wheels and tyres).

❑ Connect:

- the electrical connections,
- the battery (see **Battery : Removal - Refitting**) (80A, Battery).

❑ Refit the engine cover.

B84 or C84 or G84 or S84, and F4R, and 770 or 771 or 776

Tightening torques ▽	
alternator mounting bolts	**25 Nm**
battery cover mounting bolts	**4 Nm**
wheel bolts	**110 Nm**

REMOVAL

❑ Position the vehicle on a two-post lift (see **Vehicle: Towing and lifting**) (MR 364, 02A, Lifting equipment).

❑ Disconnect the battery (see **Battery: Removal - Refitting**) (MR 364, 80A, Battery).

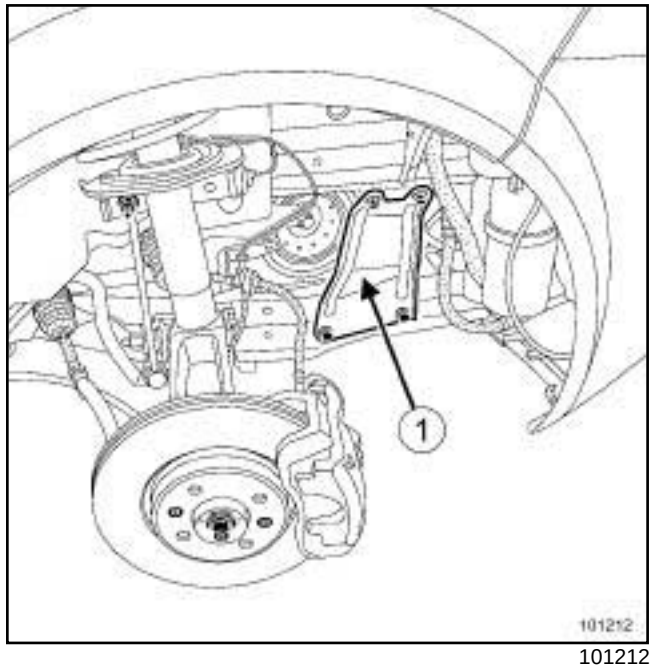

101212

❑ Remove:

- the engine covers,
- the front right-hand wheel,
- the front right-hand wheel arch liner,
- the radiator cross member side reinforcement (**1**) ,
- the bumper.

❑ Disconnect:

- the fog lights connector (if fitted to the vehicle),
- the headlight washer pipes (if the fitted on vehicle) at the windscreen washer fluid reservoir end.

❑ Remove:

- the bumper mountings,
- the bumper.

❑ Disconnect the windscreen washer fluid reservoir pipes.

B84 or C84 or G84 or S84, and F4R, and 770 or 771 or 776

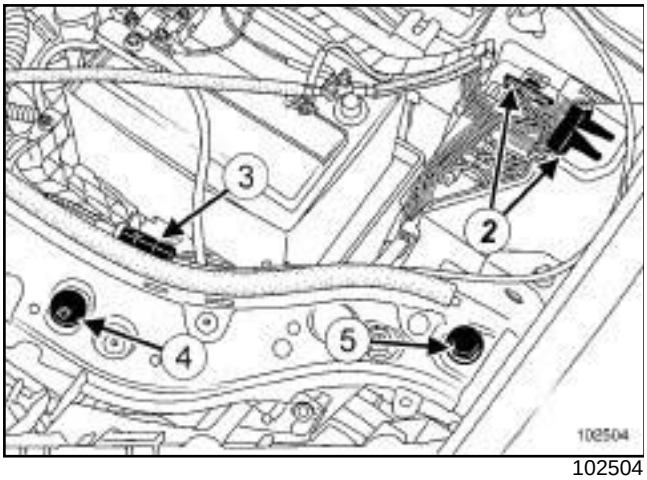

102504

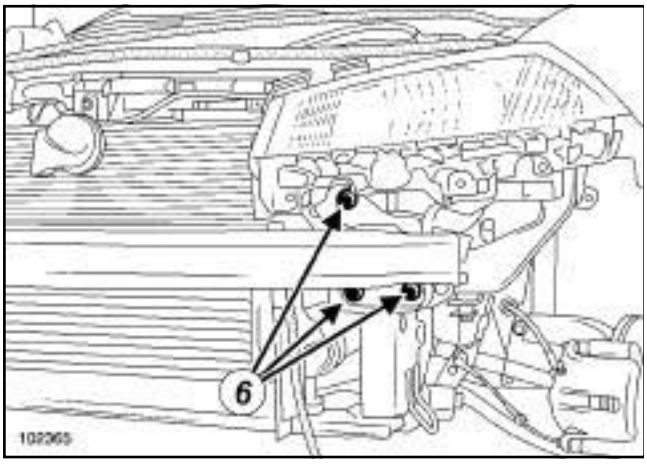

102365

- ❑ Disconnect the two connectors (**2**) .
- ❑ Detach the bonnet opening cable (**3**) .
- ❑ Remove:
  - clip (**4**) ,
  - the mounting (**5**) ,
  - the impact cross member mounting bolts (**6**) ,
  - the front end panel,
  - the accessories belt (see **11A**, **Top and front of engine**, **Accessories belt: Removal - Refitting**, page **11A-4**) .
- ❑ Disconnect the alternator electrical connections.

F4R, and 776

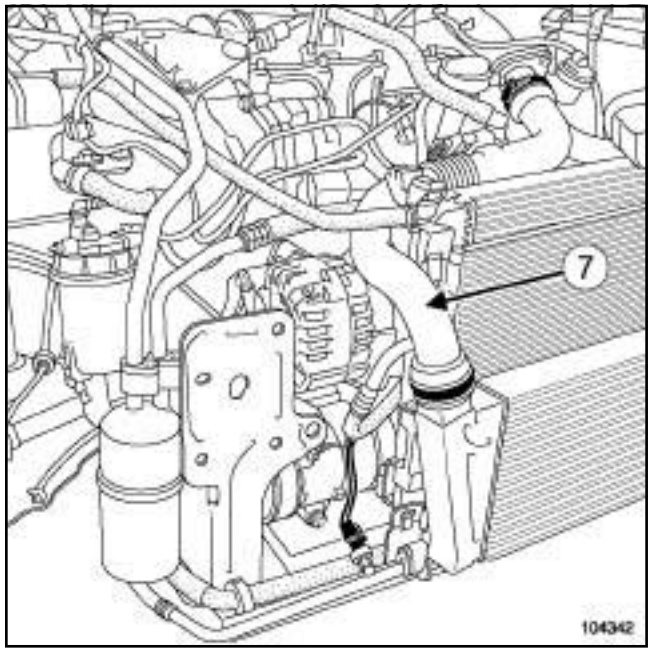

104342

- ❑ Remove:
  - the intercooler air duct (**7**) ,
  - the accessories belt tensioning roller.

B84 or C84 or G84 or S84, and F4R, and 770 or 771 or 776

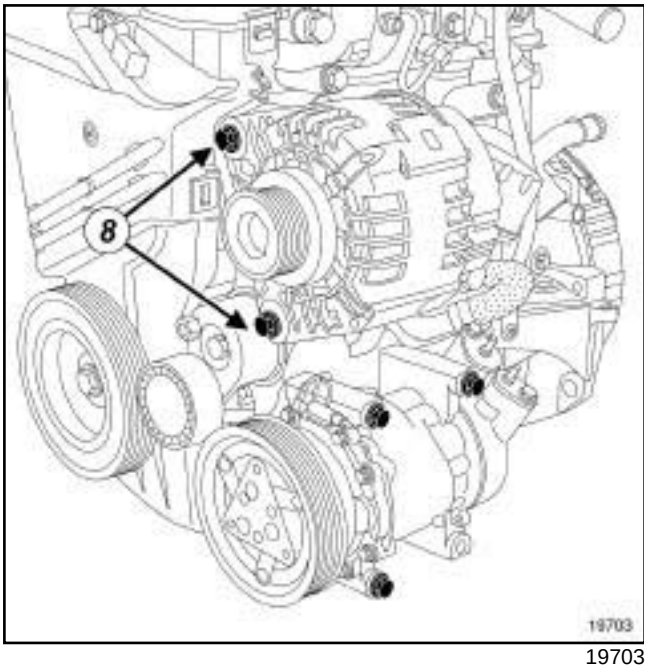

19703

❑ Remove:

- the mounting bolts (**8**) from the alternator,
- the alternator using a screwdriver.

WARNING
Do not force it against the air conditioning hose: there is a risk of refrigerant fluid escaping.

Note:
To facilitate removal of the alternator, shift the cooling assembly gently forward (be careful not to deform the condenser pipes).

REFITTING

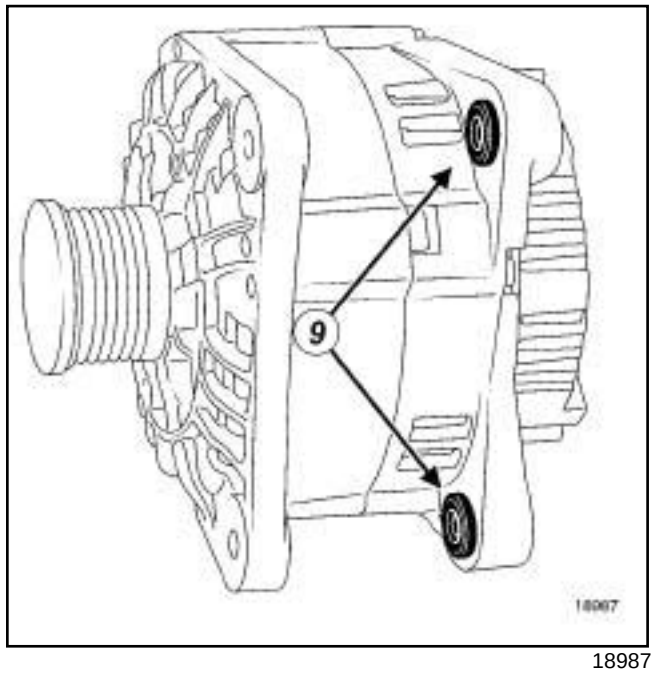

18987

❑ Press in the rings (**9**) using pliers or a vice to make the fitting operation easier.

WARNING
When replacing the belt, be sure to replace the tensioning rollers and fixed rollers.

❑ Torque tighten the **alternator mounting bolts (25 Nm)**.

❑ Replace the accessories belt.

❑ Tension the accessories belt (see **11A**, **Top and front of engine**, **Accessories belt: Removal - Refitting**, page **11A-4**) .

❑ Proceed in the reverse order to removal.

❑ Connect the battery (see **Battery : Removal - Refitting**) (MR 364, 80A, Battery).

❑ Torque tighten:

- the **battery cover mounting bolts (4 Nm)**,
- the **wheel bolts (110 Nm)**.

B84 or C84 or G84 or S84, and F9Q, and 800 or 804 or 808

Tightening torques ▽	
alternator mounting bolts	**25 Nm**
wheel bolts	**110 Nm**
battery cover mounting bolts	**4 Nm**

REMOVAL

❑ Position the vehicle on a two-post lift (see **Vehicle: Towing and lifting**) (MR 364, 02A, Lifting equipment).

❑ Disconnect the battery (see **Battery: Removal - Refitting**) (MR 364, 80A, Battery).

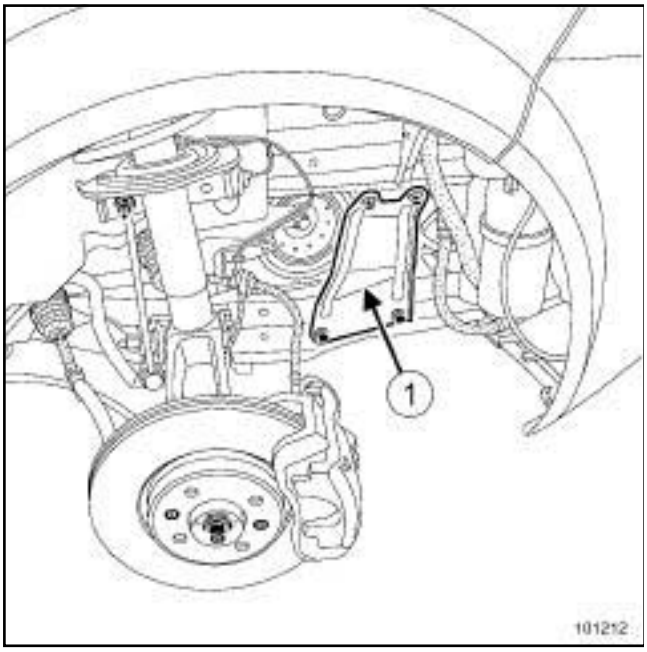

101212

❑ Remove:

- the engine covers,
- the front wheels,
- the wheel arch liners,
- the half sub-frame side reinforcement (**1**) ,
- the bumper (see **Front bumper: Removal - Refitting**) (MR 365, 55A, Exterior protection).

❑ Disconnect the screen washer pipes.

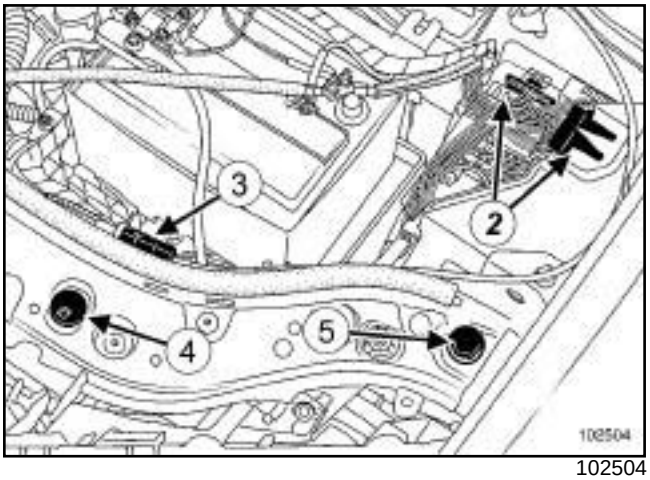

102504

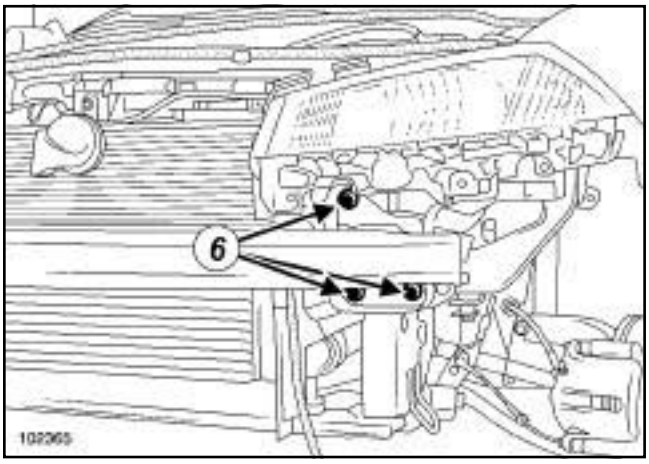

102365

❑ Disconnect the connectors (**2**) .

❑ Detach the bonnet opening cable (**3**) .

❑ Remove:

- clip (**4**) ,
- the mounting (**5**) ,
- the mounting bolts (**6**) from the front end panel,
- the front end panel,
- the accessories belt (see **11A**, **Top and front of engine**, **Accessories belt: Removal - Refitting**, page **11A-4**) .

❑ Disconnect the alternator electrical connections.

❑ Remove the accessories belt tensioning roller.

B84 or C84 or G84 or S84, and F9Q, and 800 or 804 or 808

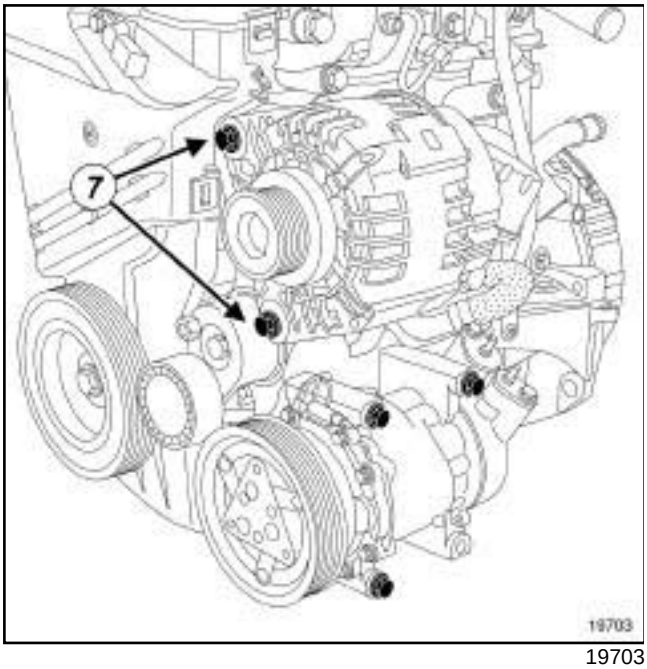

19703

❑ Remove:

- the alternator mountings (**7**) ,
- the alternator using a screwdriver.

To facilitate removal of the alternator, shift the cooling assembly forward gently (be careful not to deform the condenser pipes).

REFITTING

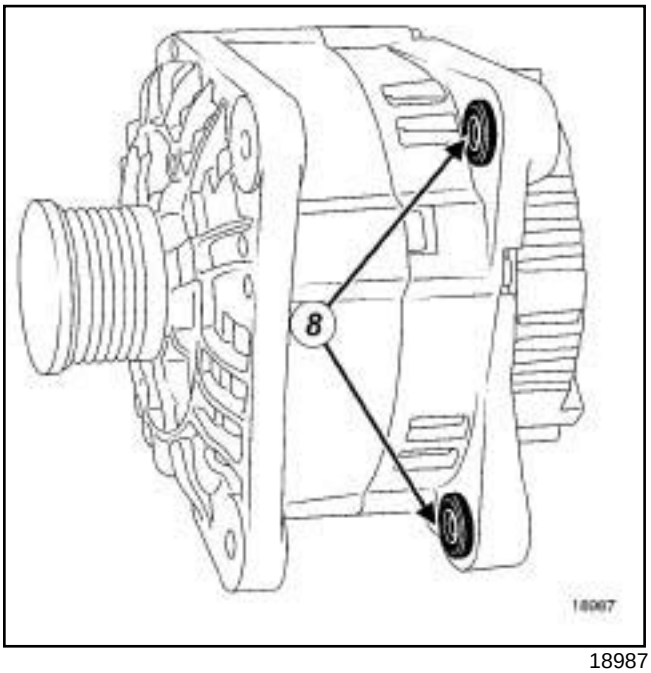

18987

❑ Use a vice to press in the rings (**8**) to facilitate fitting.

❑ Refit the alternator.

❑ Torque tighten the **alternator mounting bolts (25 Nm)**.

❑ Refit the accessories belt (see **11A**, **Top and front of engine**, **Accessories belt: Removal - Refitting**, page **11A-4**) .

❑ Proceed in the reverse order to removal.

❑ Torque tighten the **wheel bolts (110 Nm)**.

❑ Connect the battery (see **Battery : Removal - Refitting**) (MR 364, 80A, Battery).

❑ Torque tighten the **battery cover mounting bolts (4 Nm)**.

B84 or C84 or G84 or S84, and K4J – B84 or C84 or G84 or S84, and K4M

Tightening torques ▽	
alternator bolts	**21 Nm**
strut bolts on the alternator	**21 Nm**
strut nut on the stud on the engine side	**21 Nm**

REMOVAL

❑ Position the vehicle on a two-post lift (see **Vehicle: Towing and lifting**) (MR 364, 02A, Towing equipment).

❑ Disconnect the battery (see **Battery: Removal - Refitting**) (MR 364, 80A, Battery).

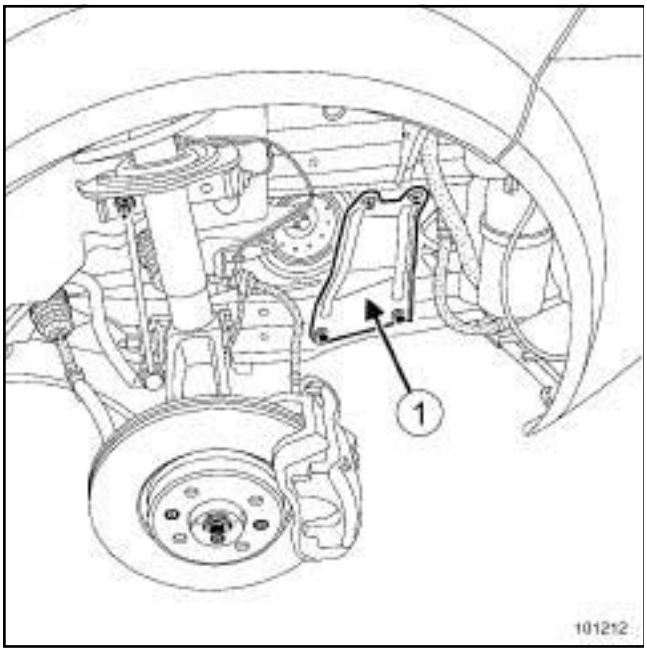

101212

❑ Remove:

- the engine covers,
- the front right-hand wheel (see **Wheel: Removal - Refitting**) (MR 364, 35A, Wheels and tyres),
- the front right-hand wheel arch liner (see **Front wheel arch liner: Removal - Refitting**) (MR 364, 55A, Exterior protection),
- the radiator cross member side reinforcement (**1**) ,
- the bumper (see **Front bumper: Removal - Refitting**) (MR 364, 55A, Exterior protection).

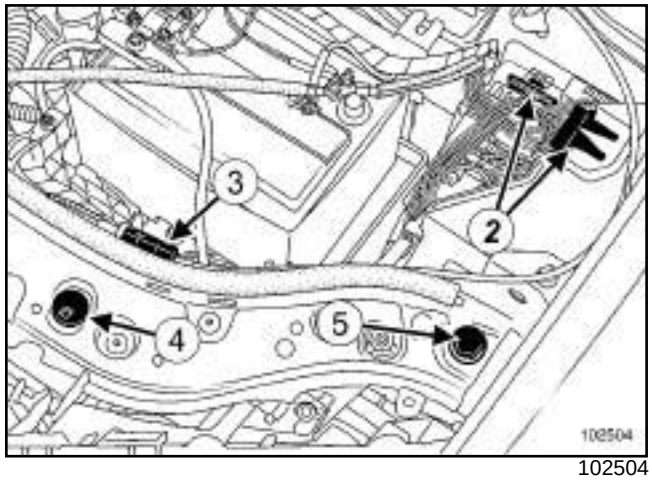

102504

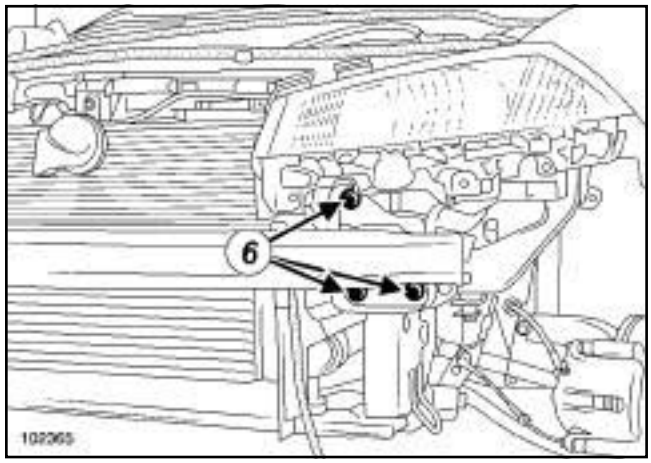

102365

❑ Disconnect the two connectors (**2**) .

❑ Detach the bonnet opening cable (**3**) .

❑ Remove:

- clip (**4**) ,
- the mounting (**5**) ,
- the impact cross member bolts (**6**) ,
- the front end panel,
- the accessories belt (see **11A**, **Top and front of engine**, **Accessories belt: Removal - Refitting**, page **11A-4**) (MR 364, 11A,Top and front of engine).

❑ Disconnect the alternator electrical connections.

❑ Remove the alternator retaining strut.

B84 or C84 or G84 or S84, and K4J – B84 or C84 or G84 or S84, and K4M

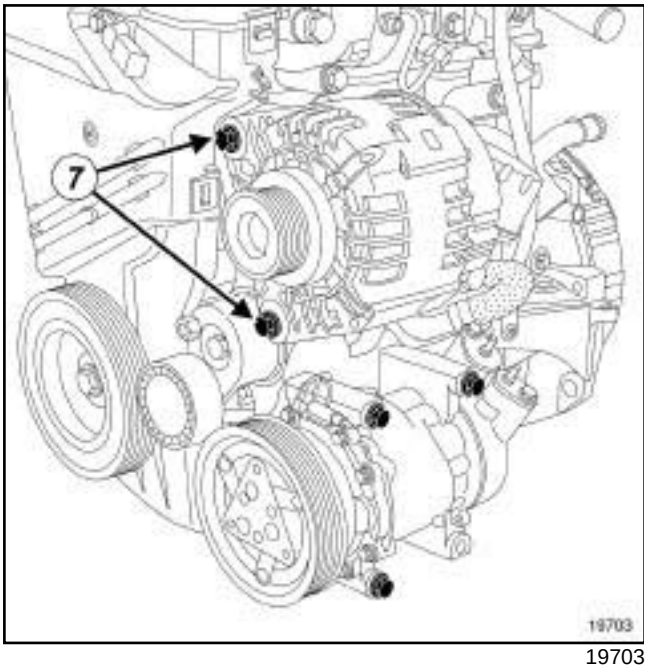

19703

❑ Remove:

- the alternator bolts (**7**) ,
- the alternator using a screwdriver.

> Note:
>
> Do not force it against the air conditioning hose: there is a risk of refrigerant fluid escaping.

> Note:
>
> To facilitate removal of the alternator, shift the cooling assembly gently forward (be careful not to deform the condenser pipes).

REFITTING

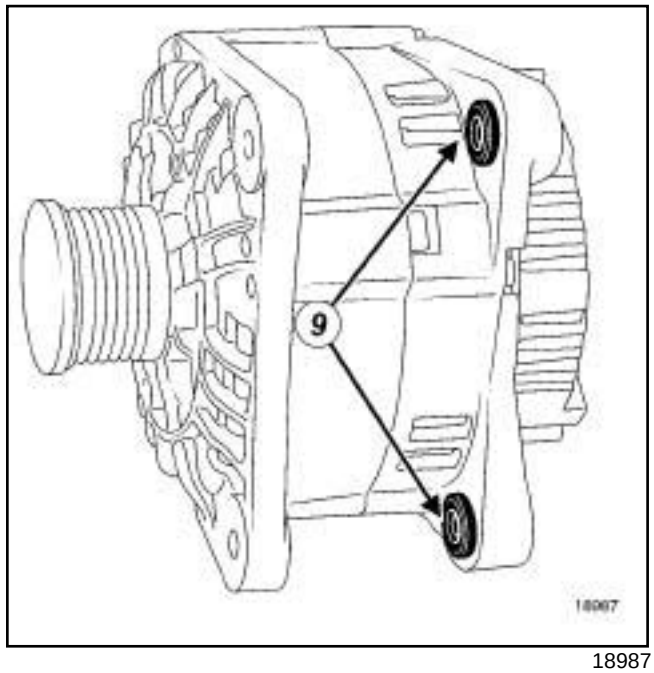

18987

❑ Press in the rings (**9**) using pliers or a vice to make the fitting operation easier.

❑ When replacing the belt, be sure to replace the tension wheels and inertia reel.

❑ Torque tighten:

- the **alternator bolts (21 Nm)**,
- the **strut bolts on the alternator (21 Nm)**.
- the **strut nut on the stud on the engine side (21 Nm)**,

❑ Replace the accessories belt.

❑ Tension the accessories belt (see **11A**, **Top and front of engine**, **Accessories belt: Removal - Refitting**, page **11A-4**) .

❑ Proceed in the reverse order to removal.

❑ Connect the battery (see **Battery: Removal - Refitting**) (MR 364, 80A, Battery).

B84 or C84, and F4R, and 774

Tightening torques ▽	
alternator mounting bolts	**25 Nm**
wheel bolts	**130 Nm**
battery cover mounting bolts	**4 Nm**

REMOVAL

❑

> Note:
>
> The tensioning roller and fixed roller must be replaced when the accessories belt is replaced.

❑ Position the vehicle on a two-post lift (see **Vehicle: Towing and lifting**) (MR 364, 02A, Lifting equipment).

❑ Disconnect the battery (see **Battery: Removal - Refitting**) (MR 364, 80A, Battery).

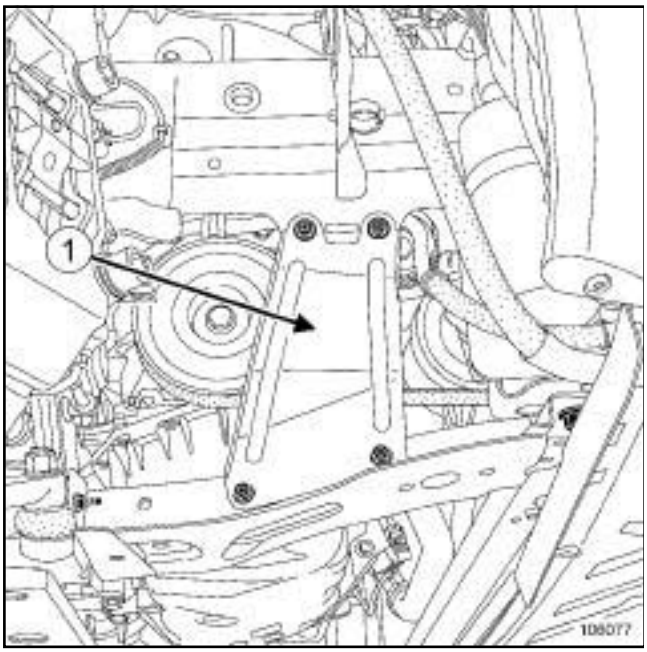

106077

❑ Remove:

- the engine covers,
- the front right-hand wheel,
- the right-hand wheel arch liner,
- the side stiffener (**1**) ,
- the fog lights connector,
- the front bumper (see **Front bumper: Removal - Refitting**) (MR 365, 55A, Exterior protection).

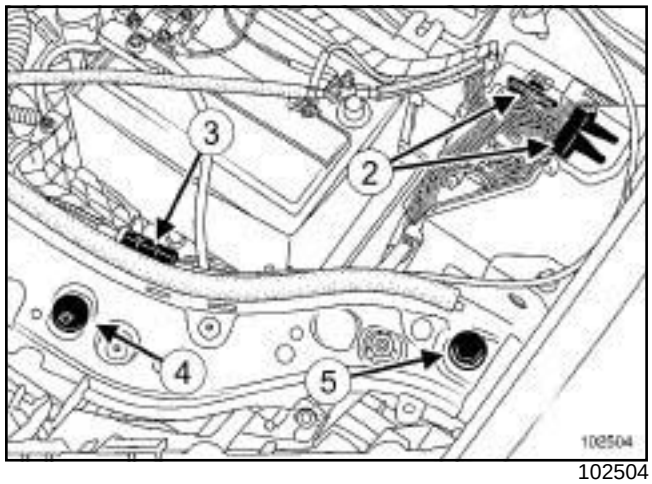

102504

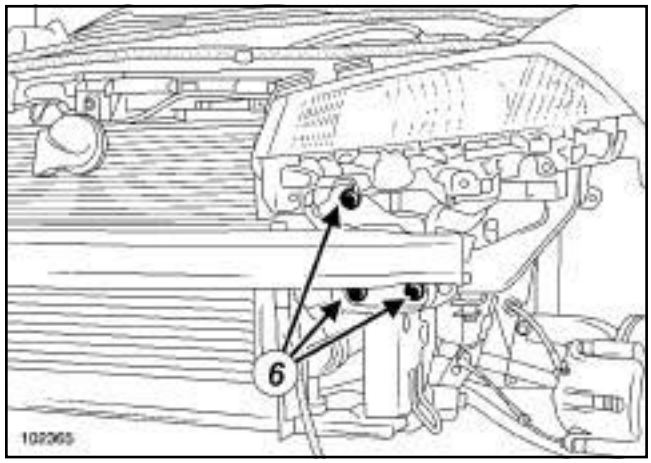

102365

❑ Disconnect the two connectors (**2**) .

❑ Detach the bonnet opening cable (**3**) .

❑ Remove:

- the clip (**4**) ,
- the mounting (**5**) ,
- the impact cross member mounting bolt (**6**) ,
- the accessories belt (see **11A**, **Top and front of engine**, **Accessories belt: Removal - Refitting**, page **11A-4**) .

❑ Disconnect the alternator electrical connections.

❑ Remove the accessories belt tensioning roller.

B84 or C84, and F4R, and 774

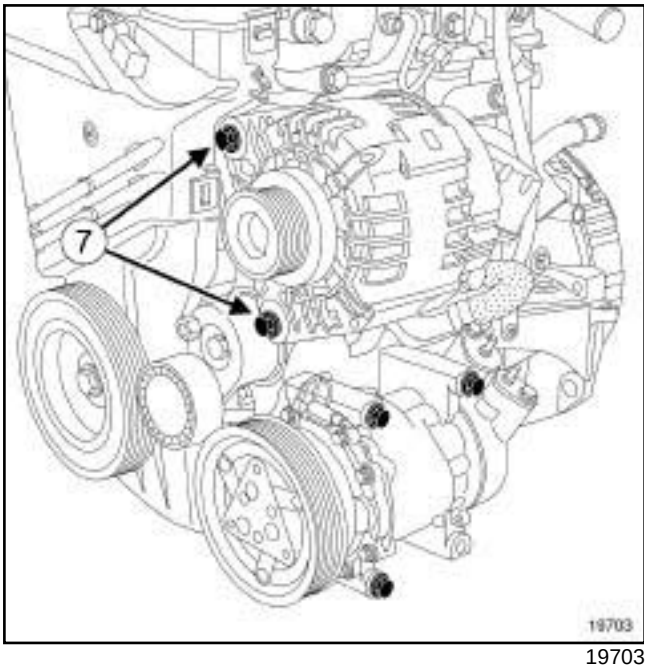

19703

❑ Remove:

- the alternator mountings (**7**) ,
- the alternator using a screwdriver.

❑ To facilitate removal of the alternator, shift the cooling assembly forward gently (be careful not to deform the condenser pipes).

REFITTING

❑

> **WARNING**
> The belt must be replaced with a new one if it has been removed.

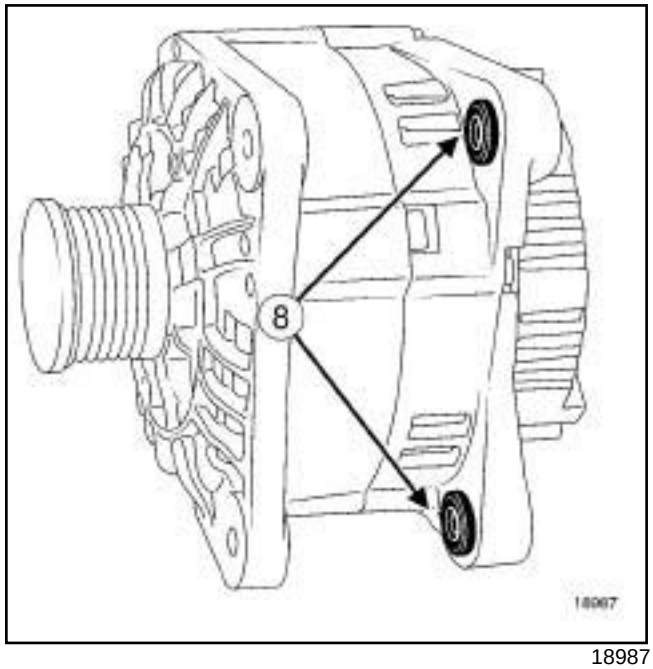

18987

❑ Press in the rings (**8**) using pliers or a vice to make the fitting operation easier.

❑ Refit:

- the alternator,
- the alternator mounting bolts.

❑ Torque tighten the **alternator mounting bolts (25 Nm)**.

❑ Refit the new accessories belt.

❑ Refit the accessories belt (see **11A**, **Top and front of engine**, **Accessories belt: Removal - Refitting**, page **11A-4**) .

❑ Torque tighten the **wheel bolts (130 Nm)**.

❑ Proceed in the reverse order to removal.

❑ Connect the battery (see **Battery : Removal - Refitting**) (MR 364, 80A, Battery).

❑ Torque tighten the **battery cover mounting bolts (4 Nm)**.

B84 or C84 or E84 or K84 or L84, and M9R

Tightening torques ▽	
alternator bolts	**25 Nm**
front end panel lower bolts	**44 Nm**
front end panel upper bolts	**21 Nm**

REMOVAL

I - REMOVAL PREPARATION STAGE

❏ Position the vehicle on a two-post lift (see **Vehicle: Towing and lifting**) (MR 364, 02A, Lifting equipment).

❏ Disconnect the battery (see **Battery: Removal - Refitting**) (MR 364, 80A, Battery).

❏ Remove:

- the engine cover,
- the front right-hand wheel (see **Wheel: Removal - Refitting**) (MR 364, 35A, Wheels and tyres),
- the front right-hand wheel arch liner (see **Front wheel arch liner: Removal - Refitting**) (MR 365, 55A, Exterior protection),
- the engine undertray bolts,
- the engine undertray.

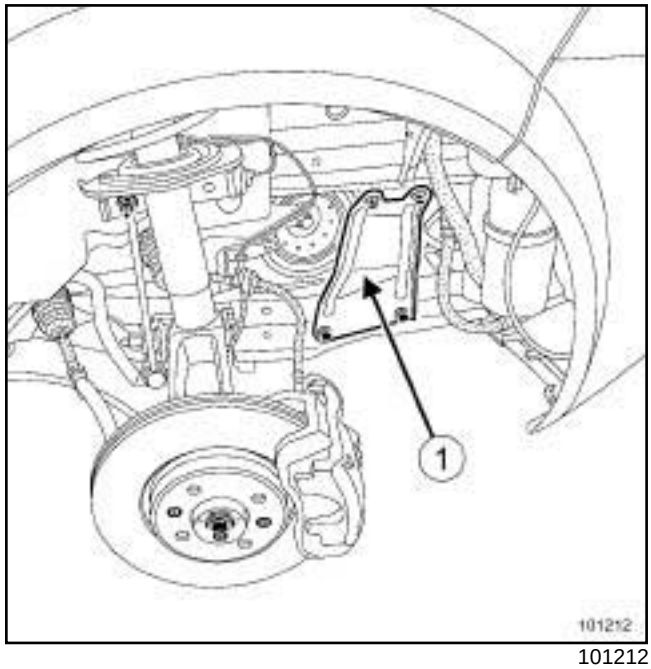

101212

❏ Remove:

- the bolts from the right-hand side stiffener on the half-subframe (**1**)
- the right-hand half-subframe side stiffener,
- the front bumper (see **Front bumper: Removal - Refitting**) (MR 365, 55A, Exterior protection).

❏ Remove the accessories belt (see **11A**, **Top and front of engine**, **Accessories belt: Removal - Refitting**, page **11A-4**) .

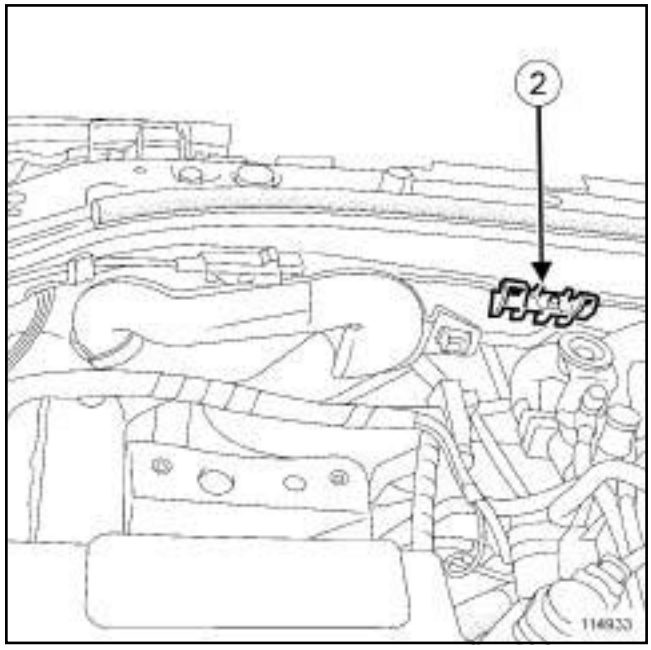

114933

❏ Unclip the air inlet scoop (**2**) .

B84 or C84 or E84 or K84 or L84, and M9R

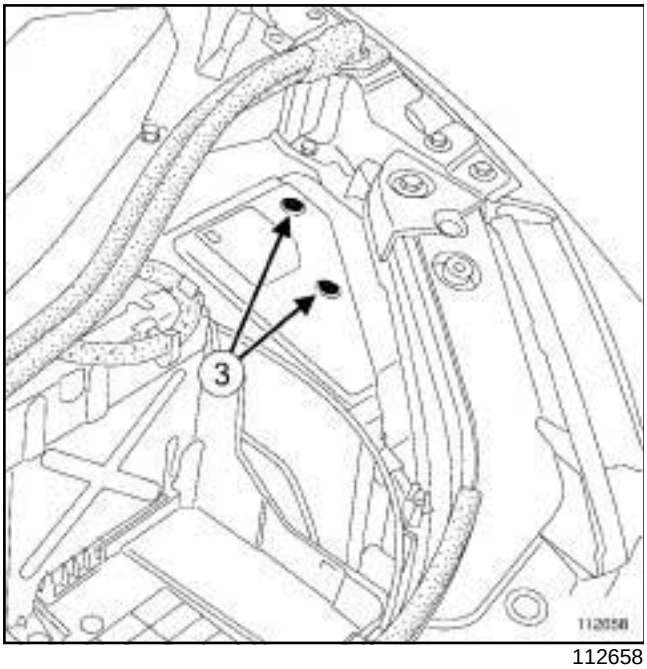

112658

❑ Remove:

- the engine accessories unit cover bolts (**3**) ,
- the engine accessories unit cover.

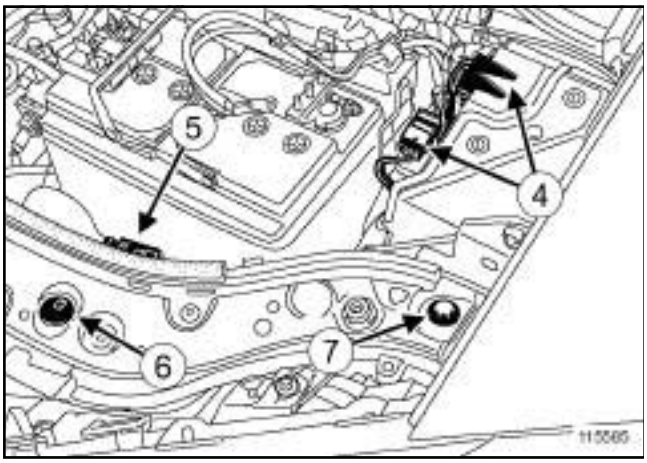

115585

❑ Disconnect the connectors (**4**) from the engine accessories unit.

❑ Unclip the bonnet release cable (**5**) .

❑ Remove:

- the clips (**6**) ,
- the front end panel upper bolts (**7**) .

❑ Disconnect the screen washer pipes.

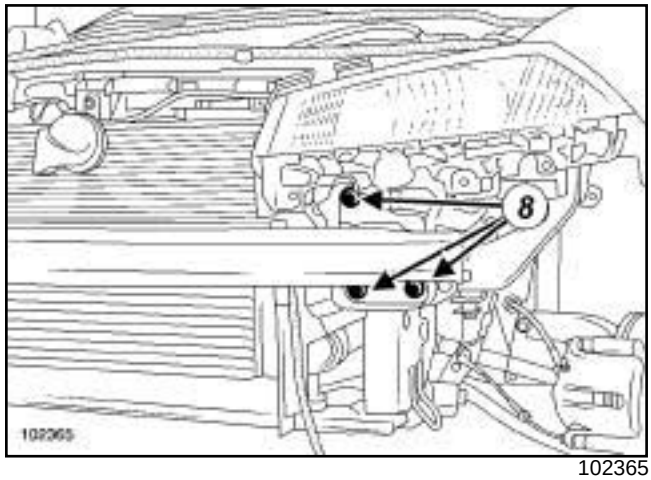

102365

❑ Remove:

- the front end panel lower bolts (**8**) ,
- the front end panel.

❑ Remove the « cooling radiator - condenser - intercooler » assembly from its housing and move it forwards.

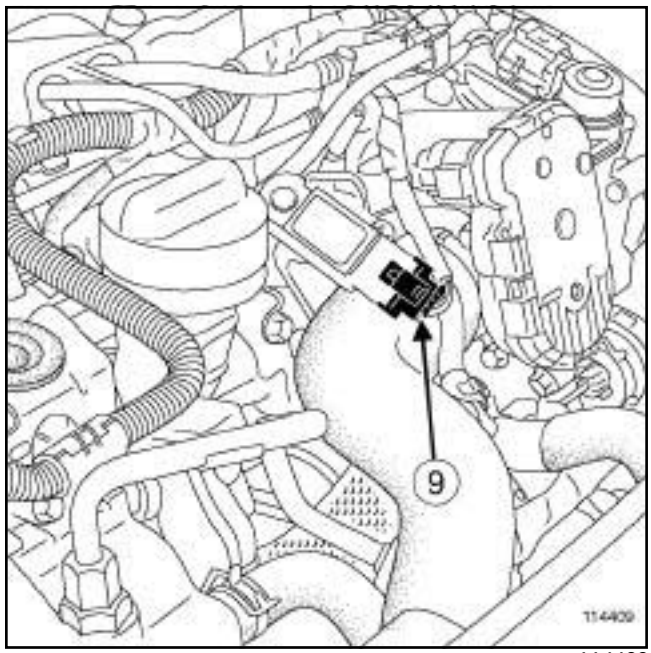

114409

❑ Disconnect the turbocharger pressure sensor connector (**9**) .

❑ Remove the turbocharger pressure sensor nut on the damper valve strut.

❑ Loosen the pipe clip on the damper valve.

B84 or C84 or E84 or K84 or L84, and M9R

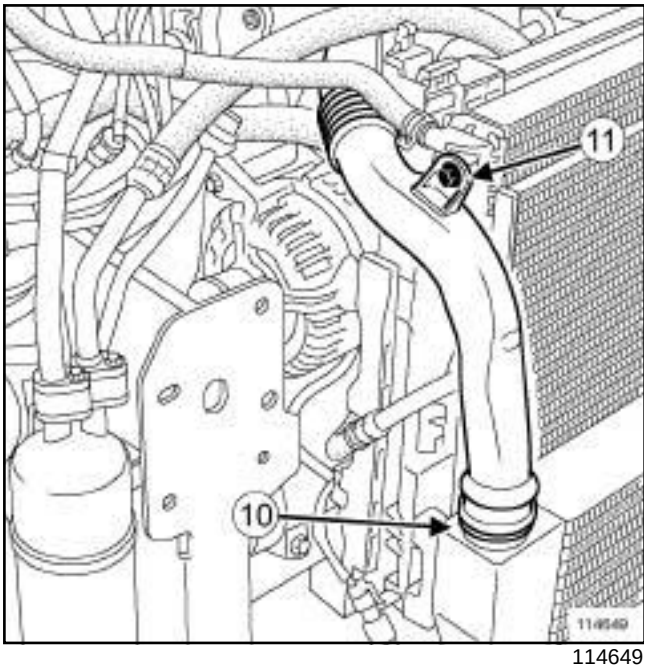

114649

❑ Remove:

- the intercooler air outlet pipe clip (**10**) ,
- the bolt (**11**) from the air pipe on the cooling radiator,
- the intercooler outlet air pipe.

II - OPERATION FOR REMOVAL OF PART CONCERNED

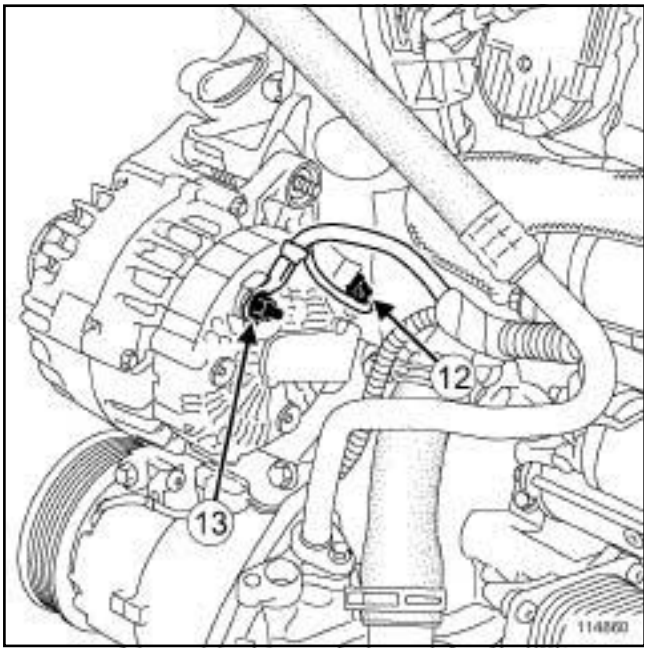

114860

❑ Disconnect the electrical connector (**12**) from the alternator.

❑ Remove the positive terminal nut (**13**) .

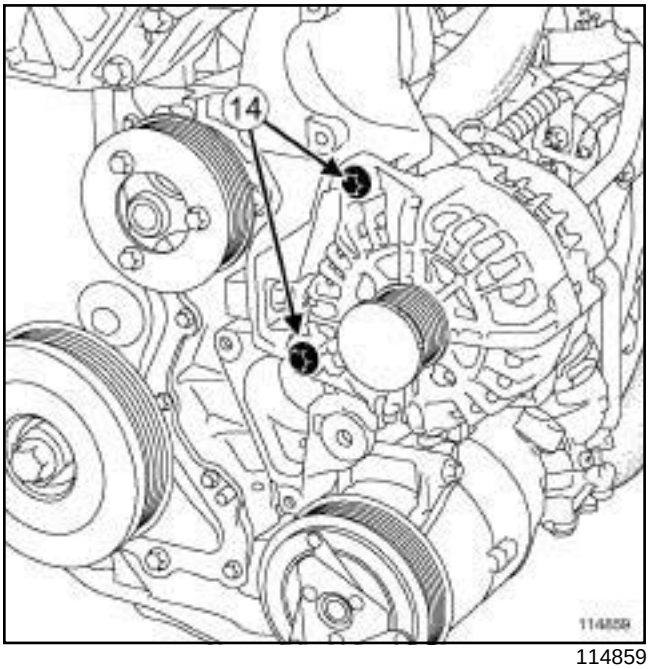

114859

❑ Remove:

- the alternator bolts (**14**) ,
- the alternator.

B84 or C84 or E84 or K84 or L84, and M9R

REFITTING

I - REFITTING OPERATION FOR PART CONCERNED

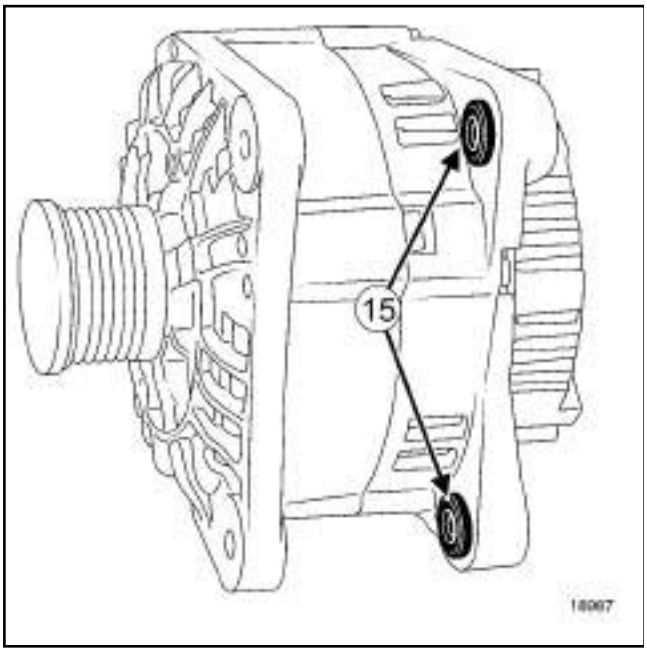

18987

- ❑ Press in the rings (**15**) using pliers or a vice to make the fitting operation easier.
- ❑ Refit:
  - the alternator,
  - the alternator bolts.
- ❑ Torque tighten the **alternator bolts (25 Nm)**.
- ❑ Refit the positive terminal nut.
- ❑ Connect the alternator electrical connector.

B84 or C84 or E84 or K84 or L84, and M9R

II - FINAL OPERATION.

❏ Refit:

- the intercooler outlet air pipe,
- the cooling radiator air pipe bolt,
- the intercooler air outlet pipe clip.

❏ Tighten the pipe clip on the damper valve.

❏ Refit the turbocharger pressure sensor nut on the damper valve strut.

❏ Connect the turbocharger pressure sensor connector.

❏ Fit the « cooling radiator - condenser - intercooler » assembly in its housing.

❏ Refit:

- the front end panel,
- the front end panel lower bolts.

❏ Connect the screen washer pipes.

❏ Refit:

- the front end panel upper bolts.
- the clips.

❏ Torque tighten:

- the **front end panel lower bolts (44 Nm)**,
- the **front end panel upper bolts (21 Nm)**.

❏ Clip on the bonnet release cable.

❏ Connect the engine accessories unit connectors.

❏ Refit the accessories unit cover.

❏ Tighten the accessories unit cover bolts.

❏ Clip on the air inlet scoop.

❏ Refit:

- the accessories belt (see **11A**, **Top and front of engine**, **Accessories belt: Removal - Refitting**, page **11A-4**) ,
- the front bumper (see **Front bumper: Removal - Refitting**) (MR 365, 55A, Exterior protection),
- the half-subframe side stiffener,
- the half-subframe side stiffener bolts,
- the front right-hand wheel arch liner (see **Front wheel arch liner: Removal - Refitting**) (MR 365, 55A, Exterior protection),
- the engine undertray bolts,
- the engine undertray,
- the front right-hand wheel (see **Wheel: Removal - Refitting**) (MR 364, 35A, Wheels and tyres),
- the engine cover.

❏ Connect the battery (see **Battery: Removal - Refitting**) (MR 364, 80A, Battery).

B84 or C84 or G84 or S84, and F4R, and 770 or 771

Tightening torques ▽	
starter mounting bolts	**38 Nm**
battery cover bolts	**4 Nm**

REMOVAL

❑ Position the vehicle on a two-post lift (see **Vehicle: Towing and lifting**) (MR 364, 02A, Lifting equipment).

❑ Disconnect the battery (see **Battery: Removal - Refitting**) (MR 364, 80A, Battery).

14853

❑ Remove the engine covers.

❑ Disconnect:

- the oil level sensor connector,
- the starter connections,

❑ Remove:

- the starter motor mounting bolts,
- the starter.

REFITTING

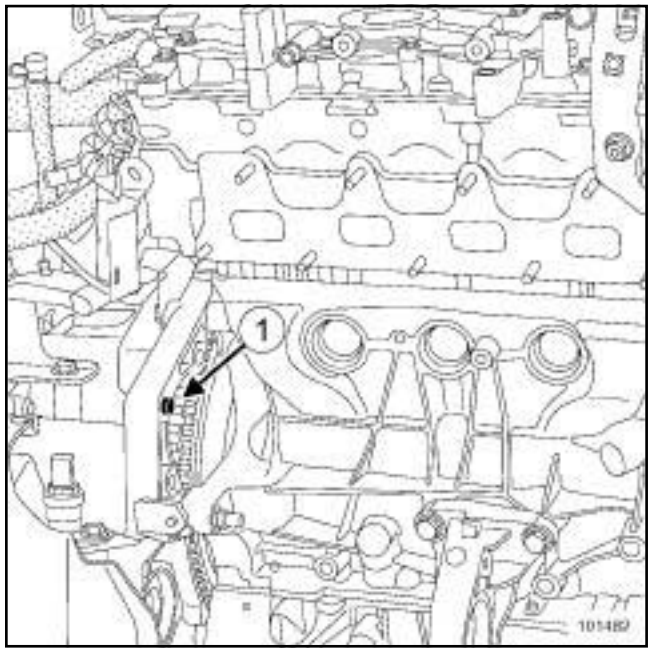

101482

❑ Check that the centring dowel (**1**) is in place.

❑ Proceed in the reverse order to removal.

❑ Connect the battery (see **Battery : Removal - Refitting**) (MR 364, 80A, Battery).

❑ Torque tighten:

- the **starter mounting bolts (38 Nm)**,
- the **battery cover bolts (4 Nm)**.

B84 or C84 or G84 or S84, and F9Q, and 800 or 808

Tightening torques ▽	
wheel bolts	**110 Nm**
engine cover bolts	**4 Nm**

REMOVAL

❑ Position the vehicle on a two-post lift (see **Vehicle: Towing and lifting**) .

❑ Remove:

- the engine covers,
- the front right-hand wheel,
- the battery (see **Battery: Removal - Refitting**) (MR 364, 80A, Battery),
- the battery tray (see **Battery tray: Removal - Refitting**) (MR 364, 80A, Battery),
- ,
- the air hose between the air filter and turbocharger duct,

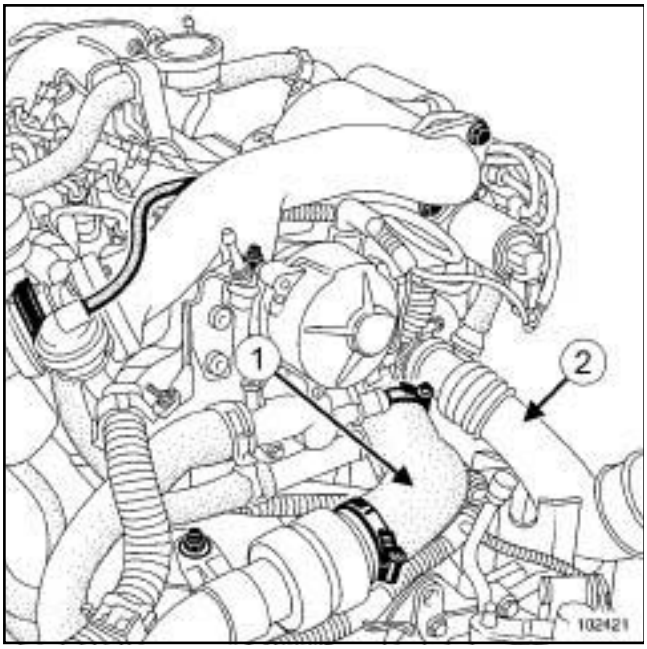

102421

❑ Remove:

- the air hose (**1**) and gently separate the hose (**2**) ,
- the engine tie-bar.

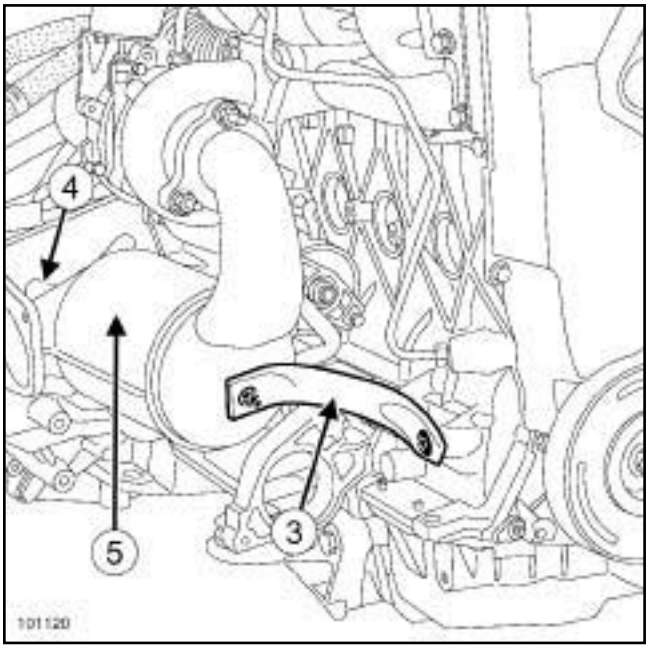

101120

❑ Remove:

- the bracket (**3**) ,
- the catalytic converter (**4**) mounting plate on the gearbox,
- the catalytic converter (**5**) (see **19B**, **Exhaust**, **Catalytic converter: Removal - Refitting**, page **19B-46**) .

❑ Disconnect the starter motor electrical connections.

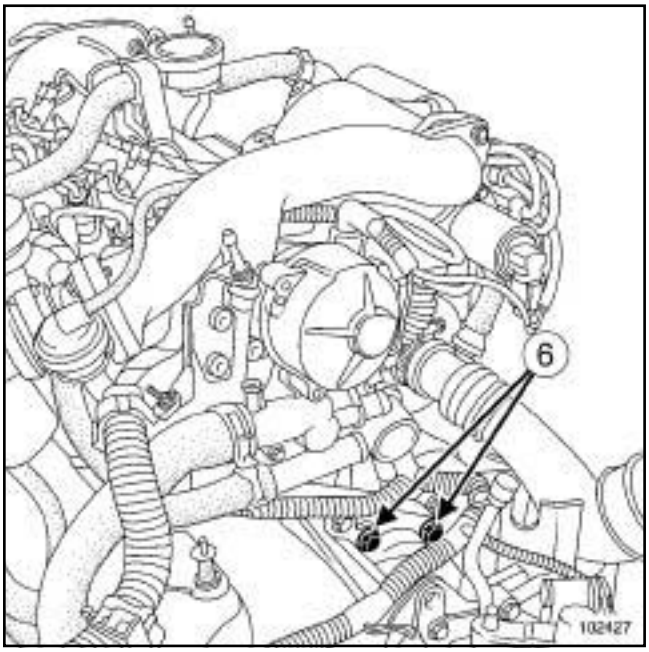

102427

❑ Remove:

- the starter bolts (**6**) ,

B84 or C84 or G84 or S84, and F9Q, and 800 or 808

- the starter.

REFITTING

❏ Check that the centring dowel is in place.

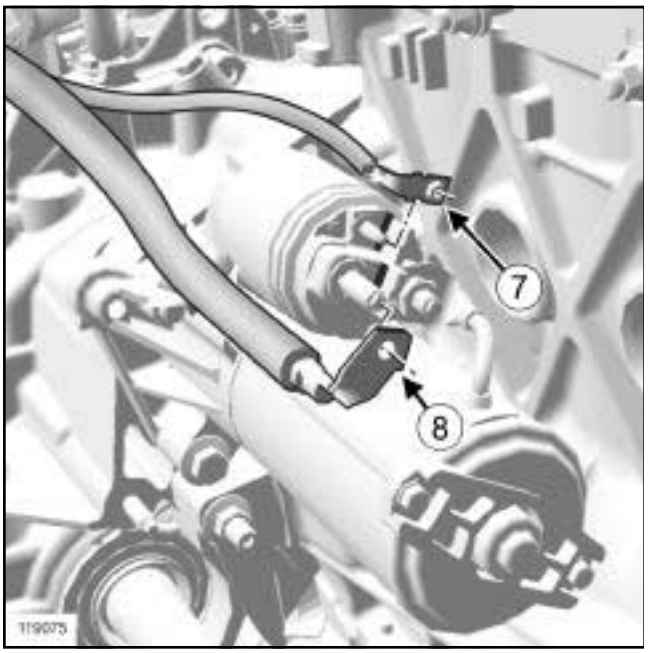

119075

❏ Fit the starter cables in accordance with the positions above:

- the excitation cable terminal flange (**7**) to be aligned with the flange facing the solenoid,
- the starter cable terminal flange (**8**) to be aligned with the flange facing the solenoid.

❏ Tighten the nuts on the starter cable terminals.

❏ Torque tighten the **starter bolts (44 Nm)**.

❏ Proceed in the reverse order to removal.

❏ Refit the catalytic converter (see **19B**, **Exhaust**, **Catalytic converter: Removal - Refitting**, page **19B-46**) .

❏ Connect the battery (see **Battery: Removal - Refitting**) (MR 364, 80A, Battery).

❏ Torque tighten:

- the **wheel bolts (110 Nm)**,
- the **engine cover bolts (4 Nm)**.

B84 or C84 or G84 or S84, and K9K, and 722

Tightening torques ▽	
starter mounting bolts	**44 Nm**
wheel bolts	**110 Nm**
battery cover bolts	**4 Nm**

REMOVAL

❑ Position the vehicle on a two-post lift (see **Vehicle: Towing and lifting**) (MR 364, 02A, Lifting equipment).

❑ Disconnect the battery (see **Battery: Removal - Refitting**) (MR 364, 80A, Battery).

❑ Remove:

- the engine covers,
- the front right-hand wheel.

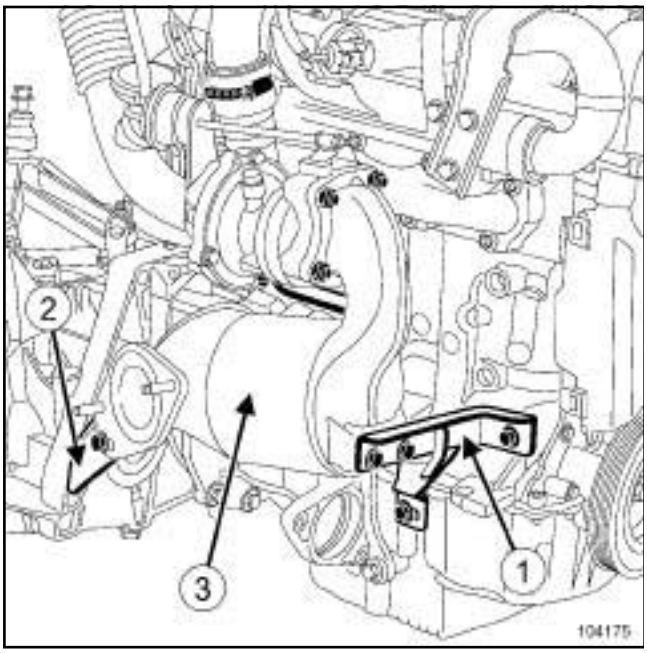

104175

❑ Remove:

- the catalytic converter stay (**1**) ,
- the catalytic converter stay (**2**) on the gearbox,
- the catalytic converter (**3**) (see **19B**, **Exhaust**, **Catalytic converter: Removal - Refitting**, page **19B-46**) .

❑ Disconnect the starter motor electrical connections.

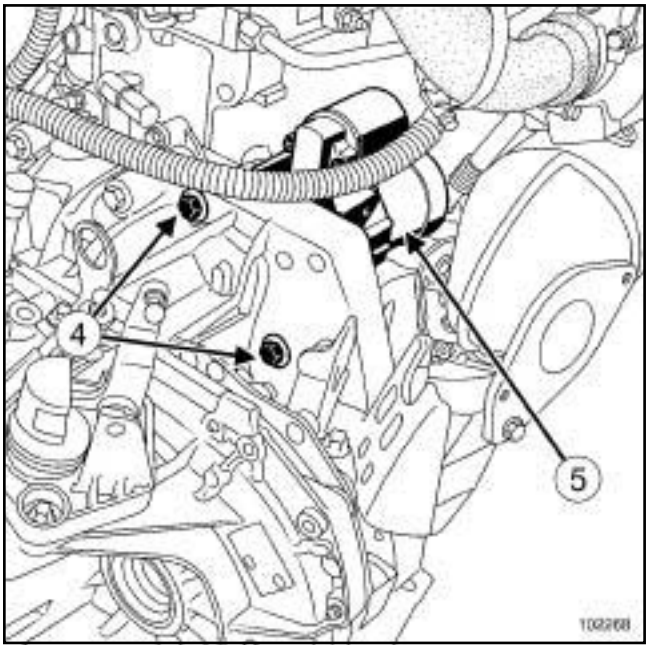

102268

❑ Remove:

- the starter mountings (**4**) ,
- the starter (**5**) .

REFITTING

❑ Check that the centring dowel is in place.

❑ Proceed in the reverse order to removal.

❑ Tighten to torque the **starter mounting bolts (44 Nm)**.

❑ Refit the catalytic converter (see **19B**, **Exhaust**, **Catalytic converter: Removal - Refitting**, page **19B-46**) .

❑ Connect the battery (see **Battery : Removal - Refitting**) (MR 364, 80A, Battery).

❑ Torque tighten:

- the **wheel bolts (110 Nm)**,
- the **battery cover bolts (4 Nm)**.

B84 or C84 or G84 or S84, and K4J – B84 or C84 or G84 or S84, and K4M

Tightening torques ▽	
starter bolts	**44 Nm**
battery cover bolts	**4 Nm**

REMOVAL

❑ Position the vehicle on a two-post lift (see **Vehicle: Towing and lifting**) (MR 364, 02A, Lifting equipment).

❑ Disconnect the battery (see **Battery: Removal - Refitting**) (MR 364, 80A, Battery).

14853

❑ Remove:

- the engine covers,
- the air resonator mounting (K4J),
- the air filter outlet duct (K4M),

❑ Disconnect:

- the oil level sensor connector,
- the starter connections,

❑ Remove:

- the starter bolts ***(1)*** ,
- the starter.

REFITTING

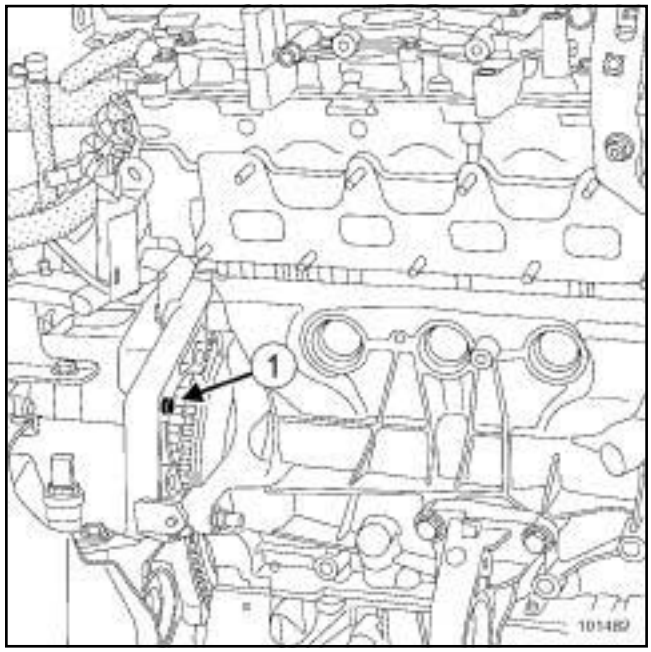

101482

❑ Check that the centring dowel (**1**) is in place.

❑ Proceed in the reverse order to removal.

❑ Connect the battery (see **Battery : Removal - Refitting**) (MR 364, 80A, Battery).

❑ Torque tighten:

- the **starter bolts (44 Nm)**,
- the **battery cover bolts (4 Nm)**.

B84 or C84 or G84 or S84, and F4R, and 776

Tightening torques ▽	
starter mounting bolts	**38 Nm**
catalytic converter downstream stay nut	**21 Nm**
heat shield mounting bolts	**8.5 Nm**
battery cover mounting bolts	**4 Nm**

REMOVAL

❑ Removal of the starter requires that the engine is removed (see **10A**, **Engine and cylinder block assembly**, **Engine/gearbox assembly: Removal - Refitting**, page **10A-97**) .

❑ Remove the catalytic converter (see **19B**, **Exhaust**, **Catalytic converter: Removal - Refitting**, page **19B-46**) .

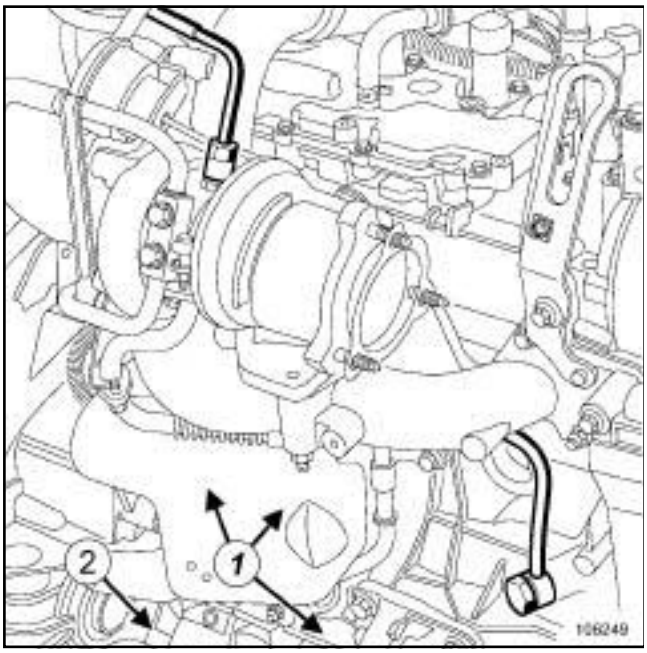

106249

❑ Remove:

- the heat shield mountings (**1**) ,
- the heat shield,
- the catalytic converter downstream strut (**2**) .

❑ Disconnect the starter supply.

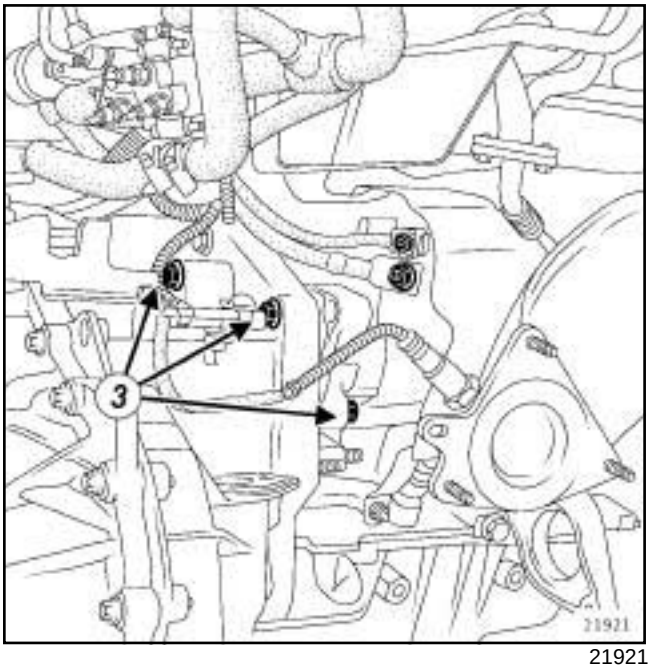

21921

❑ Remove:

- the starter mountings (**3**) ,
- the starter.

B84 or C84 or G84 or S84, and F4R, and 776

REFITTING

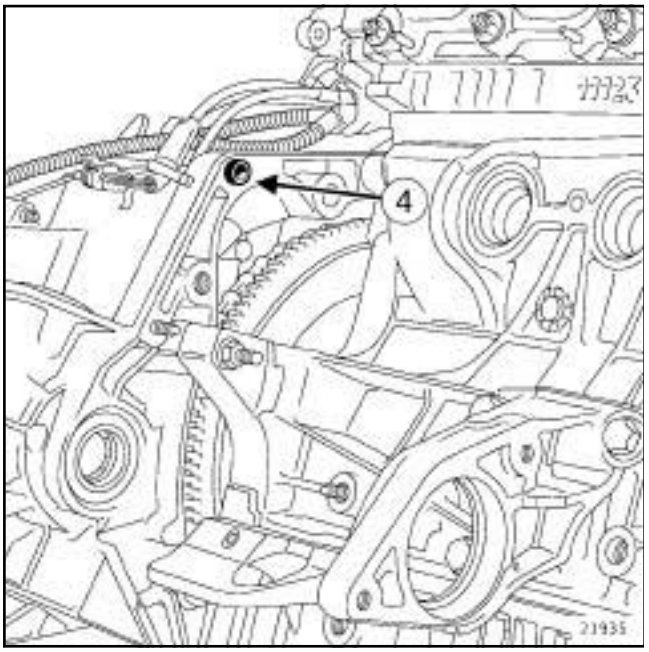

21935

- ❑ Check that the centring dowel (**4**) is in place.
- ❑ Proceed in the reverse order to removal.
- ❑ Torque tighten:
  - the **starter mounting bolts (38 Nm)**,
  - the **catalytic converter downstream stay nut (21 Nm)**,
  - the **heat shield mounting bolts (8.5 Nm)**.
- ❑ Connect the battery (see **Battery : Removal - Refitting**) (MR 364, 80A, Battery).
- ❑ Torque tighten the **battery cover mounting bolts (4 Nm)**.

B84 or C84 or G84 or S84, and K9K, and 728 or 729

Tightening torques ▽	
starter mounting bolts	**44 Nm**
battery cover mounting bolts	**4 Nm**

REMOVAL

❏ Position the vehicle on a two-post lift (see **Vehicle: Towing and lifting**) (MR 364, 02A, Lifting equipment).

❏ Disconnect the battery (see **Battery: Removal - Refitting**) (MR 364, 80A, Battery).

❏ Remove the engine covers.

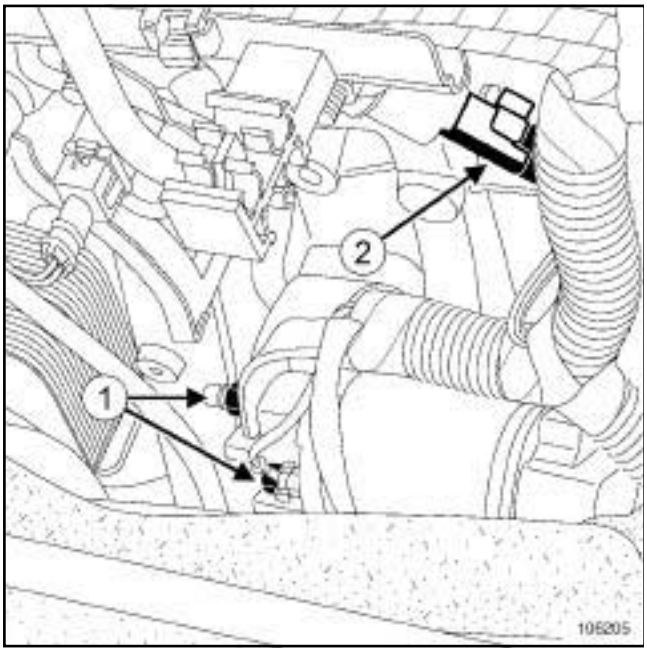

106205

❏ Disconnect:

- the starter electrical connections (**1**)
- the rail pressure sensor (**2**) .

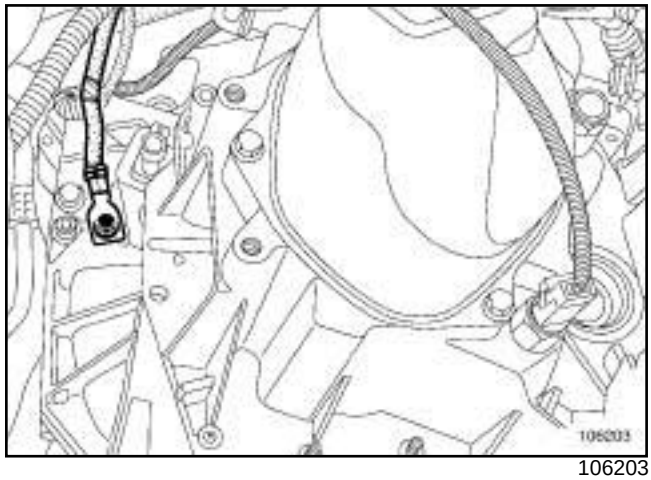

106203

❏ Disconnect the gearbox earth.

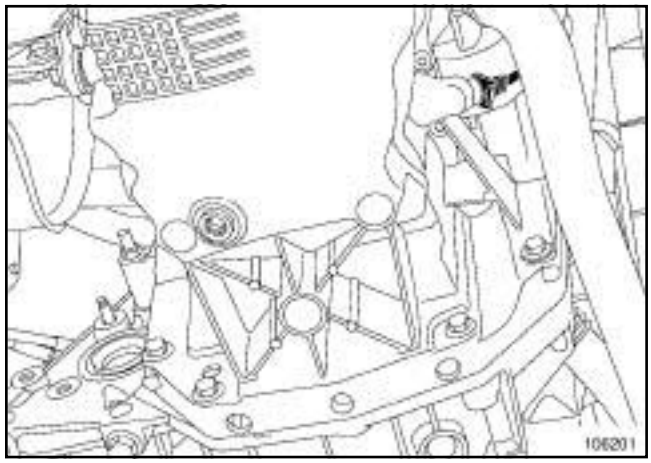

106201

❏ Disconnect the oil level sensor.

B84 or C84 or G84 or S84, and K9K, and 728 or 729

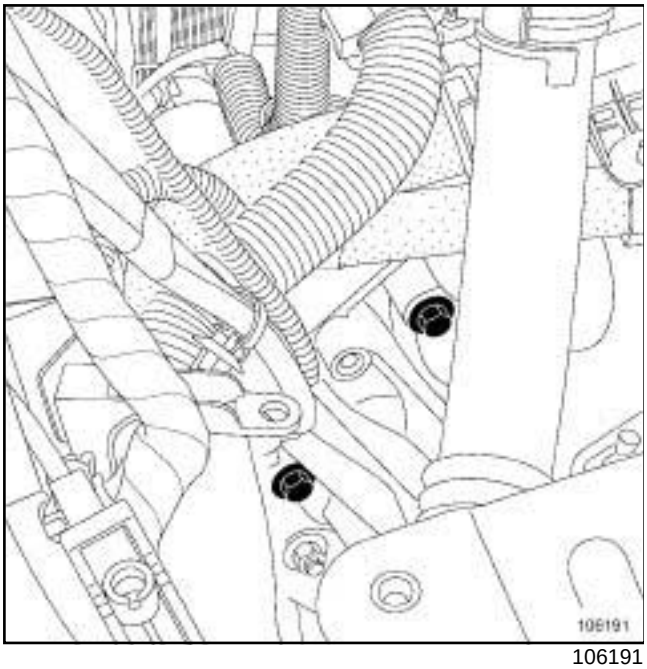

106191

❑ Remove:

- the starter mountings,
- the starter.

REFITTING

❑ Check that the centring dowel is in place.

❑ Proceed in the reverse order to removal.

❑ Tighten to torque the **starter mounting bolts (44 Nm)**.

❑ Connect the battery (see **Battery : Removal - Refitting**) (MR 364, 80A, Battery).

❑ Torque tighten the **battery cover mounting bolts (4 Nm)**.

B84 or C84 or G84 or S84, and F9Q, and 803 or 804 or 816 or 818

Tightening torques ▽	
starter bolts	**44 Nm**
turbocharger oil return pipe mounting bolts	**12 Nm**
battery cover bolts	**4 Nm**
wheel bolts	**110 Nm**

REMOVAL

I - REMOVAL PREPARATION OPERATION

❑ Position the vehicle on a two-post lift (see **Vehicle: Towing and lifting**) (MR 364, 02A, Lifting equipment).

❑ Remove:

- the engine covers,
- the front right-hand wheel,
- the battery (see **Battery: Removal - Refitting**) (MR 364, 80A, Battery),
- the battery tray (see **Battery tray: Removal - Refitting**) (364 MR, 80A, Battery),
- the air hose between the air filter and turbocharger duct,

❑ Remove the catalytic pre-converter (see **19B**, **Exhaust**, **Catalytic pre-converter: Removal - Refitting**, page **19B-29**) .

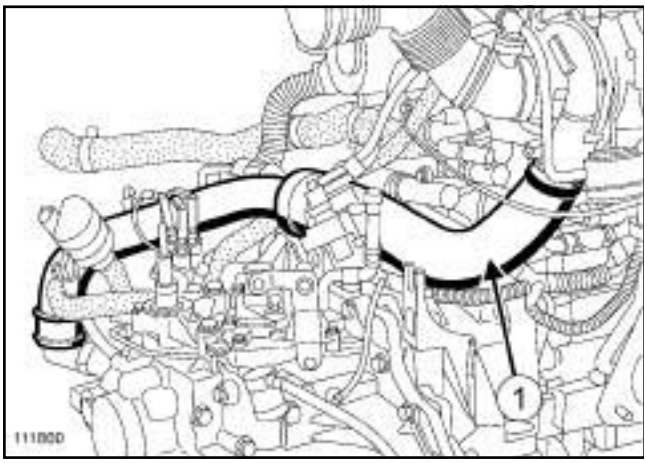

111860

❑ Remove the air duct ***(1)*** from the turbocharger.

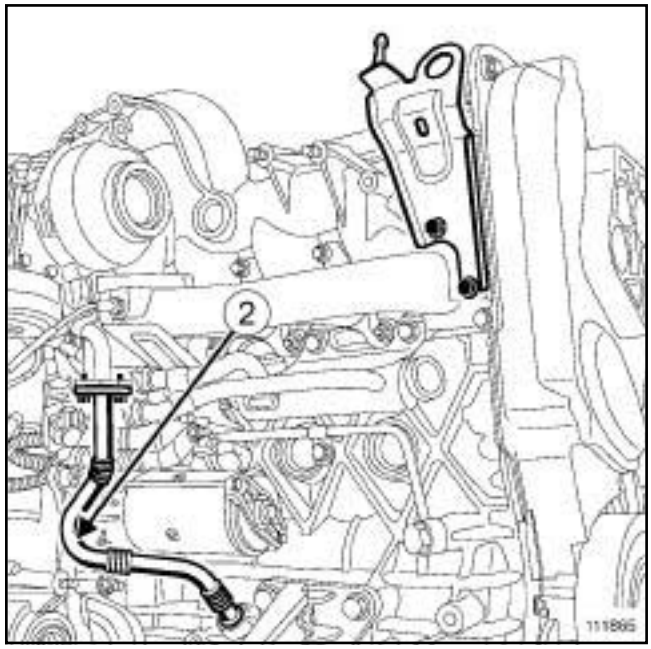

111865

❑ Remove the turbocharger oil return pipe (**2**) .

II - REMOVAL OF PART CONCERNED

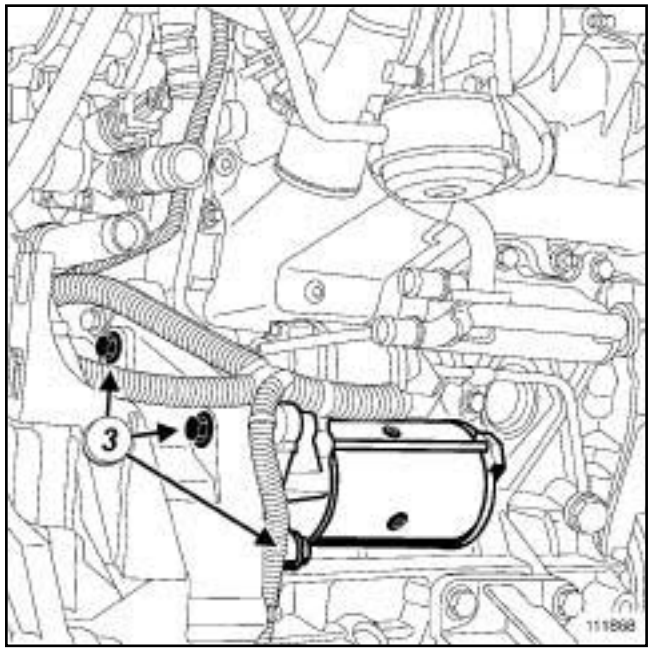

111868

❑ Disconnect the wiring harness from the starter.

❑ Remove the bolts (**3**) from the starter.

❑ Remove the starter.

B84 or C84 or G84 or S84, and F9Q, and 803 or 804 or 816 or 818

REFITTING

I - REFITTING PREPARATIONS OPERATION

❑ Check that the centring dowel is in place.

II - REFITTING OPERATION FOR PART CONCERNED

❑ Refit the starter.

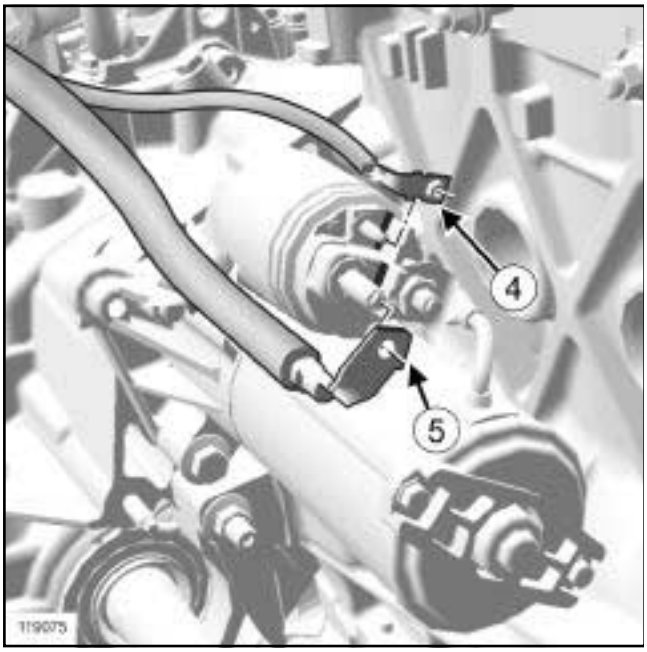

119075

❑ Fit the starter cables in accordance with the fitting positions above:

- the excitation cable terminal flange ***(4)*** to be aligned with the flange facing the solenoid,
- the starter cable terminal flange ***(5)*** to be aligned with the flange facing the solenoid.

❑ Tighten the nuts on the starter cable terminals.

❑ Torque tighten the **starter bolts (44 Nm)**.

III - FINAL OPERATION.

❑ Replace the turbocharger oil return pipe gaskets.

❑ Torque tighten the **turbocharger oil return pipe mounting bolts (12 Nm)**.

❑ Refit the turbocharger air duct.

❑ Refit the catalytic pre-converter (see **Front catalytic pre-converter: Removal - Refitting**) .

❑ Connect the battery (see **Battery: Removal - Refitting**) (MR 364, 80A, Battery).

❑ Torque tighten:

- the **battery cover bolts (4 Nm)**,
- the **wheel bolts (110 Nm)**.

B84 or C84 or E84 or K84 or L84, and M9R

Essential equipment
refrigerant charging station

Tightening torques ▽	
starter bolts	**44 Nm**
front end panel upper bolts	**21 Nm**
front end panel lower bolts	**44 Nm**

REMOVAL

I - REMOVAL PREPARATION OPERATION

❏ Position the vehicle on a two-post lift (see **Vehicle: Towing and lifting**) (MR 364, 02A, Lifting equipment).

❏ Remove:

- the engine cover,
- the engine undertray bolts,
- the engine undertray,
- the battery (see **Battery: Removal - Refitting**) (MR 364, 80A, Battery),
- the front bumper (see **Front bumper: Removal - Refitting**) (MR 365, 55A, Exterior protection).

❏ Drain the refrigerant circuit using the **refrigerant charging station** (see **Coolant circuit Draining - Refilling**) (MR 364, 62A, Air conditioning).

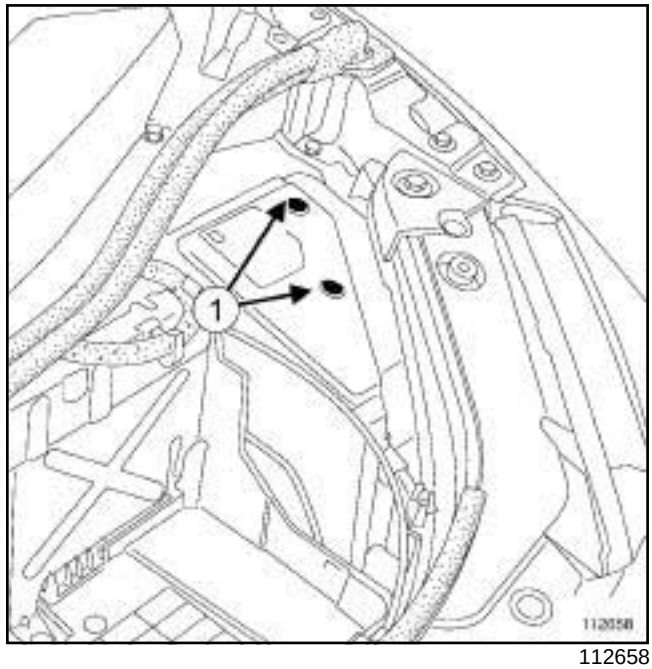

112658

❏ Remove:

- the engine accessories unit cover bolts (**1**) ,
- the engine accessories unit cover.

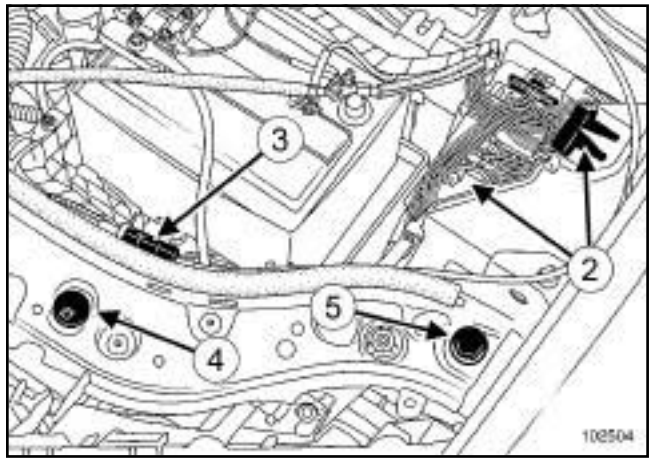

102504

❏ Disconnect the connectors (**2**) from the engine accessories unit.

❏ Unclip the bonnet release cable (**3**) .

❏ Remove:

- the clips (**4**) ,
- the front end panel upper bolts (**5**) .

❏ Disconnect the screen washer pipes.

❏ Remove the battery tray (see **Battery tray: Removal - Refitting**) (MR 364, 80A, Battery).

B84 or C84 or E84 or K84 or L84, and M9R

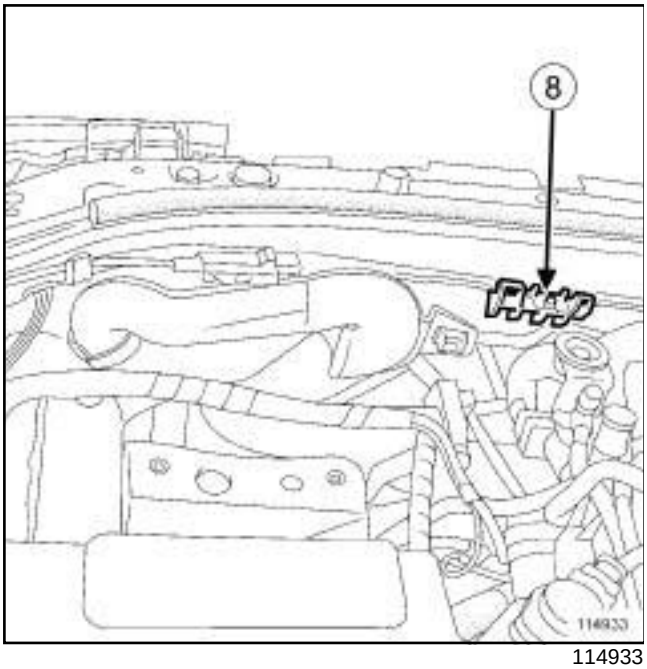

114933

❑ Unclip the air inlet scoop (**8**) .

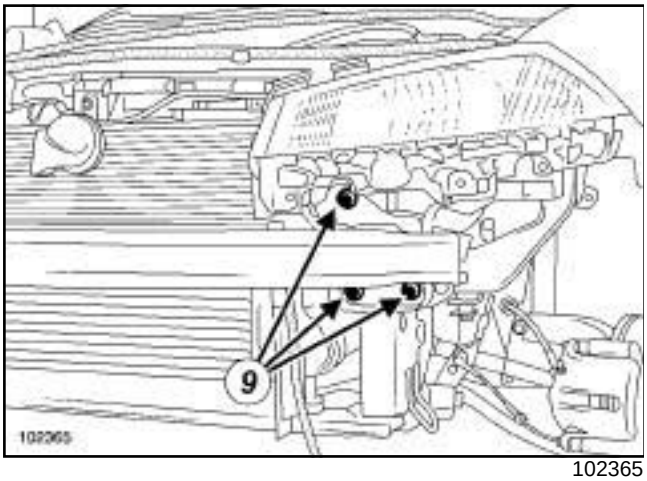

102365

❑ Remove:

- the front end panel lower bolts (**9**) ,
- the front end panel.

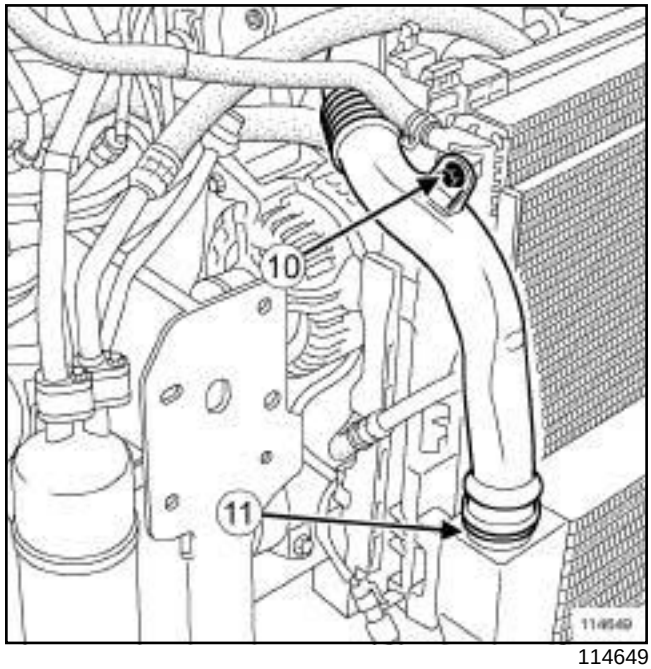

114649

❑ Remove the bolt (**10**) from the intercooler downstream duct on the cooling radiator.

❑ Undo:

- the clip (**11**) securing the intercooler downstream duct on the intercooler,
- the clip securing the intercooler downstream duct on the damper valve.

❑ Move the downstream duct away from the intercooler.

❑ Remove the cooling assembly from its housing and push the assembly forwards.

B84 or C84 or E84 or K84 or L84, and M9R

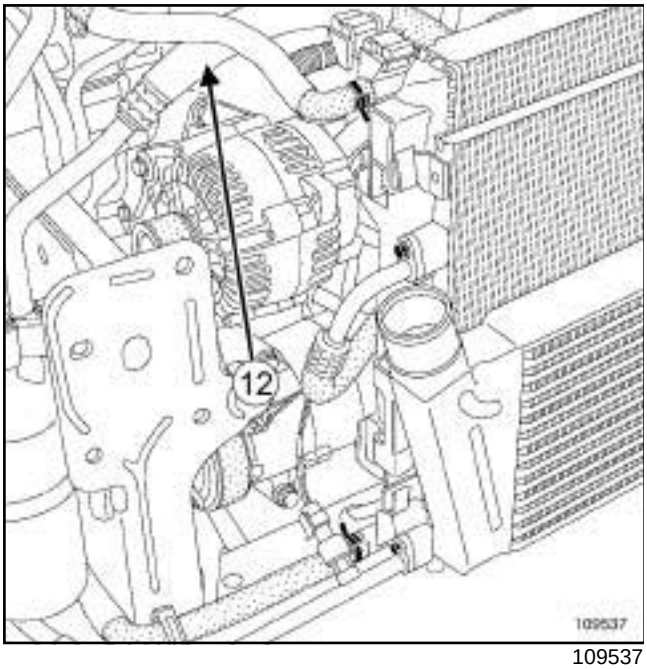

109537

❑ Remove the bolt (**12**) from the air dehydrator reservoir conditioning pipe on the air conditioning compressor.

> Note:
>
> Plugs must be fitted to the pipe and the compressor to prevent moisture from entering the system.

❑ Remove the air dehydration canister conditioning pipe from the air conditioning compressor.

II - OPERATION FOR REMOVAL OF PART CONCERNED

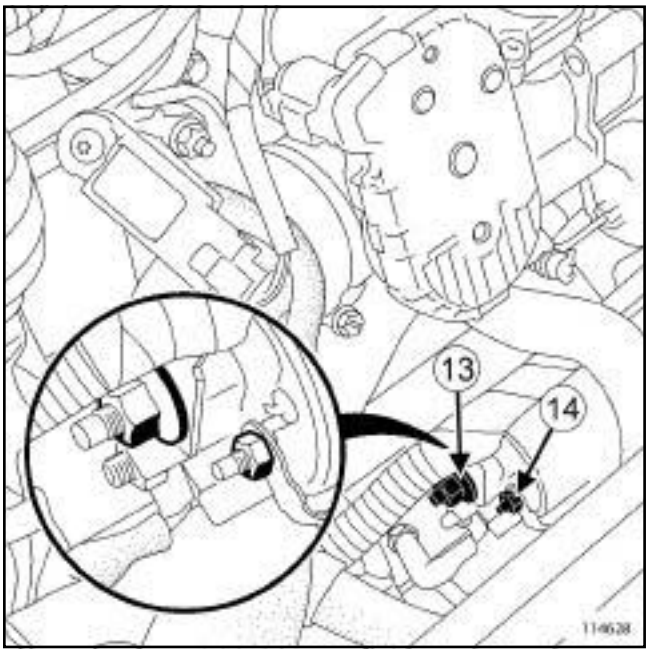

114628

❑ Remove:

- the nut (**13**) from the base of the starter,
- the solenoid exciter nut (**14**) .

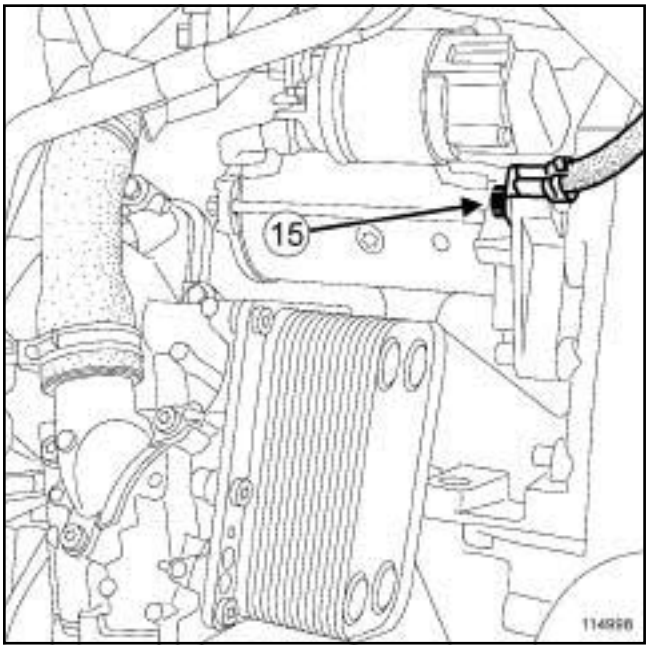

114998

❑ Remove the earth wire bolt (**15**) on the starter.

❑ Move the starter wiring harness to one side.

B84 or C84 or E84 or K84 or L84, and M9R

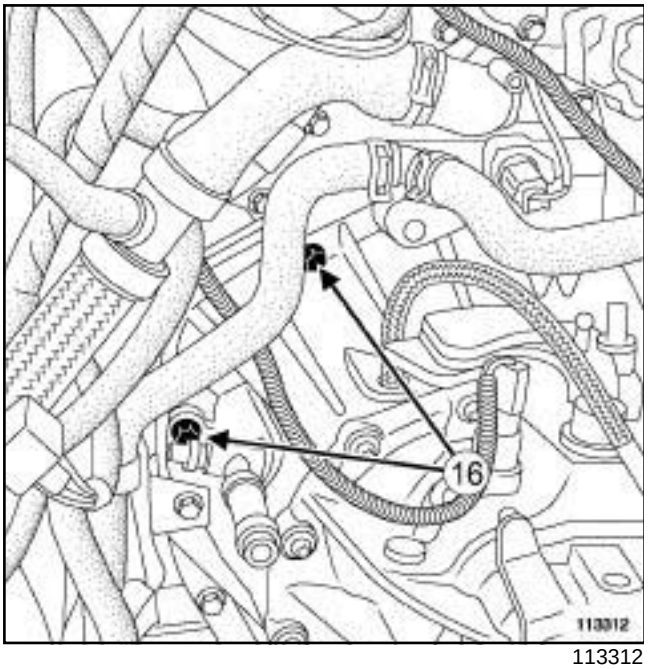

113312

❑ Remove:

- the starter bolts (**16**) ,
- the starter.

REFITTING

I - REFITTING OPERATION FOR PART CONCERNED

❑ Fit the starter.

❑ Torque tighten the **starter bolts (44 Nm)**.

❑ Refit:

- the starter base wire,
- the nut on the base of the starter,
- the solenoid excitation wire,
- the solenoid exciter nut.
- the earth wire,
- the earth wire bolt.

II - FINAL OPERATION.

❑ Refit:

- the air dehydration canister conditioning pipe onto the air conditioning compressor,
- the bolt from the air dehydrator reservoir conditioning pipe on the air conditioning compressor.

❑ Fit the cooling assembly.

❑ Refit:

- the intercooler downstream duct onto the intercooler and damper valve,
- the intercooler downstream duct mounting bolt onto the cooling radiator.

❑ Refit:

- the front end panel,
- the front end panel bolts.

❑ Torque tighten:

- the **front end panel upper bolts (21 Nm)**,
- the **front end panel lower bolts (44 Nm)**.

❑ Clip:

- the air inlet scoop,
- the bonnet opening cable.

❑ Refit the battery tray (see **Battery tray: Removal - Refitting**) (MR 364, 80A, Battery).

❑ Connect:

- the screen washer pipes,
- the engine accessories unit connectors.

❑ Refit:

- the clips,
- the engine accessories unit cover bolts,
- the front bumper (see **Front bumper: Removal - Refitting**) (MR 365, 55A, Exterior protection),
- the engine undertray,
- the engine undertray bolts,
- the battery (see **Battery: Removal - Refitting**) (MR 364, 80A, Battery),
- the engine cover.

❑ Fill the refrigerant circuit using the **refrigerant charging station** (see **Coolant circuit Draining - Refilling**) (MR 364, 62A, Air conditioning).

B84 or C84 or G84 or S84, and K9K, and 724 or 732 or 734

Tightening torques ▽	
starter bolts	**44 N.m**
starter excitation cable nut	**5 N.m**
starter supply cable nut	**8 N.m**

REMOVAL

I - REMOVAL PREPARATION OPERATION

❏ Position the vehicle on a two-post lift (see **Vehicle: Towing and lifting**) (02A, Lifting equipment).

❏ Remove the front engine cover.

❏ Disconnect the battery (see **Battery: Removal - Refitting**) (80A, Battery).

❏ Remove the engine undertray.

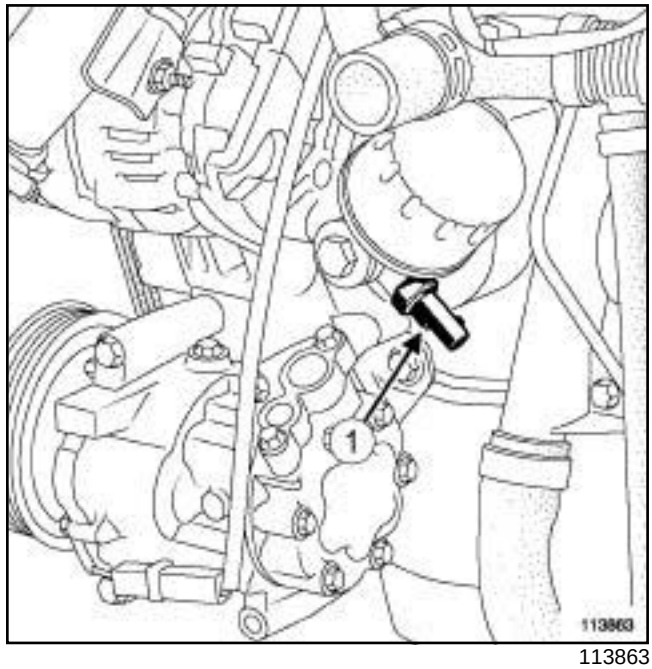

113863

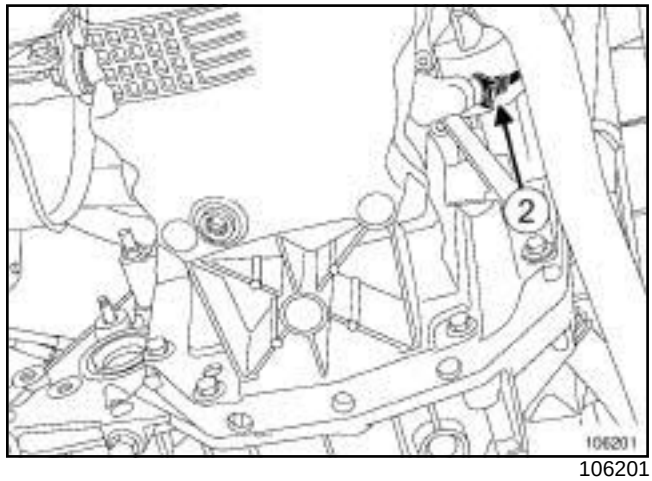

106201

❏ Disconnect:

- the connector (**1**) from the oil pressure sensor,
- the connector (**2**) from the oil level sensor.

❏ Unclip the diesel evacuation pipe.

B84 or C84 or G84 or S84, and K9K, and 724 or 732 or 734

II - OPERATION FOR REMOVAL OF PART CONCERNED

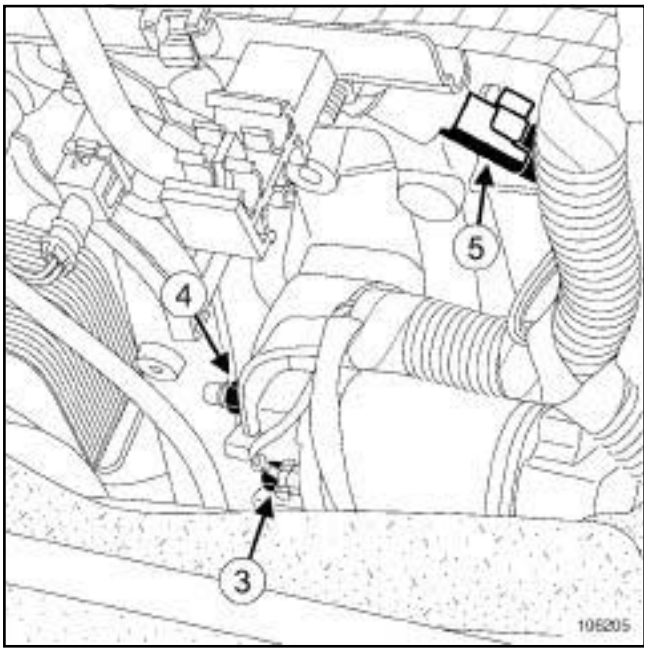

106205

❑ Remove:

- the starter excitation cable nut (**3**) ,
- the starter supply cable nut (**4**) .

❑ Disconnect the injector rail pressure sensor connector (**5**) .

❑ Move the electrical wiring against the cylinder block.

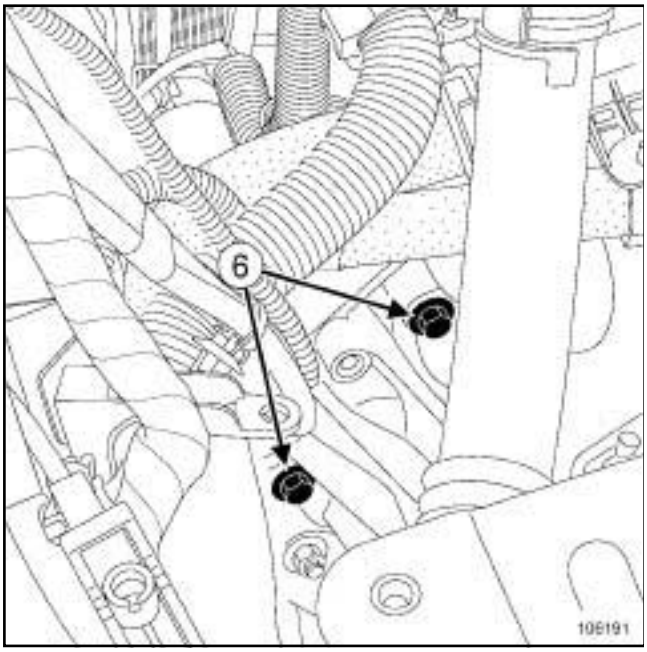

106191

❑ Remove:

- the starter bolts (**6**) ,
- the starter.

REFITTING

I - REFITTING PREPARATION OPERATION

❑ Check that the centring dowel is in place.

II - REFITTING OPERATION FOR PART CONCERNED

❑ Refit:

- the starter,
- the starter bolts.

❑ Torque tighten the **starter bolts (44 N.m)**.

❑ Fit the electrical wiring on the starter.

❑ Tighten to torque:

- the **starter excitation cable nut (5 N.m)**,
- the **starter supply cable nut (8 N.m)**.

III - FINAL OPERATION

❑ Clip the diesel evacuation pipe into place.

❑ Connect:

- injector rail pressure sensor connector,
- the oil level sensor connector,
- the oil pressure sensor connector.

❑ Refit the engine undertray.

❑ Connect the battery (see **Battery : Removal - Refitting**) (80A, Battery).

❑ Refit the engine cover.

B84 or C84, and F4R, and 774

Tightening torques ▽	
starter mountings	**38 Nm**
catalytic converter downstream stay nut	**44 Nm**
heat shield mountings	**8.5 Nm**

REMOVAL

❑ Disconnect the battery (see **Battery: Removal - Refitting**) (MR 364, 80A, Battery).

❑ Removal of the starter requires that the engine is removed (see **10A**, **Engine and cylinder block assembly**, **Engine/gearbox assembly: Removal - Refitting**, page **10A-97**) .

❑ Remove the catalytic converter (see **19B**, **Exhaust**, **Catalytic converter: Removal - Refitting**, page **19B-46**) .

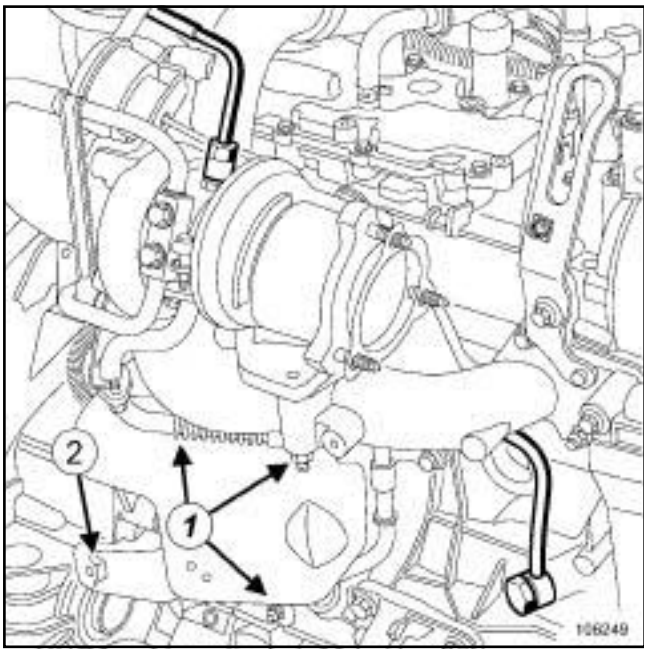

106249

❑ Remove:

- the heat shield mountings (**1**) ,
- the heat shield,
- the catalytic converter downstream strut (**2**) .

❑ Disconnect the starter supply.

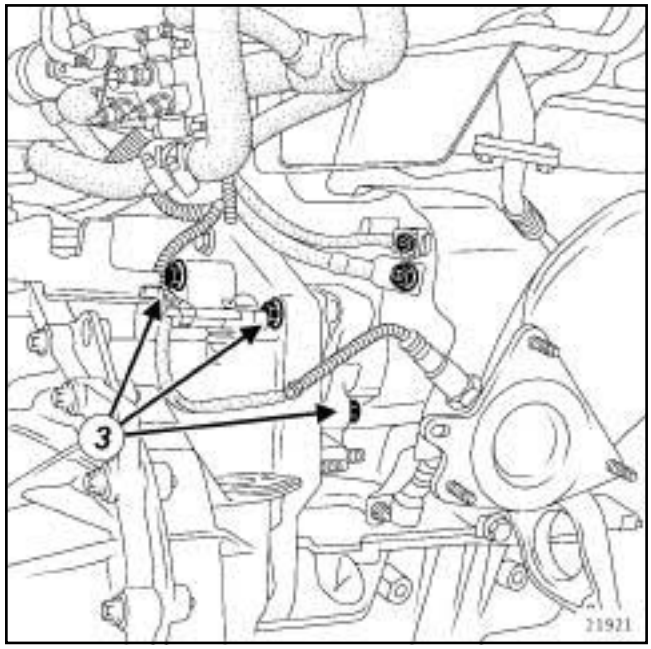

21921

❑ Remove:

- the starter mountings (**3**) ,
- the starter.

B84 or C84, and F4R, and 774

REFITTING

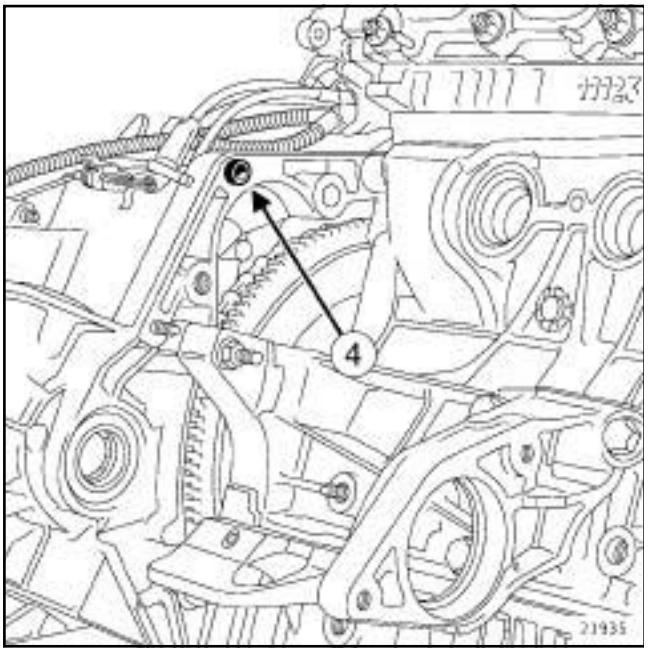

21935

- ❑ Check that the centring dowel (**4**) is in place.
- ❑ Proceed in the reverse order to removal.
- ❑ Torque tighten:
  - the **starter mountings (38 Nm)**,
  - the **catalytic converter downstream stay nut (44 Nm)**,
  - the **heat shield mountings (8.5 Nm)**.
- ❑ Connect the battery (see **Battery : Removal - Refitting**) (MR 364, 80A, Battery).

Alternator pulley: Removal - Refitting

K4J or K4M or K9K

Essential special tooling	
Mot. 1732	Kit for replacing alternator freewheels.
Mot. 1691	Kit for replacing the alternator freewheel pulley.

Essential equipment
pneumatic or electric wrench
torque wrench
open-ended spanner for torque wrench

Tightening torques ▽	
alternator pulley	**80 N.m**

I - REMOVAL PREPARATION OPERATION

❑ Position the vehicle on a two-post lift (see **Vehicle: Towing and lifting**) .

❑ Disconnect the battery (see **Battery: Removal - Refitting**) .

❑ Remove:

- the accessories belt (see **11A**, **Top and front of engine**, **Accessories belt: Removal - Refitting**, page **11A-4**) ,
- the alternator (see **16A**, **Starting - Charging**, **Alternator: Removal - Refitting**, page **16A-3**) .

II - REMOVAL OPERATION FOR THE ALTERNATOR PULLEY

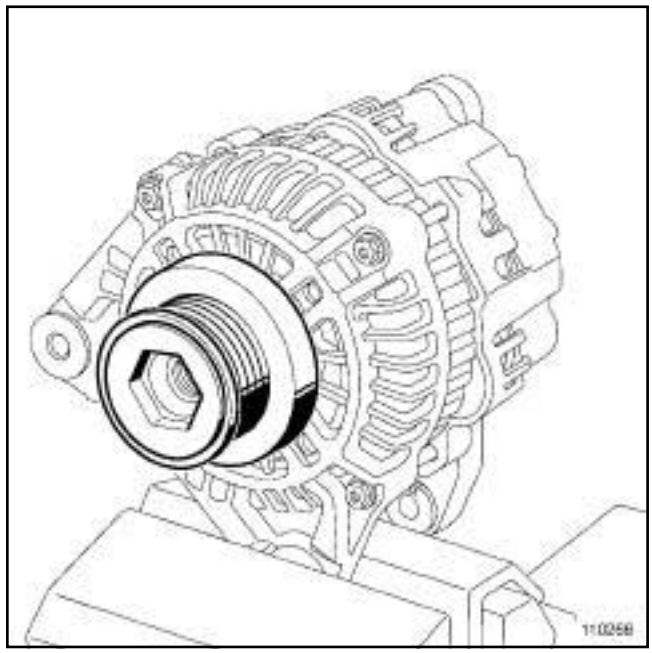

110266

❑ Unclip the alternator pulley protector (if equipped).

❑ Place the alternator in a vice jaw.

K4J or K4M or K9K

Mot. 1732

110276

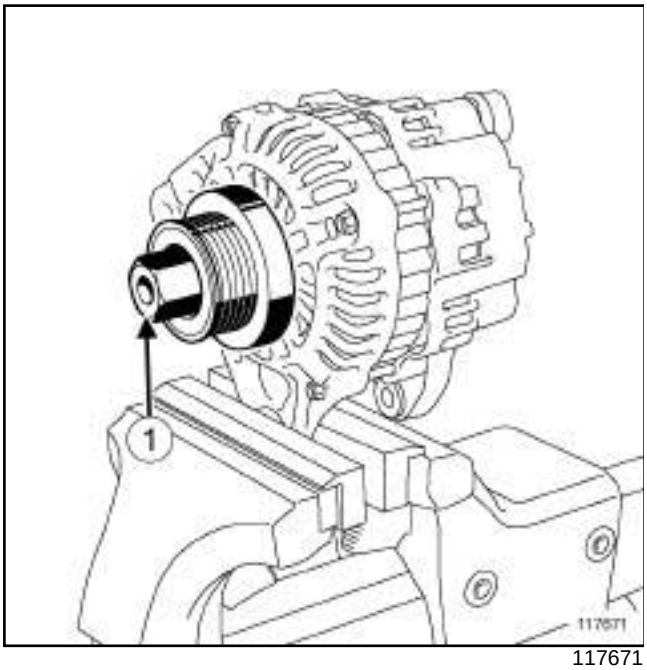

117671

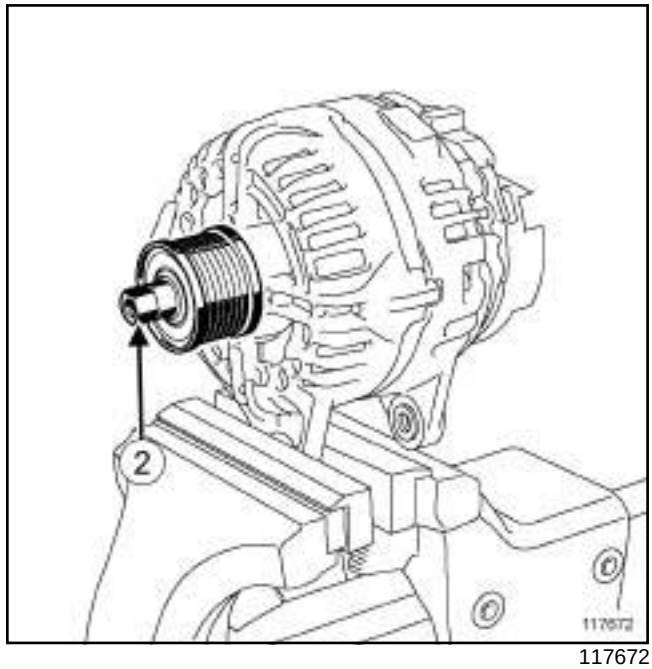

117672

❑ Position the hexagonal socket (**1**) or the splined socket (**2**) from the kit **(Mot. 1732)** or **(Mot. 1691)** in the alternator pulley (depending on the version).

K4J or K4M or K9K

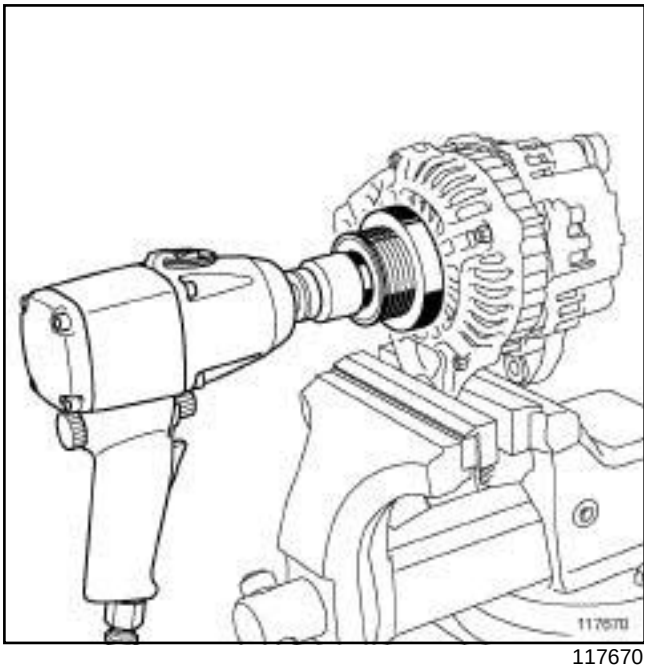

117670

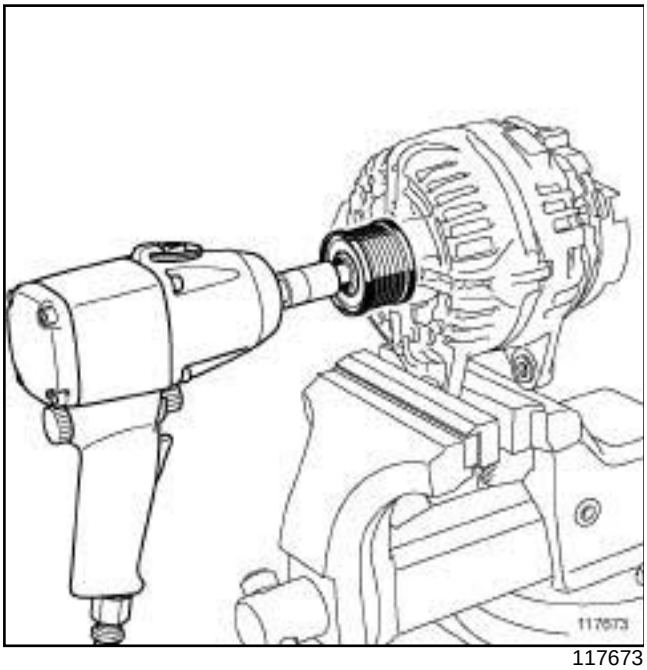

117673

❑

Note:

Always use a pneumatic or electric impact wrench to loosen the alternator pulley

Loosen the alternator pulley using a **pneumatic or electric wrench**.

❑

Remove:

- the tools,
- the alternator pulley.

III - REFITTING PREPARATION OPERATION

❑ **parts always to be replaced: Accessories belt (10,10,01,03)**

parts always to be replaced: Accessories fixed roller (10,10,01,06)

parts always to be replaced: Accessories belt tensioning roller (10,10,01,04)

parts always to be replaced: Accessories tensioning roller bolt (10,10,01,09)

parts always to be replaced: Alternator pulley (32,02,01,01)

K4J or K4M or K9K

IV - REFITTING OPERATION FOR THE ALTERNATOR PULLEY

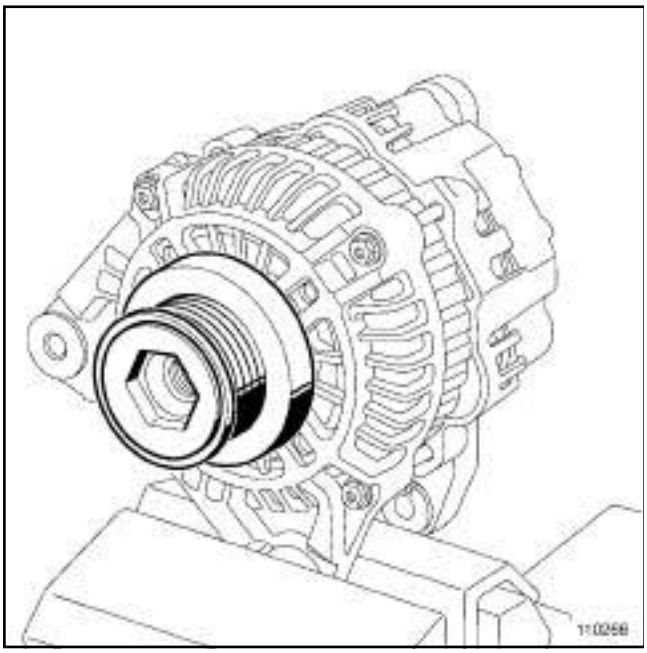

110266

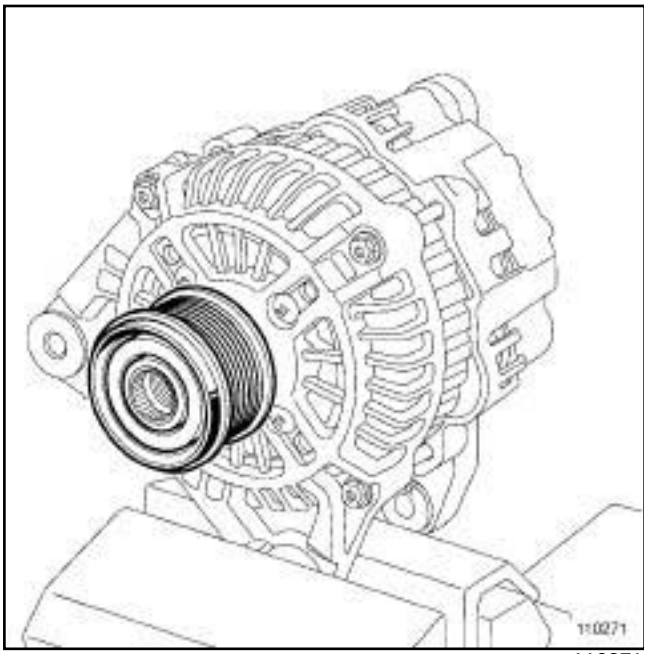

110271

❑ Tighten the new alternator pulley.

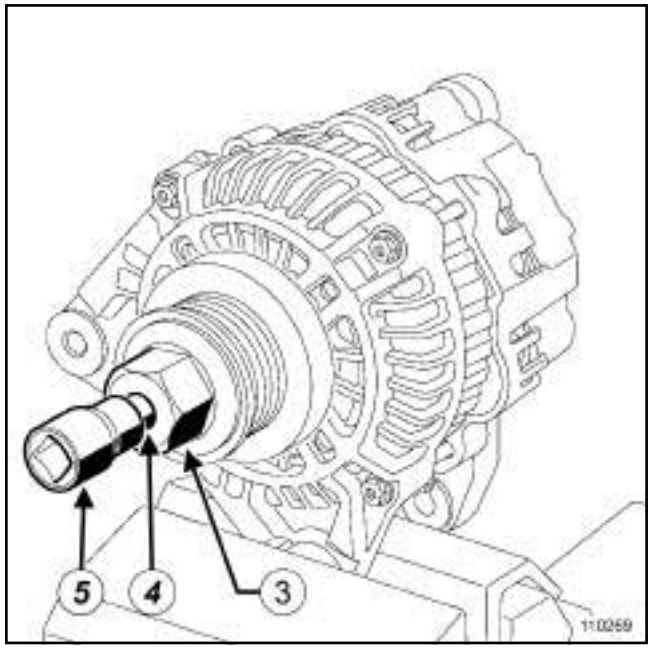

110269

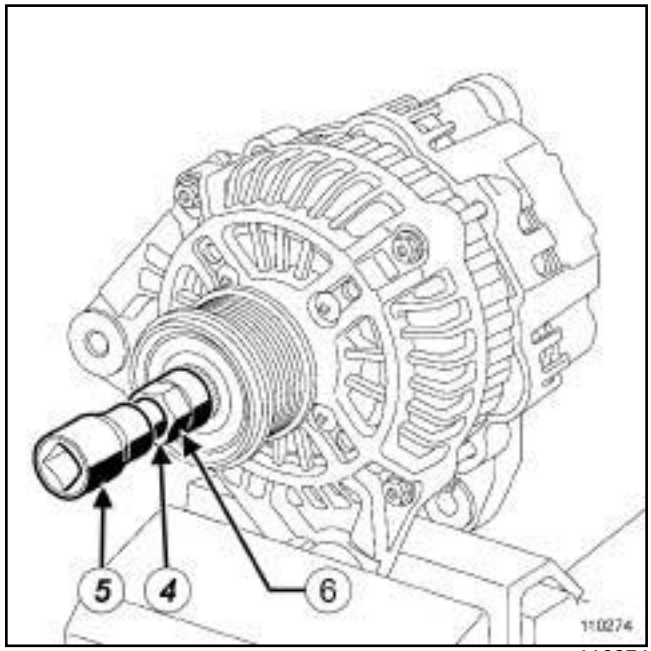

110274

❑ Position:

- the hexagonal socket (**3**) or the splined socket (**6**) in the alternator pulley (depending on the version),
- the end piece (**4**) in the recess of the alternator rotor,
- the end piece holder (**5**) on the end piece.

K4J or K4M or K9K

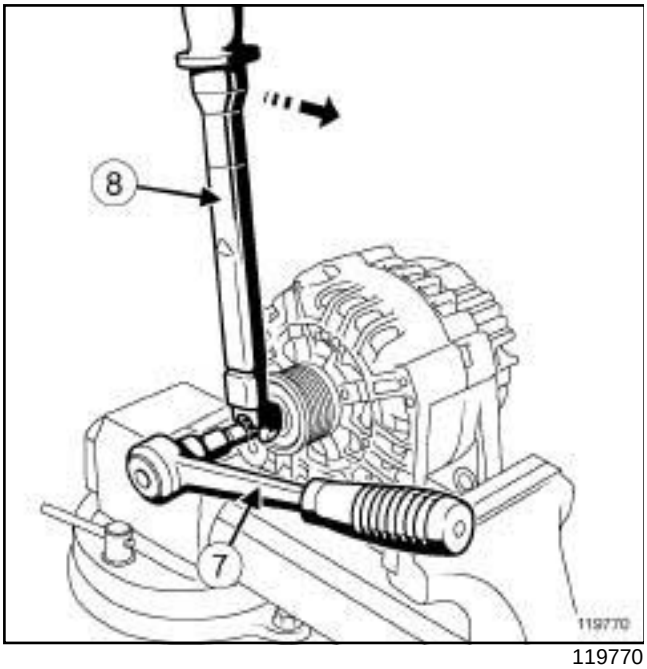

119770

- Immobilise the alternator rotor using the spanner (**7**) .
- Torque tighten the **alternator pulley (80 N.m)** using the **torque wrench** (**8**) equipped with a **15mm open-ended spanner for torque wrench**.
- Remove the.
- Clip the new protector onto the alternator pulley (if equipped).

V - FINAL OPERATION

- Refit:
  - the alternator (see **16A**, **Starting - Charging**, **Alternator: Removal - Refitting**, page **16A-3**) ,
  - the accessories belt (see **11A**, **Top and front of engine**, **Accessories belt: Removal - Refitting**, page **11A-4**) .
- Connect the battery (see **Battery : Removal - Refitting**) .

F4R, and 770 or 771 or 774 or 776 – B84 or C84 or G84 or K84 or L84 or S84, and K4J – K4M

Tightening torques ▽	
ignition coil bolts	**15 Nm**

The power module is incorporated in the injection computer. The ignition system uses the same sensors as the injection system.

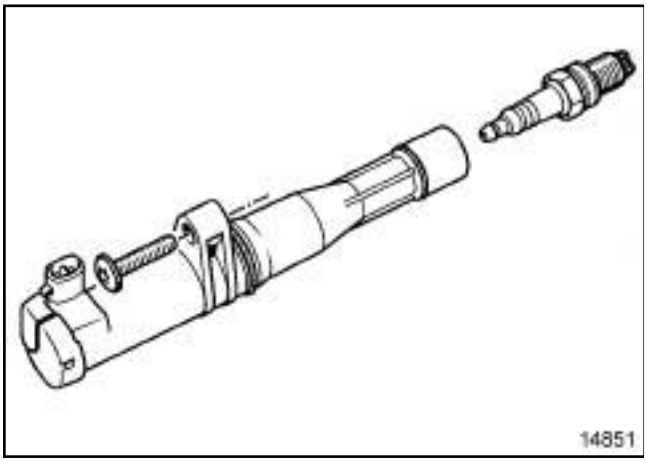

14851

❑ There are four ignition coils, and they are mounted directly onto the spark plug by a bolt on the rocker cover.

❑ The coils are supplied in series two by two by the injection computer:

- track **C M4** for cylinders 1 and 4,
- track **C M3** for cylinders 2 and 3.

REMOVAL

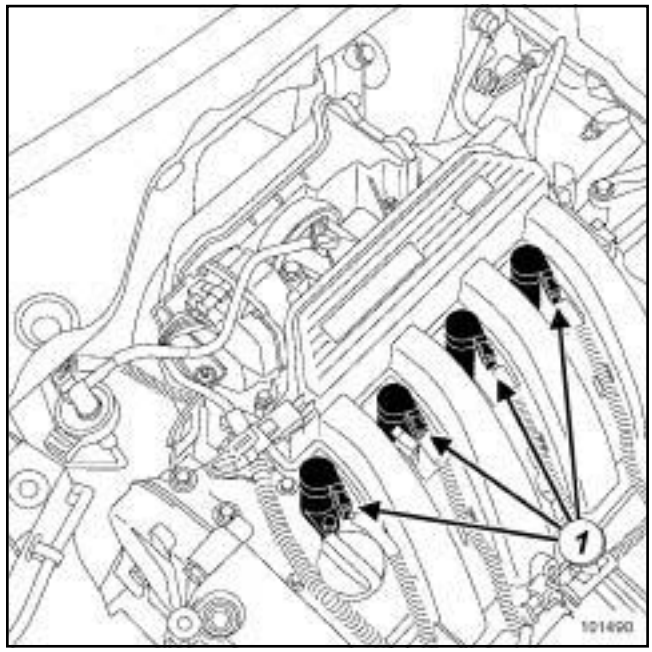

101490

❑ Remove the engine covers.

❑ Disconnect the connectors (**1**) from the ignition coils.

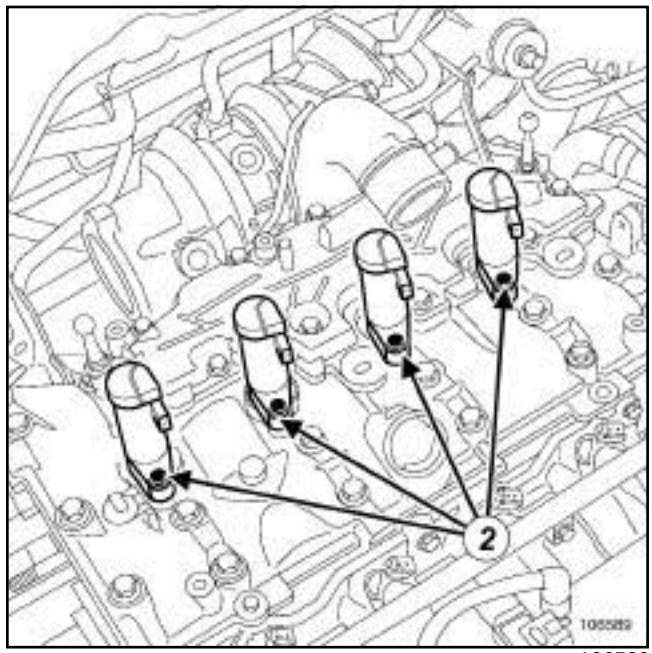

106589

❑ Remove the bolts (**2**) from the ignition coils.

❑

> Note:
>
> Be sure to replace any damaged connectors.

F4R, and 770 or 771 or 774 or 776 – B84 or C84 or G84 or K84 or L84 or S84, and K4J – K4M

REFITTING

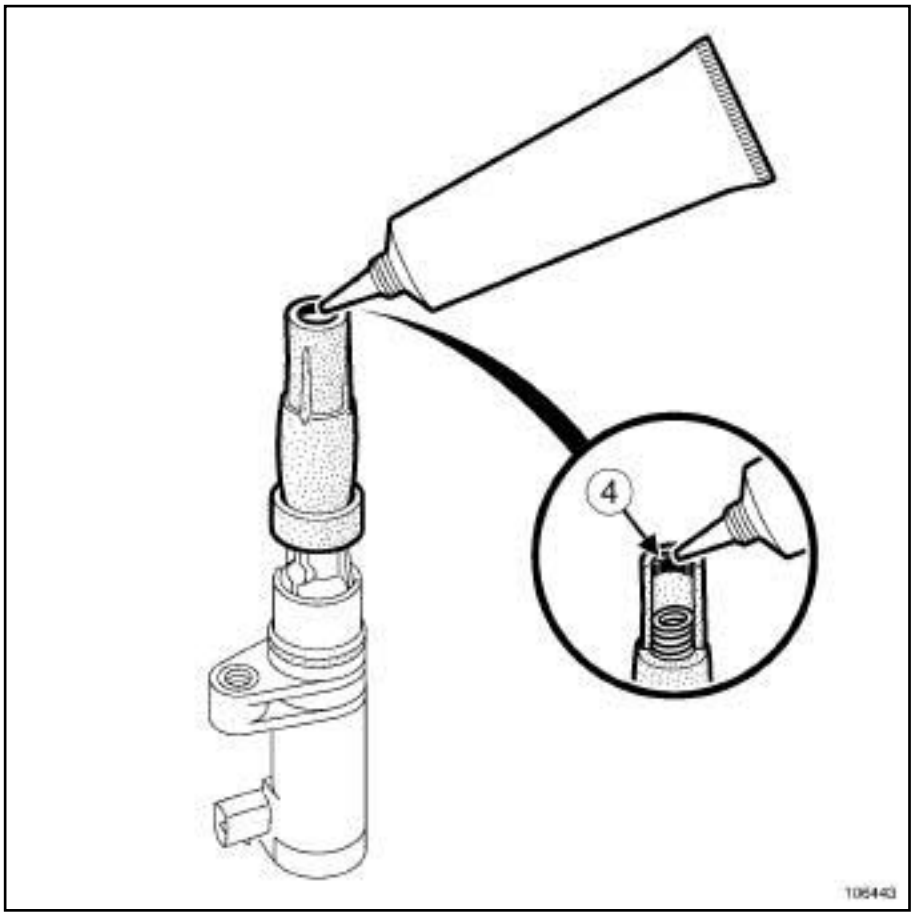

106443

- On the four ignition coils, apply a bead (**4**) of **FLUORINATED GREASE (PART NO. 82 00 168 855)**, **2 mm** in diameter to the inner edge of the high-tension cap.
- If necessary, replace the ignition coil O-rings.
- Torque tighten the **ignition coil bolts (15 Nm)**.
- Connect the ignition coil connectors.

F4R

Essential special tooling	
Ele. 1382	Set of plug wrenches 16 & 21 mm torque 17.5 & 28 N.m + square adapter 9-9.52 for wrench Ele. 1086

Essential equipment
set of feeler gauges

Tightening torques ▽	
spark plugs	**28 N.m**

Spark plug electrode gap

Type of spark plug	Gap (mm)
CHAMPION	0.90 ± 0.05
NGK	0.85 ± 0.05

REMOVAL

I - REMOVAL PREPARATION OPERATION

❑ Remove:

- the engine cover (if fitted),
- the ignition coils (see **17A**, **Ignition**, **Coils Removal - Refitting**, page **17A-1**) .

II - OPERATION FOR REMOVAL OF PART CONCERNED

123172

❑ Remove the spark plugs using the tool **(Ele. 1382)** with the **grey** sleeve.

REFITTING

I - REFITTING PREPARATION OPERATION

❑ Check and, if necessary, correct the spark plug electrode gaps using a **set of feeler gauges**.

II - REFITTING OPERATION FOR PART CONCERNED

❑ Refit the spark plugs.

❑ Torque tighten the **spark plugs (28 N.m)** using **(Ele. 1382)** fitted with the **grey** sleeve.

III - FINAL OPERATION

❑ Refit:

- the ignition coils (see **17A**, **Ignition**, **Coils Removal - Refitting**, page **17A-1**) ,
- the engine cover (if fitted).

F4R or K4J or K4M

Essential special tooling	
Ele. 1382	Set of plug wrenches 16 & 21 mm torque 17.5 & 28 N.m + square adapter 9-9.52 for wrench Ele. 1086

Tightening torques ▽	
spark plugs	**28 N.m**

Spark plug electrode gap

Type of spark plug	Gap (mm)
CHAMPION	0.95 ± 0.05
EYQUEM	0.95 ± 0.05
NGK	0.95 ± 0.05

REMOVAL

I - REMOVAL PREPARATION OPERATION

❑ Remove the ignition coils (see **17A**, **Ignition**, **Coils Removal - Refitting**, page **17A-1**) .

II - OPERATION FOR REMOVAL OF PART CONCERNED

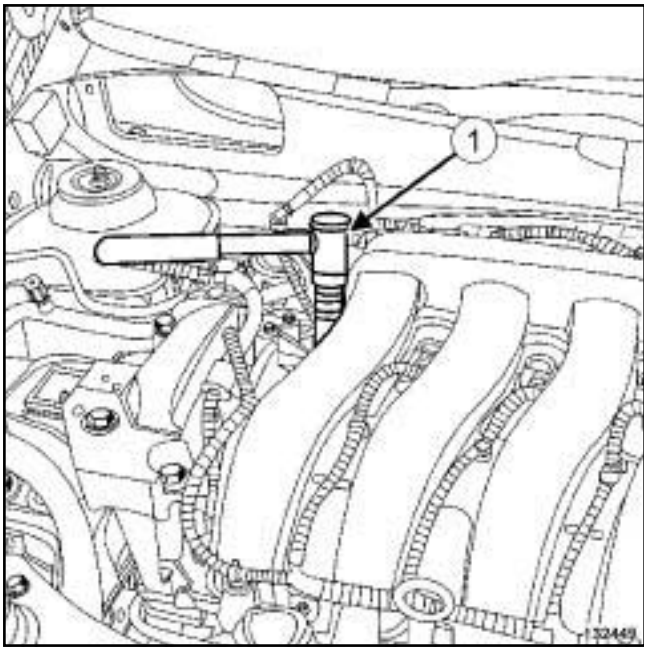

132449

❑ Remove the spark plugs using **(Ele. 1382)** (**1**) .

REFITTING

I - REFITTING PREPARATION OPERATION

❑ Check and, if necessary, correct the electrode gap for each spark plug.

II - REFITTING OPERATION FOR PART CONCERNED

❑ Refit the spark plugs.

❑ Torque tighten the **spark plugs (28 N.m)** using **(Ele. 1382)** fitted with the **grey** sleeve.

III - FINAL OPERATION

❑ Refit the ignition coils (see **17A**, **Ignition**, **Coils Removal - Refitting**, page **17A-1**) .

Fuel injection: List and location of components

B84 or C84, and F4R, and 774

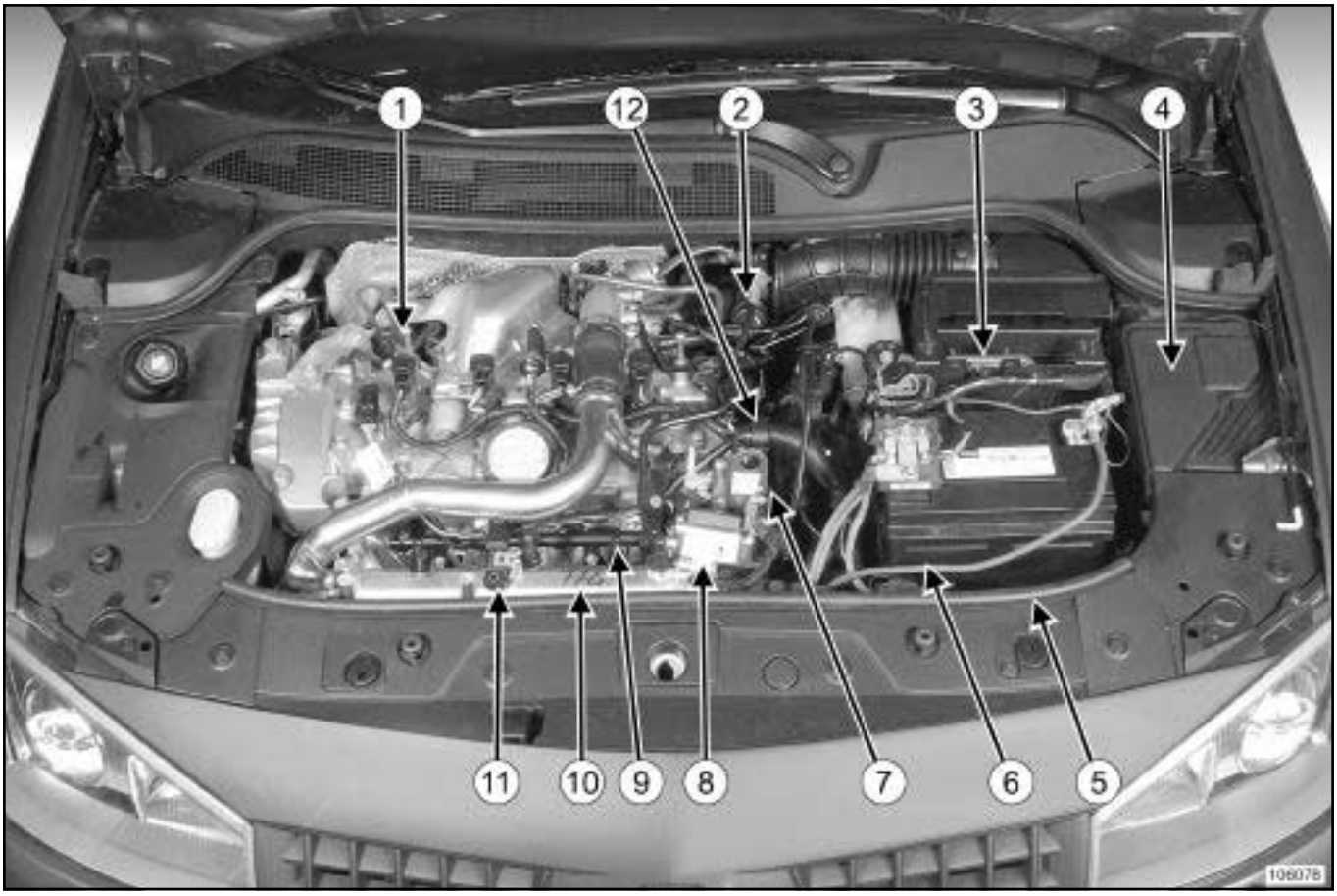

106078

(**1**)	Ignition coil
(**2**)	Fuel vapour recirculation solenoid valve
(**3**)	Injection computer
(**4**)	Protection and Switching Unit
(**5**)	Air temperature sensor
(**6**)	Turbocharger pressure sensor
(**7**)	Coolant temperature sensor
(**8**)	Throttle valve
(**9**)	Injection rail and injectors
(**10**)	Pinking sensor
(**11**)	Manifold pressure sensor
(**12**)	Electric coolant pump

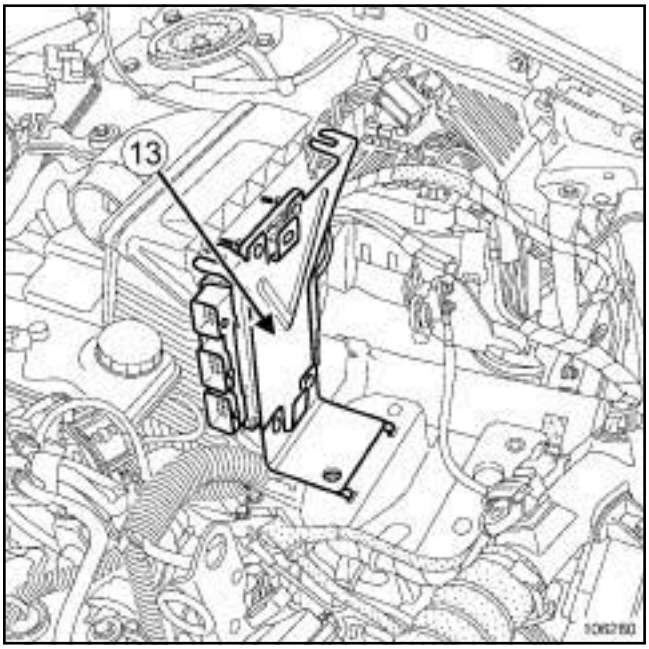

106280

(**13**) Injection computer

B84 or C84, and F4R, and 774

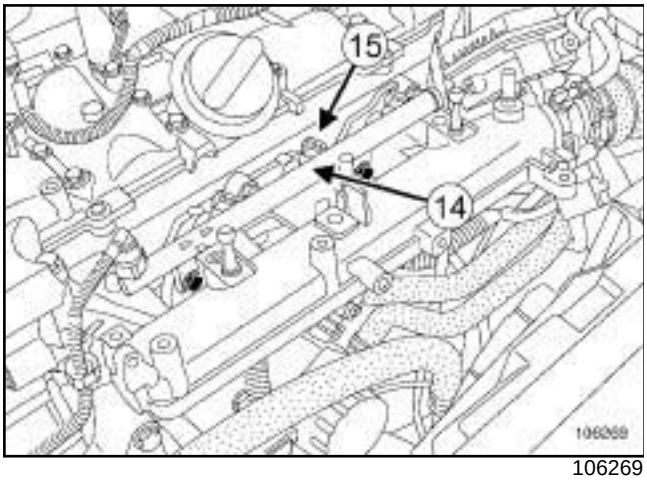

106269

(**14**) Injector rail

(**15**) Injectors

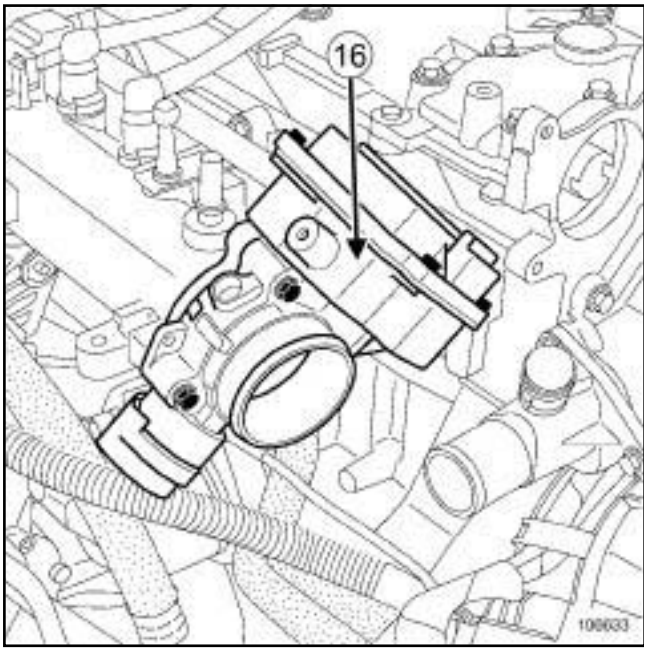

106633

(**16**) Throttle valve

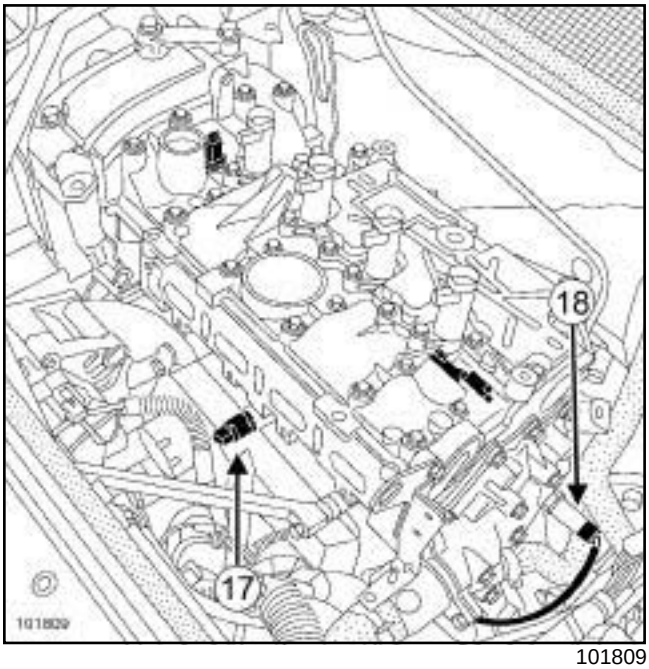

101809

(**17**) Pinking sensor

(**18**) Coolant temperature sensor

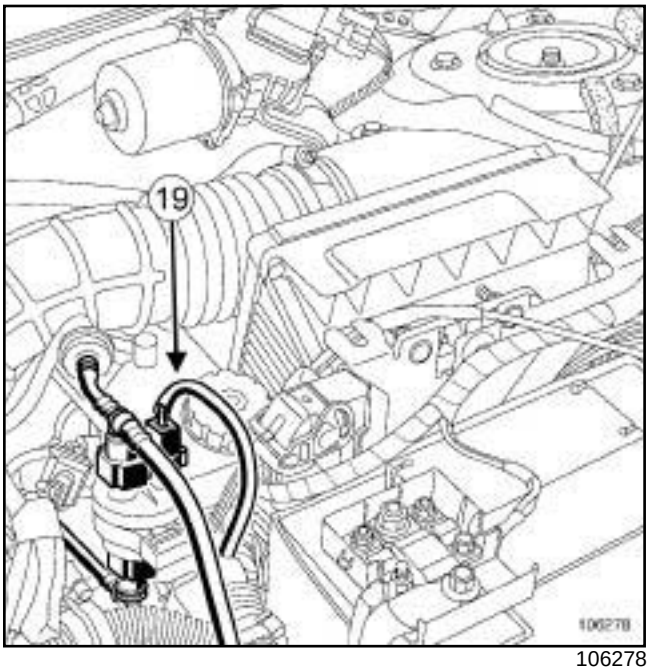

106278

(**19**) Fuel vapour recirculation solenoid valve

B84 or C84, and F4R, and 774

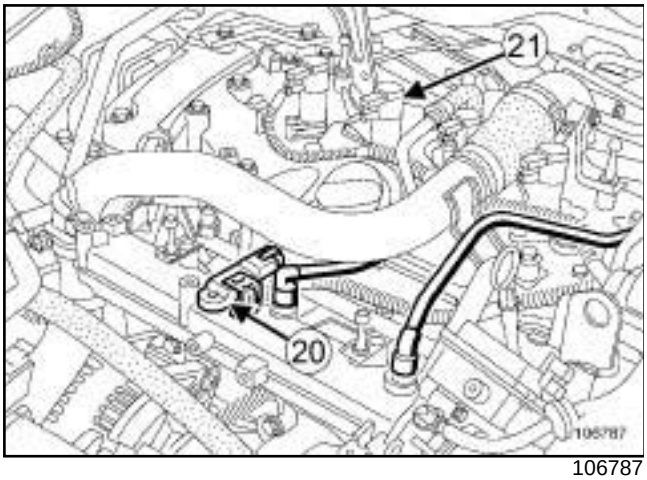

106787

(**20**) Manifold pressure sensor

(**21**) Ignition coils

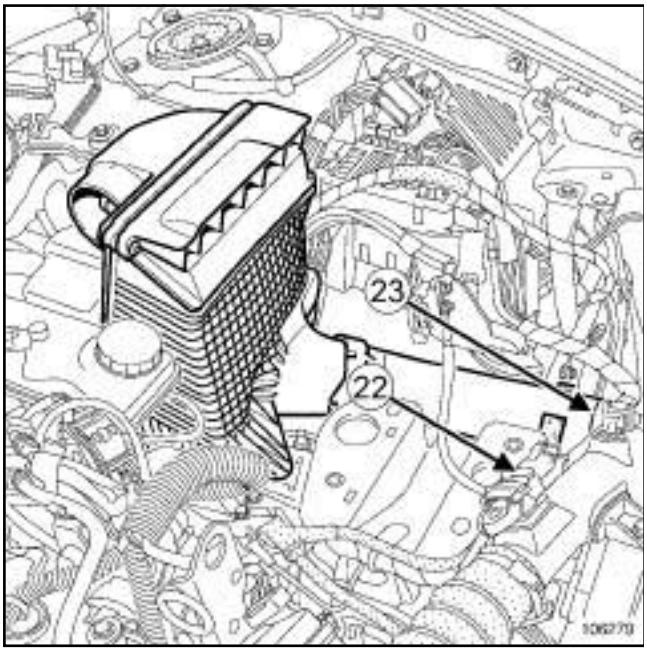

106279

(**22**) Turbocharging pressure sensor

(**23**) Air temperature sensor

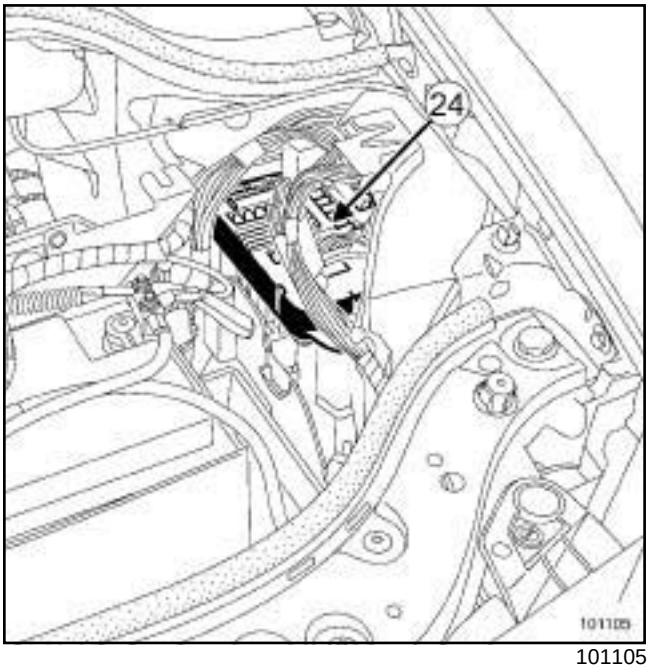

101105

(**24**) Protection and Switching Unit

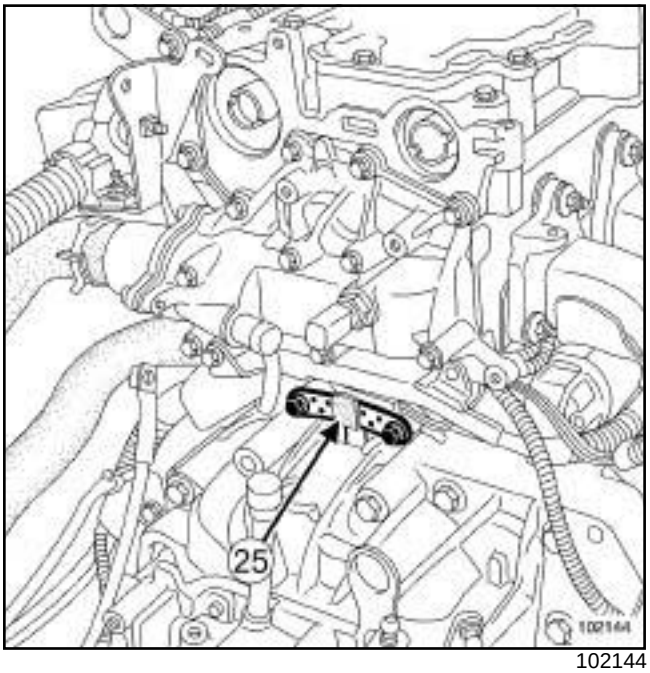

102144

(**25**) Engine speed and position sensor

B84 or C84, and F4R, and 774

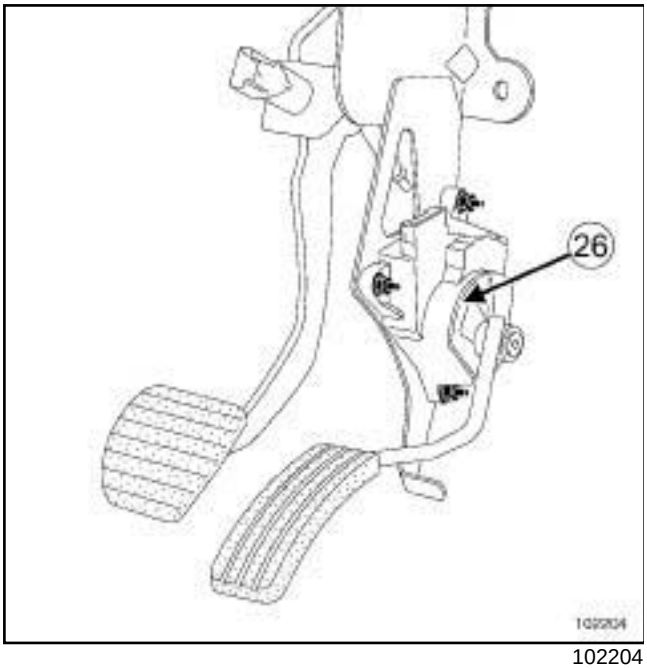

102204

(**26**) Accelerator pedal potentiometer

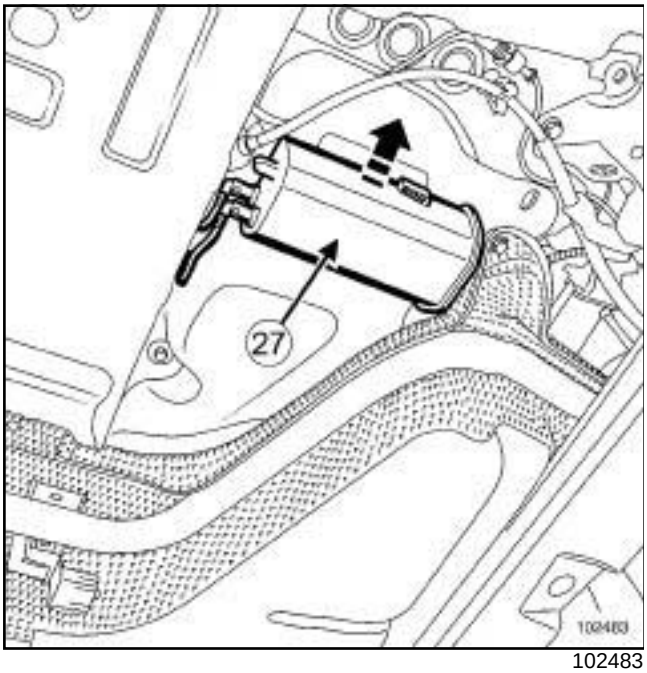

102483

(**27**) Fuel vapour recirculation absorber

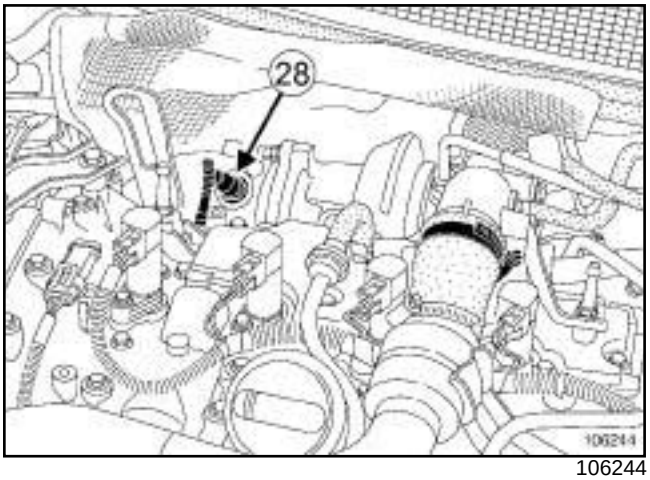

106244

(**28**) Upstream oxygen sensor

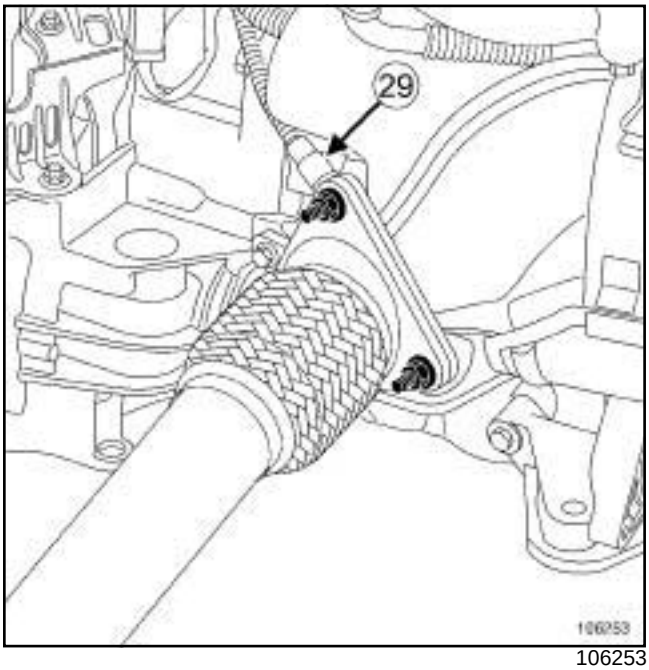

106253

(**29**) Downstream oxygen sensor

B84 or C84 or G84 or S84, and K4M, and 760 or 761 or 788 or 812 or 813

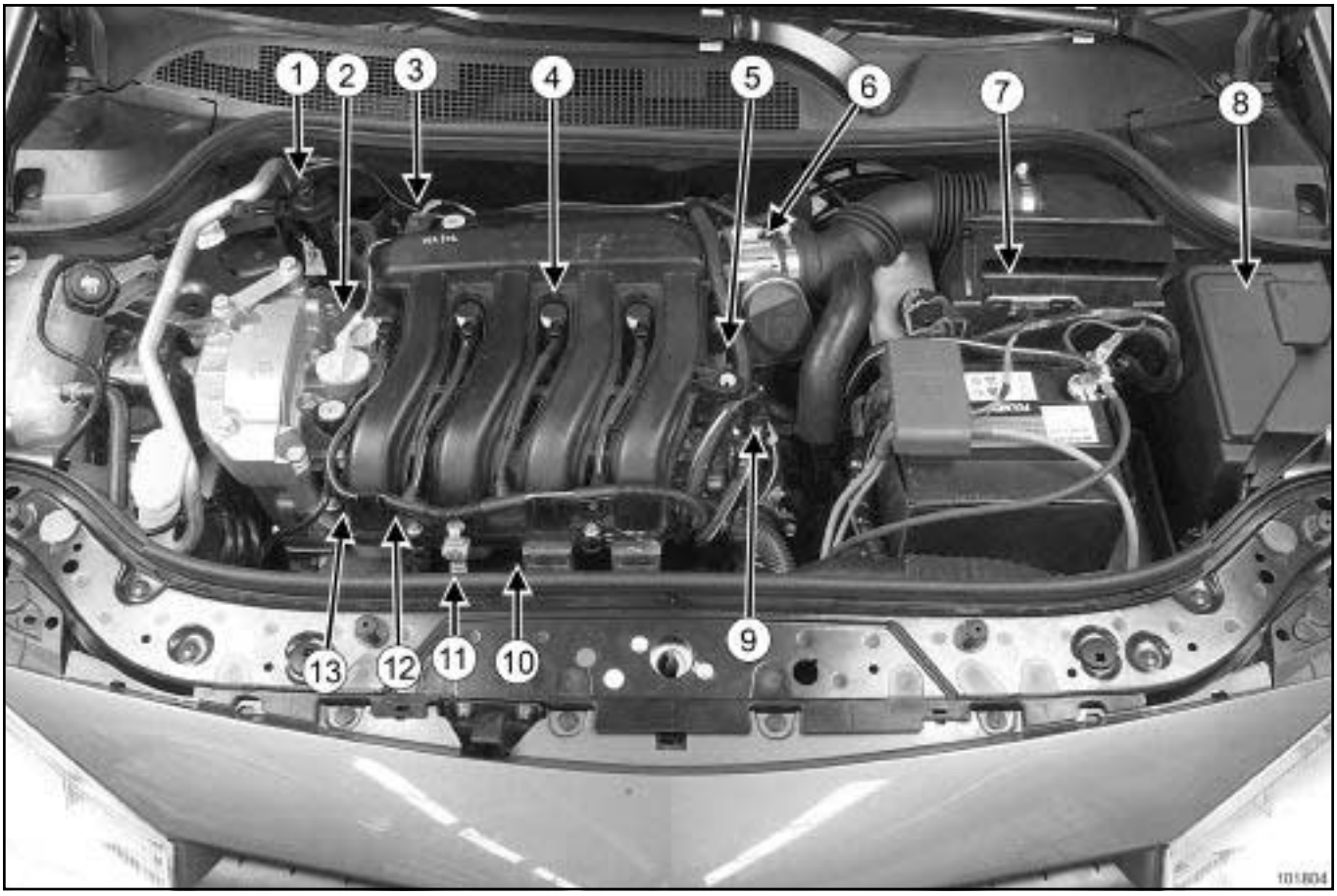

101804

(**1**)	Fuel vapour recirculation solenoid valve
(**2**)	Camshaft dephaser solenoid valve
(**3**)	Manifold pressure sensor
(**4**)	Ignition coil
(**5**)	Camshaft position sensor
(**6**)	Motorised throttle valve
(**7**)	Injection computer
(**8**)	Protection and Switching Unit
(**9**)	Coolant temperature sensor
(**10**)	Pinking sensor
(**11**)	Air temperature sensor
(**12**)	Injectors
(**13**)	Injector rail

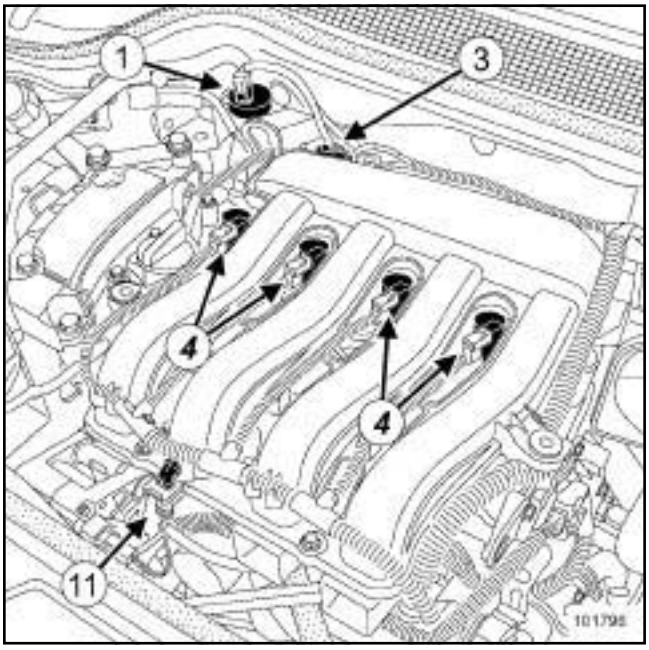

101796

(**1**)	Fuel vapour recirculation solenoid valve
(**3**)	Manifold pressure sensor

B84 or C84 or G84 or S84, and K4M, and 760 or 761 or 788 or 812 or 813

(**4**) Ignition coils

(**11**) Air temperature sensor

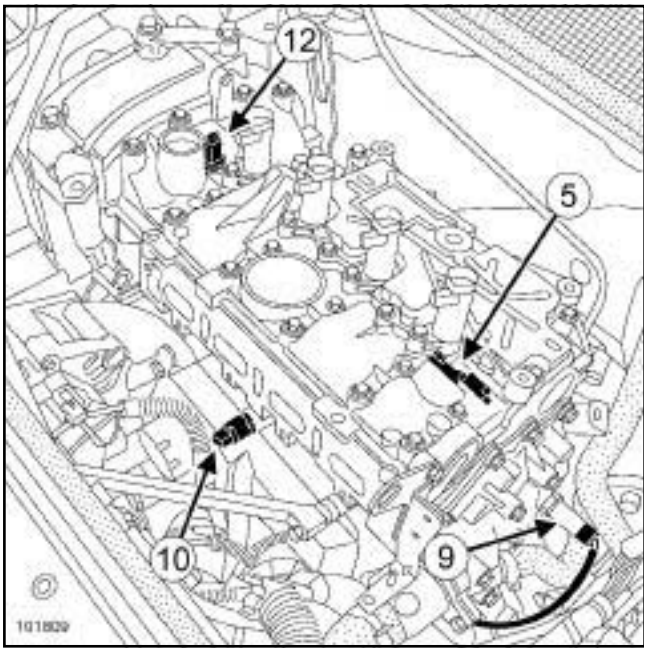

101809

(**5**) Camshaft position sensor

(**9**) Coolant temperature sensor

(**10**) Pinking sensor

(**12**) Camshaft dephaser solenoid valve

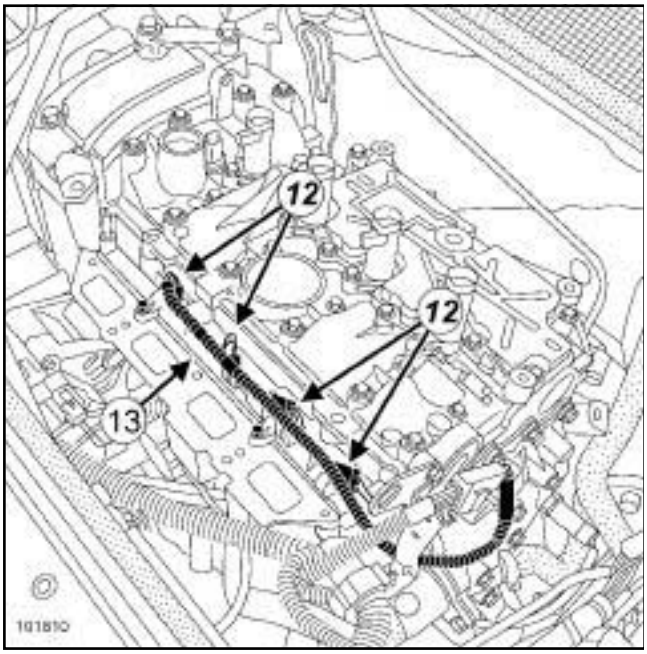

101810

(**12**) Injectors

(**13**) Injector rail

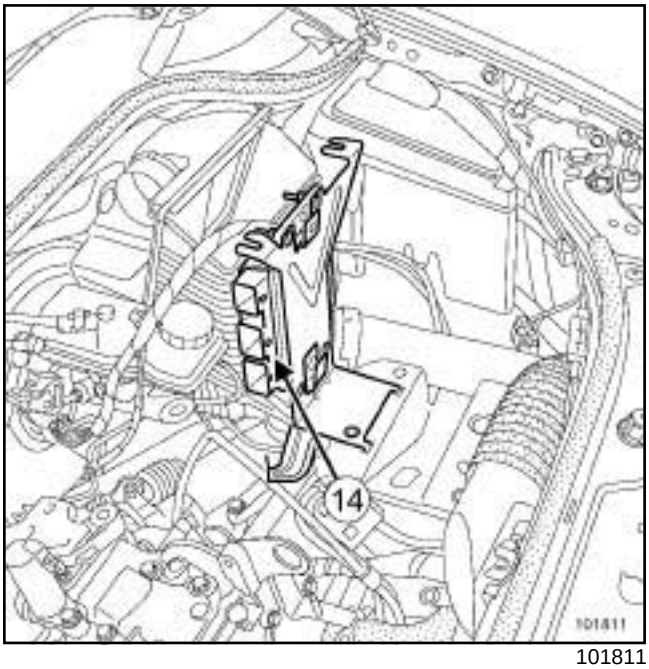

101811

(**14**) Injection computer

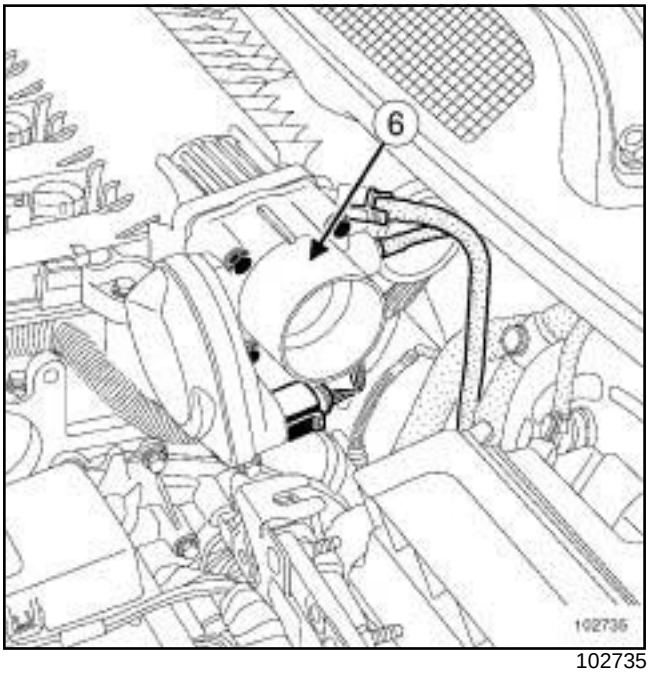

102735

(**6**) Motorised throttle valve

B84 or C84 or G84 or S84, and K4M, and 760 or 761 or 788 or 812 or 813

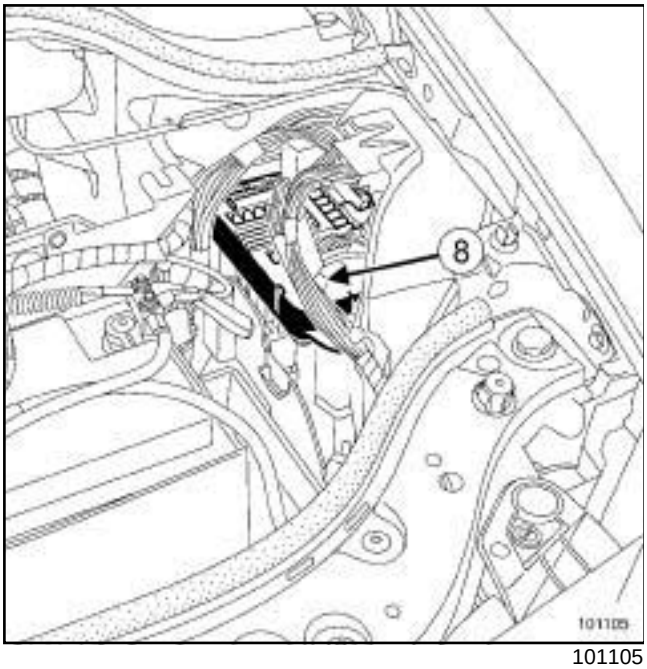

101105

(**8**) Protection and Switching Unit

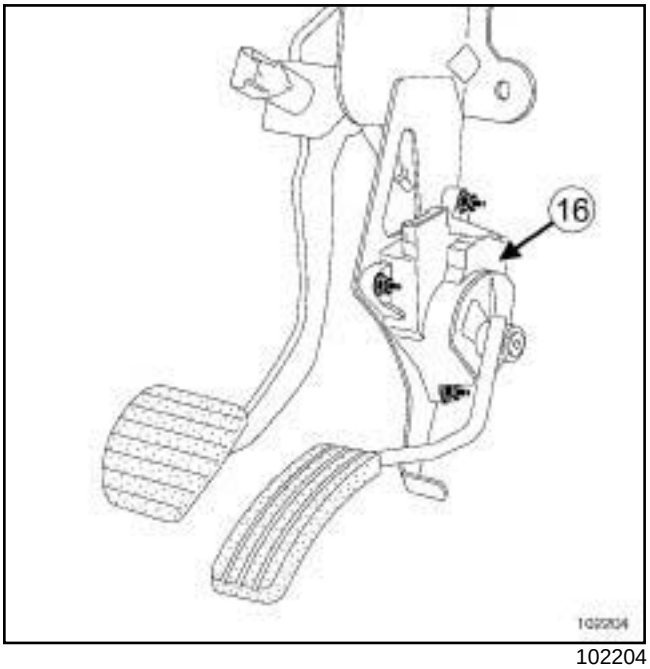

102204

(**16**) Accelerator pedal potentiometer

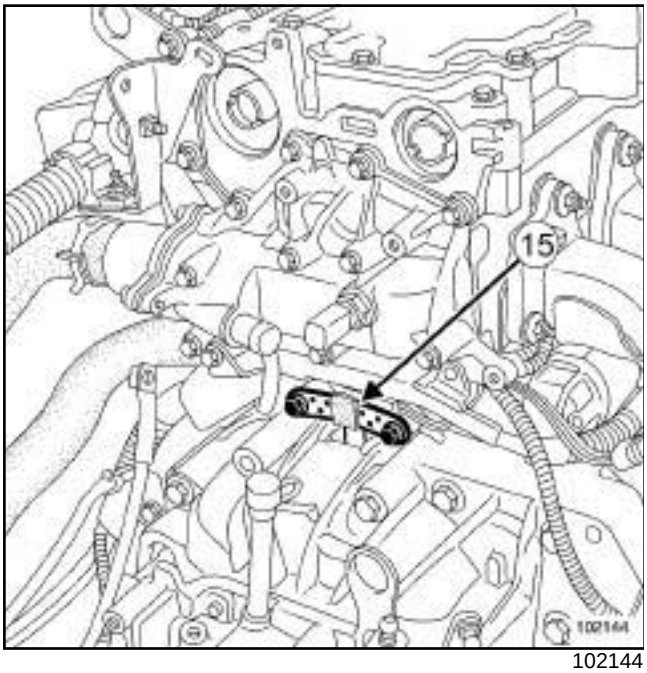

102144

(**15**) Engine speed and position sensor

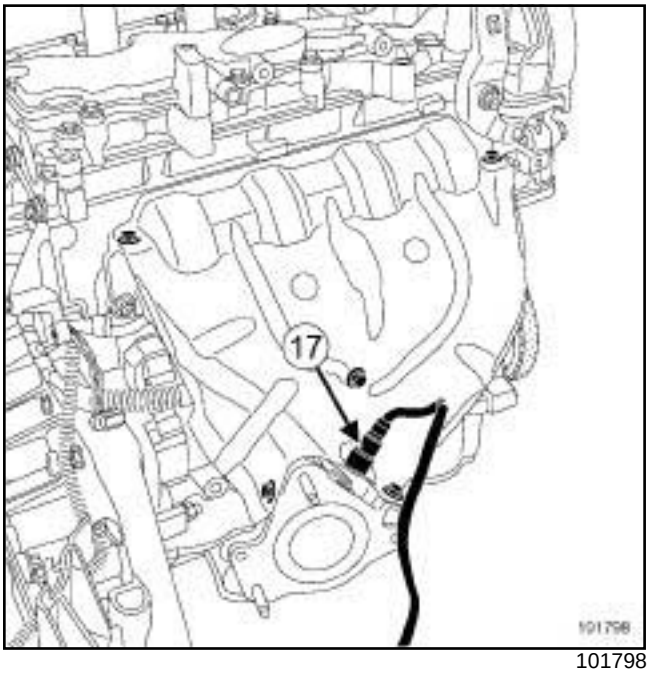

101798

(**17**) Upstream oxygen sensor

B84 or C84 or G84 or S84, and K4M, and 760 or 761 or 788 or 812 or 813

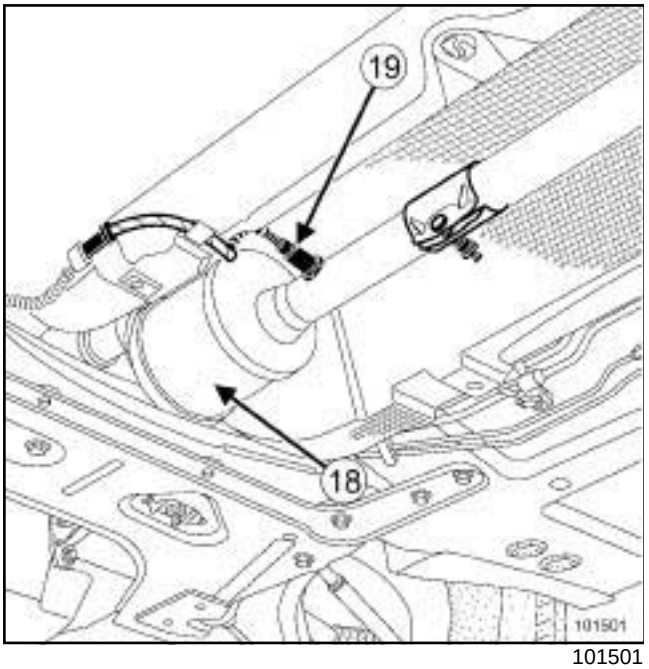

101501

(**18**)	Catalytic converter
(**19**)	Downstream oxygen sensor

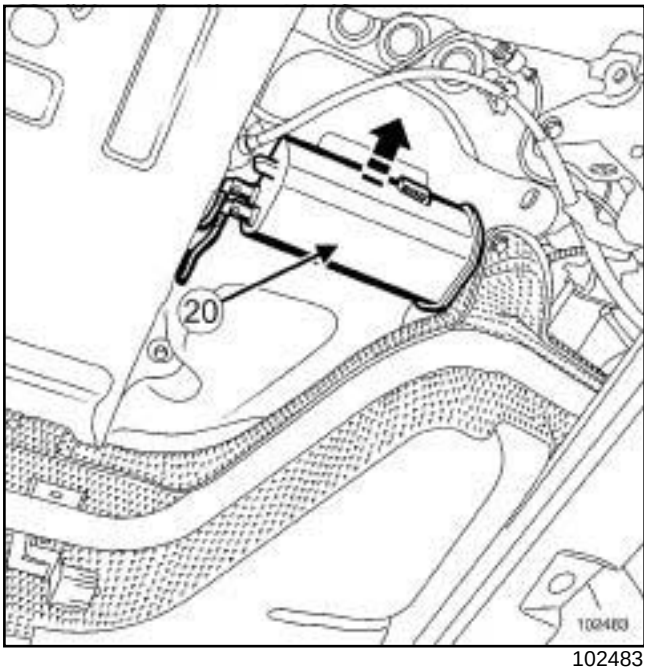

102483

(**20**)	Fuel vapour recirculation absorber

B84 or C84 or G84 or S84, and K4J, and 730 or 732 or 740 – B84 or C84 or G84, and K4M, and 764 or 768 or 856

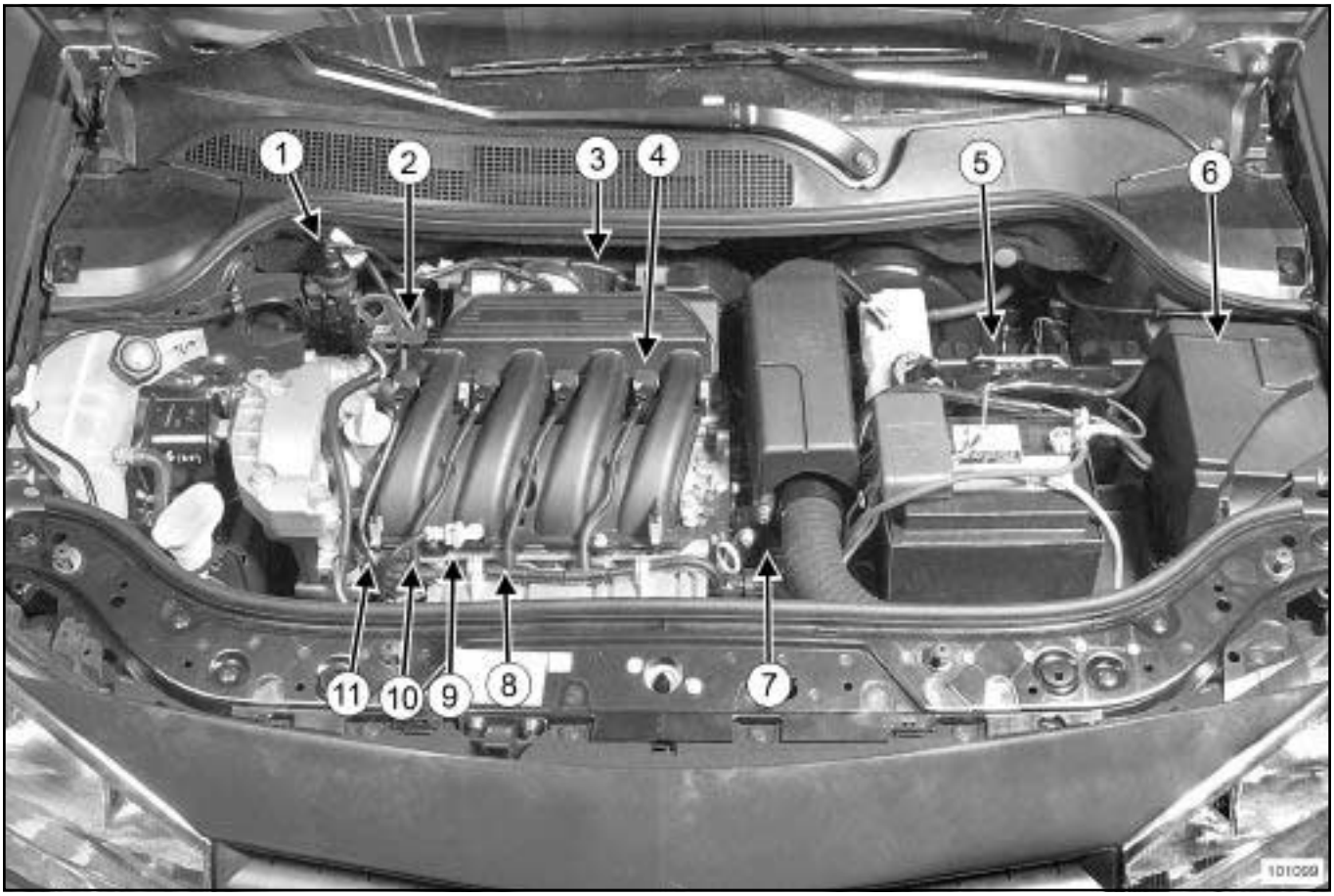

101099

(**1**)	Fuel vapour recirculation solenoid valve
(**2**)	Manifold pressure sensor
(**3**)	Motorised throttle valve
(**4**)	Ignition coil
(**5**)	Injection computer
(**6**)	Protection and Switching Unit
(**7**)	Temperature sensor
(**8**)	Pinking sensor
(**9**)	Air temperature sensor
(**10**)	Injectors
(**11**)	Injector rail

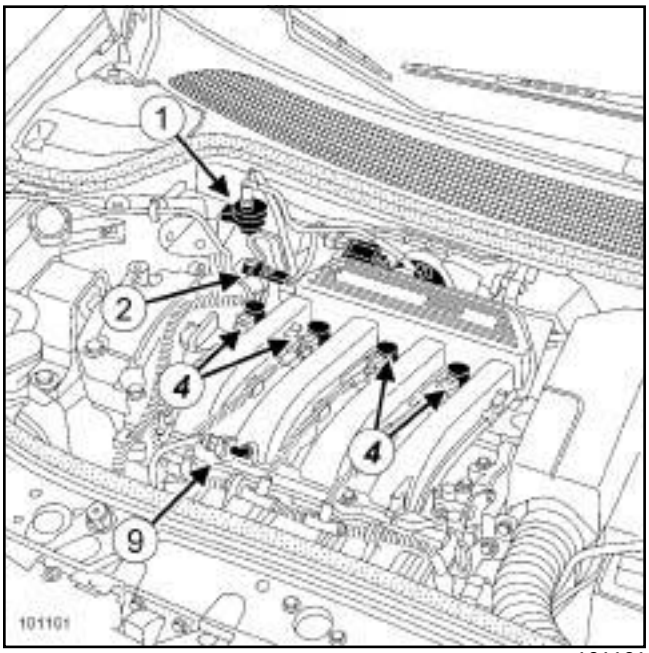

101101

(**1**)	Fuel vapour recirculation solenoid valve
(**2**)	Manifold pressure sensor

B84 or C84 or G84 or S84, and K4J, and 730 or 732 or 740 – B84 or C84 or G84, and K4M, and 764 or 768 or 856

(**4**) Ignition coils
(**9**) Air temperature sensor

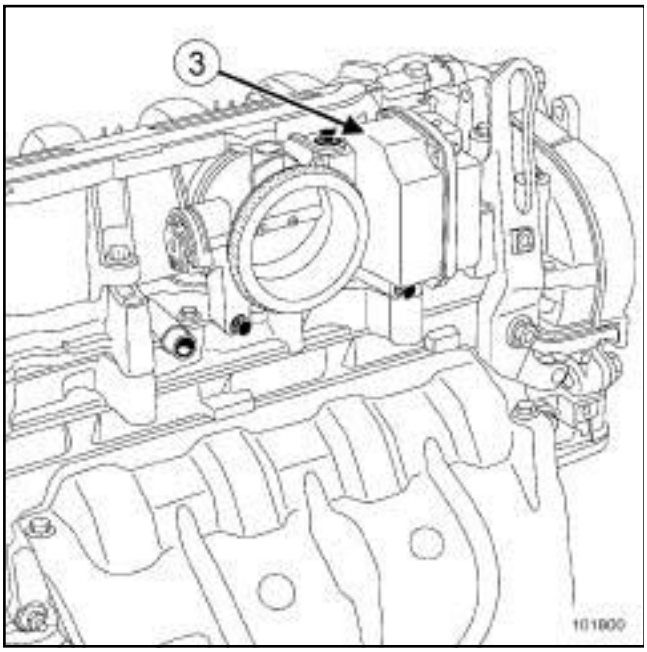

101800

(**3**) Motorised throttle valve

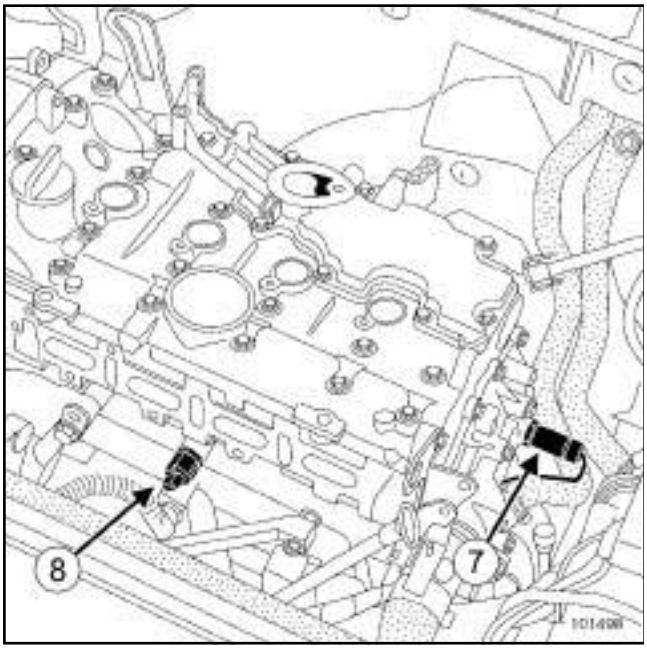

101498

(**7**) Coolant temperature sensor
(**8**) Pinking sensor

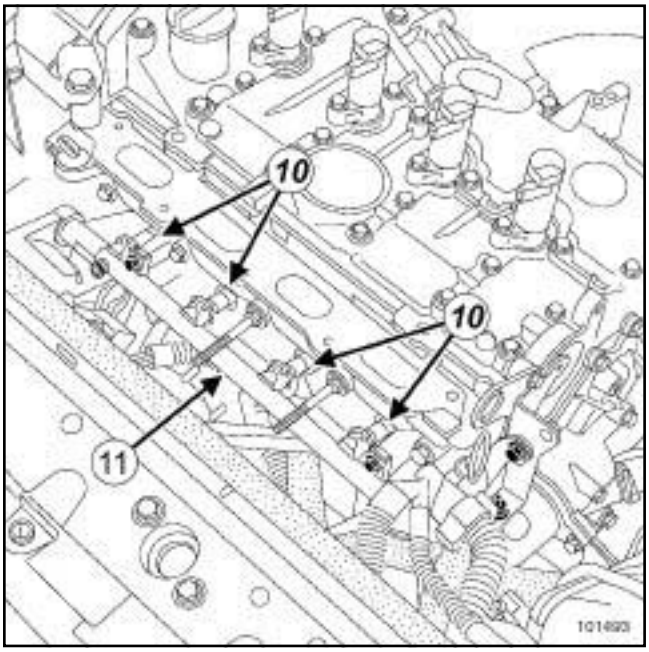

101493

(**10**) Injectors
(**11**) Injector rail

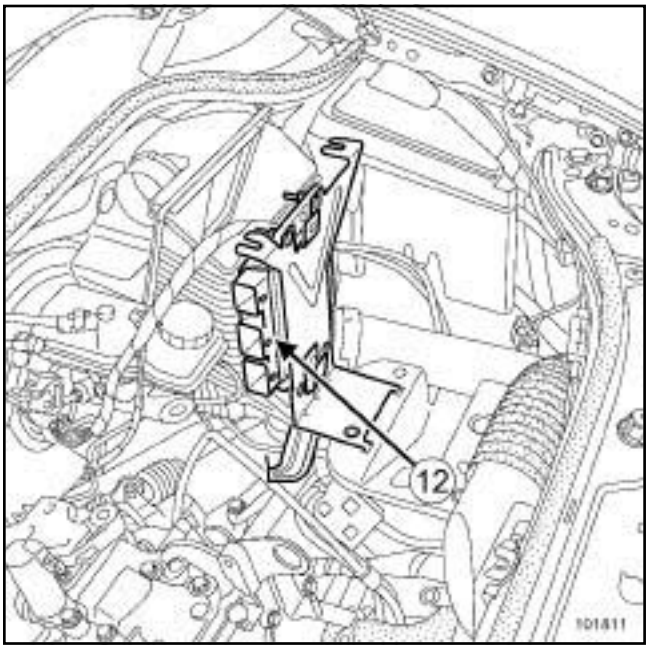

101811

(**12**) Injection computer

B84 or C84 or G84 or S84, and K4J, and 730 or 732 or 740 – B84 or C84 or G84, and K4M, and 764 or 768 or 856

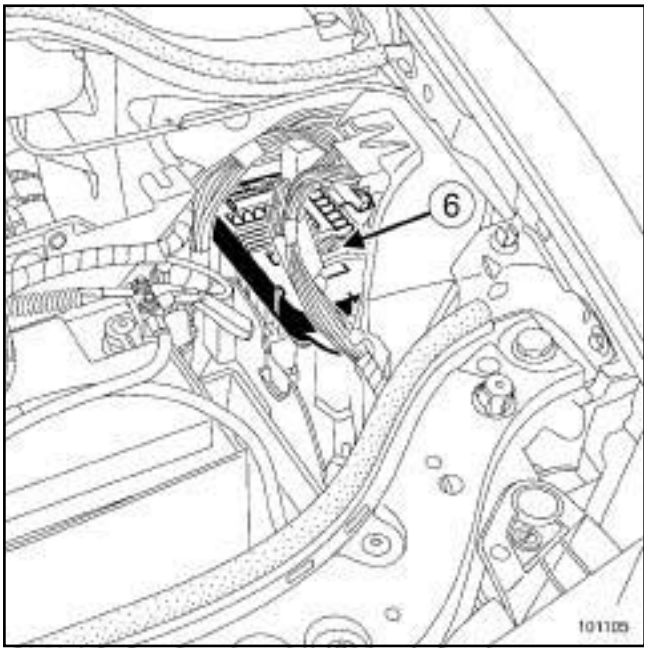

101105

(**6**) Protection and Switching Unit

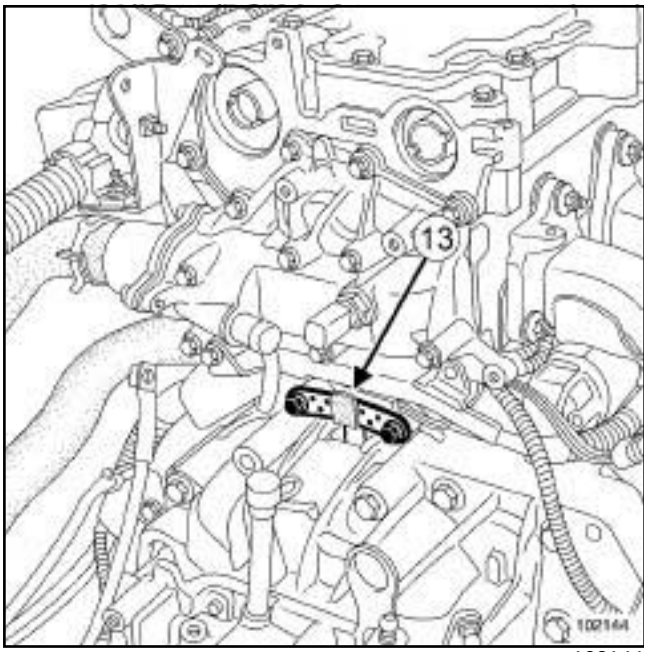

102144

(**13**) Engine speed and position sensor

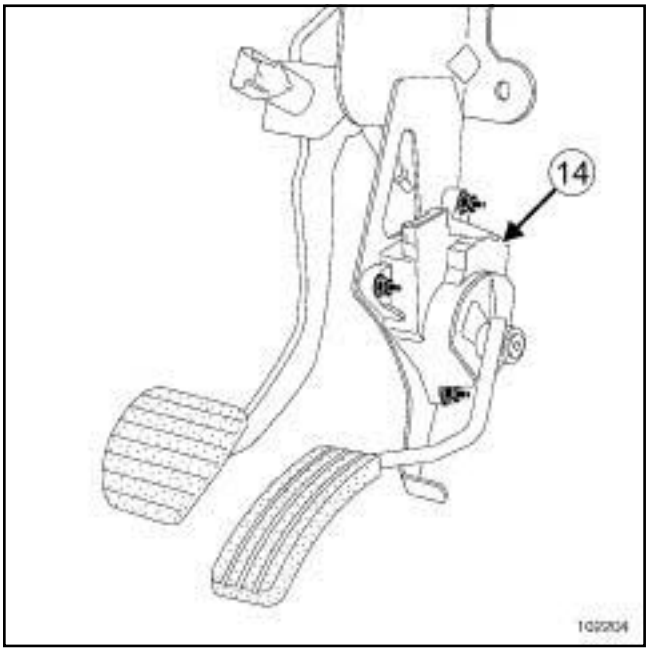

102204

(**14**) Accelerator pedal potentiometer

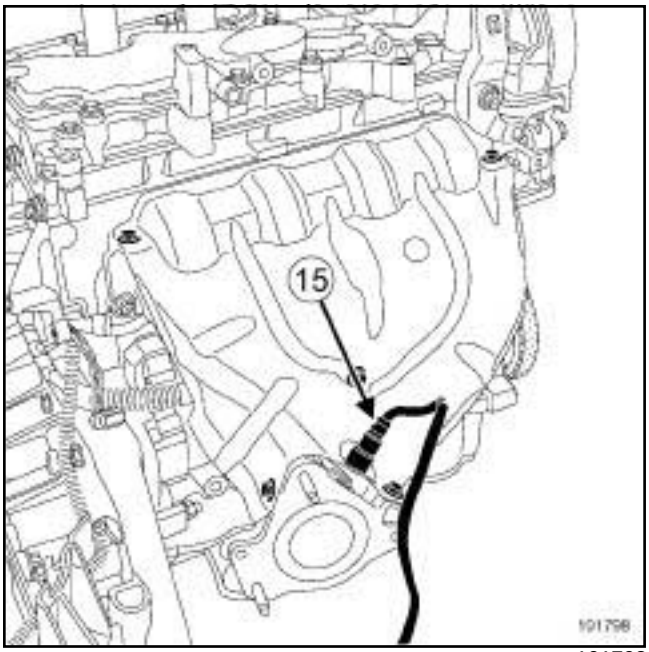

101798

(**15**) Upstream oxygen sensor

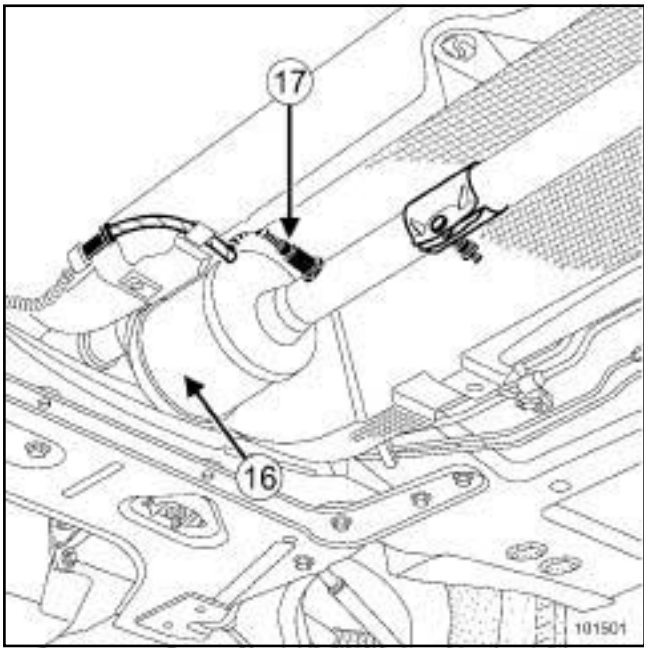

101501

(**16**) Catalytic converter

(**17**) Downstream oxygen sensor

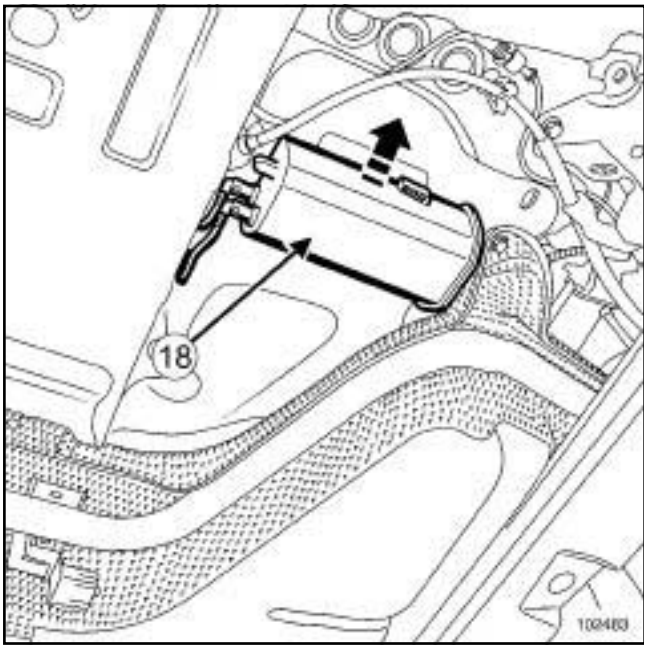

102483

(**18**) Fuel vapour recirculation absorber

B84 or C84 or G84 or S84, and F4R, and 770 or 771 or 776

F4R, and 770 or 771

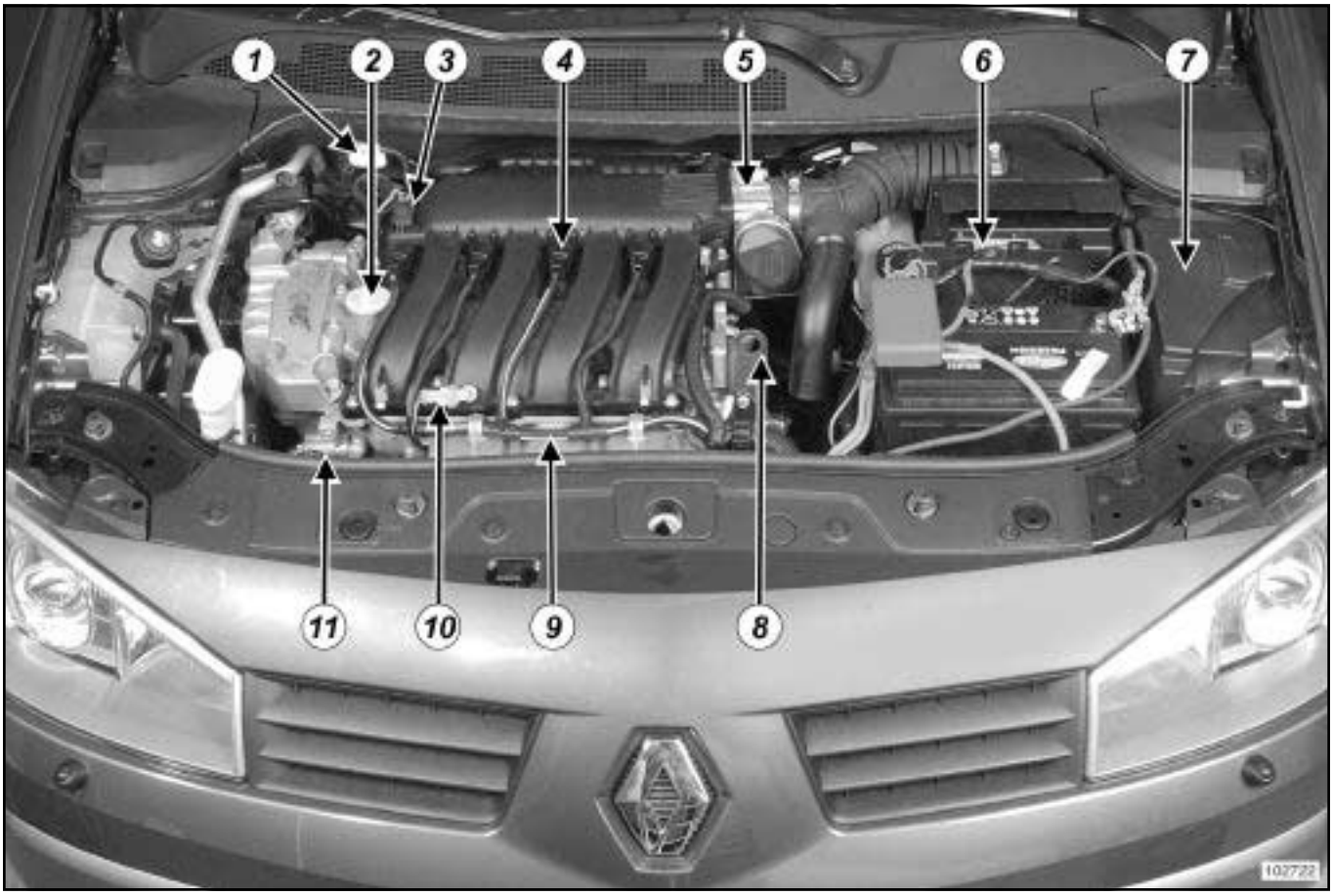

102722

(**1**)	Fuel vapour recirculation solenoid valve
(**2**)	Camshaft dephaser solenoid valve
(**3**)	Manifold pressure sensor
(**4**)	Ignition coil
(**5**)	Motorised throttle valve
(**6**)	Injection computer
(**7**)	Protection and Switching Unit
(**8**)	Coolant temperature sensor
(**9**)	Pinking sensor
(**10**)	Air temperature sensor
(**11**)	Injector rail and injectors

B84 or C84 or G84 or S84, and F4R, and 770 or 771 or 776

F4R, and 776

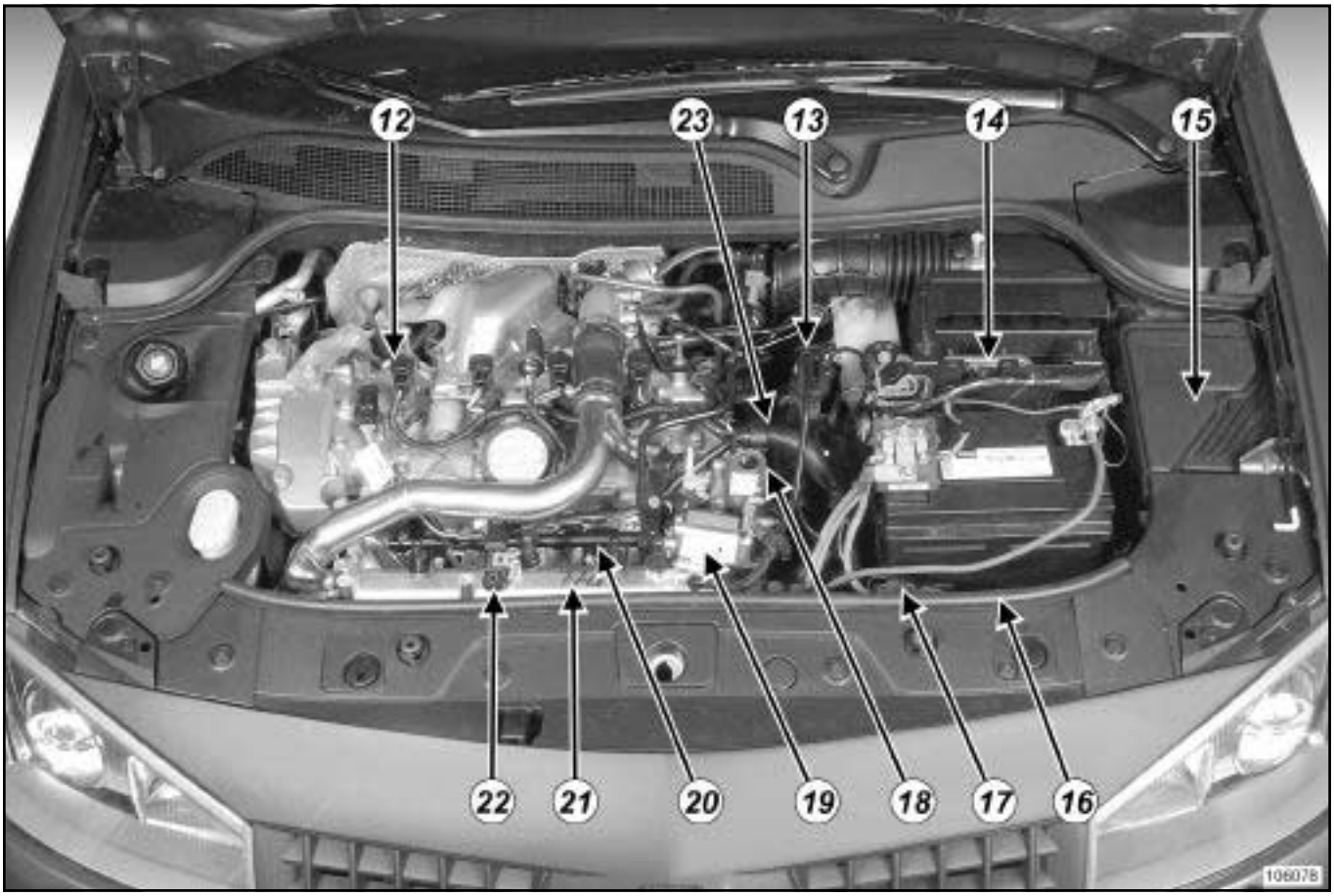

106078

(**12**)	Ignition coil
(**13**)	Fuel vapour recirculation solenoid valve
(**14**)	Injection computer
(**15**)	Protection and Switching Unit
(**16**)	Air temperature sensor
(**17**)	Turbocharging pressure sensor
(**18**)	Coolant temperature sensor
(**19**)	Motorised throttle valve
(**20**)	Injector rail and injectors
(**21**)	Pinking sensor
(**22**)	Manifold pressure sensor
(**23**)	Electric water pump

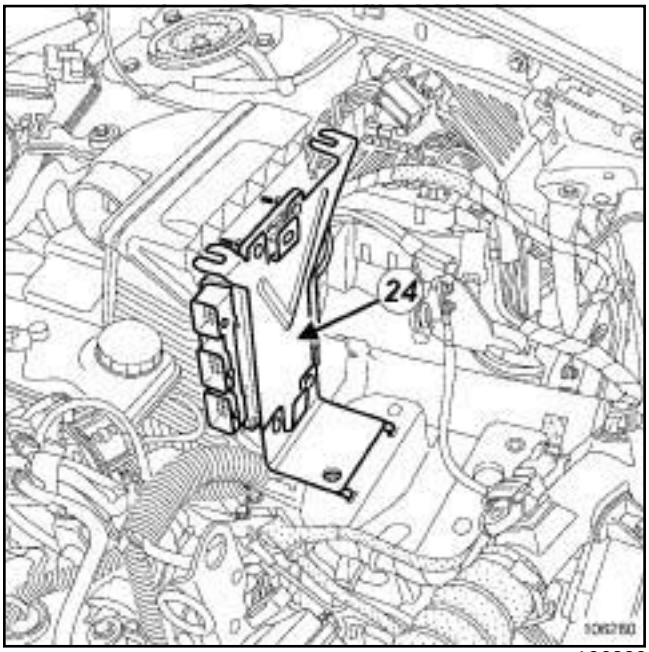

106280

(**24**) Injection computer

B84 or C84 or G84 or S84, and F4R, and 770 or 771 or 776

F4R, and 770 or 771

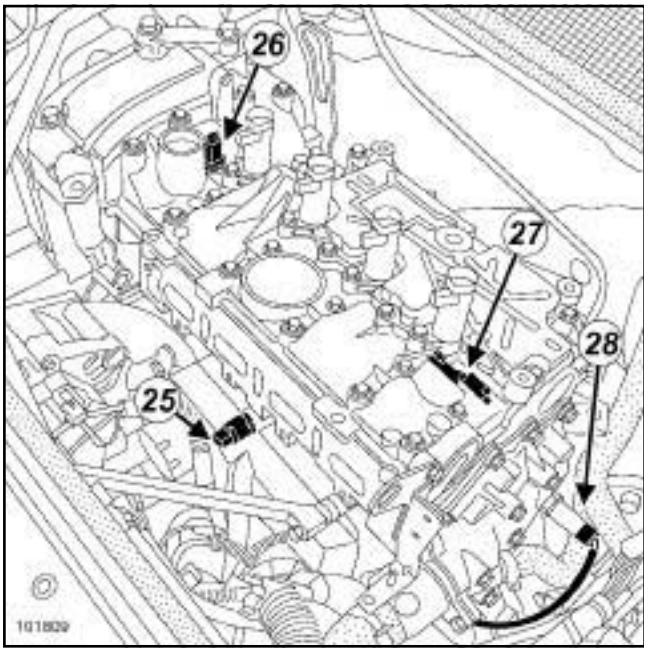

101809

(**25**)	Pinking sensor
(**26**)	Camshaft dephaser solenoid valve
(**27**)	Camshaft position sensor
(**28**)	Coolant temperature sensor

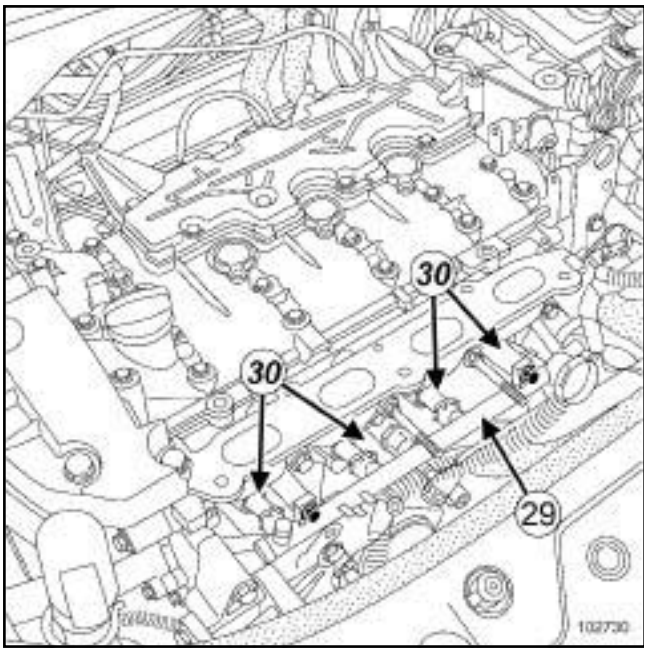

102730

(**29**)	Injector rail
(**30**)	Injectors

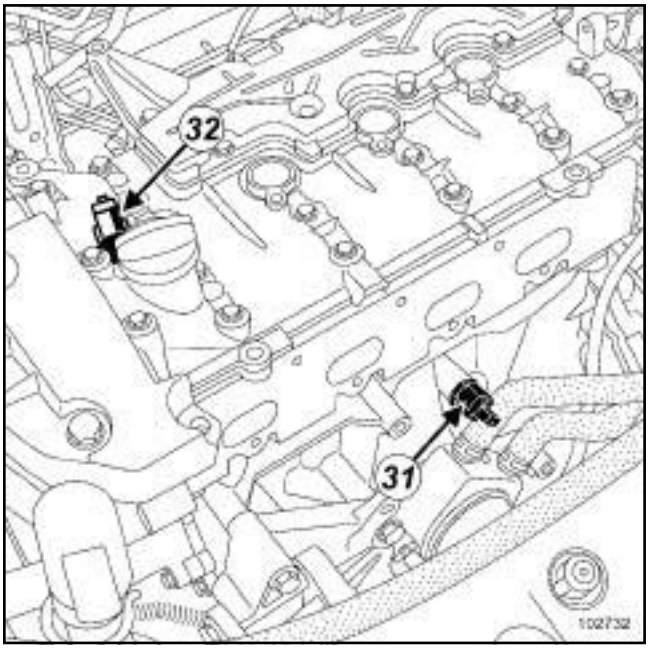

102732

(**31**)	Pinking sensor
(**32**)	Camshaft dephaser solenoid valve

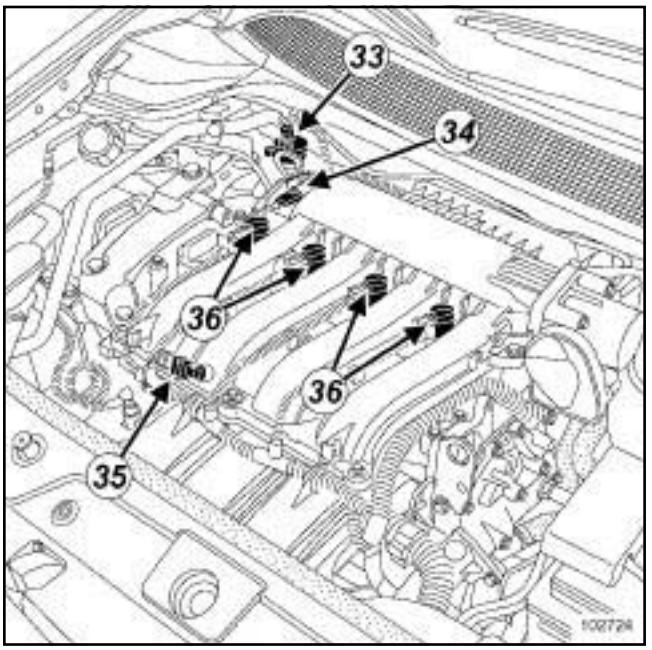

102724

(**33**)	Fuel recirculation solenoid valve
(**34**)	Manifold pressure sensor
(**35**)	Air temperature sensor
(**36**)	Ignition coil

B84 or C84 or G84 or S84, and F4R, and 770 or 771 or 776

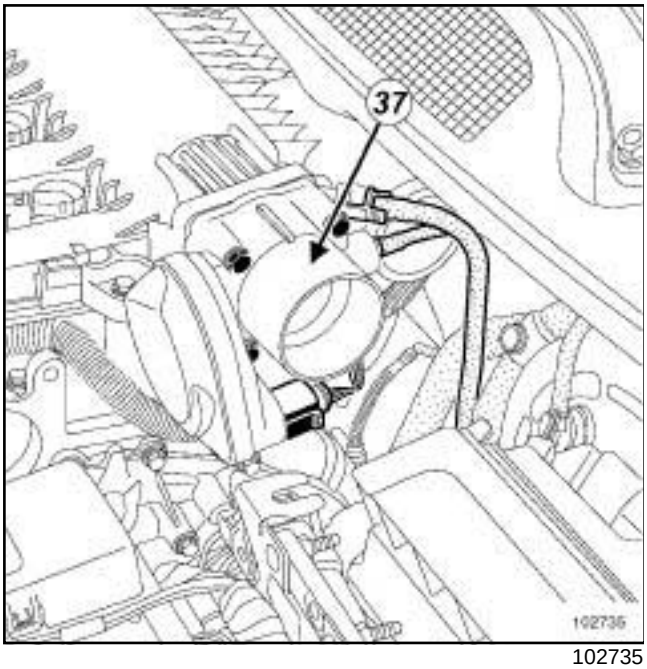

102735

(**37**) Throttle valve

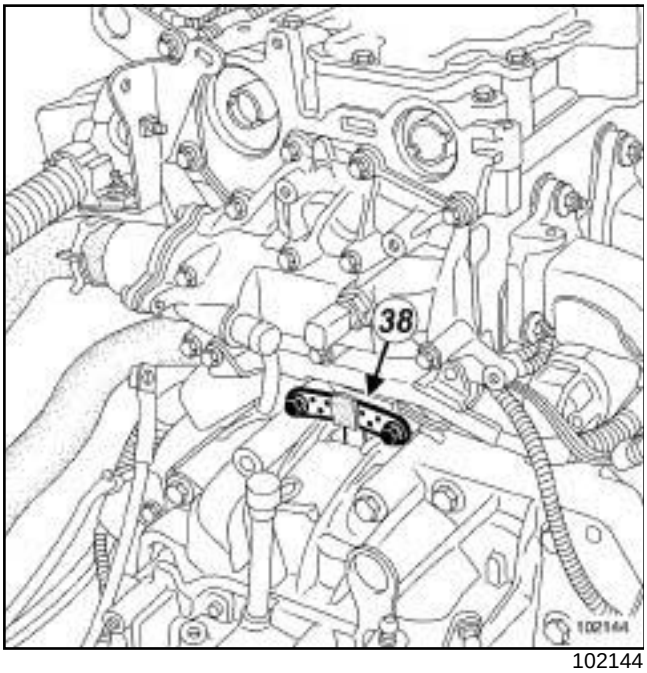

102144

(**38**) Engine speed and position sensor

F4R, and 776

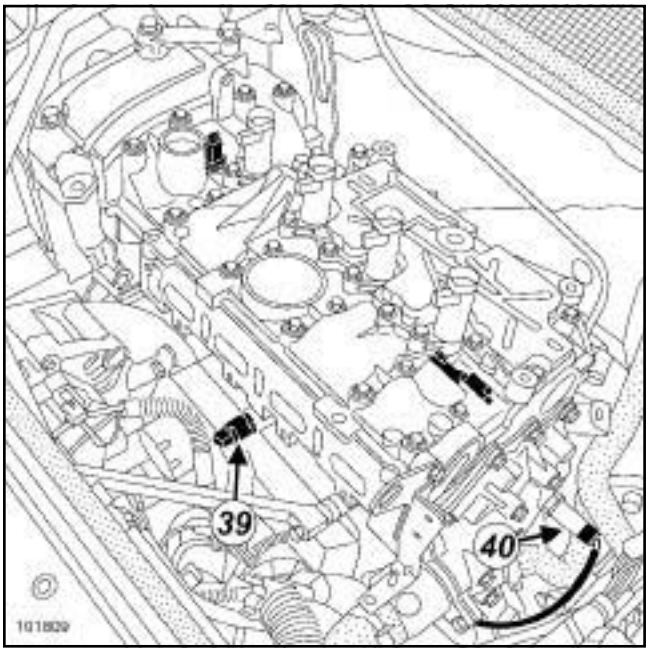

101809

(**39**) Pinking sensor

(**40**) Coolant temperature sensor

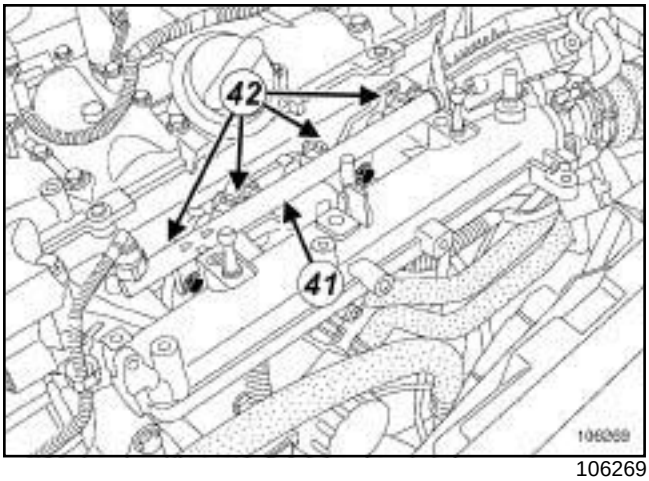

106269

(**41**) Injector rail

(**42**) Injectors

B84 or C84 or G84 or S84, and F4R, and 770 or 771 or 776

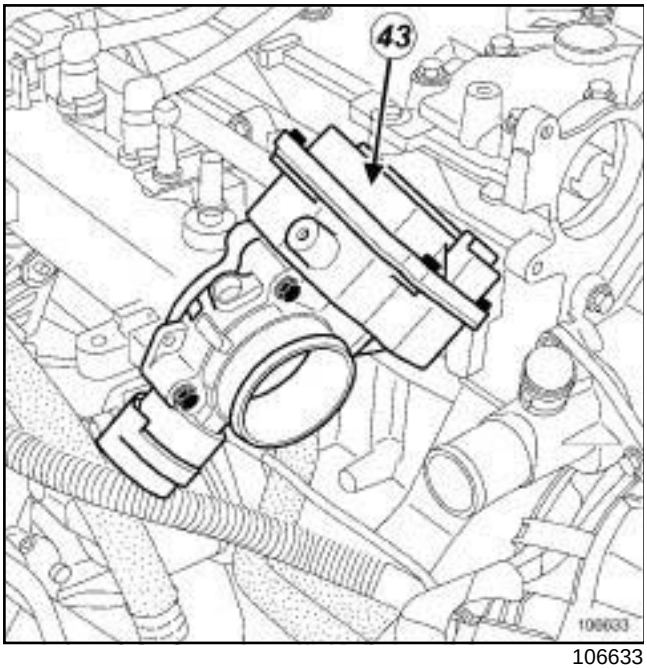

106633

(**43**) Motorised throttle valve

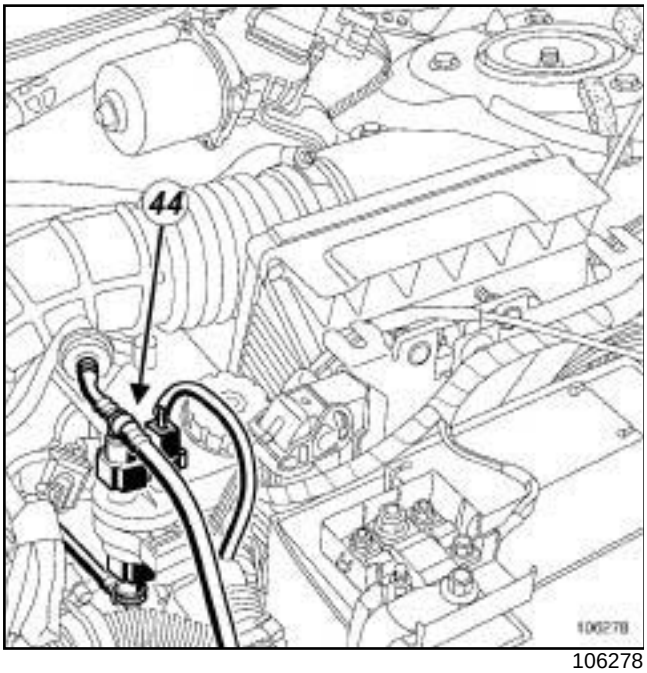

106278

(**44**) Fuel vapour recirculation solenoid valve

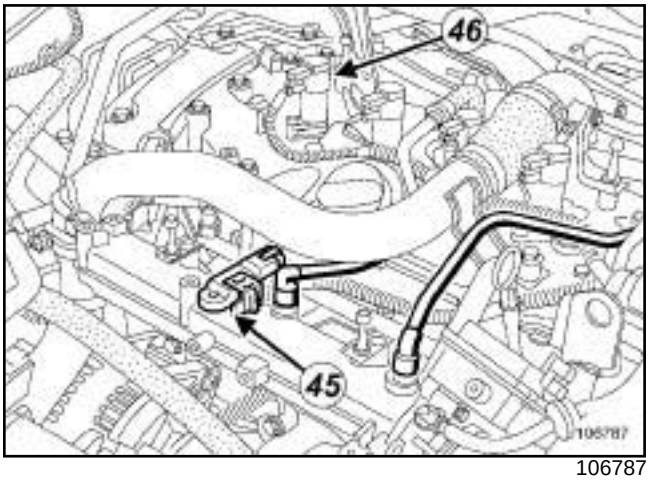

106787

(**45**) Manifold pressure sensor

(**46**) Ignition coils

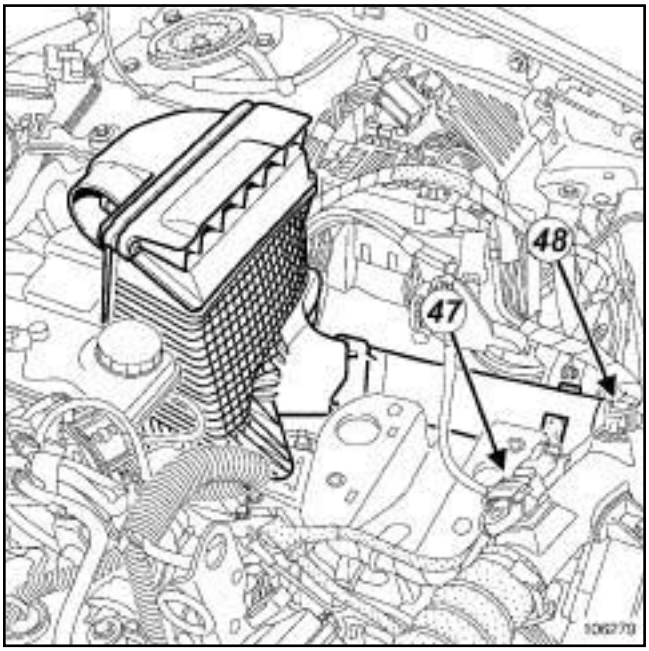

106279

(**47**) Turbocharging pressure sensor

(**48**) Air temperature sensor

B84 or C84 or G84 or S84, and F4R, and 770 or 771 or 776

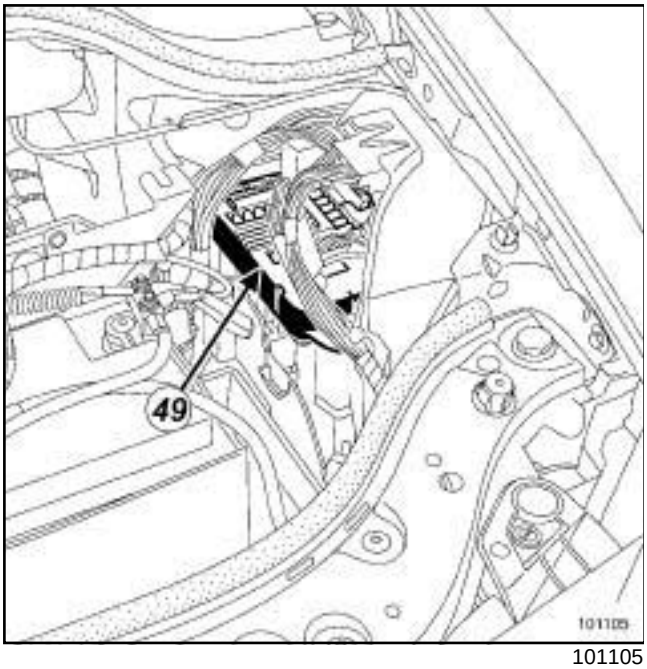

101105

(**49**) Protection and Switching Unit

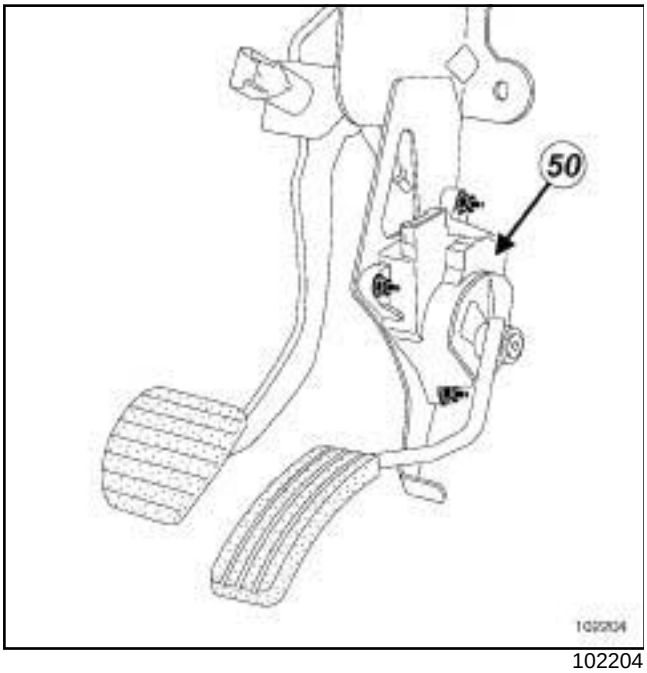

102204

(**50**) Accelerator pedal potentiometer

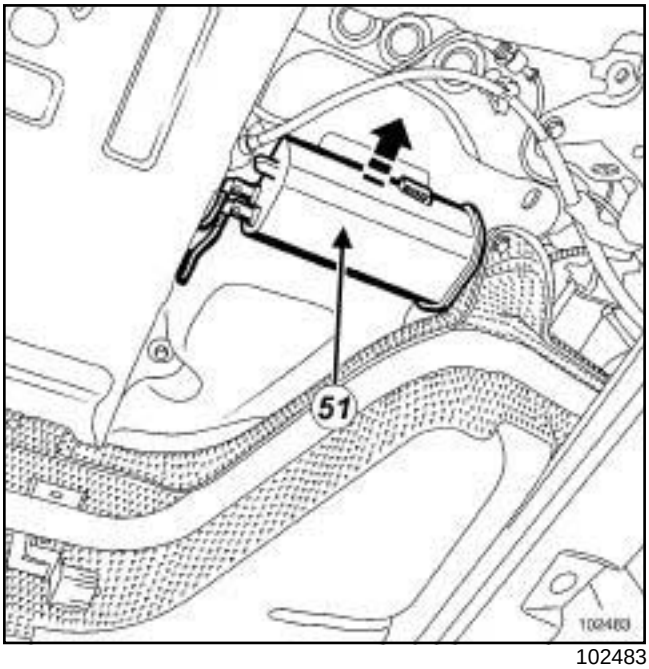

102483

(**51**) Fuel vapour recirculation absorber

F4R, and 770 or 771

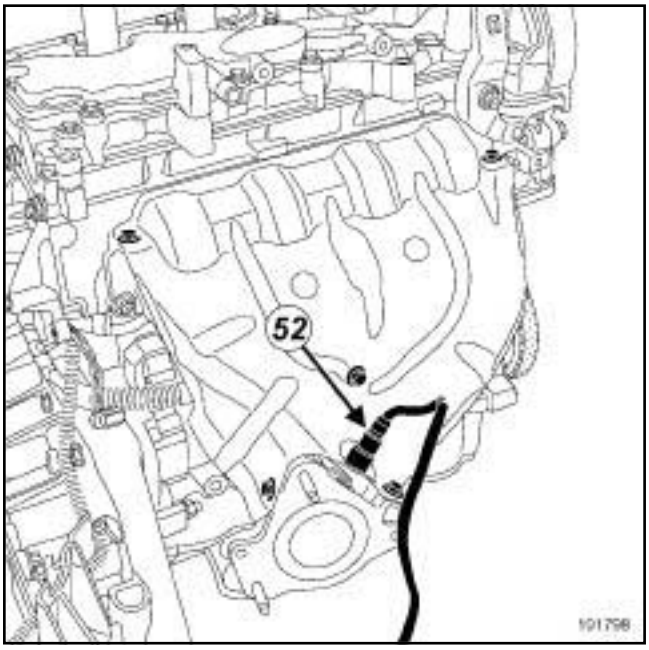

101798

(**52**) Upstream oxygen sensor

B84 or C84 or G84 or S84, and F4R, and 770 or 771 or 776

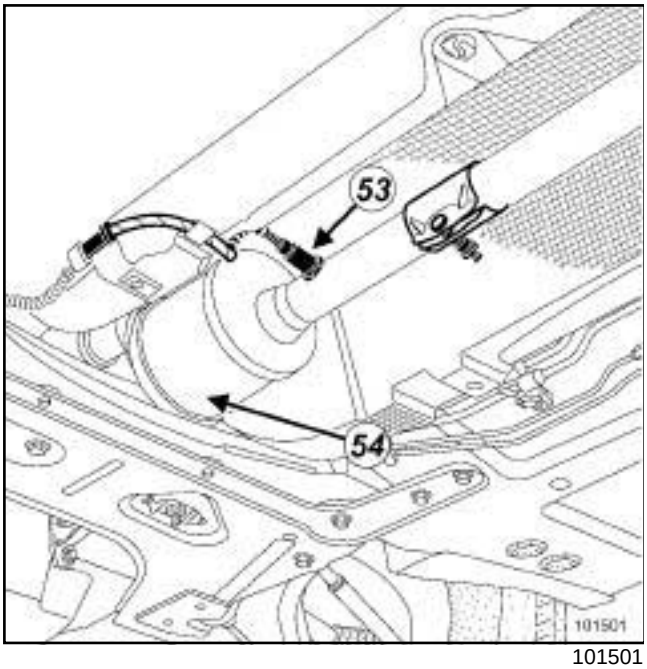

101501

(**53**) Downstream oxygen sensor
(**54**) Catalytic converter

F4R, and 776

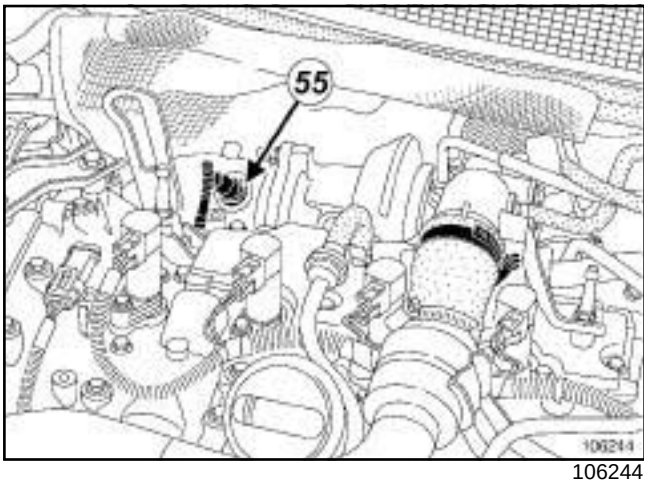

106244

(**55**) Upstream oxygen sensor

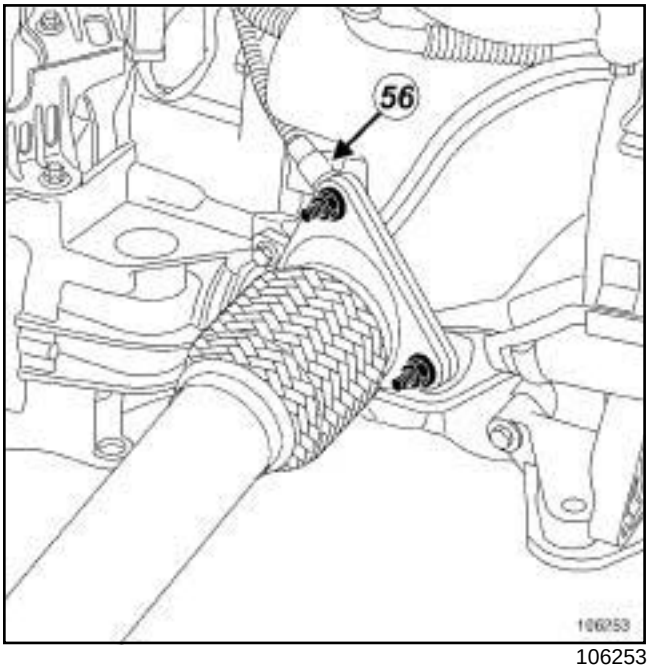

106253

(**56**) Downstream oxygen sensor

F4R, and 770 or 771 – K4M – K4J

Essential special tooling	
Mot. 1495-01	22 mm socket for removing/ refitting oxygen sensors.

Essential equipment
open-ended spanner for torque wrench

Tightening torques ▽	
upstream oxygen sensor	**45 N.m**
downstream oxygen sensor	**45 N.m**

WARNING

Do not use any product designed to improve the electrical contact in the injection computer and oxygen sensor connectors or on the bodies of the oxygen sensors.

Failure to respect this advice causes the oxygen sensor to malfunction and results in failure to comply with the emission control standard.

WARNING

If the connections are corroded, repair the wiring (see **Wiring: Precautions for repair**) (Technical Note 6015A, 88A, Wiring).

Note:

This procedure is for removal - refitting of the upstream oxygen sensor and the downstream oxygen sensor.

REMOVAL

I - REMOVING THE UPSTREAM OXYGEN SENSOR

❑ Disconnect the upstream oxygen sensor connector.

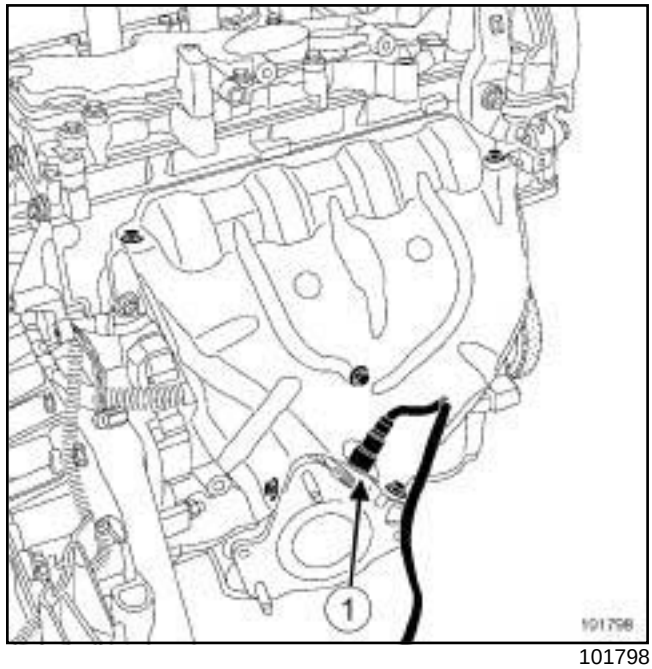

101798

❑ Remove the upstream oxygen sensor (**1**) using the **(Mot. 1495-01)**.

II - REMOVING THE DOWNSTREAM OXYGEN SENSOR

❑ Disconnect the downstream oxygen sensor connector.

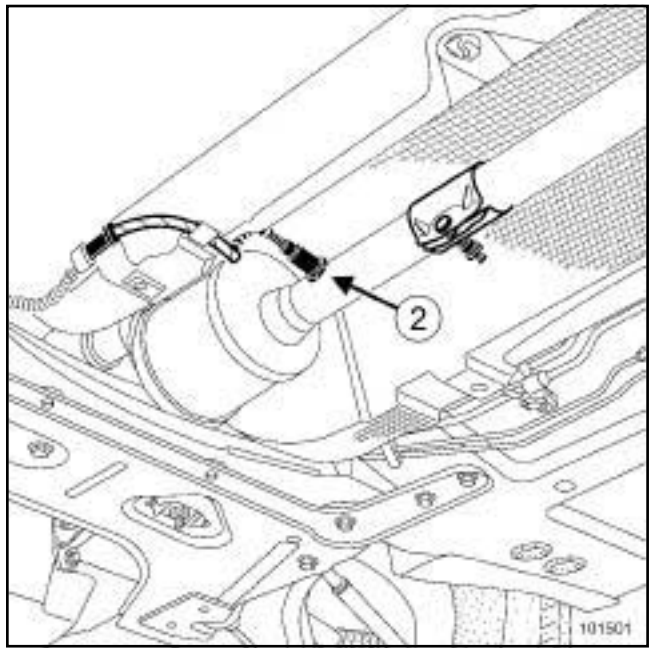

101501

❑ Remove the downstream oxygen sensor (**2**) .

F4R, and 770 or 771 – K4M – K4J

REFITTING

I - REFITTING THE UPSTREAM OXYGEN SENSOR

- ❏ Refit the upstream oxygen sensor.
- ❏ Torque tighten the **upstream oxygen sensor (45 N.m)** using the **(Mot. 1495-01)**.
- ❏ Connect the upstream oxygen sensor connector.

II - REFITTING THE DOWNSTREAM OXYGEN SENSOR

- ❏ Refit the downstream oxygen sensor.
- ❏ Torque tighten the **downstream oxygen sensor (45 N.m)** using a **24 mm open-ended spanner for torque wrench**.
- ❏ Connect the downstream oxygen sensor connector.

F4R, and 776

Essential special tooling	
Mot. 1495-01	22 mm socket for removing/ refitting oxygen sensors.

Essential equipment
open-ended spanner for torque wrench

Tightening torques ▽	
upstream oxygen sensor	**34 N.m**
downstream oxygen sensor	**34 N.m**

WARNING

Do not use any product designed to improve the electrical contact in the injection computer and oxygen sensor connectors or on the bodies of the oxygen sensors.

Failure to respect this advice causes the oxygen sensor to malfunction and results in failure to comply with the emission control standard.

WARNING

If the connections are corroded, repair the wiring (see **Wiring: Precautions for repair**) (Technical Note 6015A, 88A, Wiring).

Note:

This procedure is for removal - refitting of the upstream oxygen sensor and the downstream oxygen sensor.

REMOVAL

I - REMOVING THE UPSTREAM OXYGEN SENSOR

❑ Remove the front engine cover.

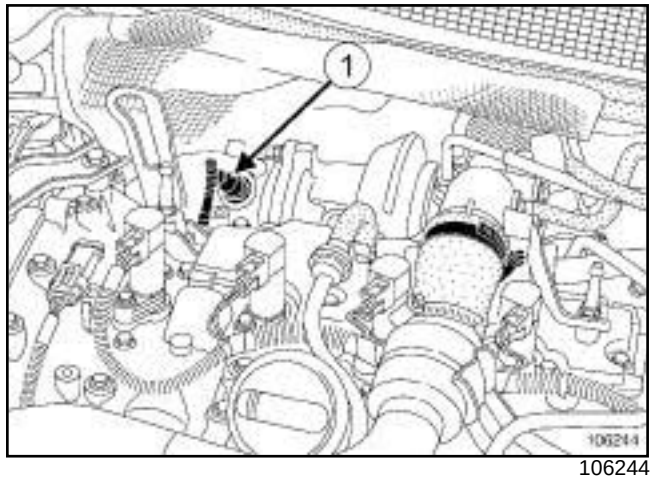

106244

❑ Disconnect the upstream oxygen sensor connector.

❑ Remove the upstream oxygen sensor (**1**) using the **(Mot. 1495-01)**.

II - REMOVING THE DOWNSTREAM OXYGEN SENSOR

❑ Remove the engine undertray.

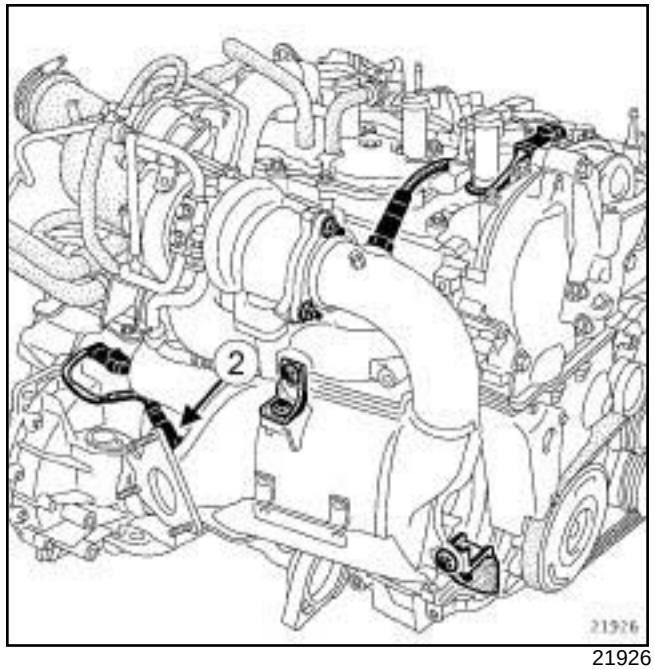

21926

❑ Disconnect the downstream oxygen sensor connector.

❑ Remove the downstream oxygen sensor (**2**) using the **(Mot. 1495-01)**.

F4R, and 776

REFITTING

I - REFITTING THE UPSTREAM OXYGEN SENSOR

- ❏ Refit the upstream oxygen sensor.
- ❏ Torque tighten the **upstream oxygen sensor (34 N.m)** using the **(Mot. 1495-01)**.
- ❏ Connect the upstream oxygen sensor connector.
- ❏ Refit the engine cover.

II - REFITTING THE DOWNSTREAM OXYGEN SENSOR

- ❏ Refit the downstream oxygen sensor.
- ❏ Torque tighten the **downstream oxygen sensor (34 N.m)** using a **24 mm open-ended spanner for torque wrench**.
- ❏ Connect the downstream oxygen sensor connector.
- ❏ Refit the engine undertray.

F4R, and 774

Essential special tooling	
Mot. 1495-01	22 mm socket for removing/ refitting oxygen sensors.

Essential equipment
open-ended spanner for torque wrench

Tightening torques ▽	
upstream oxygen sensor	**45 N.m**
downstream oxygen sensor	**45 N.m**

WARNING

Do not use any product designed to improve the electrical contact in the injection computer and oxygen sensor connectors or on the bodies of the oxygen sensors.

Failure to respect this advice causes the oxygen sensor to malfunction and results in failure to comply with the emission control standard.

WARNING

If the connections are corroded, repair the wiring (see **Wiring: Precautions for repair**)(Technical Note 6015A, 88A, Wiring).

REMOVAL

I - REMOVING THE UPSTREAM OXYGEN SENSOR

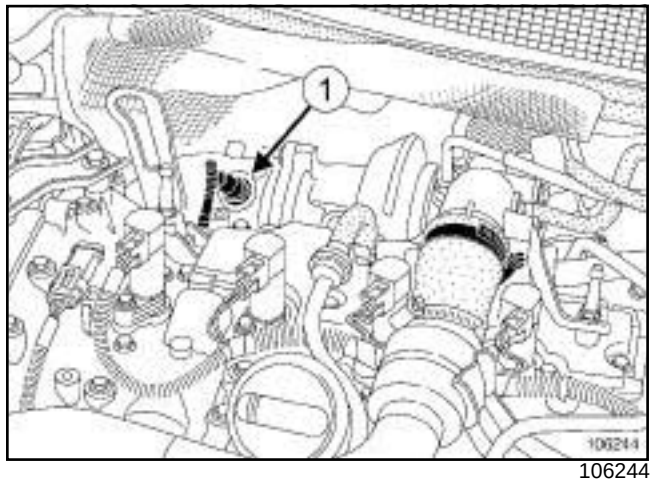

106244

❑ Disconnect the upstream oxygen sensor connector.

❑ Remove the upstream oxygen sensor (**1**) using the **(Mot. 1495-01)**.

II - REMOVING THE DOWNSTREAM OXYGEN SENSOR

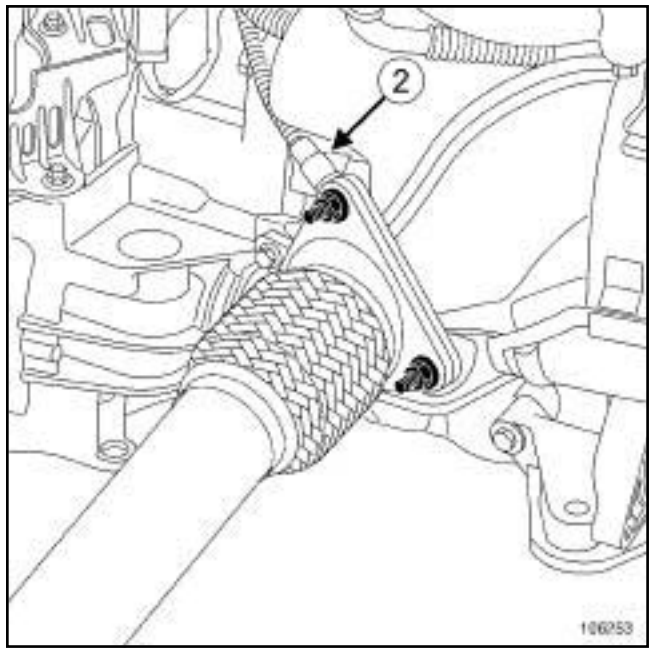

106253

❑ Disconnect the downstream oxygen sensor connector.

❑ Remove the downstream oxygen sensor (**2**) using the **(Mot. 1495-01)**.

F4R, and 774

REFITTING

I - REFITTING THE UPSTREAM OXYGEN SENSOR

- ❏ Refit the upstream oxygen sensor.
- ❏ Torque tighten the **upstream oxygen sensor (45 N.m)** using the **(Mot. 1495-01)**.
- ❏ Connect the upstream oxygen sensor connector.

II - REFITTING THE DOWNSTREAM OXYGEN SENSOR

- ❏ Refit the downstream oxygen sensor.
- ❏ Torque tighten the **downstream oxygen sensor (45 N.m)** using a **24 mm open-ended spanner for torque wrench**.
- ❏ Connect the downstream oxygen sensor connector.

Accelerator pedal potentiometer: Removal - Refitting

B84 or C84 or G84 or S84, and F4R or K4J or K4M

Tightening torques ▽	
battery cover mounting bolts	**4 Nm**

The accelerator pedal potentiometer is incorporated in the accelerator pedal. If it is replaced, the accelerator pedal must also be replaced.

There are two types of pedal: **with or without kickdown point**.

Vehicles equipped with cruise control/speed limiter have an accelerator pedal with a point of resistance at the end of their travel (kickdown)

This kickdown point is used for exiting the speed limiter function if the driver has to increase his speed.

Note:

A pedal fitted with a kickdown point may be fitted in place of a pedal without a kickdown point. Fitting a pedal without a kickdown point in place of a pedal with a kickdown point is not permitted.

REMOVAL

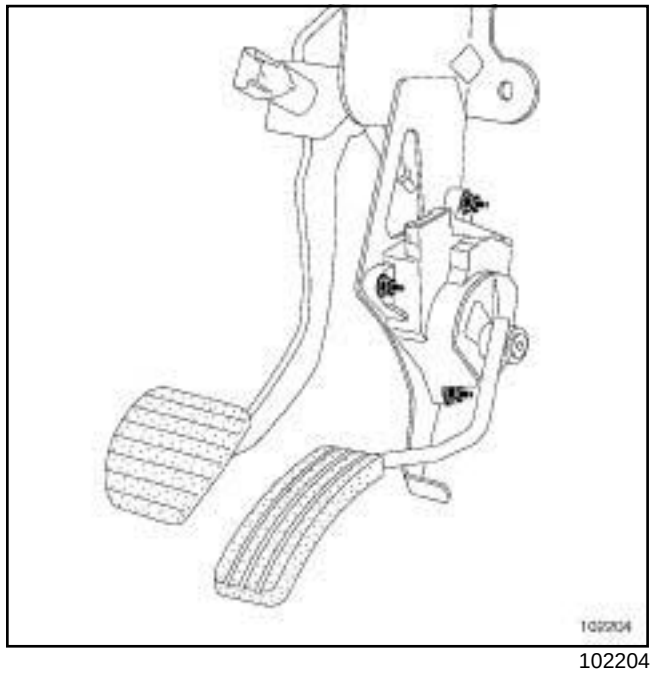

102204

❑ Disconnect:

- the battery (see **Battery : Removal - Refitting**) (MR 364, 80A, Battery),
- the accelerator pedal connector.

❑ Remove:

- the pedal mounting bolts,
- the pedal.

REFITTING

❑ Proceed in the reverse order to removal.

❑ Connect the battery (see **Battery : Removal - Refitting**) (MR 364, 80A, Battery).

Note:

A fault on the accelerator pedal position potentiometer modifies the idle speed or operation (see **Fault finding - Interpretation of fault**) (MR366, 17B, Petrol injection).

❑ Torque tighten the **battery cover mounting bolts (4 Nm)**.

B84 or C84 or G84 or S84, and F4R, and 770 or 776 – B84 or C84 or G84 or S84, and K4M, and 760 – B84 or C84 or G84 or S84, and K4J, and 730 or 732

Essential equipment
diagnostic tool

F4R, and 770 – K4M, and 760 – K4J, and 730 or 732

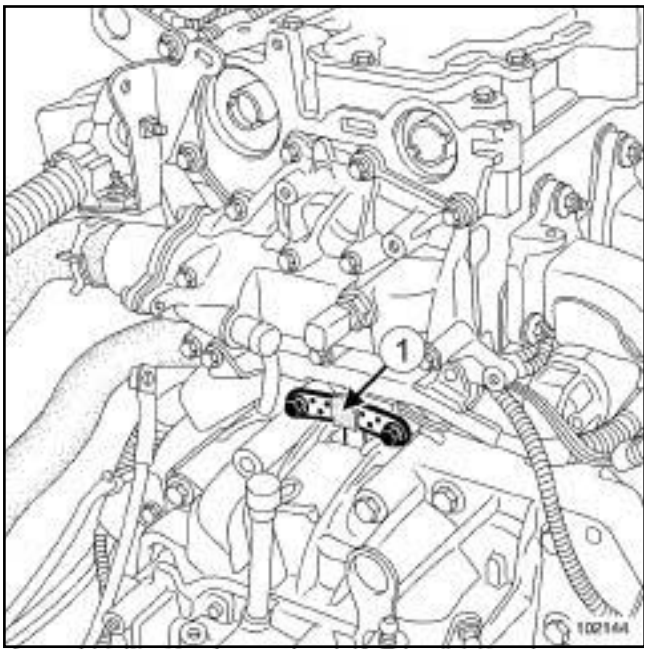

102144

❑ Program the flywheel target after replacing the speed and position sensor (**1**) or the flywheel.

F4R, and 776

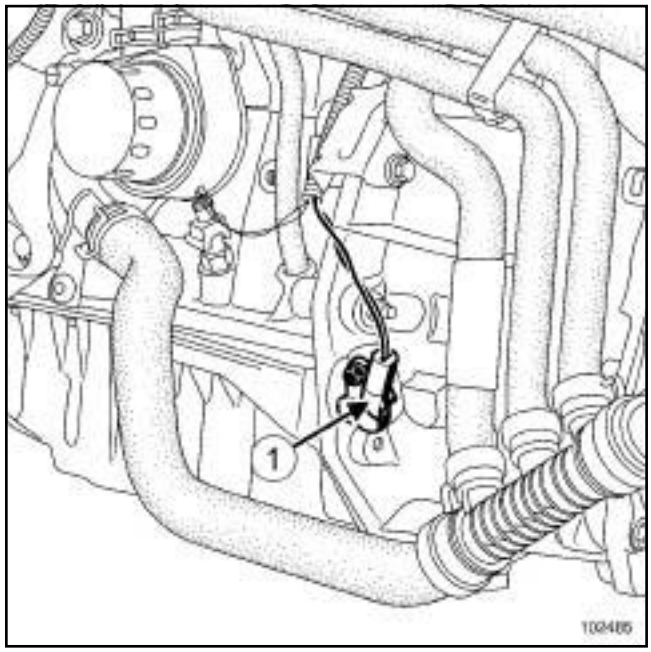

102485

❑ Program the flywheel target after replacing the speed and position sensor ***(1)*** or the flywheel.

❑ In third gear, decelerate twice in succession from **4, 000 rpm** to power take-up speed.

Power take-up speed is the moment when, during deceleration under no load with the injection cut out, the computer authorises injection again.

❑ Use the **diagnostic tool** to check that the programming has been carried out correctly **ET089: « Program engine flywheel target »** .

❑ Read the fault codes.

❑ Repair if necessary.

❑ Clear the fault codes.

❑ Check that the vehicle is working correctly.

B84 or C84 or G84 or S84, and F4R, and 771 – B84 or C84 or G84 or S84, and K4M, and 761

Essential equipment
diagnostic tool

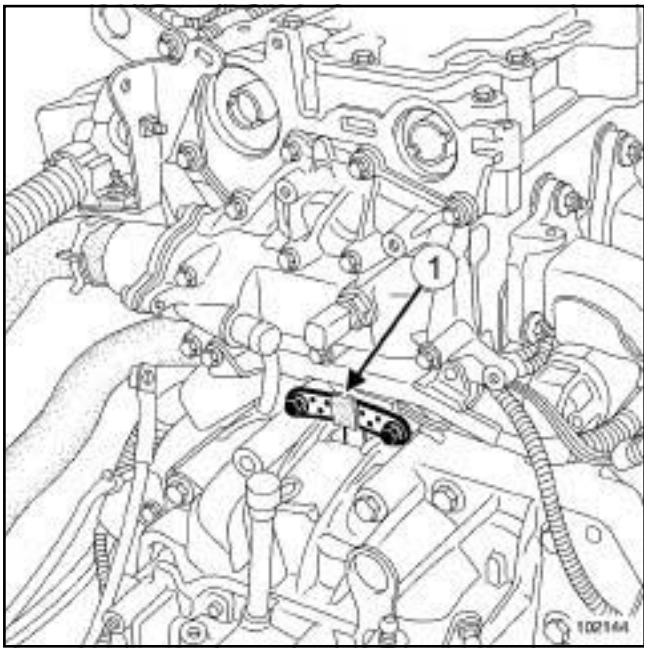

102144

- Program the flywheel target after replacing the speed and position sensor (**1**) or the flywheel.
- In third gear, decelerate twice in succession from **4, 000 rpm** to power take-up speed.

  Power take-up speed is the moment when, during deceleration under no load with the injection cut out, the computer authorises injection again.

> Note:
>
> Do not place the gear lever in « D »

- Use the **diagnostic tool** to check that the programming has been carried out correctly **ET089: « Program engine flywheel target »** .
- Read the fault codes.
- Repair if necessary.
- Clear the fault codes.
- Check that the vehicle is working correctly.

B84 or C84, and F4R, and 774

Essential equipment
diagnostic tool

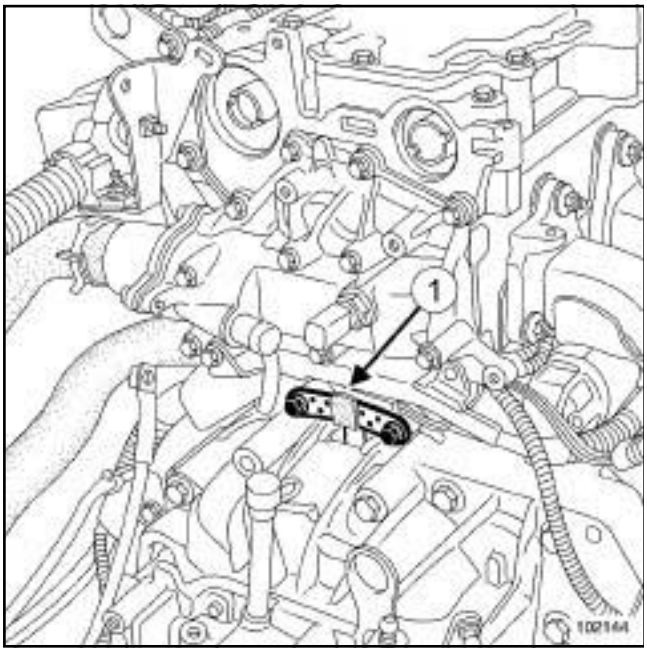

102144

- Program the engine flywheel target, after replacing the speed and position sensor (**1**) or the engine flywheel.
- In third gear, accelerate twice in succession to **4000 rpm**, then decelerate to power take-up speed.

  Power take-up speed is the moment when, during deceleration under no load with the injection cut out, the computer authorises injection again.
- Use the **diagnostic tool** to check that the programming has been carried out correctly **ET089: « Program engine flywheel target »** .
- Read the fault codes.
- Repair if necessary.
- Clear the fault codes.
- Check that the vehicle is working correctly.

K4J – K4M – F4R, and 770 or 771 or 776

Essential equipment
diagnostic tool

WARNING

Do not use any product designed to improve the electrical contact in the injection computer and oxygen sensor connectors or on the bodies of the oxygen sensors.

Failure to respect this advice causes the oxygen sensor to malfunction and results in failure to comply with the emission control standard.

WARNING

If the connections are corroded, repair the wiring (see **Wiring: Precautions for repair**) (Technical Note 6015A, 88A, Wiring).

REMOVAL

I - REMOVAL PREPARATION OPERATION

❑ Remove the engine covers.

K4J or K4M

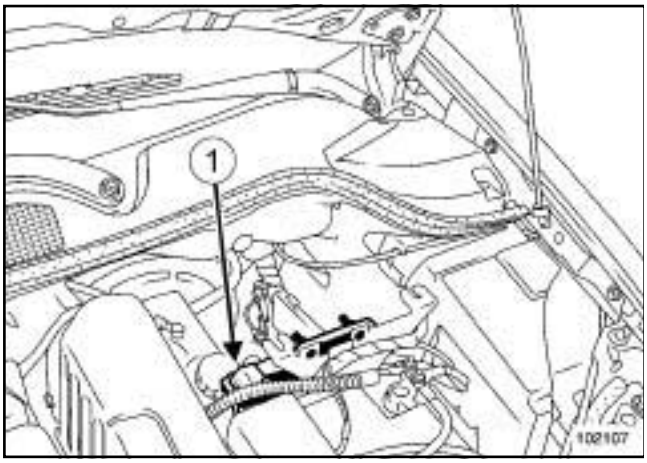

102107

❑ Disconnect:

- the battery (see **Battery: Removal - Refitting**) (80A, Battery),
- the connectors (**1**) from the petrol injection computer.

F4R, and 770 or 771 or 776

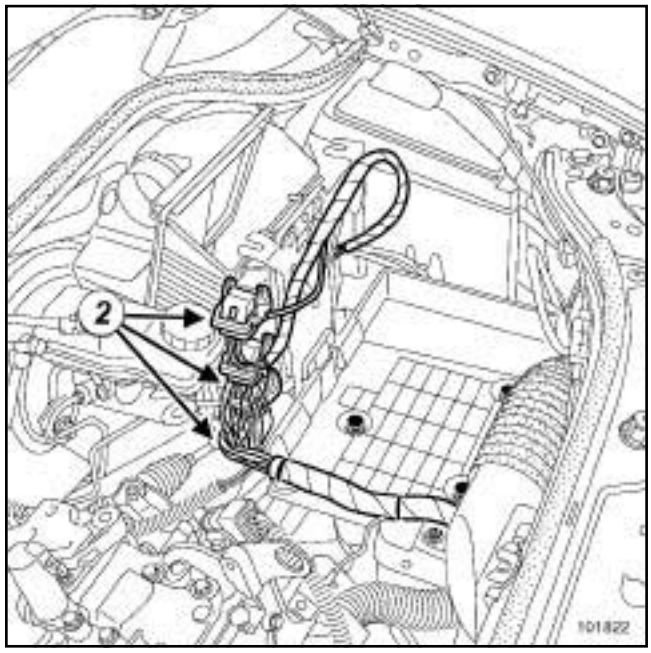

101822

❑ Remove:

- the battery (see **Battery: Removal - Refitting**) (80A, Battery),
- the battery tray (see **Battery tray: Removal - Refitting**) (80A, Battery).

❑ Disconnect the connectors from the petrol injection computer (**2**) .

II - REMOVAL OPERATION FOR THE PETROL INJECTION COMPUTER

K4J or K4M

❑ Remove:

- the petrol injection computer nuts from the petrol injection computer mounting,
- the petrol injection computer.

K4J – K4M – F4R, and 770 or 771 or 776

F4R, and 770 or 771 or 776

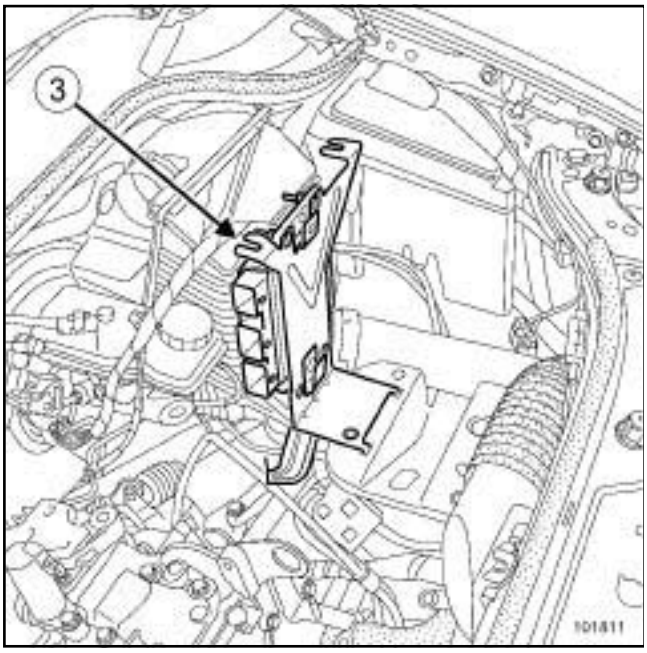

101811

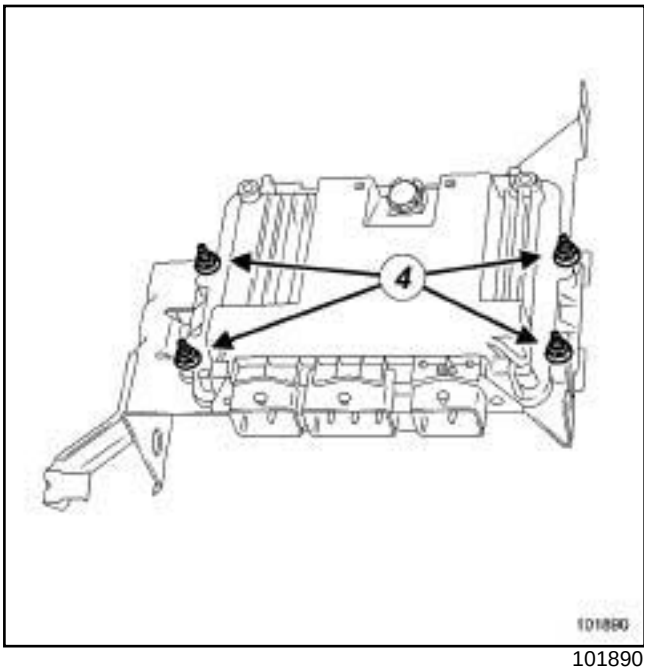

101890

❑ Remove:

- the petrol injection computer (**3**) with its mounting,
- the nuts (**4**) from the petrol injection computer.

REFITTING

I - REFITTING OPERATION FOR THE PETROL INJECTION COMPUTER

K4J or K4M

❑ Refit the petrol injection computer.

F4R, and 770 or 771 or 776

❑ Refit the petrol injection computer with its mounting.

II - FINAL OPERATION

K4J or K4M

❑ Connect:

- the petrol injection computer connectors.
- the battery (see **Battery : Removal - Refitting**) (80A, Battery),

F4R, and 770 or 771 or 776

❑ Connect the petrol injection computer connectors.

❑ Refit:

- the battery (see **Battery : Removal - Refitting**) (80A, Battery),
- the battery tray (see **Battery tray: Removal - Refitting**) (80A, Battery).

❑

Note:

When the ignition is switched on, the throttle valve should run a min and max throttle stop programming cycle.

❑ Using the **diagnostic tool** (CLIP) check that the programming has been carried out correctly **ET051: « Throttle stop programming »** .

K4J – K4M – F4R, and 770 or 771 or 776

- ❑ Perform flywheel target programming during a road test:

  In third gear, decelerate twice in succession from **4, 000 rpm** to power take-up speed.

  Power take-up speed is the moment when, during deceleration under no load with the injection cut out, the computer authorises injection again.
- ❑ Using the **diagnostic tool** (CLIP) check that the programming has been correctly carried out **ET089: « Flywheel target programming »**
- ❑ Read the fault codes.
- ❑ Repair if necessary.
- ❑ Clear the fault codes.
- ❑ Check that the vehicle is working correctly.

F4R, and 774

Essential equipment
diagnostic tool

WARNING

Do not use any product designed to improve the electrical contact in the injection computer and oxygen sensor connectors or on the bodies of the oxygen sensors.

Failure to respect this advice causes the oxygen sensor to malfunction and results in failure to comply with the emission control standard.

WARNING

If the connections are corroded, repair the wiring (see **Wiring: Precautions for repair**)(Technical Note 6015A, 88A, Wiring).

REMOVAL

I - REMOVAL PREPARATION OPERATION

❏ Remove the engine covers.

❏ Remove the battery (see **Battery : Removal - Refitting**) (80A, Battery).

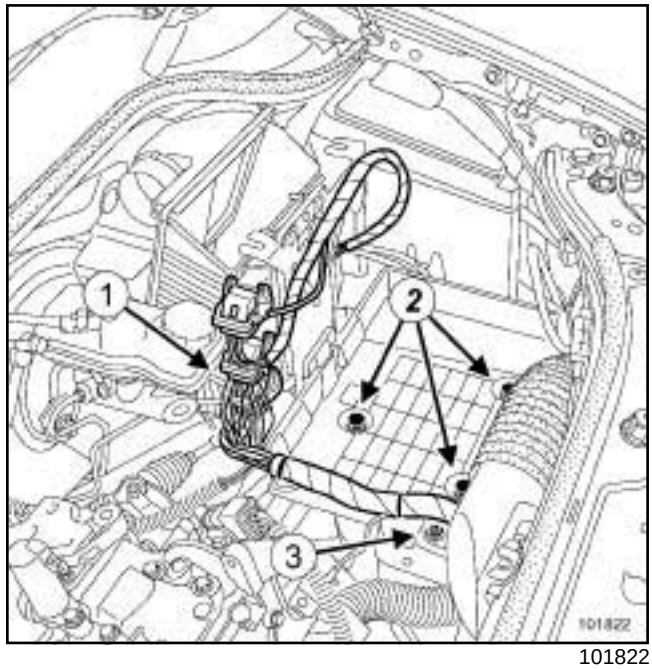

101822

❏ Disconnect the connectors (**1**) from the petrol injection computer.

❏ Remove:

- the three battery tray mounting bolts (**2**) ,
- the wiring harness bracket (**3**) .

❏ Unclip the wiring harnesses from the battery tray.

❏ Remove the battery tray (see **Battery tray: Removal - Refitting**) (80A, Battery).

F4R, and 774

II - REMOVAL OPERATION FOR THE PETROL INJECTION COMPUTER

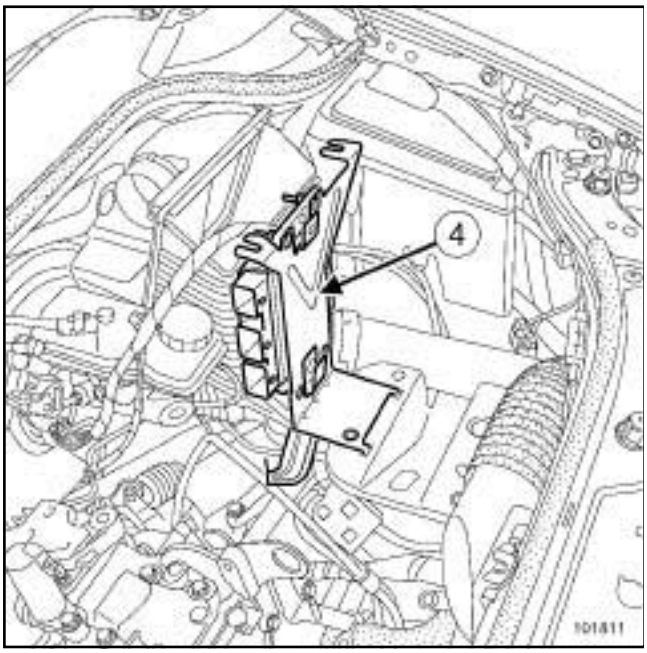

101811

❑ Remove the petrol injection computer and its support (**4**) .

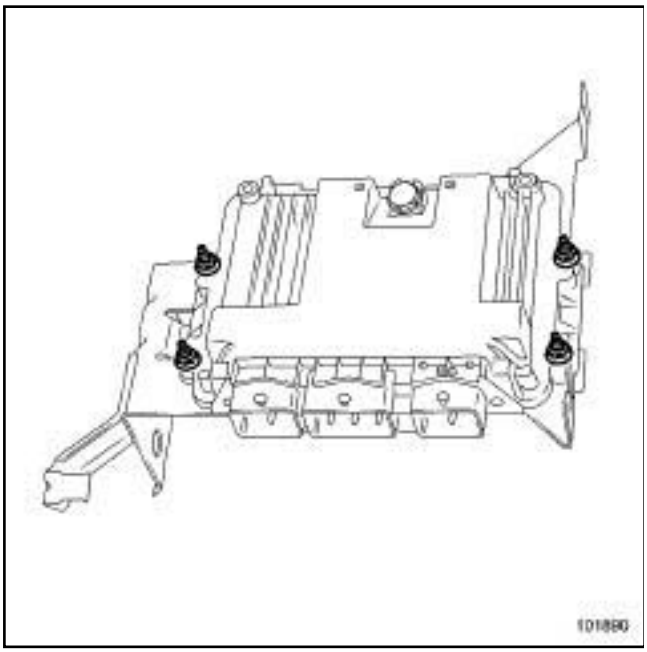

101890

❑ Remove the mounting bolts from the petrol injection computer.

REFITTING

I - REFITTING OPERATION FOR THE PETROL INJECTION COMPUTER

❑ Refit:

- the mounting bolts for the petrol injection computer onto its support,
- the petrol injection computer and its support.

❑ Refit the battery tray (see **Battery tray: Removal - Refitting**) (80A, Battery).

❑ Clip the electrical wiring harnesses onto the battery tray.

❑ Connect the connectors to the petrol injection computer.

❑ Refit the battery (see **Battery : Removal - Refitting**) (80A, Battery).

> Note:
>
> When the ignition is switched on, the throttle valve should go through a cycle to program the MIN and MAX throttle stop positions.

II - FINAL OPERATION

❑ Use the **diagnostic tool** to check that this programming has been carried out correctly **ET051 « Apprentissages butées papillon »** .

❑ Program the flywheel target during a road test.

❑ In third gear, decelerate twice in succession from **4, 000 rpm** to power take-up speed.

Power take-up speed is the moment when, during deceleration under no load with the injection cut out, the computer authorises injection again.

❑ Use the **diagnostic tool** to check that this programming has been carried out correctly **ET08R « Apprentissage cible volant moteur »** .

❑ Read the fault codes.

❑ Repair if necessary.

❑ Clear the fault codes.

❑ Check that the vehicle is working correctly.

❑ Refit the engine covers.

LPG injection: Precautions for repair

B84 or C84, and K4M, and 764 or 788

Note:

It is essential that you respect the following safety advice before carrying out any operation on a vehicle equipped with the LPG system.

I - AUTHORISED WORKSHOP

Repairs to the LPG system must only be carried out in workshops that meet the requirements for this type of operation.

The workshop must be equipped with a BC type approved extinguisher.

The operational area must be well ventilated.

Only workshops equipped with an LPG flare for draining the system may carry out work on the LPG tanks.

II - AUTHORISED STAFF

Only qualified personnel who have received training regarding the LPG system may carry out operations on the system.

III - SAFETY INSTRUCTIONS

LPG is heavier than air in its gaseous form; do not work in a basement garage.

When carrying out any type of work on the LPG system, do not wear clothes containing acrylic or any other material which could generate static electricity.

Keep naked flames and all ignition sources (sparks, cigarettes, mobile phones, etc.) away from the work area.

During any operation on the LPG circuit, place a sign on the driver's seat position: "WORK IN PROGRESS, DO NOT TOUCH", and place the following sign in the operating area "GAS WORK IN PROGRESS, DO NOT SMOKE".

If LPG comes into contact with the skin, it can cause frostbite due to the cold. It is advisable to wear protective gloves and goggles.

Before the operation, visually inspect that the LPG components are in good condition.

Carry out all of the operations with the battery disconnected.

When carrying out any operations on the LPG system, it is necessary to connect the vehicle to earth.

Before using the flare, it is essential to read the replacement frequencies and authorised frequency of use for the components of the flare, given by the supplier.

Never retighten a union under pressure.

Never plug a leaking union with filling product such as teflon sheath, sealed lug, etc.

Never reseal a union by adding a filling product. If the leak is still present after torque tightening, always replace the pipe.

Do not repair any of the LPG system faulty parts; they must always be replaced.

Never attempt to remove the fuel tank or any of its fixed components, without first having bled it (risk of explosion).

Do not replace components fixed onto the LPG tank (LPG tank polyvalve, LPG tank solenoid valve casing, LPG tank overpressure valve), replace the entire tank assembly.

When an LPG component is removed, it must immediately be replaced or refitted.

Do not wash the engine compartment with a pressurised system or using detergents. These can cause the expansion valve membranes to deteriorate.

After any operations are carried out on the LPG system, check the sealing on the entire gas supply circuit using leak detector (see **Vehicle: Parts and ingredients for the repairwork**) (MR 364, 04B, Consumables-Product).

Storing a tank which is not flared, drained and inerted with nitrogen is prohibited. All tanks replaced during a repair operation should be stored outside and away from any combustive material.

IV - IF THERE IS A GAS LEAK OR SMELL OF GAS

In the event of a significant gas leak, it is important to move the vehicle outside, away from any residential areas by pushing it, if necessary.

The emergency services may be required to intervene if the situation cannot be controlled.

V - INSTRUCTIONS TO BE FOLLOWED IF OPERATING ON THE HEAT SOURCE

LPG is stored in pressurised tanks. It is therefore advisable to avoid overheating.

Do not perform any solder operations and do not use a heat source close to the LPG tank and pipes, otherwise it will be necessary to drain the LPG tank and pipes (see **17C**, **LPG injection**, **LPG tank: Draining**, page **17C-5**) .

When the vehicle goes into a spray booth, refer to the repair precautions for painting (see **Paintwork: Precautions for repair**) (Technical Note 0592A, 90A, Paint: Precautions for repair).

LPG tank - pipe neck: Removal - Refitting

B84 or C84, and K4M, and 764 or 788

Essential special tooling	
Ms. 1787	Tools for removing and refitting LPG filling cups

Tightening torques ▽	
filler end piece bolts	**8 Nm**
neck - LPG tank pipe earth bolt on the body	**21 Nm**
neck - LPG tank pipe nut on the LPG tank polyvalve	**25 Nm**
filler cup	**8 Nm**

REMOVAL

❑ It is essential to read the repair precautions (see **17C**, **LPG injection**, **LPG injection: Precautions for repair**, page **17C-1**) .

❑ Park the vehicle outside.

❑ Disconnect the battery (see **Battery: Removal - Refitting**) (MR 364, 80A, Battery).

❑ Remove the rear right-hand wheel (see **Wheel: Removal - Refitting**) (MR 364, 35A, Wheels and tyres).

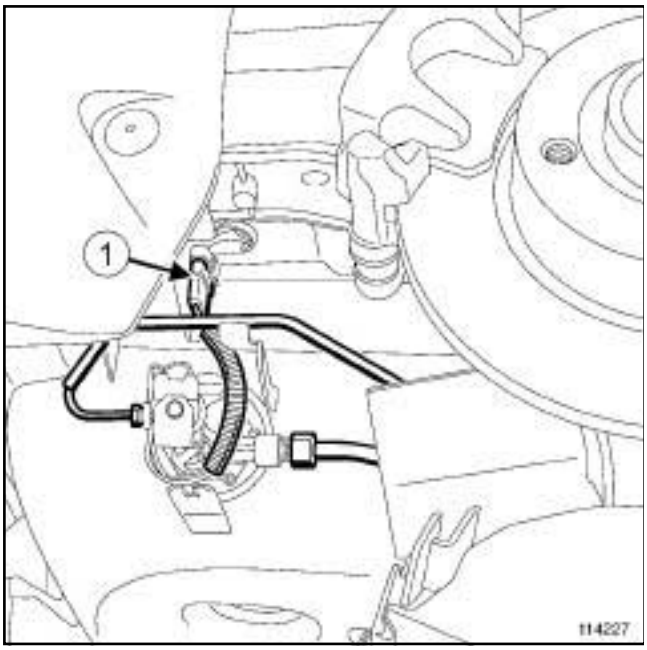

114227

❑ Disconnect the connector (**1**) from the safety solenoid valve.

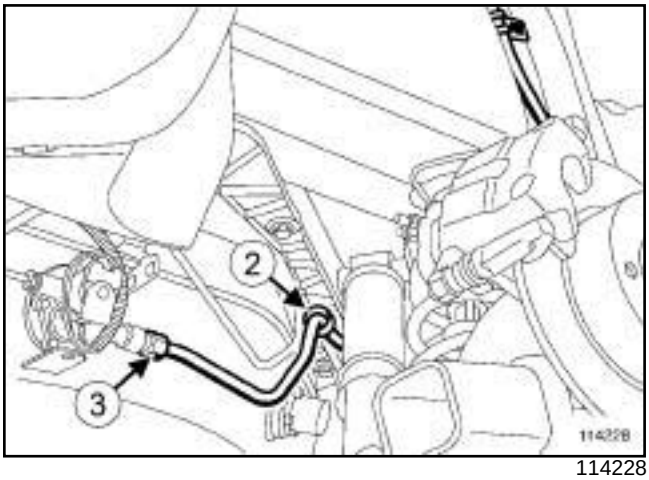

114228

❑ Drain the neck - LPG tank pipe:

- apply the leak detector (see **Vehicle: Parts and ingredients for the repairwork**) to the union (**3**) (MR 364, 04B, Consumables-Product).
- gradually undo the nut on the neck - LPG tank pipe (**3**) on the LPG tank safety solenoid valve and allow all of the gas to escape.

> **WARNING**
> When disconnecting the neck - tank pipe, do not damage the seal. If it is damaged, replace the entire neck - tank pipe assembly.

❑ Refit the rear right-hand wheel (see **Wheel: Removal - Refitting**) (MR 364, 35A, Wheels and tyres).

❑ Take the vehicle back inside.

❑ Position the vehicle on a two-post lift (see **Vehicle: Towing and lifting**) (MR 364, 02A, Lifting equipment).

❑ Remove the rear right-hand wheel (see **Wheel: Removal - Refitting**) (MR 364, 35A, Wheels and tyres).

❑ Remove the rear right-hand wheel arch liner (see **Rear wheel arch liner: Removal - Refitting**) (MR 365, 55A, Exterior protection).

❑ Unclip the filler neck-LPG tank pipe at (**2**) .

B84 or C84, and K4M, and 764 or 788

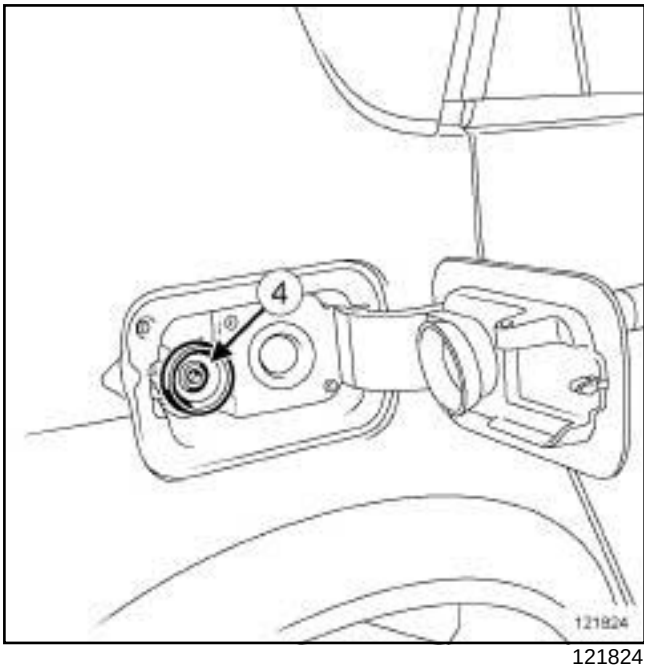

121824

❑ Remove the filler cup (**4**) on the filler end piece using the **(Ms. 1787)**.

> Note:
>
> The shape of the filler cups varies depending on the country.

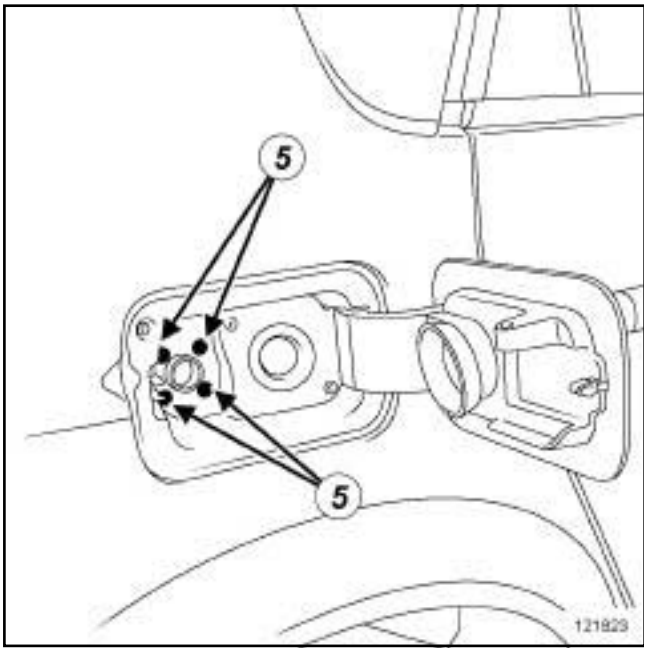

121823

❑ Remove the filler end piece bolts (**5**) .

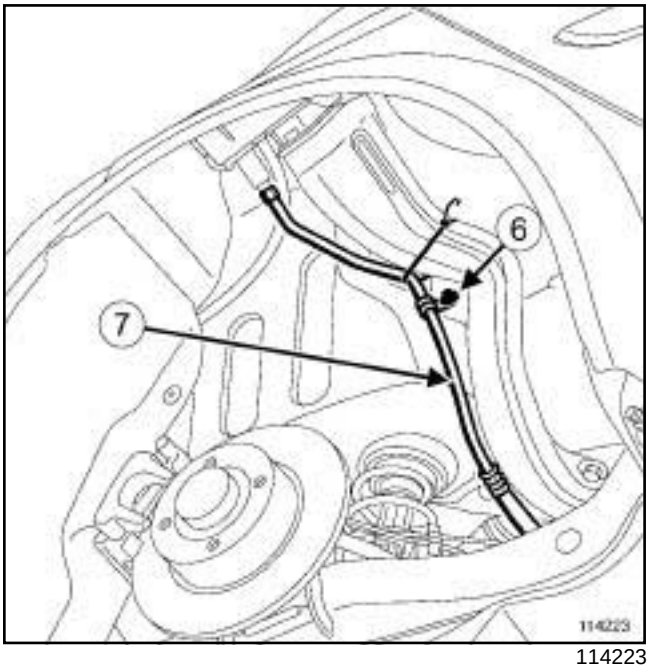

114223

❑ Remove:

- the earth bolt (**6**) of the neck - tank pipe,
- the neck - LPG tank pipe (**7**) .

REFITTING

❑ Fit the neck - LPG tank pipe ***(7)*** making sure the seal is present.

❑ Pretighten:

- the earth bolt ***(6)*** of the neck - LPG tank pipe on the body,
- the filler end piece bolts ***(5)*** .

❑ Pre-tighten the nut of the neck - LPG tank pipe on the LPG tank polyvalve by hand ***(3)*** .

❑ Clip on the filler neck-tank pipe at ***(2)*** .

❑ Always replace the filler cup.

❑ Tighten to torque:

- the **filler end piece bolts (8 Nm)** at ***(5)*** ,
- the **neck - LPG tank pipe earth bolt on the body (21 Nm)** at ***(6)*** ,
- the **neck - LPG tank pipe nut on the LPG tank polyvalve (25 Nm)** at ***(3)*** ,
- the **filler cup (8 Nm)** using the **(Ms. 1787)** at ***(4)*** .

❑ Connect the connector ***(1)*** to the safety solenoid valve.

B84 or C84, and K4M, and 764 or 788

❑ Refit:

- the rear right-hand wheel (see **Wheel: Removal - Refitting**) (MR 364, 35A, Wheels and tyres),
- the rear right-hand wheel arch liner (see **Rear wheel arch liner: Removal - Refitting**) (MR 365, 55A, Exterior protection).

❑ Connect the battery (see **Battery : Removal - Refitting**) (MR 364, 80A, Battery).

B84 or C84, and K4M, and 764 or 788

Essential special tooling	
Ms. 1826	Magnet for manually opening the LPG/CNG tank solenoid valve

Essential equipment
pneumatic or electric wrench

Tightening torques ▽	
LPG tank solenoid valve coil bolt	**5 Nm**
LPG supply pipe nut on the polyvalve	**18 Nm**
LPG tank polyvalve protective cover bolts	**2 Nm**

DRAINING

I - DRAINING PREPARATION OPERATION

❑ It is essential to read the repair precautions (see **17C**, **LPG injection**, **LPG injection: Precautions for repair**, page **17C-1**) .

❑

> Note:
>
> Refer to the instructions for use of the AEM LPG igniter in addition to the installation instructions below.

❑ Park the vehicle outside.

❑ Disconnect the battery (see **Battery: Removal - Refitting**) (MR 364, 80A, Battery).

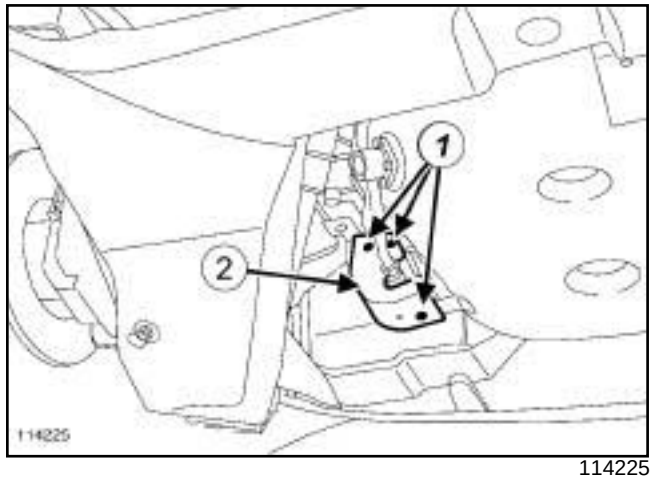

114225

❑ Remove:

- the protective cover bolts (**1**) from the LPG tank polyvalve (**2**) ,
- the LPG tank polyvalve protective cover (**2**) ,

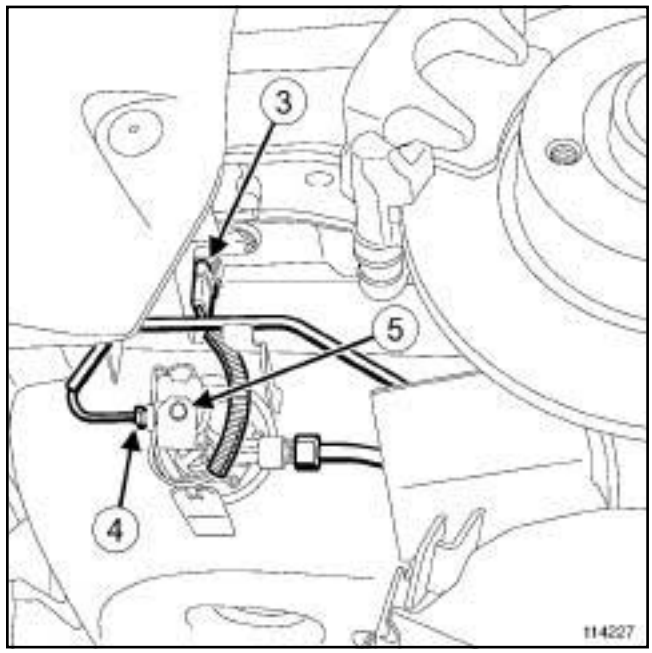

114227

❑ Disconnect the connector (**3**) from the LPG tank polyvalve.

❑ Drain the LPG supply pipe:

- apply leak detector to the union (**4**) (see **Vehicle: Parts and ingredients for the repairwork**) (MR 364, 04B, Consumables-Product),
- gradually undo the supply pipe nut (**4**) on the LPG tank polyvalve and allow all of the gas to escape.

II - DRAINING OPERATION

❑ Remove the LPG tank solenoid valve coil bolt ***(5)*** .

B84 or C84, and K4M, and 764 or 788

- ❑ Remove the LPG tank solenoid valve coil from its position.
- ❑ For flaring, use the **pneumatic or electric wrench**.
- ❑ Position the flare in a stable position in the flare area.
- ❑ Position the « TWINY » bottle further than **5 metres** away from the flare.
- ❑ Position the tank to be emptied further than **10 metres** away from the flare.
- ❑

> Note:
>
> The "TWINY" propane bottle and the nitrogen bottle are not supplied with the flare.

- ❑ Ensure that all valves of all circuits are closed.
- ❑ To connect the pilot flame hose between the flare and the « TWINY » bottle:
  - Connect the quick-release union to the flare pilot flame end piece.
  - Clip the expansion valve to the bottle. The valve must be closed.
- ❑ For the connection between the tank and the flare:
  - Connect the self-sealing union on the end of the hose to the flare connection end piece, with the valve closed.
  - Fit the special pipes to the outlet of the LPG tank.
  - Connect the self-sealing joint at the end of the hose to the connection socket of the special pipes.
- ❑ To connect the nitrogen circuit:
  - Position the nitrogen bottle near the LPG tank.
  - Attach the expansion valve onto the nitrogen bottle and tighten the expansion valve union.
  - Connect the special nitrogen pad to the LPG tank filler orifice, tighten manually. (make sure there is a seal).
  - After a check of all the seals to ensure there are no leaks, the system is ready for use.
- ❑ To light the pilot flame (operator correctly attired):
  - Open the «TWINY» bottle expansion valve switch.
  - Introduce a flame into the opening provided in the flare cylinder to light the pilot flame.
  - Check that the pilot flame is properly lit.
- ❑ To light the igniter:
  - The operator must be **at least 10 metres** away from the flare and must ensure that this precaution is respected by everyone.
  - Control the tank solenoid valve by putting the **(Ms. 1826)** in place of the coil.
  - Open the progressive flow valve to position 1 (the maximum position is 5).
  - The igniter lights.
  - Check the passage of the liquid gas through the circulation indicator.
  - Adjust the opening of the progressive flow control valve, increasing its opening to position 2 or 3 until the flow lines equalise through the circulation indicator.
  - Try to open the progressive flow control valve slowly so as to not trigger the tank flow limiter. If the limiter is triggered, close the flow valve and start the operation again.
  - After the flow has equalised, open the nitrogen bottle and adjust the expansion valve to a pressure **1 bar** greater than the tank pressure (but not greater than **7 bar**).
- ❑ After the main flame has gone out, let the nitrogen flame sweep at 3 bars with the flow valve completely open for **1 minute** per **10 litres** capacity (e.g: for a **60 litre** tank: sweeping = **6 min**).
- ❑ Close the tank solenoid valve and remove the **(Ms. 1826)**.
- ❑ Close the nitrogen circuit by resetting the expansion valve and closing the tap on the nitrogen bottle.
- ❑ Shut off the pilot flame by closing the expansion valve switch on the « TWINY » gas bottle.
- ❑ Close the progressive flow valve.

> **WARNING**
>
> The flare should be left in place until it has cooled completely. Move the flare using the two side handles.

- ❑ Disconnect all of the unions.
- ❑ Wind up the hoses.
- ❑ Put away the equipment.
- ❑ Put the solenoid valve coil back into position.
- ❑ Torque tighten the **LPG tank solenoid valve coil bolt (5 Nm)** ***(5)*** .

B84 or C84, and K4M, and 764 or 788

III - REFITTING OPERATION AFTER DRAINING

- ❑ Pretighten by hand the LPG supply pipe nut ***(4)*** on the polyvalve.
- ❑ Torque tighten the **LPG supply pipe nut on the polyvalve (18 Nm)** ***(4)*** .
- ❑ Refit:
  - the LPG polyvalve protective cover ***(2)*** .
  - the protective cover bolts ***(1)*** to the LPG tank polyvalve ***(2)*** ,
- ❑ Torque tighten the **LPG tank polyvalve protective cover bolts (2 Nm)** and seal the LPG tank polyvalve protective cover bolts tightening torque using an indelible marker.
- ❑ Reconnect the tank polyvalve connector ***(3)*** .
- ❑ Check the sealing of the union ***(4)*** between the LPG supply pipe and the LPG tank polyvalve with leak detector (see **Vehicle: Parts and ingredients for the repairwork**) (MR 364, 04B, Consumables-Product):
  - fill the tank with several litres of LPG,
  - start the engine, and operate it in "gas" mode,
  - apply leak detector and check that there are no leaks on the union,
  - wait for 5 minutes,
  - check that there are no leaks on the union,
  - fill up the tank,
  - start the engine, and operate it in "gas" mode,
  - apply leak detector and check that there are no leaks on the union,
  - wait for 5 minutes,
  - check that there are no leaks on the union.

B84 or C84, and K4M, and 764 or 788

Essential equipment
component jack

Tightening torques ▽	
LPG tank mounting bolts	**21 Nm**
heat shield bolts on the LPG tank	**4 Nm**
neck - LPG tank pipe nut	**25 Nm**
LPG supply pipe nut	**18 Nm**
LPG tank polyvalve protective cover bolts	**2 Nm**

REMOVAL

❑ It is essential to read the repair precautions (see **17C**, **LPG injection**, **LPG injection: Precautions for repair**, page **17C-1**) .

❑ Park the vehicle outside.

❑ Disconnect the battery (see **Battery: Removal - Refitting**) (MR 364, 80A, Battery).

❑ Remove the rear right-hand wheel (see **Wheel: Removal - Refitting**) (MR 364, 35A, Wheels and tyres).

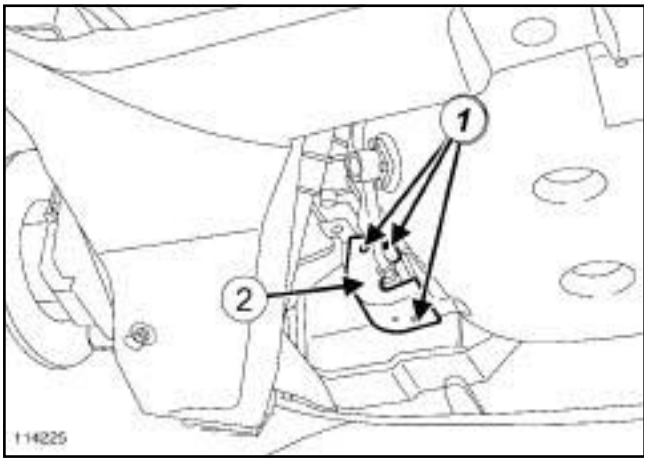

114225

❑ Remove:

- the mounting bolts (**1**) from the LPG tank polyvalve protection,
- the LPG tank polyvalve protection (**2**) .

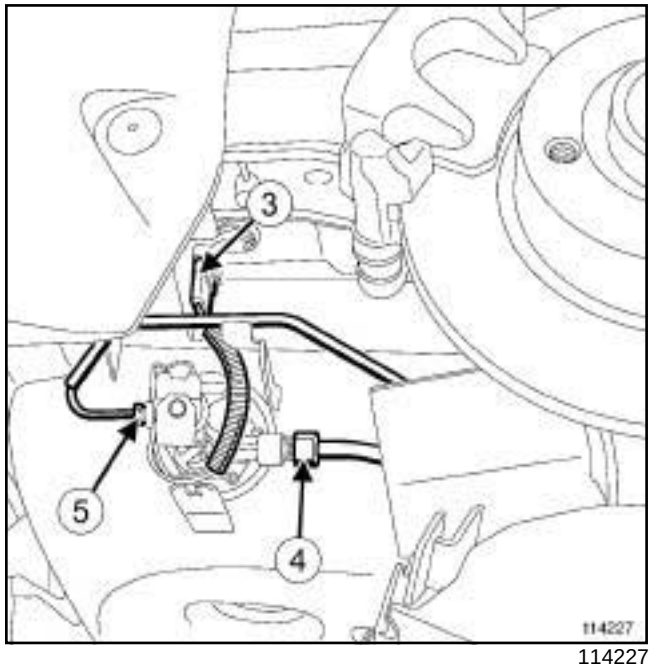

114227

❑ Disconnect the connector (**3**) from the LPG tank polyvalve.

❑

> **WARNING**
> When disconnecting the neck-LPG tank pipe, do not damage the seal; if it is damaged, replace the complete neck pipe.

Drain the neck - LPG tank pipe:

- apply leak detector to the union (**4**) (see **Vehicle: Parts and ingredients for the repairwork**) (MR 370, 04B, Consumables-Product),
- gradually undo the neck - LPG tank pipe nut (**4**) on the LPG tank polyvalve and allow all of the gas to escape.

❑ Drain the LPG supply pipe:

- apply leak detector to the union (**5**) (see **Vehicle: Parts and ingredients for the repairwork**) (MR 370, 04B, Consumables-Product),
- gradually undo the supply pipe nut (**5**) on the LPG tank polyvalve and allow all of the gas to escape.

❑ Refit the rear right-hand wheel (see **Wheel: Removal - Refitting**) (MR 364, 35A, Wheels and tyres).

❑ Drain the LPG tank (see **17C**, **LPG injection**, **LPG tank: Draining**, page **17C-5**) .

❑ Take the vehicle back inside.

❑ Position the vehicle on a two-post lift (see **Vehicle: Towing and lifting**) (MR 364, 02A, Lifting equipment).

B84 or C84, and K4M, and 764 or 788

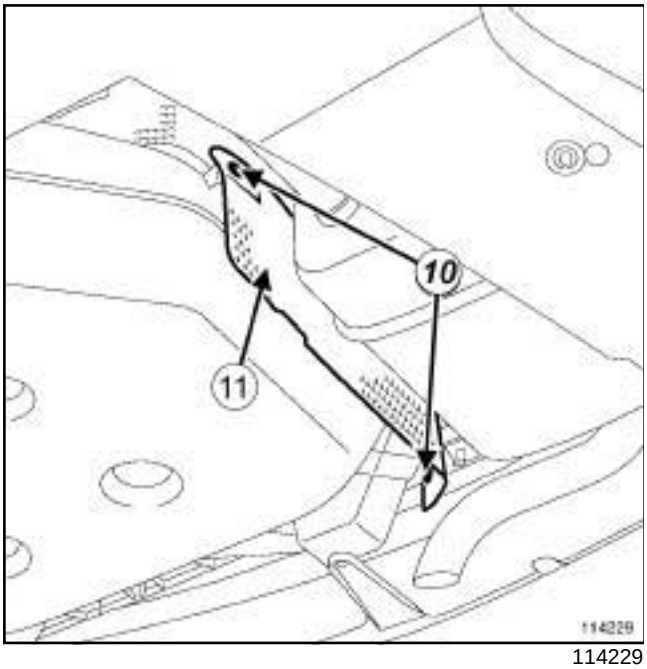

114229

❑ Remove:

- the bolts (**10**) from the heat shield on the LPG tank,
- the LPG tank heat shield (**11**) .

❑ Fit the **component jack**.

B84 or C84, and K4M, and 764 or 788

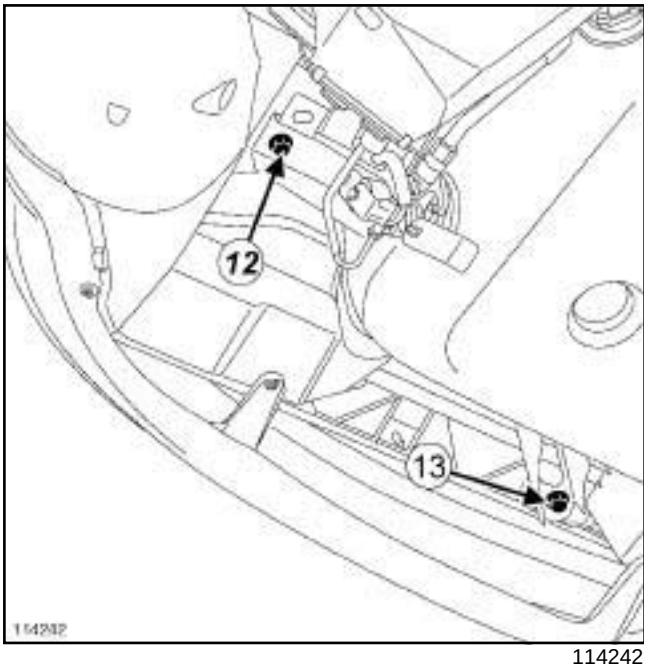

114242

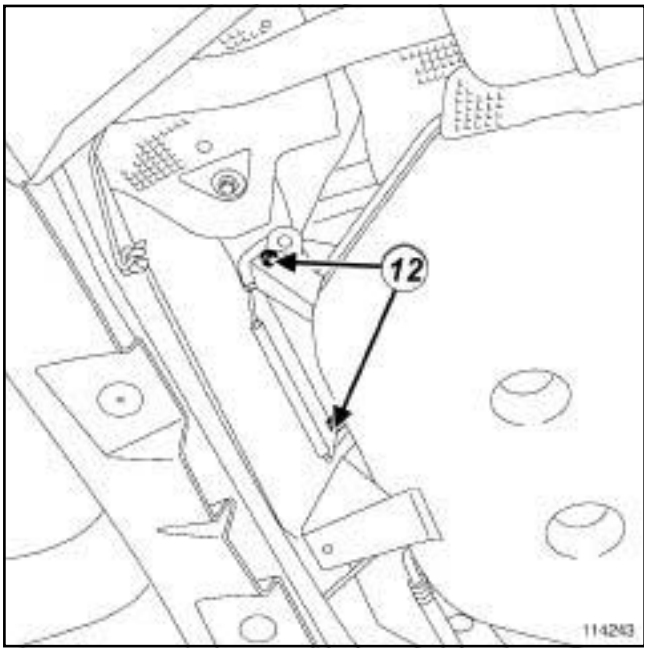

114243

❑

WARNING
The LPG tank bolts are not the same length (3 "short" bolts and 1 "long" bolt).

❑ Remove:

- the LPG tank "short" bolts (**12**) ,
- the "long" bolt (**13**)
- the LPG tank.

IMPORTANT
Store the old tank outside and away from any combustible material.

REFITTING

❑ Fit the **component jack**.

❑ Refit:

- the LPG tank,
- the LPG tank "short" bolts ***(12)*** ,
- the LPG tank "long" bolt ***(13)*** , respecting its initial position.

❑ Torque tighten the **LPG tank mounting bolts (21 Nm)**.

❑ Refit:

- the LPG tank heat shield ***(11)*** ,
- the heat shield bolts ***(10)*** on the LPG tank,

❑ Torque tighten the **heat shield bolts on the LPG tank (4 Nm)**.

❑ Manually pretighten:

- the neck - LPG tank pipe nut ***(4)*** ,
- the LPG supply pipe nut ***(5)*** .

WARNING
When connecting the gas filler pipe, take care not to damage the seal.

❑ Torque tighten:

- the **neck - LPG tank pipe nut (25 Nm)** ***(4)*** ,
- the **LPG supply pipe nut (18 Nm)** ***(5)*** .

❑ Refit:

- the LPG tank polyvalve protective cover ***(2)*** ,
- the LPG tank polyvalve protective cover bolts ***(1)*** .

❑ Torque tighten the **LPG tank polyvalve protective cover bolts (2 Nm)** and seal the LPG tank polyvalve protective cover bolts tightening torque using an indelible marker.

❑ Connect the LPG tank polyvalve connector ***(3)*** .

❑ Connect the battery (see **Battery : Removal - Refitting**) (MR 364, 80A, Battery).

B84 or C84, and K4M, and 764 or 788

❑ Check the sealing of the union ***(5)*** between the LPG supply pipe and the LPG tank polyvalve with leak detector (see **Vehicle: Parts and ingredients for the repairwork**) :

- fill the tank with several litres of LPG,
- start the engine, and operate it in "gas" mode,
- apply leak detector and check that there are no leaks on the union,
- wait for 5 minutes,
- check that there are no leaks,
- fill up the tank,
- start the engine, and operate it in "gas" mode,
- apply leak detector and check that there are no leaks on the union,
- wait for 5 minutes,
- check that there are no leaks .

LPG expansion valve: Removal - Refitting

B84 or C84, and K4M, and 764 or 788

Essential special tooling	
Ms. 583	Hose clamp pliers.
Mot. 1202-01	Pliers for large hose clips.
Mot. 1202-02	Pliers for small hose clips.
Mot. 1448	Long nose pliers for hose clips.

Tightening torques ▽	
expansion valve unit bolt	**8 N.m**
LPG supply pipe nut	**18 N.m**

REMOVAL

❑ It is essential to read the repair precautions (see **17C**, **LPG injection**, **LPG injection: Precautions for repair**, page **17C-1**) .

❑ Remove the battery (see **Battery : Removal - Refitting**) (80A, Battery).

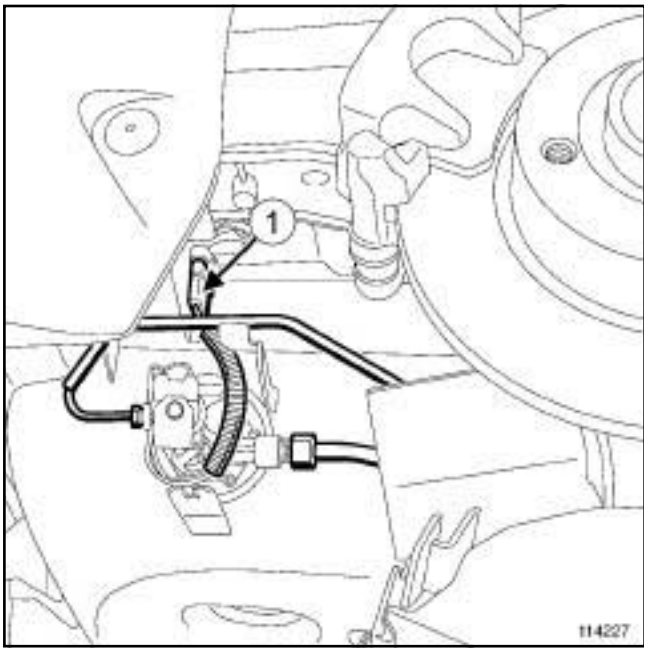

114227

❑ Disconnect the connector (**1**) from the LPG polyvalve.

❑ Remove:

- the battery tray (see **Battery tray: Removal - Refitting**) (80A, Battery),
- the LPG computer (see **17C**, **LPG injection**, **LPG computer: Removal - Refitting**, page **17C-24**) .

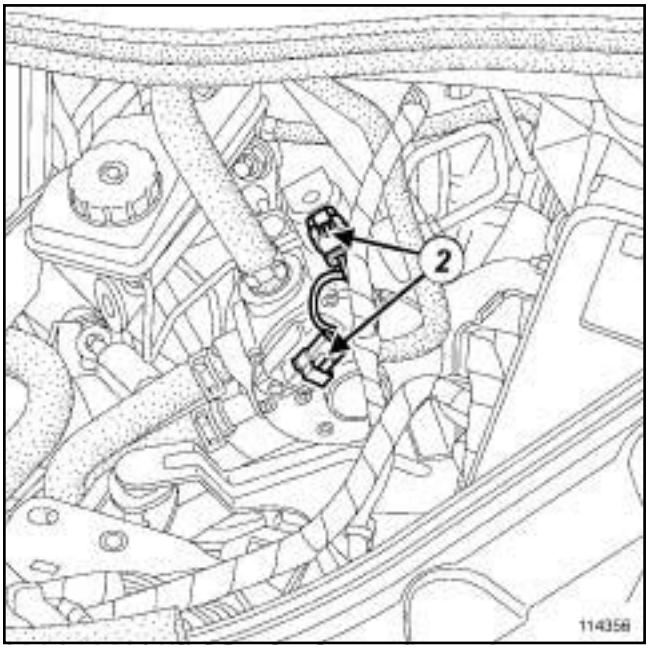

114356

❑ Disconnect the connectors (**2**) from the pressure sensor and the expansion valve solenoid valve.

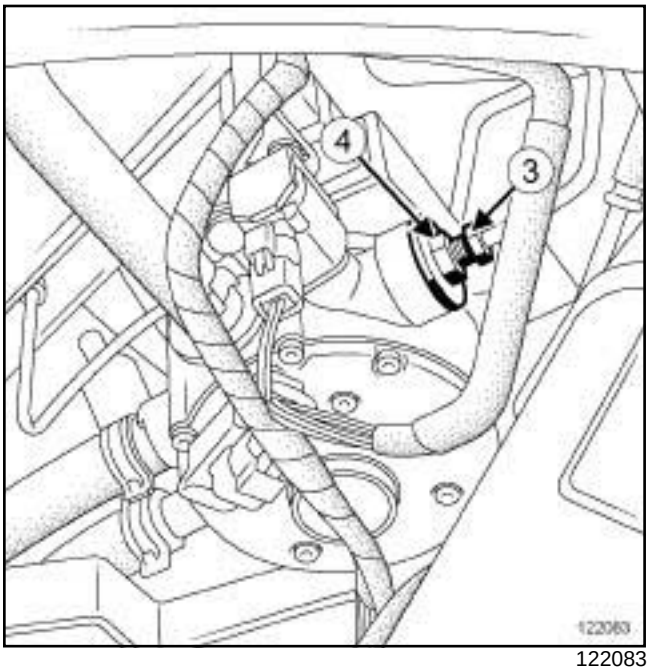

122083

❑ Drain the LPG supply pipe:

- hold the nut (**4**) with a spanner to prevent it loosening during the draining operation,
- apply **LEAK DETECTOR** to the union (see **Vehicle: Parts and ingredients for the repairwork**) (04B, Consumables - Products),
- gradually undo the LPG pipe nut (**3**) on the expansion valve unit and allow all of the gas to escape.

B84 or C84, and K4M, and 764 or 788

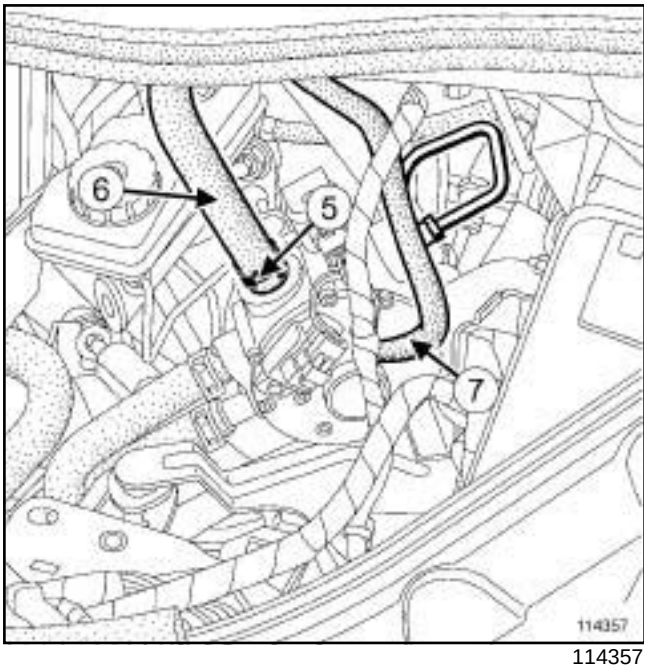

114357

- ❑ Remove the clip (**5**) .
- ❑ Disconnect:
  - the expansion valve-LPG injection rail pipe (**6**) ,
  - the reference pressure pipe (**7**) .

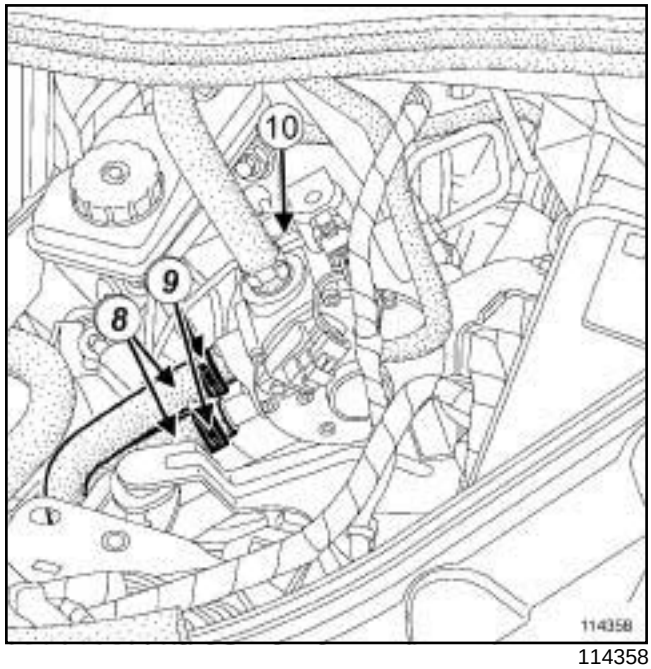

114358

- ❑ Fit the tool **(Ms. 583)** on the coolant hoses (**8**) .
- ❑ Remove the clips (**9**) on the coolant hoses using the tool **(Mot. 1202-01)** or **(Mot. 1202-02)** or **(Mot. 1448)**,
- ❑ Disconnect the coolant hoses (**8**) ,
- ❑ Remove:
  - the expansion valve unit bolt (**10**) ,
  - the expansion valve unit.

REFITTING

- ❑ Refit the expansion valve unit.
- ❑ Torque tighten the **expansion valve unit bolt (8 N.m)** ***(10)*** .
- ❑ Connect the coolant hoses.
- ❑ Fit the clips on the coolant hoses using the tool **(Mot. 1202-01)** or **(Mot. 1202-02)** or **(Mot. 1448)**.
- ❑ Remove the tool **(Ms. 583)** from the coolant hoses.
- ❑ Connect the reference pressure pipe ***(7)*** .
- ❑ Always replace the expansion valve - LPG injector rail pipe clip ***(5)*** .
- ❑ Refit the expansion valve-LPG injector rail pipe ***(6)*** .
- ❑ Pretighten by hand the LPG supply pipe nut ***(3)*** .
- ❑ Torque tighten the **LPG supply pipe nut (18 N.m)** ***(3)*** .
- ❑ Connect the connectors of the pressure sensor and the expansion valve solenoid valve ***(2)*** .

B84 or C84, and K4M, and 764 or 788

- Refit:
  - the LPG computer (see **17C**, **LPG injection**, **LPG computer: Removal - Refitting**, page **17C-24**) ,
  - the battery tray (see **Battery tray: Removal - Refitting**) (80A, Battery).
- Connect the LPG polyvalve connector ***(1)*** .
- Refit the battery (see **Battery : Removal - Refitting**) (80A, Battery).
- Fill and bleed the cooling system (see **19A**, **Cooling**, **Cooling circuit: Draining - Refilling**, page **19A-15**) .
- Use **LEAK DETECTOR** to check the sealing on all of the expansion valve unit unions containing gas (see **Vehicle: Parts and ingredients for the repairwork**) (04B, Consumables - Products):
  - start the engine, and operate it in "gas" mode,
  - apply leak detector and check that there are no leaks on the union,
  - wait for **5 minutes**,
  - check that there are no leaks on the union.

LPG pressure sensor: Removal - Refitting

B84 or C84, and K4M, and 764 or 788

Essential special tooling	
Mot. 1608	Torque screwdriver 1 to 6.6 N.m.

Tightening torques ▽	
pressure sensor mounting bolts	**1.6 Nm**

REMOVAL

❑ It is essential to read the repair precautions (see **17C**, **LPG injection**, **LPG injection: Precautions for repair**, page **17C-1**) .

❑ Remove the battery (see **Battery : Removal - Refitting**) (MR 364, 80A, Battery).

❑ Remove the battery tray (see **Battery tray: Removal - Refitting**) (MR 364, 80A, Battery).

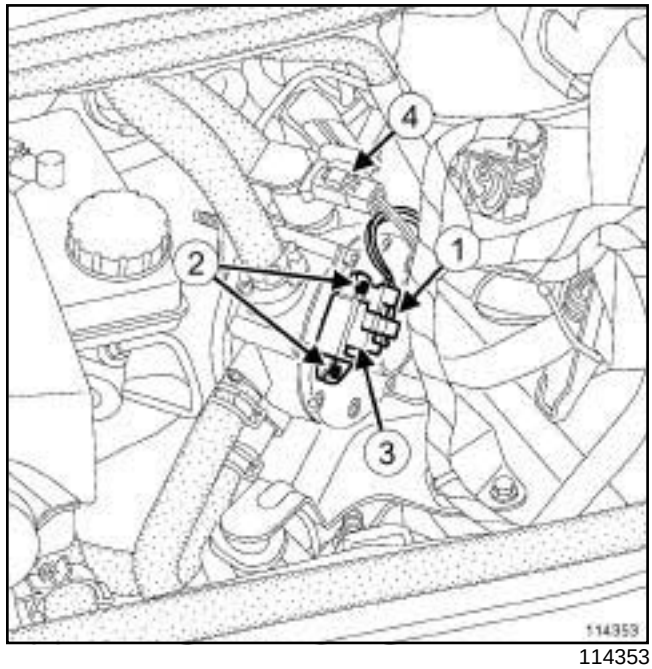

114353

❑ Disconnect the connector (**1**) from the pressure sensor (**3**) .

❑ Disconnect the connector (**4**) from the expansion valve solenoid valve.

❑

> **IMPORTANT**
> Watch our for gas being released when removing the pressure sensor.

❑ Remove:

- the mounting bolts (**2**) from the pressure sensor (**3**) ,
- the pressure sensor (**3**) .

REFITTING

❑ Refit:

- the pressure sensor ***(3)*** ,
- the mounting bolts ***(2)*** to the pressure sensor ***(3)*** .

❑ Use the **(Mot. 1608)** to torque tighten the **pressure sensor mounting bolts (1.6 Nm)** ***(2)*** .

❑ Connect the connector ***(1)*** to the pressure sensor ***(3)*** .

❑ Connect the expansion valve solenoid valve connector ***(4)*** .

❑ Refit the battery tray (see **Battery tray: Removal - Refitting**) (MR 364, 80A, Battery).

B84 or C84, and K4M, and 764 or 788

- Refit the battery (see **Battery : Removal - Refitting**) (MR 364, 80A, Battery).
- Check the pressure sensor sealing on the expansion valve unit using leak detector (see **Vehicle: Parts and ingredients for the repairwork**) (MR 364, 04B, Consumables-Product):
  - start the engine, and operate it in "gas" mode,
  - apply leak detector between the pressure sensor and the expansion valve unit and check for any leaks,
  - wait for 5 minutes,
  - check that there are no leaks .

B84 or C84, and K4M, and 764 or 788

Tightening torques ▽	
expansion valve solenoid valve coil mounting bolt	**2 Nm**

REMOVAL

- It is essential to read the repair precautions (see **17C**, **LPG injection**, **LPG injection: Precautions for repair**, page **17C-1**) .
- Disconnect the battery (see **Battery: Removal - Refitting**) (MR 364, 80A, Battery).

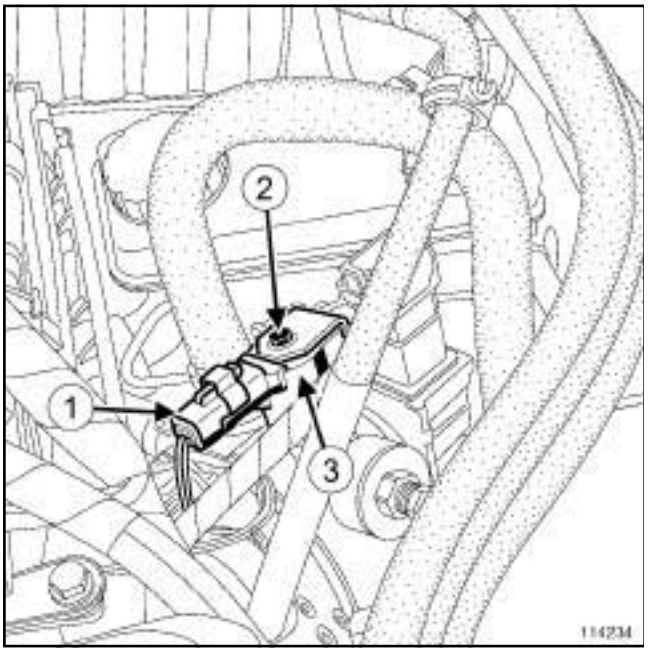

114234

- Disconnect the connector (**1**) from the solenoid valve solenoid valve coil (**3**) .
- Remove the expansion valve solenoid valve coil mounting bolt (**2**) .
- Remove the expansion valve solenoid valve coil (**3**) .

REFITTING

- Refit the expansion valve solenoid valve coil ***(3)*** .
- Torque tighten the **expansion valve solenoid valve coil mounting bolt (2 Nm)** ***(2)*** .
- Connect the expansion valve solenoid valve coil connector ***(1)*** .
- Connect the battery (see **Battery : Removal - Refitting**) (MR 364, 80A, Battery).

B84 or C84, and K4M, and 764 or 788

Tightening torques ▽	
LPG expansion valve outlet union mounting bolts	**2.5 Nm**

REMOVAL

❑ It is essential to read the repair precautions (see **17C**, **LPG injection**, **LPG injection: Precautions for repair**, page **17C-1**) .

❑ Disconnect the battery (see **Battery: Removal - Refitting**) (MR 364, 80A, Battery).

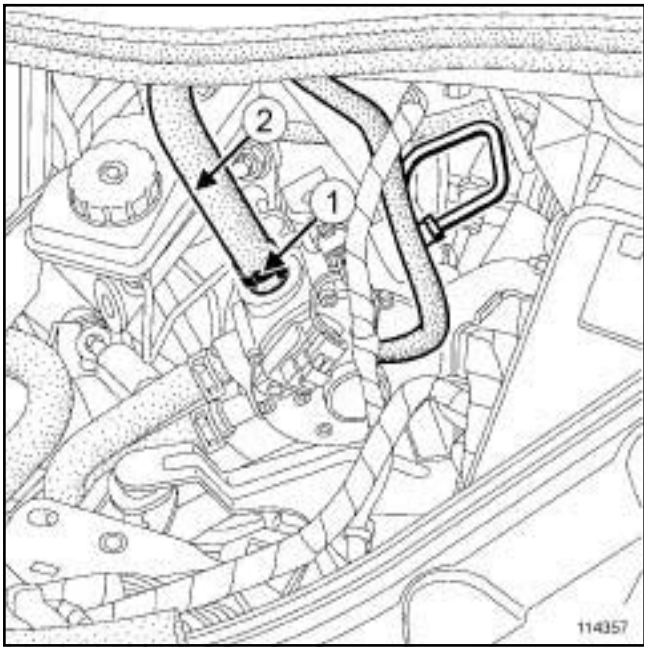

114357

❑ Remove the LPG injector rail - expansion valve pipe clip (**1**) on the expansion valve unit side.

❑ Disconnect the LPG injector rail - expansion valve pipe (**2**) on the expansion valve unit side.

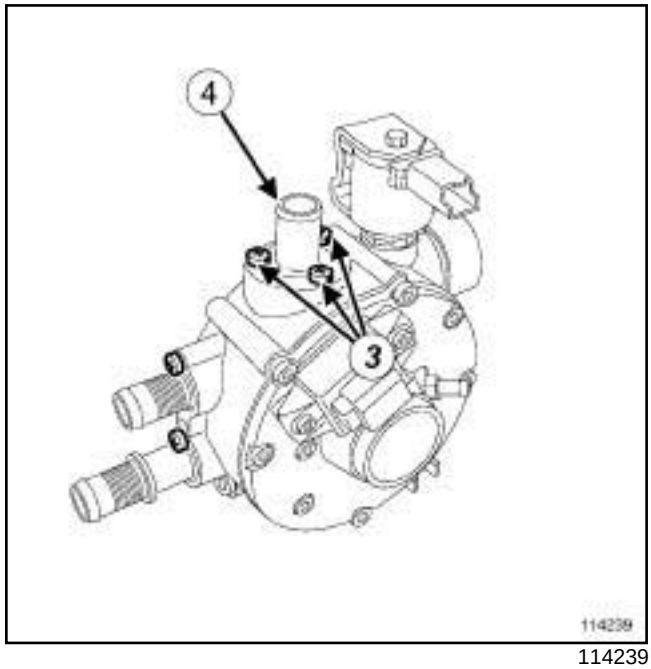

114239

❑ Remove:

- the mounting bolts (**3**) from the LPG expansion valve outlet union,
- the LPG expansion valve outlet union (**4**) .

REFITTING

❑ Refit the LPG expansion valve outlet union.

❑ Torque tighten the **LPG expansion valve outlet union mounting bolts (2.5 Nm)**.

❑ Always replace the expansion valve - LPG injector rail pipe clip on the expansion valve unit side.

❑ Reconnect the expansion valve - LPG injector rail pipe on the expansion valve unit side.

❑ Refit the expansion valve - LPG injector rail pipe clip on the expansion valve unit side.

❑ Connect the battery (see **Battery: Removal - Refitting**) (MR 364, 80A, Battery).

❑ Check the sealing of the union between the expansion valve - LPG injector rail pipe and the expansion valve unit using leak detector (see **Vehicle: Parts and ingredients for the repairwork**) (MR 364, 04B, Consumables-Product):

- start the engine, and operate it in "gas" mode,
- apply leak detector to the union and check that there are no leaks,
- wait for 5 minutes,
- check that there are no leaks on the union.

Coolant circuit union: Removal - Refitting

B84 or C84, and K4M, and 764 or 788

Essential special tooling	
Ms. 583	Hose clamp pliers.
Mot. 1202-01	Pliers for large hose clips.
Mot. 1202-02	Pliers for small hose clips.
Mot. 1448	Long nose pliers for hose clips.

Tightening torques ▽	
cooling system union bolts	**2.5 N.m**

REMOVAL

❑ It is essential to read the repair precautions (see **17C**, **LPG injection**, **LPG injection: Precautions for repair**, page **17C-1**) .

❑ Remove:

- the battery (see **Battery : Removal - Refitting**) (80A, Battery),
- the battery tray (see **Battery tray: Removal - Refitting**) (80A, Battery).

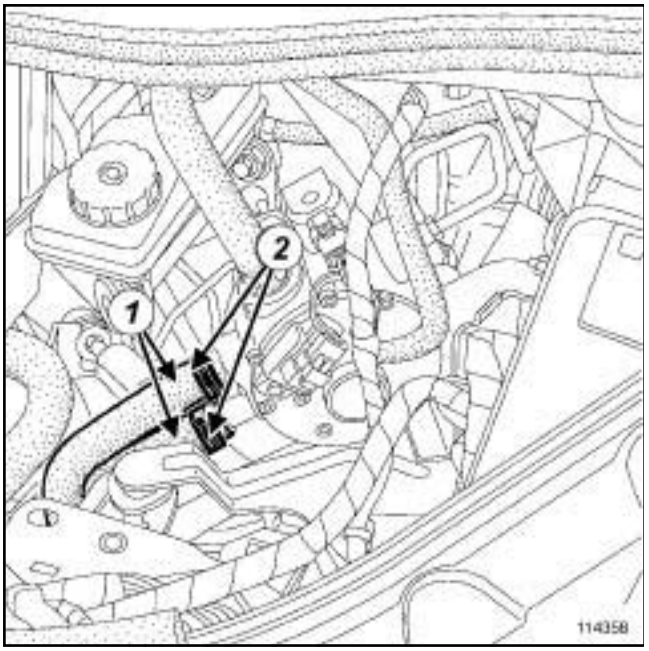

114358

❑ Fit the tool **(Ms. 583)** on the coolant pipes (**1**) .

❑ Remove the clips (**2**) from the coolant pipes using the tool **(Mot. 1202-01)** or **(Mot. 1202-02)** or **(Mot. 1448)**.

❑ Disconnect the coolant pipes (**1**) .

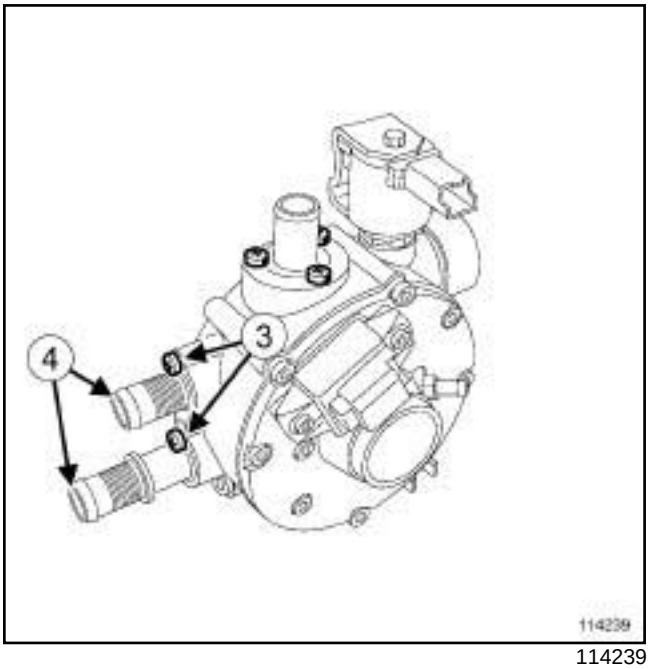

114239

❑ Remove:

- the cooling system union bolts (**3**) ,
- the cooling system unions (**4**) .

REFITTING

❑ Replace the coolant system union seals.

❑ Refit the cooling system unions ***(4)*** .

❑ Torque tighten the **cooling system union bolts (2.5 N.m)** ***(3)*** .

❑ Connect the coolant inlet and outlet pipes.

❑ Refit:

- the clips on the coolant pipes using the tool **(Mot. 1202-01)** or **(Mot. 1202-02)** or **(Mot. 1448)**,
- the battery tray (see **Battery tray: Removal - Refitting**) (80A, Battery),
- the battery (see **Battery : Removal - Refitting**) (80A, Battery).

❑ Fill and bleed the cooling system (see **19A**, **Cooling**, **Cooling circuit: Draining - Refilling**, page **19A-15**) .

B84 or C84, and K4M, and 764 or 788

Tightening torques ▽	
LPG and petrol injector rail nuts	**10 Nm**
injector rail protector nuts	**21 Nm**
injector rail wiring harness bolt	**10 Nm**

REMOVAL

❑

IMPORTANT
Watch out for gas being released when disconnecting the gas pipes and avoid any contact with heat and nearby people.

❑ It is essential to read the repair precautions (see **17C**, **LPG injection**, **LPG injection: Precautions for repair**, page **17C-1**) .

❑ Disconnect the battery (see **Battery: Removal - Refitting**) (MR 364, 80A, Battery).

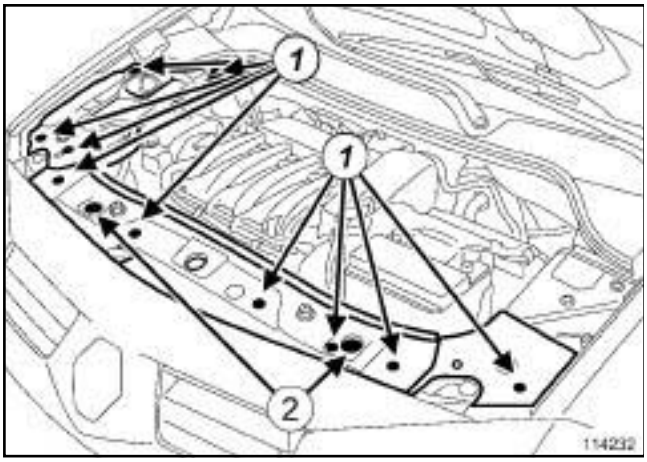

114232

❑ Remove:

- the engine cover mountings (**1**) ,
- the engine covers,
- the cooling radiator mountings (**2**) .

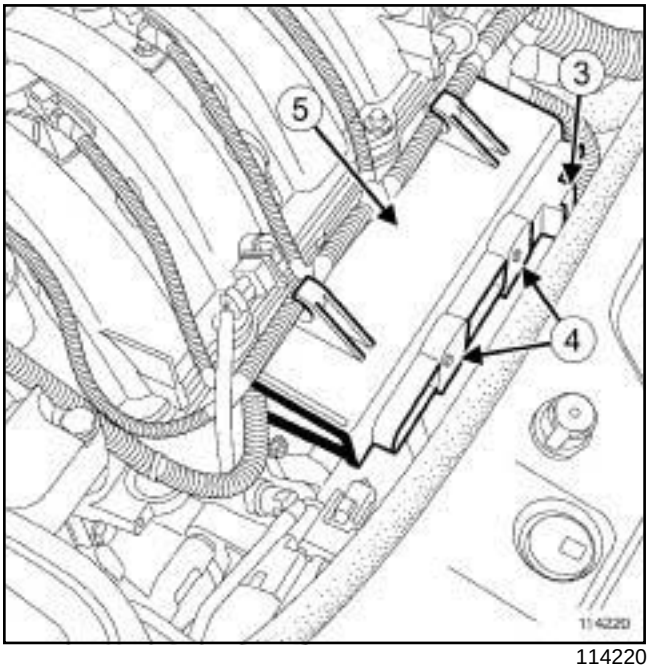

114220

❑ Remove:

- the injector rail wiring harness mounting bolt (**3**) ,
- the mounting nuts (**4**) from the injector rail protector (**5**) ,
- the injector rail protector (**5**) .

Note:
Take care not to damage the radiator when removing the protector (**5**) .

B84 or C84, and K4M, and 764 or 788

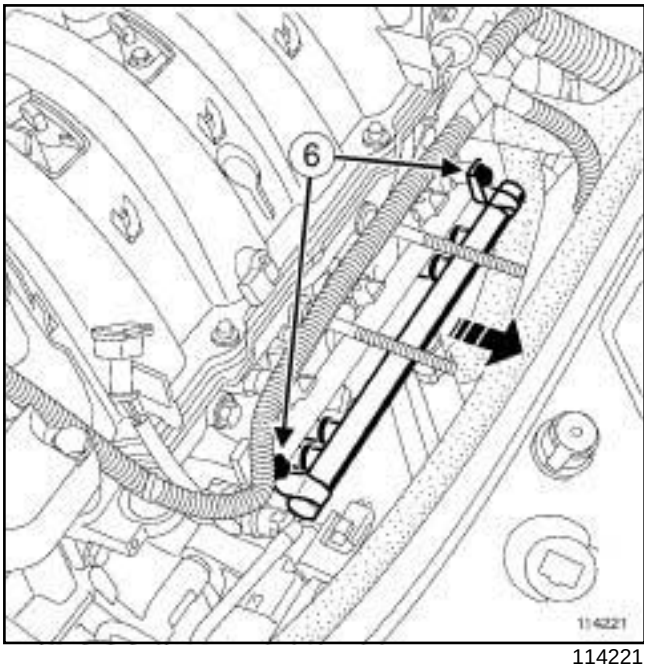

114221

❑ Remove the mounting nuts (**6**) from the LPG injector rail.

❑ Move the LPG injection rail forwards.

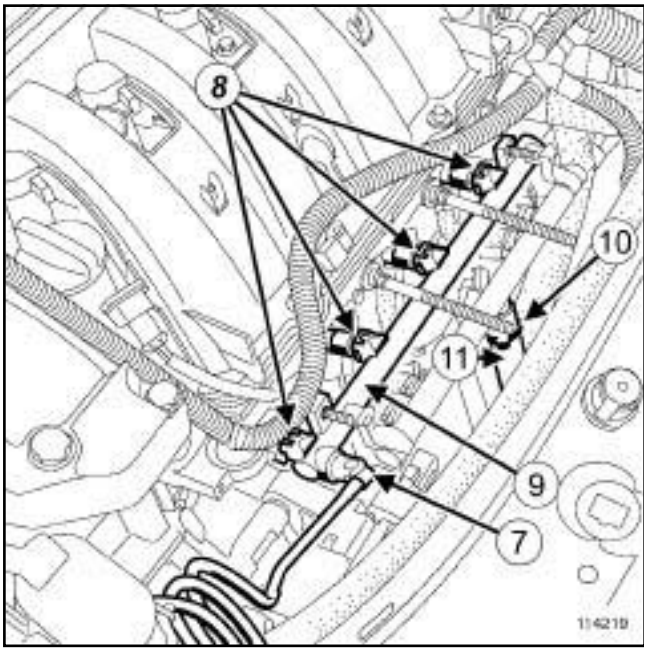

114219

❑ Disconnect the petrol inlet union (**7**) on the petrol injector rail.

❑ Disconnect the petrol injector connectors (**8**) .

❑ Remove the petrol injector rail (**9**) .

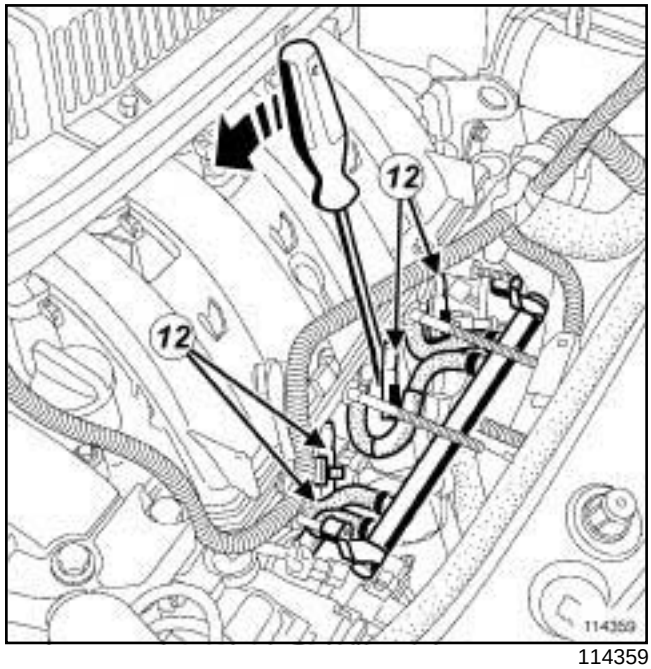

114359

❑ Disconnect the LPG injector connectors (**12**) .

❑ Remove the LPG injectors (**12**) using a flat-blade screwdriver inserted between the LPG injectors and the cylinder head to lever them.

WARNING

The hoses connected on the LPG injection rail and the LPG injectors are marked at each end. These marks help you to correctly position the different components together during refitting.

Before removing a part, note its position in relation to the mark on the hose.

❑ Remove the gas hose clip ***(10)*** between the expansion valve unit and the LPG injector rail.

❑ Disconnect the gas hose ***(11)*** between the expansion valve unit and the LPG injector rail.

❑ Remove the LPG injector rail with the injectors.

❑ Remove the LPG injector hose clips on the LPG injector rail.

❑ Remove the LPG injector rail.

REFITTING

❑ Connect the gas hose between the expansion valve unit and the LPG injector rail.

❑ Always replace the LPG injector hose clips on the LPG injector rail.

❑ Refit the LPG injector hose clips on the LPG injector rail.

B84 or C84, and K4M, and 764 or 788

- ❑ Always replace the gas hose clip ***(10)*** between the expansion valve unit and the LPG injector rail.
- ❑ Refit the gas hose clip between the expansion valve unit and the LPG injector rail.
- ❑ Lubricate the O-ring and the LPG injector ring with engine oil.
- ❑ Refit:
  - the LPG injectors,
  - the LPG injection rail.
- ❑ Connect the LPG injector connectors.
- ❑ Refit the petrol injection rail.
- ❑ Torque tighten the **LPG and petrol injector rail nuts (10 Nm)**.
- ❑ Connect:
  - the fuel injector connectors,
  - the fuel inlet union on the petrol injection rail.
- ❑ Refit the injector rail protector.
- ❑ Torque tighten:
  - the **injector rail protector nuts (21 Nm)**,
  - the **injector rail wiring harness bolt (10 Nm)**

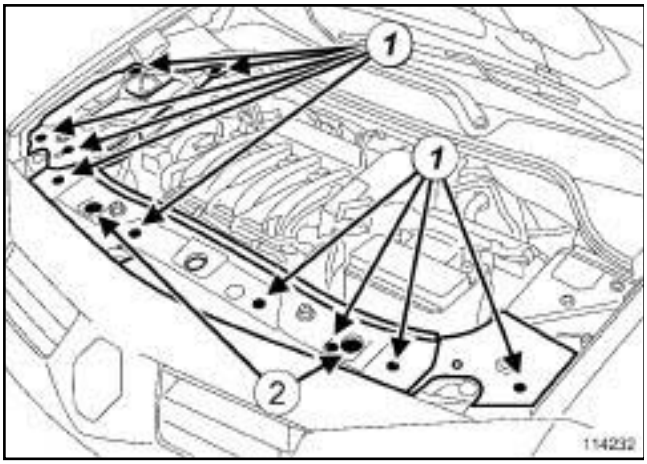

114232

- ❑ Refit:
  - the cooling radiator mountings (**2**) ,
  - the engine covers,
  - the engine cover mountings (**1**) .
- ❑ Connect the battery (see **Battery : Removal - Refitting**) (MR 364, 80A, Battery).
- ❑ Use leak detector to check the sealing on all of the refitted unions containing gas (see **Vehicle: Parts and ingredients for the repairwork**) (MR 364, 04B, Consumables-Product):
  - start the engine, and operate it in "gas" mode,
  - apply leak detector to the unions and check that there are no leaks,
  - wait for 5 minutes,
  - check that there are no leaks on the unions.
- ❑ Check the LPG injectors (see **LPG injector: Check**) .

B84 or C84, and K4M, and 764 or 788

REMOVAL

❑ It is essential to read the repair precautions (see **17C**, **LPG injection**, **LPG injection: Precautions for repair**, page **17C-1**) .

❑ Disconnect the battery (see **Battery: Removal - Refitting**) (MR 364, 80A, Battery).

❑ Remove the LPG injector rail (see **17C**, **LPG injection**, **LPG injection rail: Removal - Refitting**, page **17C-20**) .

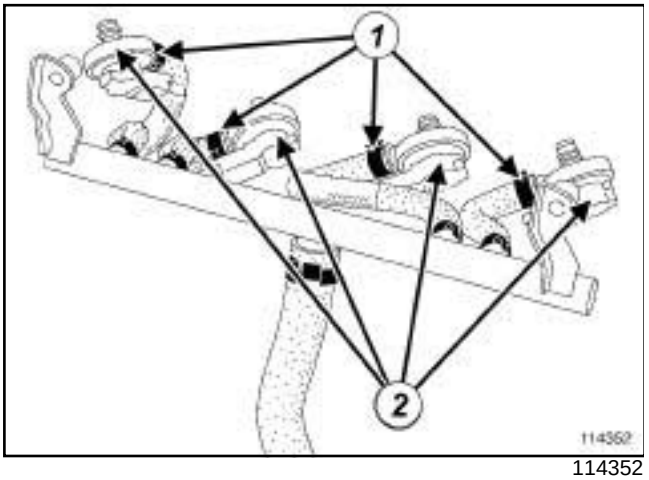

114352

❑ Remove:

- the LPG injector hose clips (**1**) ,
- the LPG injectors (**2**) .

WARNING
The hoses connected on the LPG injection rail and the LPG injectors are marked at each end. These marks help you to correctly position the different components together during refitting.

Before removing a part, note its position in relation to the mark on the hose.

REFITTING

❑ Always replace the LPG injector clips and hoses.

❑ Refit:

- the LPG injectors,
- the LPG injector hose clips.

❑ Refit the LPG injector rail (see **17C**, **LPG injection**, **LPG injection rail: Removal - Refitting**, page **17C-20**) .

❑ Connect the battery (see **Battery : Removal - Refitting**) (MR 364, 80A, Battery).

❑ Use leak detector to check the sealing on all of the refitted unions containing gas (see **Vehicle: Parts and ingredients for the repairwork**) (MR 364, 04B, Consumables-Product):

- start the engine, and operate it in "gas" mode,
- apply leak detector to the unions and check that there are no leaks,
- wait for 5 minutes,
- check that there are no leaks on the unions.

❑ Check the LPG injectors (see **LPG injector: Check**) .

B84 or C84, and K4M, and 764 or 788

Tightening torques ▽	
LPG computer mounting nut	**8 Nm**

REMOVAL

❑ Disconnect the battery (see **Battery: Removal - Refitting**) (MR 364, 80A, Battery).

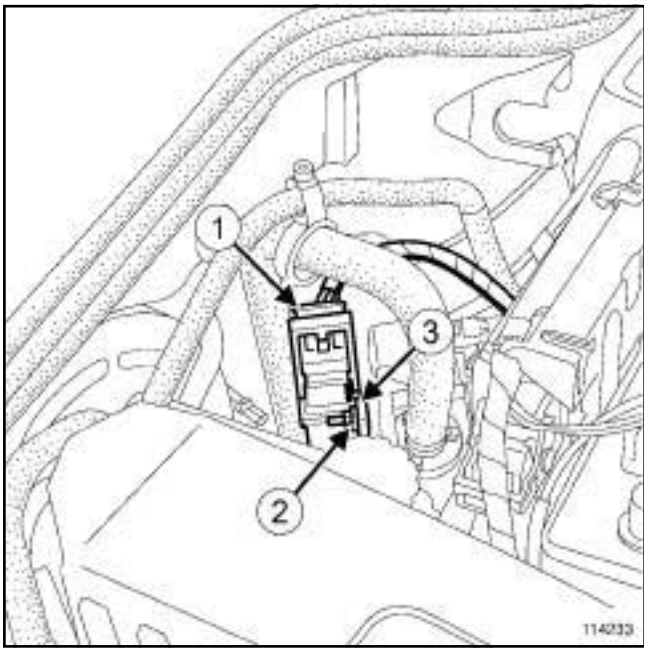

114233

❑ Disconnect the connector (**1**) from the **LPG** computer.

❑ Remove the mounting nut (**2**) from the **LPG** computer.

❑ Remove the **LPG** computer ***(3)*** .

REFITTING

❑ Refit the **LPG** computer.

❑ Torque tighten the **LPG computer mounting nut (8 Nm)**

❑ Connect the **LPG** computer connector.

❑ Reconnect the battery (see **Battery : Removal - Refitting**) (MR 364, 80A, Battery).

CONSUMABLES

Use **GLACEOL RX (TYPE D)** coolant.

Note:

Ready-to-use coolant or antifreeze must be diluted with distilled water in accordance with the guidelines marked on the container.

IMPORTANT

The circuits are designed to be pressurised, so be careful at high temperatures (risk of serious burns).

Do not remove the cap from the expansion bottle while the engine is hot.

Take care when carrying out a repair under the bonnet, as the radiator fan(s) may start to operate without warning.

Do not open the bleed screw(s) with the engine running.

Only use **GLACEOL RX (TYPE D)** coolant.

WARNING

The coolant helps to keep the engine running properly (heat exchange).

The system does not operate using pure water.

WARNING

Drain with the engine warm.

Flushing and refilling should be carried out with a warm or cold engine.

Never flush a hot engine (risk of serious thermal shock).

WARNING

If the coolant is leaking from the expansion bottle cap, replace the valve.

WARNING

When carrying out a repair that requires a complete change, it is essential to flush the circuit with clean water, blast compressed air through the circuit to drive out the water, fill and bleed the circuit and then measure the effective protection.

The criteria to be met are:

- protection down to **-25°C ± 2** for cold and temperate countries,
- protection down to **-40°C ± 2** for "extreme cold" countries.

Note:

Refer to the vehicle's Maintenance Booklet for information on cooling system service intervals.

For any further information, refer to the MR of the vehicle concerned.

When a faulty vehicle arrives, check:

- the condition and tension of the coolant pump drive belt,
- that the fan, the radiator and the radiator grille are not obstructed by an object which may impede the flow of air.

Vehicles in the current range have cooling systems with the following basic specifications:

- hermetically-sealed pressurised circuit (expansion chamber valve),

Note:

Summary of expansion bottle valve ratings.

Expansion bottle valve with:

• a brown circle: **1.2 bar**

• a blue circle: **1.4 bar**

• a yellow marking: **1.4 bar**

• a white marking: **1.6 bar**

• a grey marking: **1.8 bar**

- circuit using type « D » coolant only.

Note:

Ready-to-use coolant or antifreeze must be diluted with distilled water in accordance with the guidelines marked on the container.

Grade and quantity of coolant

Engine	Suffix	Quantity (litres)	Grade
K4J	730	**6**	GLACEOL RX (type D). Only use coolant fluid
	732		
	740		
K4M	760	**6**	
	764		
	766		
	768		
	788		
	812		
	761	**6.5**	
	813		
K9K	722	**5.3**	
	728	**6.5**	
	729	**6.8**	
	732	**7.5**	
	734	**7.8**	
F4R	770	**6**	
	771	**6.5**	
	774	**7**	
	776	**6.5**	
F9Q	800	**7.2**	
	803	**7.9**	
	804	**7.6**	
	808	**7.2**	
M9R	700	**7.5**	
	722	**7.8**	
	724		

Thermostat

Engine	Start of opening (°C)	End of opening (°C)
K4J	**89**	**99 ± 2**
K4M	**89**	**99 ± 2**
K9K	**89**	**99 ± 2**
F9Q	**89**	**99 ± 2**
F4R	**89**	**99 ± 2**
M9R	**89**	**99 ± 2**

Essential special tooling	
Mot. 1700	Fault finding and filling-bleeding cooling system.
Ms. 554-07	Cooling system tester kit (complete). Contains plugs 554-01, 554-04, 554-06

IMPORTANT

When working in the engine compartment, take care as the radiator fan(s) may start up unexpectedly (risk of being cut).

To avoid any risk of serious burns when the engine is hot:

- do not open the expansion bottle cap,

- do not drain the cooling system,

- do not open the bleed screw(s).

Note:

There are two procedures for checking the cooling system:

- the procedure using the **(Mot. 1700)**

- the procedure using the **(Ms. 554-07)**

Expansion bottle cap valve rating:

Expansion bottle cap with ...	Valve rating
... a brown circle	**1.2 bar**
... a yellow marking	**1.4 bar**
... a white marking	**1.6 bar**
... a grey marking	**1.8 bar**

I - CHECKING THE COOLING SYSTEM USING THE TOOL (MOT. 1700)

❑

WARNING

If the coolant is leaking from the expansion bottle cap, replace the valve.

1 - Checking the expansion bottle cap valve

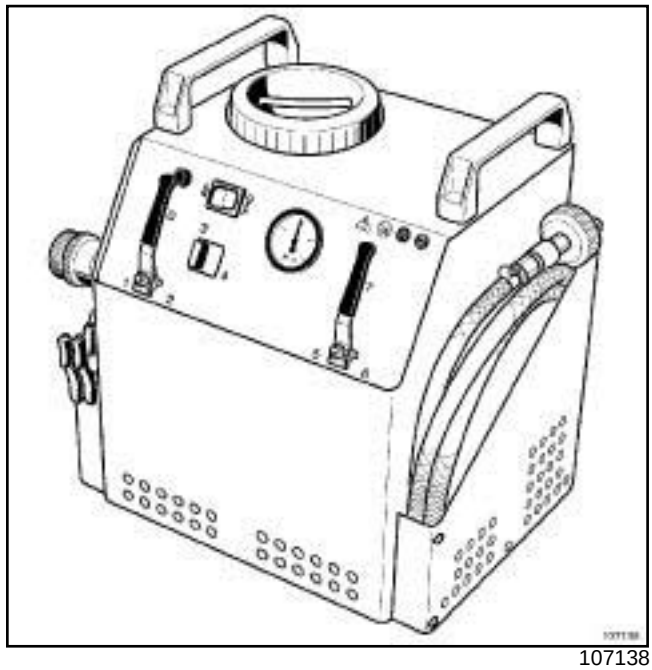

107138

❑ Use the cooling system filling and diagnostic tool **(Mot. 1700)**. Consult the user's manual for this tool (see **Cooling system filling and diagnostic tool: Use**) (Technical Note 3857A, 19A, Cooling).

2 - Checking the sealing of the cooling circuit

❑ Use the cooling system filling and diagnostic tool **(Mot. 1700)**. Consult the user's manual for this tool (see **Cooling system filling and diagnostic tool: Use**) (Technical Note 3857A, 19A, Cooling).

II - CHECKING THE COOLING SYSTEM USING THE TOOL (MS. 554-07)

❑

WARNING

If the coolant is leaking from the expansion bottle cap, replace the valve.

1 - Checking the expansion bottle cap valve

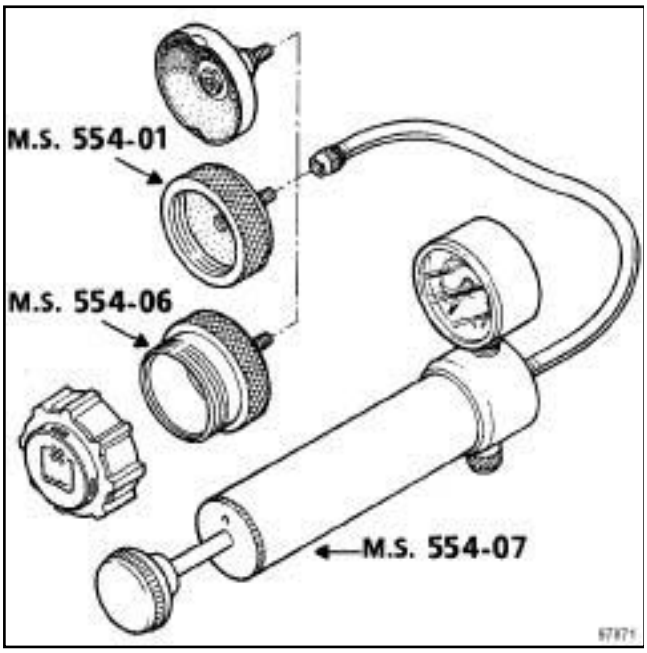

97871

- Fit onto the tester **(Ms. 554-07)**, the adapter **(Ms. 554-06)**.
- Fit the expansion bottle cap to the adapter **(Ms. 554-06)**.

> Note:
>
> The pressure should not drop; if it does, look for the leak.

- Pump with the **(Ms. 554-07)**, the pressure should stabilise at the expansion bottle cap valve rating with a test tolerance of ± **0.1 bar.**

2 - Checking the sealing of the cooling circuit

- Replace the expansion bottle cap with the adapter **(Ms. 554-01)**.
- Connect on the adapter **(Ms. 554-01)** the tool **(Ms. 554-07)**.
- Pump with the **(Ms. 554-07)** to put the cooling circuit under pressure.
- Stop pumping at **0.1 bar** below the valve rating for the expansion bottle cap valve with.

> Note:
>
> The pressure should not drop; if it does, look for the leak.

- Gradually unscrew the union of the **(Ms. 554-07)** to decompress the cooling system then remove the adapter **(Ms. 554-01)** and refit the expansion bottle cap.

B84 or C84, and F4R, and 774

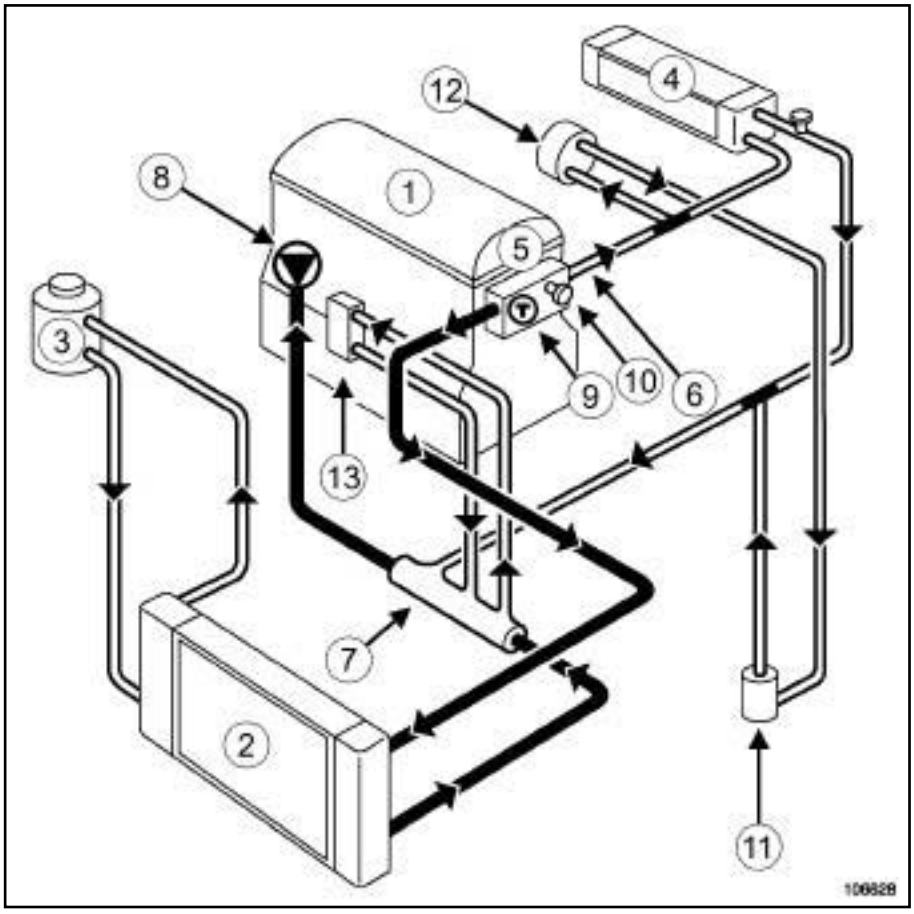

106628

(**1**)	Engine
(**2**)	Cooling radiator
(**3**)	Expansion bottle
(**4**)	Heater radiator
(**5**)	Thermostat mounting
(**6**)	Fit ∅ 9 mm
(**7**)	Fit ∅ 16 mm
(**8**)	Coolant pump
(**9**)	Thermostat
(**10**)	Bleeding
(**11**)	Electric coolant pump
(**12**)	Turbocharger
(**13**)	Water/oil heat exchanger

The expansion bottle valve rating is **1.4 bar**.

B84 or C84 or G84 or S84, and K4J – B84 or C84 or G84 or S84, and K4M

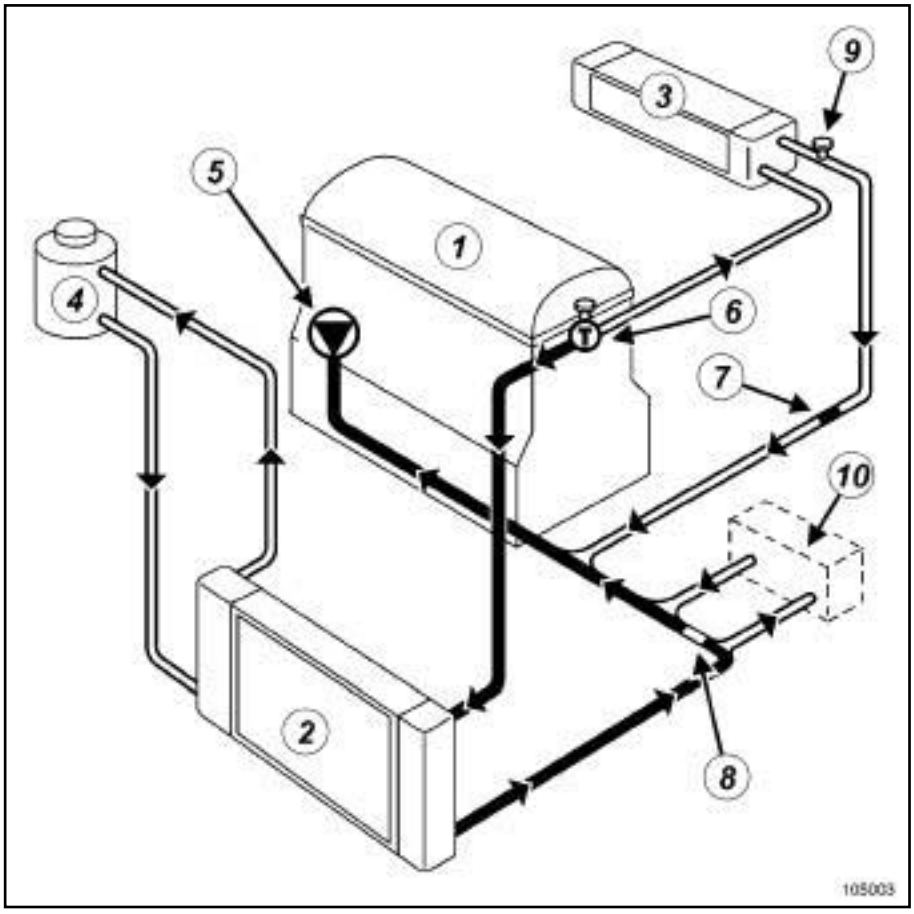

105003

(**1**)	Engine
(**2**)	Cooling radiator
(**3**)	Heater radiator
(**4**)	Expansion bottle
(**5**)	Coolant pump
(**6**)	Thermostat
(**7**)	9 mm restriction
(**8**)	16 mm air valve
(**9**)	Bleed screws
(**10**)	Automatic gearbox coolant-oil intercooler (if fitted to the vehicle)

Note:

The rating of the expansion bottle degassing valve is **1.4 bar**.

B84 or C84 or G84 or S84, and M9R, and 700

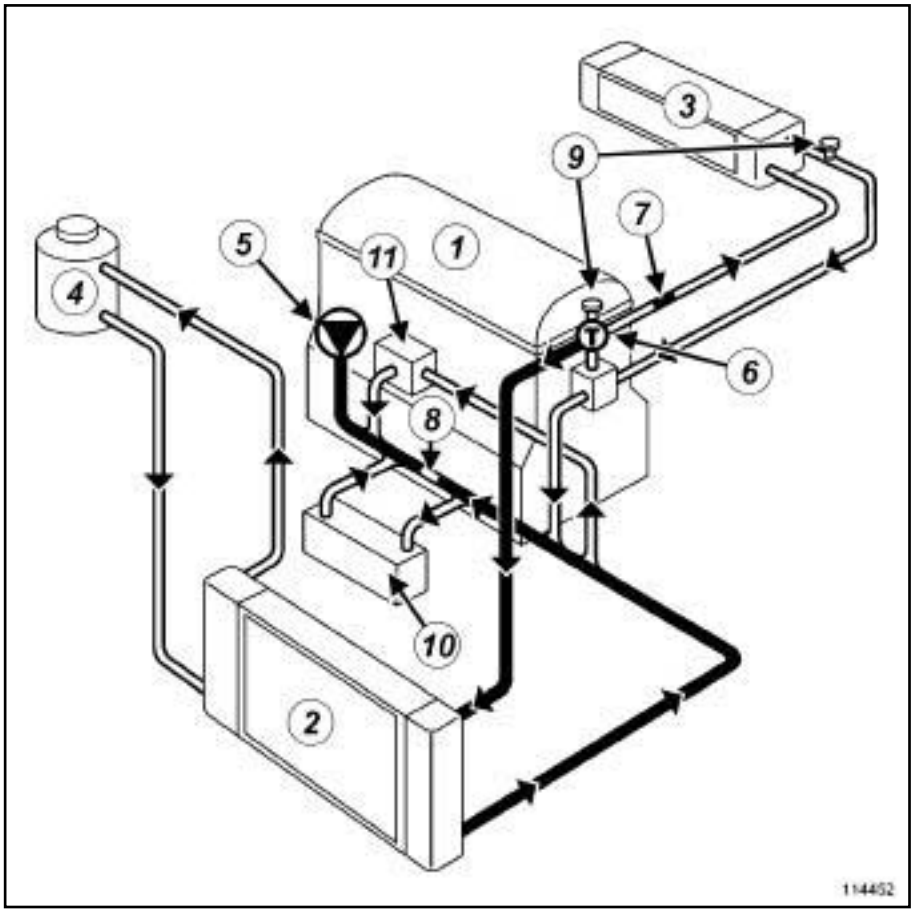

114452

(**1**)	Engine
(**2**)	Cooling radiator
(**3**)	Heater radiator
(**4**)	Expansion bottle
(**5**)	Coolant pump
(**6**)	Thermostat
(**7**)	Choke
(**8**)	Choke
(**9**)	Bleed screws
(**10**)	Coolant-oil heat exchanger
(**11**)	Exhaust gas recirculation solenoid valve

Note:

The rating of the expansion bottle degassing valve is **1.4 bar**.

B84 or C84 or G84 or S84, and F9Q, and 800 or 808

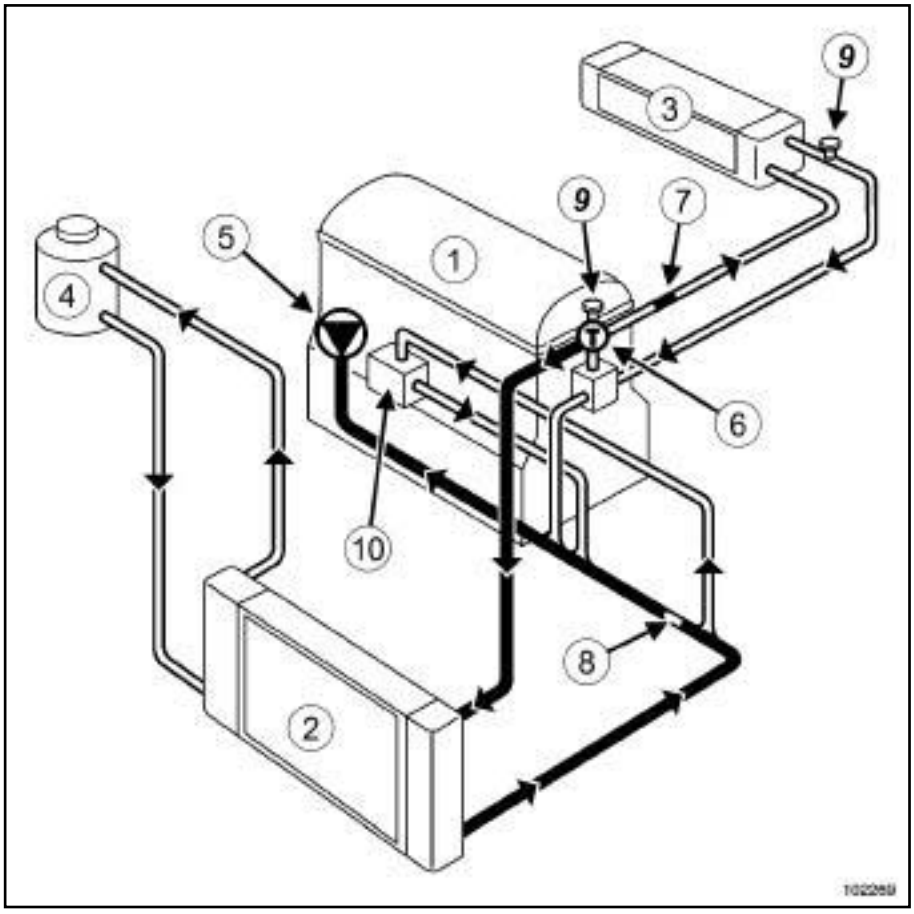

102269

(**1**)	Engine
(**2**)	Cooling radiator
(**3**)	Heater radiator
(**4**)	Expansion bottle
(**5**)	Coolant pump
(**6**)	Thermostat
(**7**)	8 mm restriction
(**8**)	9 mm restriction
(**9**)	Bleed screws
(**10**)	Oil - coolant intercooler

Note:

The rating of the expansion bottle degassing valve is **1.4 bar**.

Engine cooling circuit: Operating diagram

B84 or C84 or G84 or S84, and F9Q, and 804 or 816 or 818

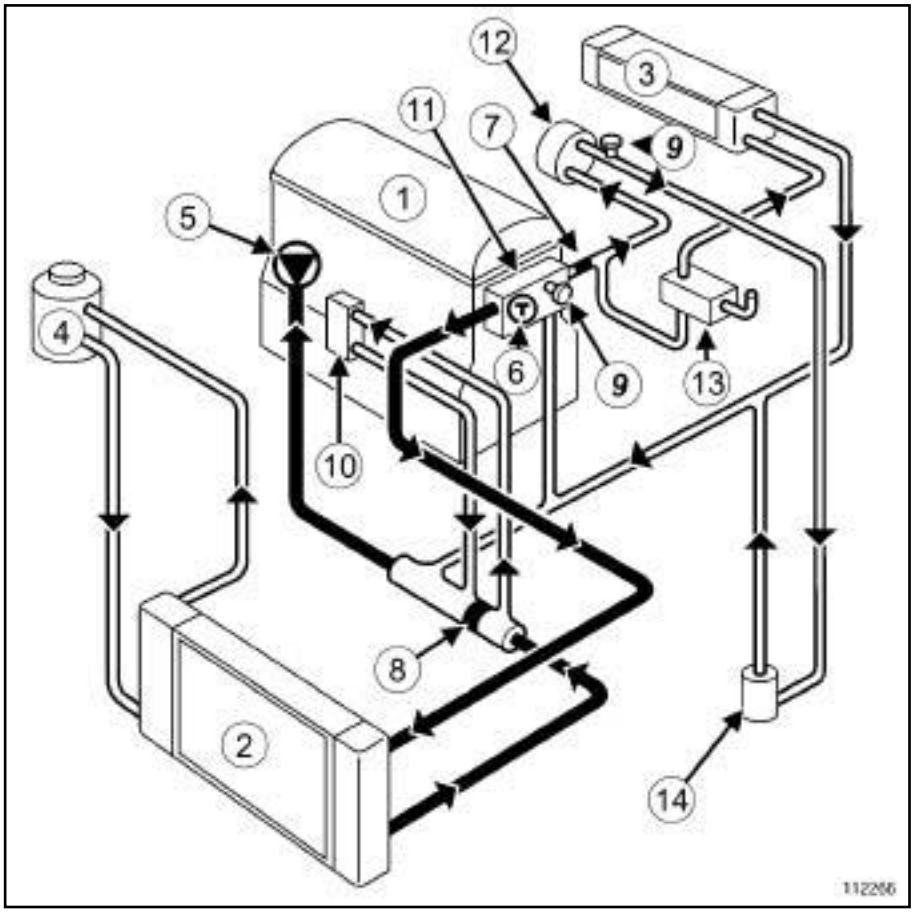

112266

(**1**)	Engine
(**2**)	Cooling radiator
(**3**)	Heater radiator
(**4**)	Expansion bottle
(**5**)	Coolant pump
(**6**)	Thermostat
(**7**)	8 mm restriction
(**8**)	16 mm restriction
(**9**)	Bleed screws
(**10**)	Oil - coolant intercooler
(**11**)	Cylinder head water chamber
(**12**)	Turbocharger
(**13**)	Intercooler
(**14**)	Electric coolant pump

Note:

The expansion bottle valve rating is **1.4 bar**.

B84 or C84 or G84 or S84, and F9Q, and 803

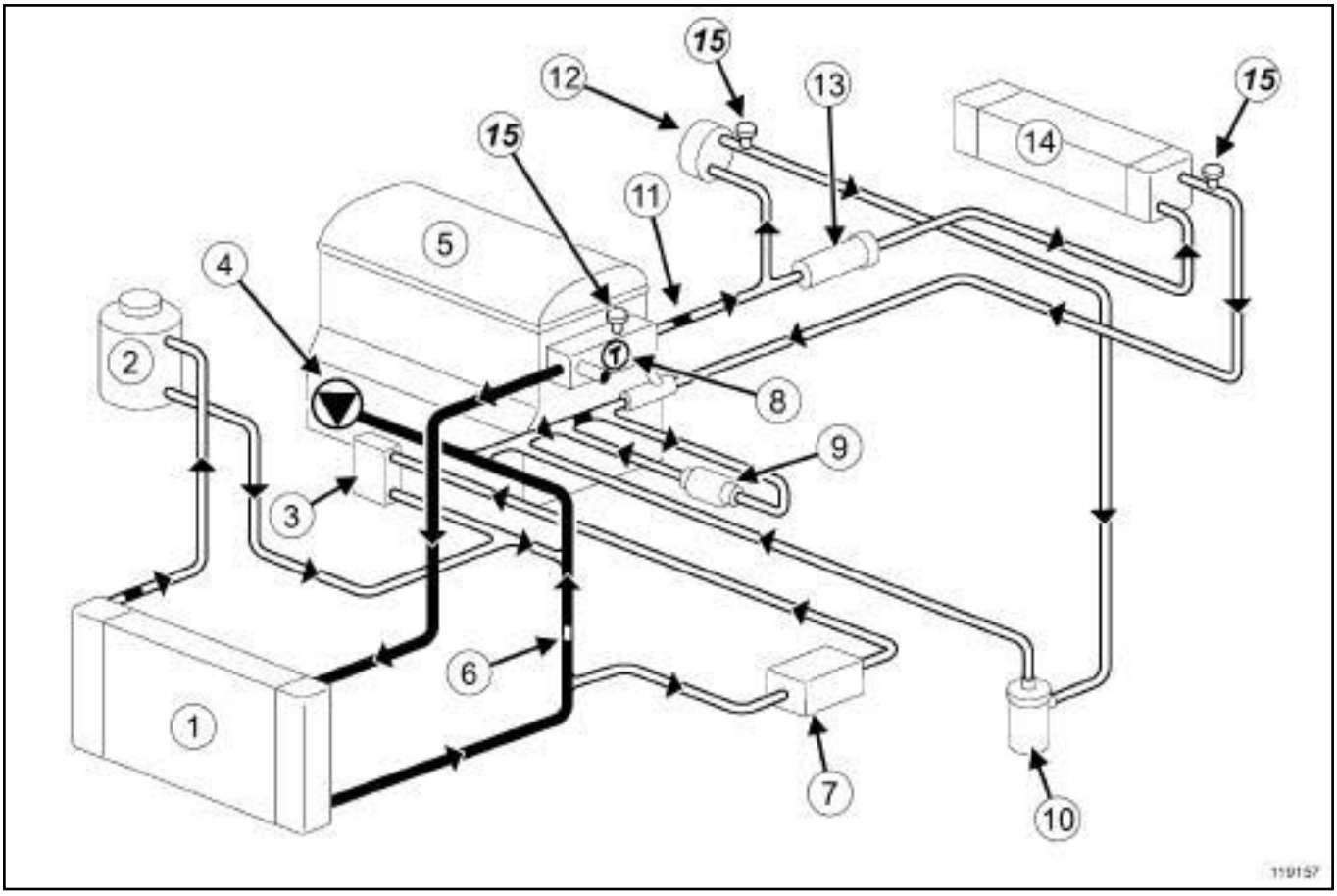

119157

(**1**)	Cooling radiator
(**2**)	Expansion bottle
(**3**)	Oil - coolant intercooler
(**4**)	Coolant pump
(**5**)	Engine
(**6**)	Choke
(**7**)	Coolant/oil heat exchanger for automatic transmission
(**8**)	Coolant outlet unit
(**9**)	Heating element
(**10**)	Coolant pump
(**11**)	Choke
(**12**)	Turbocharger
(**13**)	Intercooler
(**14**)	Heater radiator
(**15**)	Bleed screws

K9K, and 734

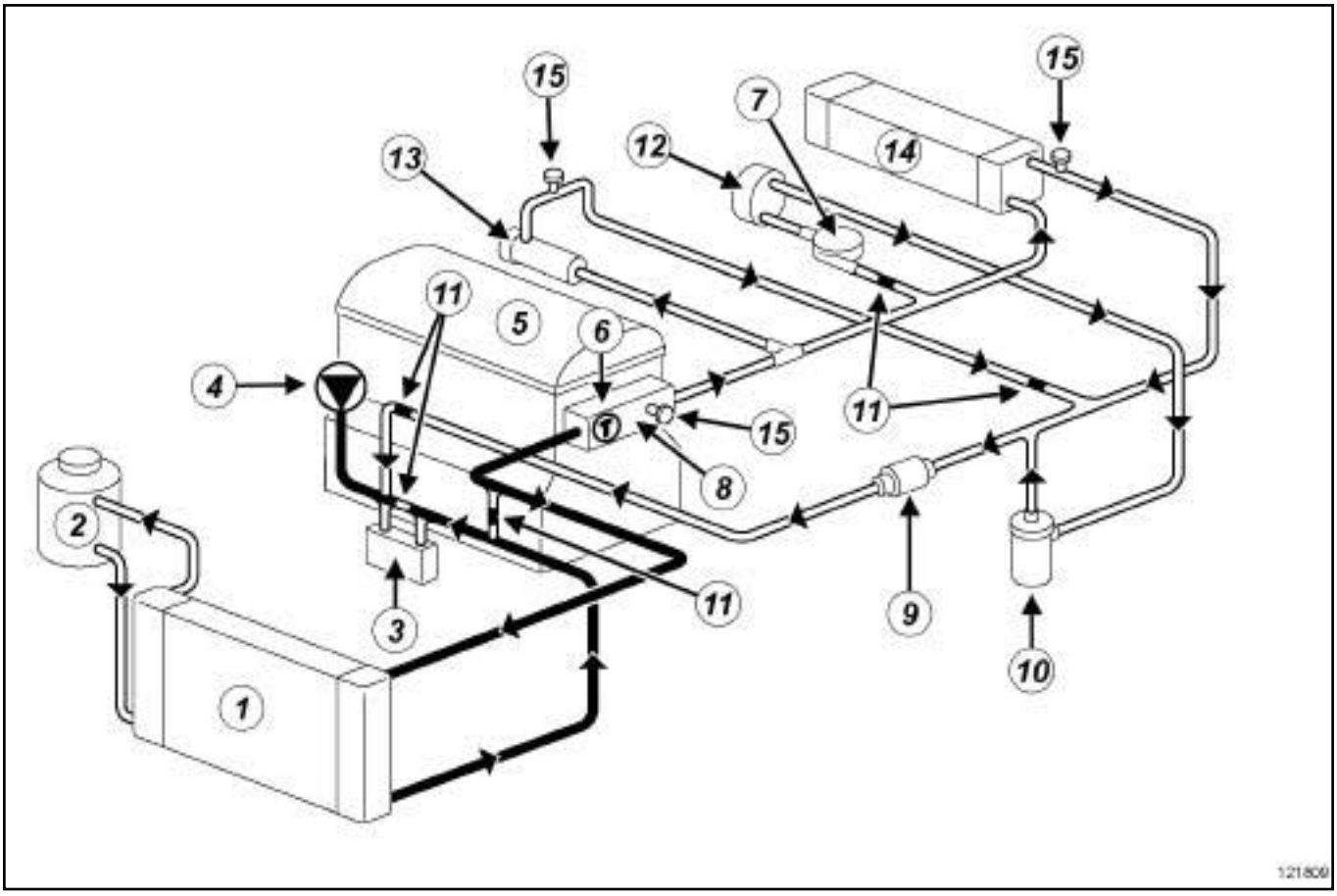

121809

(**1**)	Cooling radiator
(**2**)	Expansion bottle
(**3**)	Coolant-oil heat exchanger
(**4**)	Coolant pump
(**5**)	Engine
(**6**)	Thermostat
(**7**)	Diesel fuel injector cooler on the catalytic pre-converter
(**8**)	Coolant outlet unit
(**9**)	Heating elements
(**10**)	Electric coolant pump
(**11**)	Choke
(**12**)	Turbocharger
(**13**)	Intercooler
(**14**)	Heater matrix
(**15**)	Bleed screws

B84 or C84 or E84 or K84, and M9R, and 722 or 724

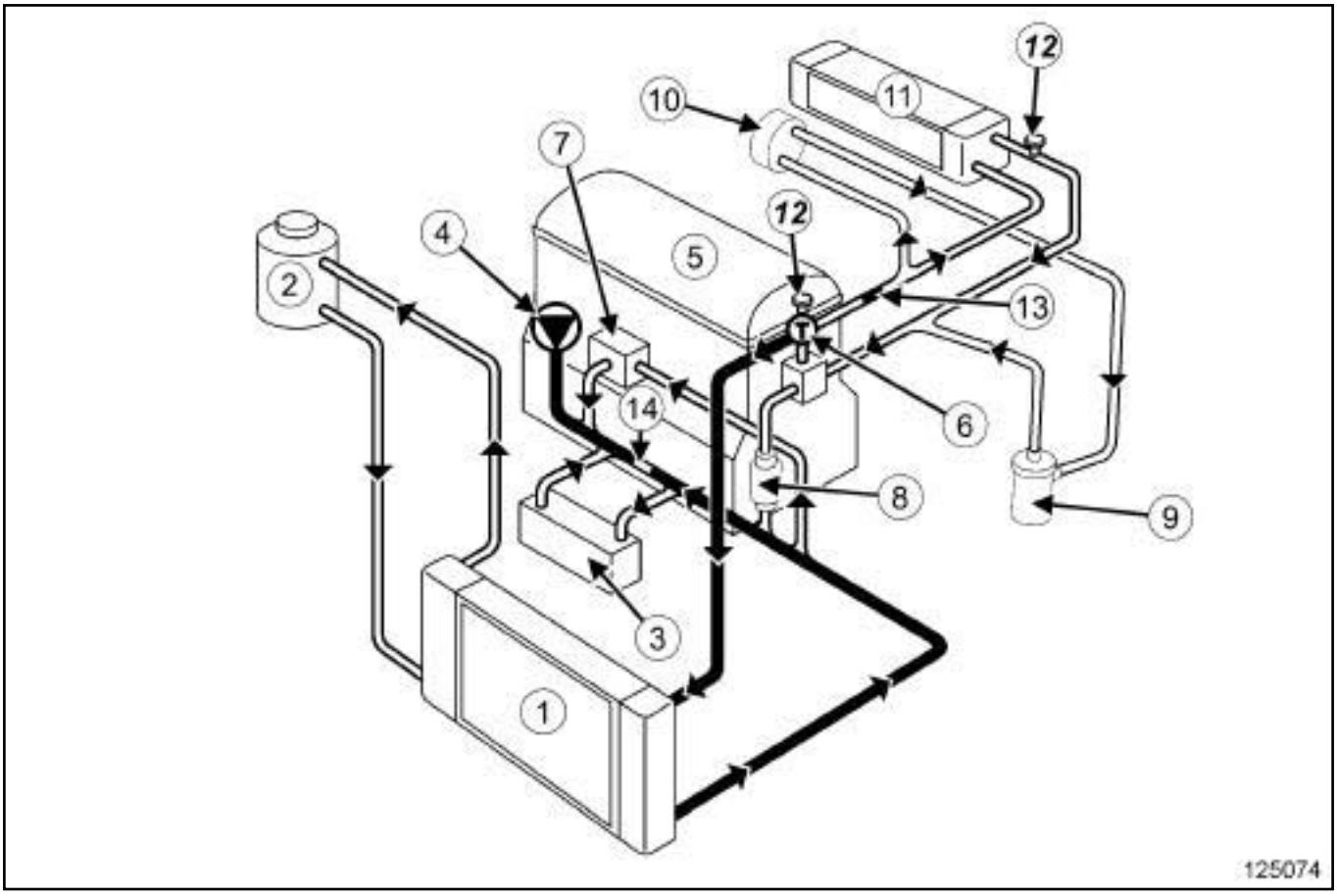

125074

(**1**)	Cooling radiator
(**2**)	Expansion bottle
(**3**)	Water-oil heat exchanger
(**4**)	Water pump
(**5**)	Engine
(**6**)	Thermostat
(**7**)	Exhaust gas recirculation solenoid valve
(**8**)	Heating elements
(**9**)	Electric coolant pump
(**10**)	Turbocharger
(**11**)	Heater matrix
(**12**)	Bleed screws
(**13**)	Choke
(**14**)	Choke

F4R or F9Q or K4J or K4M or K9K

Essential special tooling	
Mot. 1448	Long nose pliers for hose clips.
Mot. 1202-01	Pliers for large hose clips.
Mot. 1202-02	Pliers for small hose clips.
Car. 1363	Set of trim removal levers.
Mot. 1700	Fault finding and filling-bleeding cooling system.
Ms. 554-07	Cooling system tester kit (complete). Contains plugs 554-01, 554-04, 554-06

Essential equipment
compressed air nozzle

IMPORTANT

When working in the engine compartment, take care as the radiator fan(s) may start up unexpectedly (risk of being cut).

To avoid any risk of serious burns when the engine is hot:

- do not open the expansion bottle cap,
- do not drain the cooling system,
- do not open the bleed screw(s).

WARNING

Before the operation, protect the electrical accessories to prevent any risk of short circuiting and protect the belts to avoid damaging them.

I - OIL SERVICE

❑ Position the vehicle on a two-post lift (see **Vehicle: Towing and lifting**) (MR 364, 02A, Lifting equipment).

❑ Remove:

- the expansion bottle cap,
- the engine undertray bolts,
- the engine undertray.

❑ Place the coolant recovery tray under the vehicle.

❑ Remove the cooling radiator bottom hose clip using the **(Mot. 1448)** or **(Mot. 1202-01)** or **(Mot. 1202-02)**.

❑ Open the cooling system by disconnecting the cooling radiator bottom hose using the **(Car. 1363)**.

❑ Blow air through the cooling system via the expansion bottle opening using a **compressed air nozzle** to drain as much coolant as possible.

II - CLEANING

❑ Fill the cooling system with water through the expansion bottle.

❑ Let the water run until the water collected from the cooling radiator bottom hose becomes clear.

❑ Open the top cooling hose clip using the **(Mot. 1448)** or **(Mot. 1202-01)** or **(Mot. 1202-02)**.

❑ Disconnect the top cooling hose.

❑ Blow air through the cooling system via the expansion bottle opening using a **compressed air nozzle** to drain as much coolant as possible.

❑ Connect:

- the bottom cooling hose,
- the top cooling hose.

❑ Refit:

- the cooling radiator bottom hose clip, using the **(Mot. 1448)** or the **(Mot. 1202-01)** or the **(Mot. 1202-02)**,
- the top cooling hose clip using the **(Mot. 1448)** or **(Mot. 1202-01)** or **(Mot. 1202-02)**.

III - FILLING

❑

Note:

There are two procedures for filling the cooling system:

- the procedure using the **(Mot. 1700)**,recommended by Renault, which saves a considerable amount of time as the cooling system bleed screws do not need to be opened,
- the procedure without a special tool.

1 - Filling procedure with the tool (Mot. 1700)

❑ Fill the cooling system with engine coolant recommended by the manufacturer (see **19A**, **Cooling**, **Engine cooling: Parts and consumables for the repair work**, page **19A-1**) using the **(Mot. 1700)**.

F4R or F9Q or K4J or K4M or K9K

Refer to the method of use for this tool (see **Engine cooling: Precautions for repair)** (Technical Note 3857A, 19A, Cooling).

❑ Refit the expansion bottle cap.

2 - Filling method without special tools

❑

> **WARNING**
> It is essential to open all of the bleed screws to remove as much as air as possible in the cooling system, Failure to perform this procedure may prevent the cooling system from filling properly and may damage the engine.

❑ Open the bleed screws (see **19A**, **Cooling**, **Engine cooling circuit: Operating diagram**, page **19A-7**) .

❑ Fill the cooling system through the expansion bottle until the engine coolant recommended by the manufacturer overflows (see **19A**, **Cooling**, **Engine cooling: Parts and consumables for the repair work**, page **19A-1**) .

❑ Close all the bleed screws as soon as the coolant starts to flow in a continuous stream.

❑ Pressurise the cooling system using the **(Ms. 554-07)** (see **19A**, **Cooling**, **Engine cooling circuit: check**, page **19A-5**) .

❑ Refit the expansion bottle cap.

❑ Clean any surfaces soiled by the coolant.

IV - BLEEDING

❑

> **WARNING**
> Do not open the bleed screw whilst the engine is running; this would damage the engine.

❑ Start the engine.

❑ Run the engine until the engine cooling fan is triggered three times (time required for automatic degassing).

❑ Check that the heating is operating correctly.

❑ Allow the engine to cool until the coolant temperature is less than **50˚C**.

❑ Remove the expansion bottle cap.

❑ Make sure the coolant fluid level is at the « Maximum » mark.

❑ Refit the expansion bottle cap.

V - FINAL OPERATION.

❑ Remove the coolant recovery tray.

❑ Refit:

- the engine undertray,
- the engine undertray bolts.

B84 or C84 or E84 or K84 or L84, and M9R

Essential special tooling	
Mot. 1448	Long nose pliers for hose clips.
Mot. 1700	Fault finding and filling-bleeding cooling system.
Ms. 554-07	Cooling system tester kit (complete). Contains plugs 554-01, 554-04, 554-06

Essential equipment
compressed air nozzle

Tightening torques ▽	
air filter box air outlet pipe clips	**5.5 N.m**

IMPORTANT

When working in the engine compartment, take care as the radiator fan(s) may start up unexpectedly (risk of being cut).

To avoid any risk of serious burns when the engine is hot:

- do not open the expansion bottle cap,
- do not drain the cooling system,
- do not open the bleed screw(s).

WARNING

Before the operation, protect the electrical accessories to prevent any risk of short circuiting and protect the belts to avoid damaging them.

I - OIL SERVICE

❑ Position the vehicle on a two-post lift (see **Vehicle: Towing and lifting**) (MR 364, 02A, Lifting equipment).

❑ Remove:

- the expansion bottle cap,
- the engine undertray.

❑ Place the coolant recovery tray under the vehicle.

❑ Disconnect the bottom hose from the radiator using the tool **(Mot. 1448)**.

❑ Blow air through the cooling system via the expansion bottle opening using a **compressed air nozzle** to drain as much coolant as possible.

II - CLEANING

❑ Fill the cooling system with water through the expansion bottle.

❑ Let the water run until the water collected from the cooling radiator bottom hose becomes clear.

❑ Disconnect the radiator top hose using the tool **(Mot. 1448)**.

❑ Blow air through the cooling system via the expansion bottle opening using a **compressed air nozzle** to drain as much coolant as possible.

❑ Connect:

- the bottom hose,
- the top hose.

III - FILLING

❑

Note:

There are two procedures for filling the cooling system:

- the procedure using the **(Mot. 1700)**,recommended by Renault, which saves a considerable amount of time as the cooling system bleed screws do not need to be opened,
- the procedure without a special tool.

1 - Filling procedure with the tool (Mot. 1700)

❑ Fill the cooling system with engine coolant recommended by the manufacturer (see **19A**, **Cooling**, **Engine cooling: Parts and consumables for the repair work**, page **19A-1**) using the **(Mot. 1700)**. Consult the procedure for using this tool (see **Engine cooling: Precautions for repair)** (Technical Note 3857A, 19A, Cooling).

❑ Refit the expansion bottle cap.

B84 or C84 or E84 or K84 or L84, and M9R

2 - Filling method without special tools

❑

> **WARNING**
> It is essential to open all of the bleed screws to remove as much as air as possible in the cooling system. Failure to perform this procedure may prevent the cooling system from filling properly and may damage the engine.

J84, and M9R

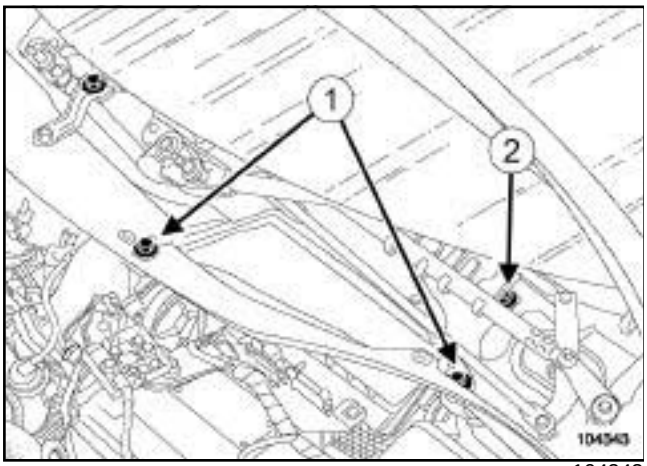

104343

❑ Remove:

- the air filter access panel bolts (**1**) ,
- the air filter access panel,
- the scuttle panel partition bolt (**2**) .

J84, and M9R

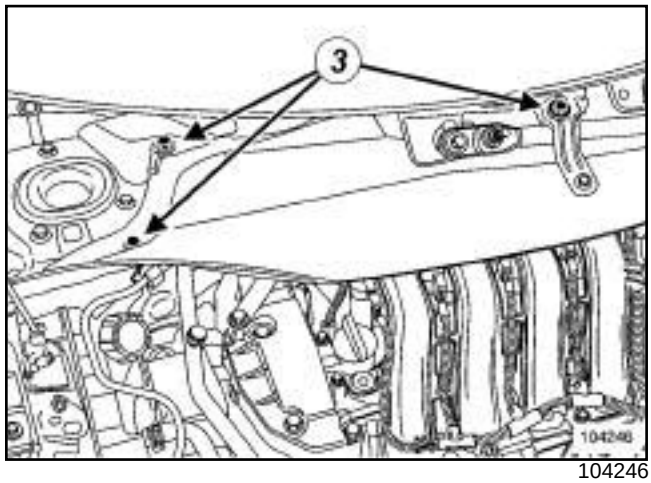

104246

❑ Remove:

- the scuttle panel partition bolts (**3**) ,
- the scuttle panel partition.

❑ Remove:

- the battery (see **Battery: Removal - Refitting**) (MR 364, 80A, Battery),
- the battery tray (see **Battery tray: Removal - Refitting**) (MR 364, 80A, Battery),
- the front wiper arms (see **Windscreen wiper arm: Removal - Refitting**) (MR 364, 85A, Wiping - Washing),
- the scuttle panel grille (see **Scuttle panel grille: Removal - Refitting**) (MR 365, 56A, Exterior equipment),
- the acoustic protection clips on the scuttle panel partition,
- the acoustic protection.

B84 or C84 or E84 or K84 or L84, and M9R

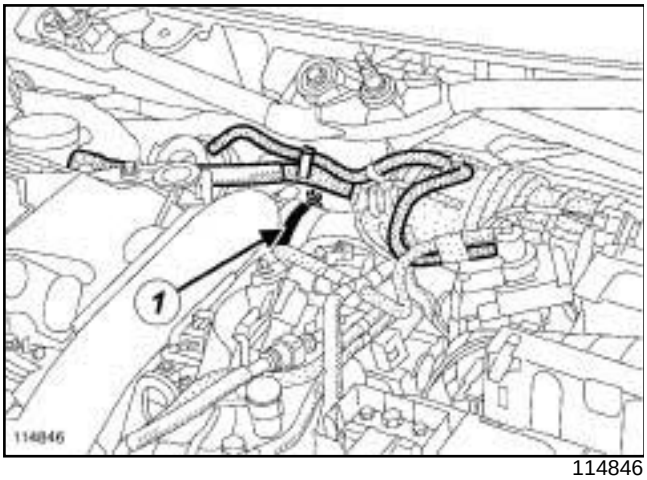

114846

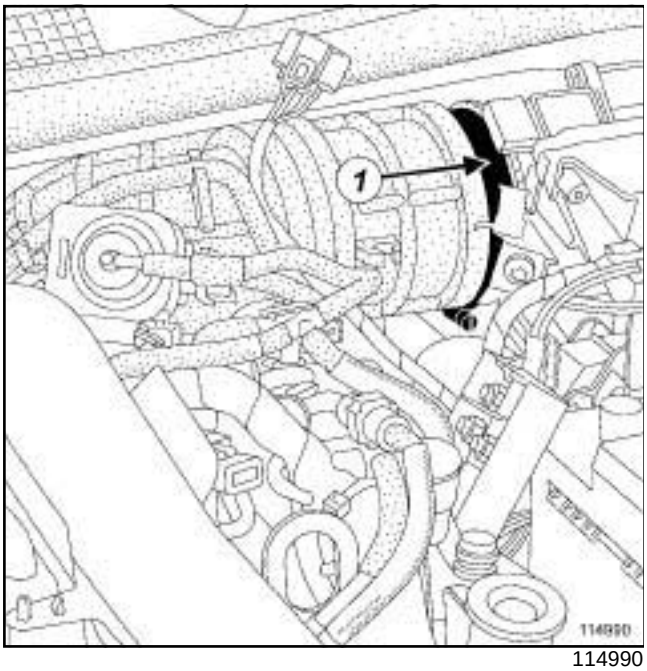

114990

❑ Undo the air filter unit air outlet pipe clips (**1**) .

❑ Remove the air filter box air outlet pipe.

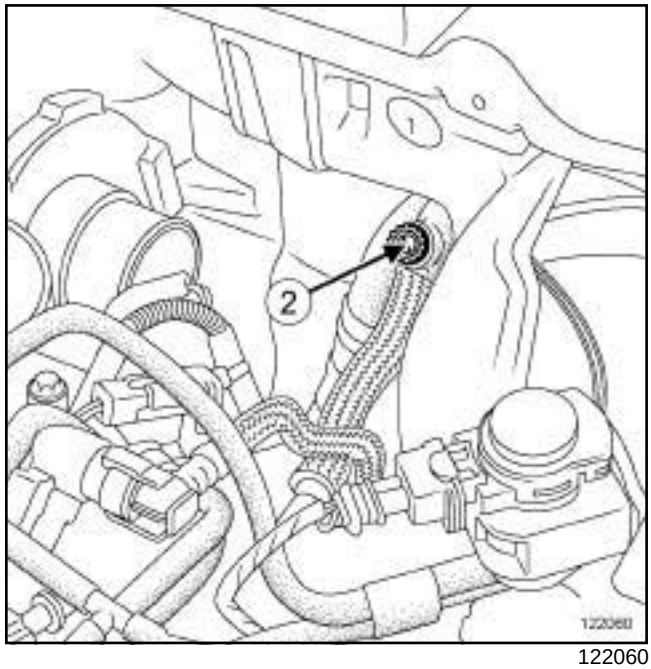

122060

❑ Open the air bleed screw (**2**) of the heater radiator.

B84 or C84 or E84 or K84 or L84, and M9R

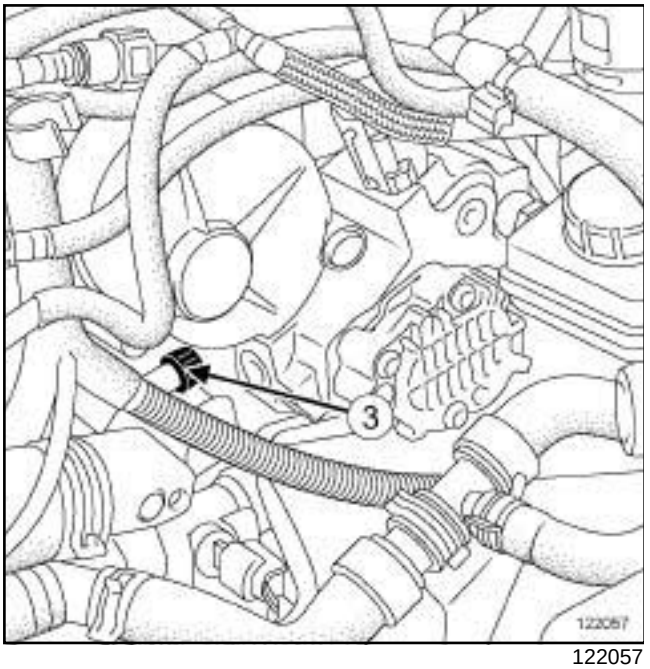

122057

❑ Open the air bleed screw (**3**) of the engine water chamber.

❑ Fill the cooling system through the expansion bottle until the engine coolant recommended by the manufacturer overflows (see **19A**, **Cooling**, **Engine cooling: Parts and consumables for the repair work**, page **19A-1**) .

❑ Close all of the air bleed screws as soon as coolant starts to flow in a continuous stream.

❑ Refit the air filter box air outlet pipe.

❑ Tighten the **air filter box air outlet pipe clips (5.5 N.m)**.

❑ Refit:

- the acoustic protection,
- the acoustic protection clips on the scuttle panel partition,
- the scuttle panel grille (see **Scuttle panel grille: Removal - Refitting**) (MR 365, 56A, Exterior equipment),
- the front wiper arms (see **Windscreen wiper arm: Removal - Refitting**) (MR 364, 85A, Wiping - Washing),
- the battery tray (see **Battery tray: Removal - Refitting**) (MR 364, 80A, Battery),
- the battery (see **Battery: Removal - Refitting**) (MR 364, 80A, Battery).

❑ Pressurise the cooling system using the **(Ms. 554-07)** (see **19A**, **Cooling**, **Engine cooling circuit: check**, page **19A-5**) .

❑ Refit the expansion bottle cap.

❑ Clean any surfaces soiled by the coolant.

J84, and M9R

❑ Refit:

- the scuttle panel partition,
- the air filter access panel.

IV - BLEEDING

❑

Note:

Because of the layout of the cooling system, it is more difficult to prime the coolant pump on this engine. It is therefore essential to carefully follow the different steps below.

WARNING

Do not open the bleed screw whilst the engine is running; this would damage the engine.

❑ Start the engine and check that the air conditioning system is off.

❑ With the air conditioning off, let the engine run at **1500 rpm** until the engine cooling fan is triggered twice (time required for automatic degassing).

Note:

To check that the coolant pump has been correctly primed:

- after **5 min** under **1500 rpm**, check that the temperature indicated on the instrument panel begins to increase,
- each time the engine cooling fan is triggered, check that there is a return flow in the expansion bottle.

❑ Check that the heating is operating correctly.

❑ Allow the engine to cool until the coolant temperature is less than **50°C**.

❑ Remove the expansion bottle cap.

❑ Make sure the coolant fluid level is at the « Maximum » mark.

❑ Refit the expansion bottle cap.

B84 or C84 or E84 or K84 or L84, and M9R

V - FINAL OPERATION

❏ Remove the coolant recovery tray.

❏ Refit:

- the engine undertray,
- the engine undertray bolts.

F4R or F9Q or K4J or K4M or K9K

Essential special tooling	
Car. 1363	Set of trim removal levers.
Mot. 1448	Long nose pliers for hose clips.

Tightening torques ▽	
intercooler pipe clip	**6 N.m**
bolts of the front cross member	**44 N.m**
bolts of the upper cross member	**21 N.m**

F4R, and 776 – F9Q – K9K

❏ Procedure for removing the air inlet duct on the intercooler:

- risk of leaks and of coming loose if this procedure is not adhered to,
- detach the pipe using the **(Car. 1363)**,
- do not use a degreaser, brake cleaner or any other product,
- clean the bearing face on the intercooler and on the pipe with a dry, lint-free cloth,
- always replace the clip with a new one,
- replace the new clip in the same position if the pipe is not replaced,
- always replace the pipe and/or the intercooler if they are damaged.

REMOVAL

❏ Position the vehicle on a two-post lift (see **Vehicle: Towing and lifting**) (02A, Lifting equipment).

❏ Disconnect the battery (see **Battery: Removal - Refitting**) (80A, Battery).

❏ Remove:

- the engine covers,
- the front wheels (see **Wheel: Removal - Refitting**) (35A, Wheels and tyres),
- the front wheel arch liners (see **Front wheel arch liner: Removal - Refitting**) (55A, Exterior protection),
- the engine undertray,
- the front bumper (see **Front bumper: Removal - Refitting**) (55A, Exterior protection).

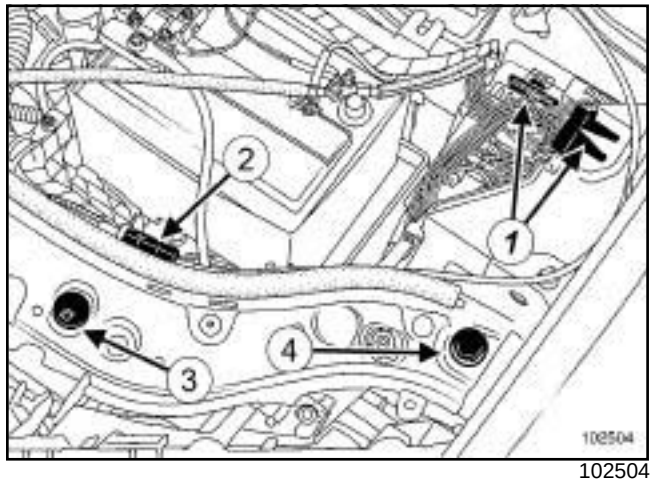

102504

❏ Disconnect the two connectors (**1**) .

❏ Unclip the bonnet opening cable (**2**) .

❏ Remove:

- the clip (**3**) ,
- the bolt (**4**) .

❏ Disconnect the screen washer pipes.

F4R or F9Q or K4J or K4M or K9K

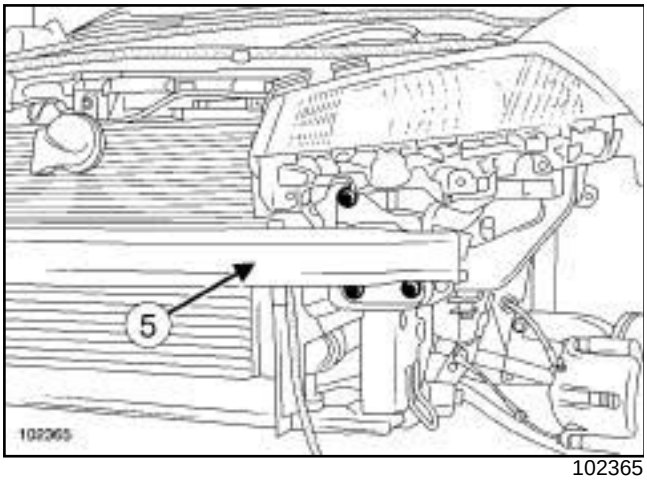

102365

❑ Remove the front cross member (**5**) .

❑ Drain the cooling system (see **19A**, **Cooling**, **Cooling circuit: Draining - Refilling**, page **19A-15**) .

❑ Remove:

- the expansion bottle cooling hose clip from the cooling radiator using the tool **(Mot. 1448)**,
- the clip of the top cooling hose on the cooling radiator using the tool **(Mot. 1448)**.

❑ Disconnect:

- the expansion bottle cooling hose on the cooling radiator,
- the top cooling hose from the cooling radiator,
- the fan assembly connector.

F4R, and 776 – F9Q – K9K

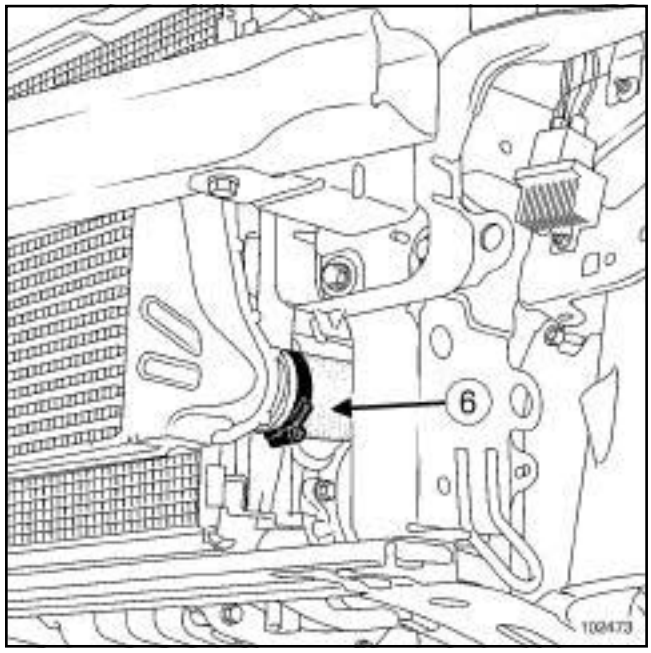

102473

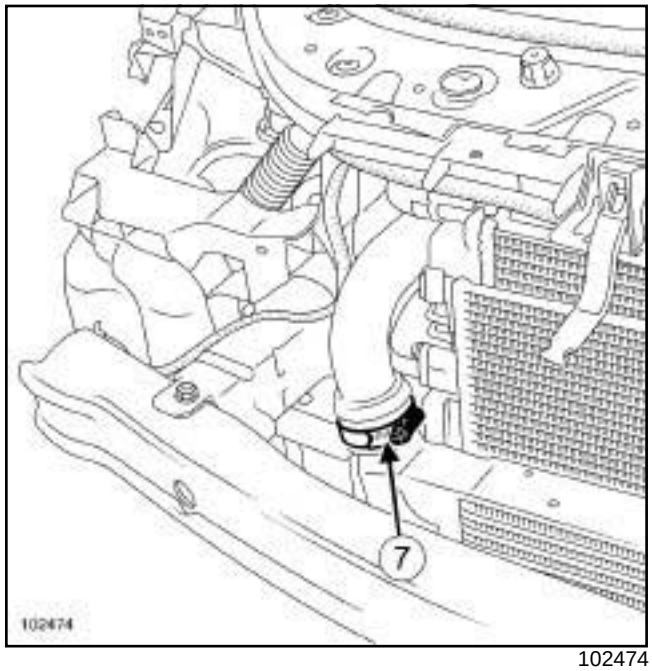

102474

❑ Disconnect the intercooler inlet (**6**) and outlet (**7**) air ducts.

❑ Remove the intercooler.

F4R or F9Q or K4J or K4M or K9K

AIR CONDITIONING or CLIMATE CONTROL

❏ Separate the condenser from the radiator.

> Note:
>
> Be careful not to damage the air conditioning piping.

❏ Remove the cooling radiator.

❏ Separate the motor-driven fan assembly from the radiator.

REFITTING

❏ Refit:

- the fan assembly on the radiator,
- the cooling radiator.

❏ Connect the fan assembly connector.

AIR CONDITIONING or CLIMATE CONTROL

❏ Refit the condenser on the radiator.

> Note:
>
> Be careful not to damage the air conditioning piping.

F4R, and 776 – F9Q – K9K

❏ Connect the air ducts to the intercooler.

❏ Torque tighten the **intercooler pipe clip (6 N.m)**.

❏ Connect:

- the expansion bottle cooling hose to the cooling radiator,
- the top cooling hose to the cooling radiator.

❏ Fit:

- the expansion bottle cooling hose clip on the cooling radiator using the tool **(Mot. 1448)**,
- the clip of the top cooling hose on the cooling radiator using the tool **(Mot. 1448)**.

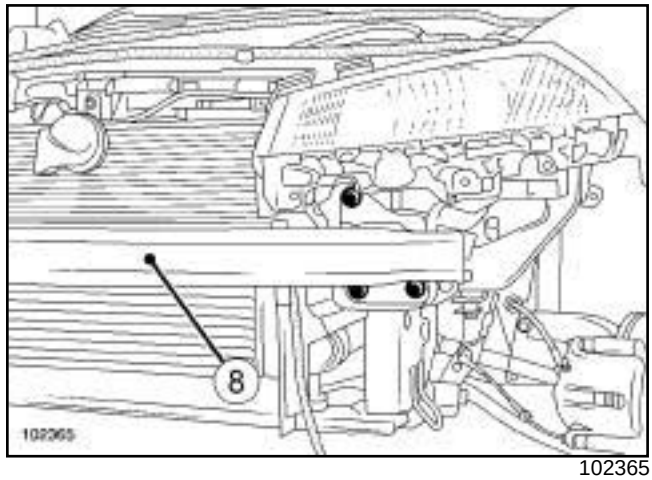

102365

❏ Refit the front (**8**) cross member.

❏ Torque tighten the **bolts of the front cross member (44 N.m)**.

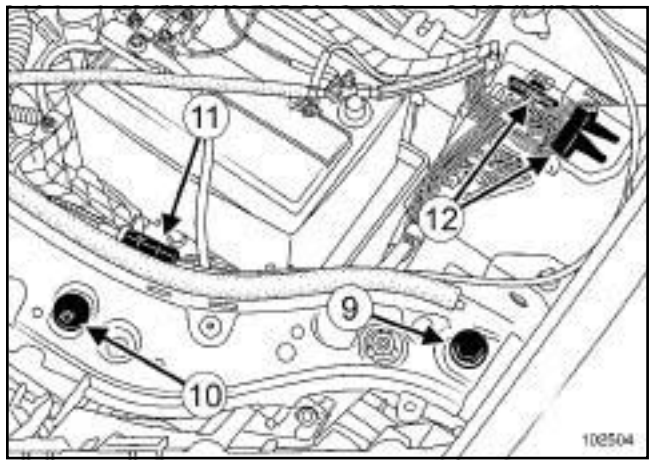

102504

❏ Refit:

- the clips (**10**) ,
- the bolts of the upper cross member (**9**) .

❏ Torque tighten the **bolts of the upper cross member (21 N.m)**.

❏ Clip on the bonnet release cable (**11**) .

❏ Connect:

- the connectors (**12**) ,
- the screen washer pipes.

F4R or F9Q or K4J or K4M or K9K

- Refit:
  - the front bumper (see **Front bumper: Removal - Refitting**) (55A, Exterior protection),
  - the front wheel arch liners (see **Front wheel arch liner: Removal - Refitting**) (55A, Exterior protection),
  - the front wheels (see **Wheel: Removal - Refitting**) (35A, Wheels and tyres),
- Connect the battery (see **Battery : Removal - Refitting**) (80A, Battery).
- Fill and bleed the cooling system (see **19A**, **Cooling**, **Cooling circuit: Draining - Refilling**, page **19A-15**) .
- Refit:
  - the engine undertray,
  - the engine covers.

Note:

It is essential to initialise the xenon bulb system (if fitted to the vehicle) (see **Xenon headlights: Adjustment**) (80C, Xenon bulbs).

B84 or C84 or E84 or K84 or L84, and M9R

Essential special tooling	
Mot. 1448	Long nose pliers for hose clips.

Tightening torques ▽	
bolts of the front cross member	**44 Nm**

IMPORTANT

The circuits are designed to be pressurised, so be careful at high temperatures (risk of serious burns).

Do not remove the cap from the expansion bottle while the engine is hot.

Take care when carrying out a repair under the bonnet, as the radiator fan(s) may start to operate without warning.

Do not open the bleed screw(s) with the engine running.

REMOVAL

I - REMOVAL PREPARATION OPERATION

❑ Position the vehicle on a two-post lift (see **Vehicle: Towing and lifting**) (MR 364, 02A, Lifting equipment).

❑ Disconnect the battery (see **Battery: Removal - Refitting**) (MR 364, 80A, Battery).

❑ Remove:

- the engine covers,
- the front bumper (see **Front bumper: Removal - Refitting**) (MR 365, 55A, Exterior protection).

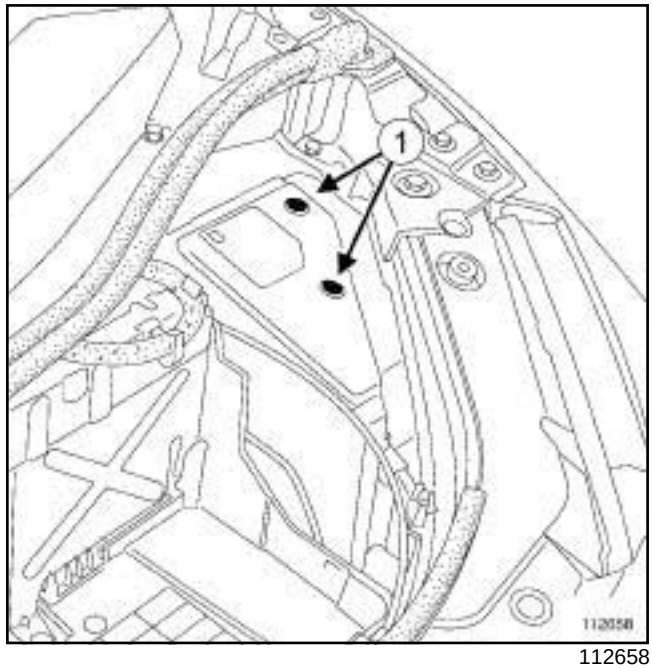

112658

❑ Remove:

- the engine accessories unit cover bolts (**1**) ,
- the engine accessories unit cover.

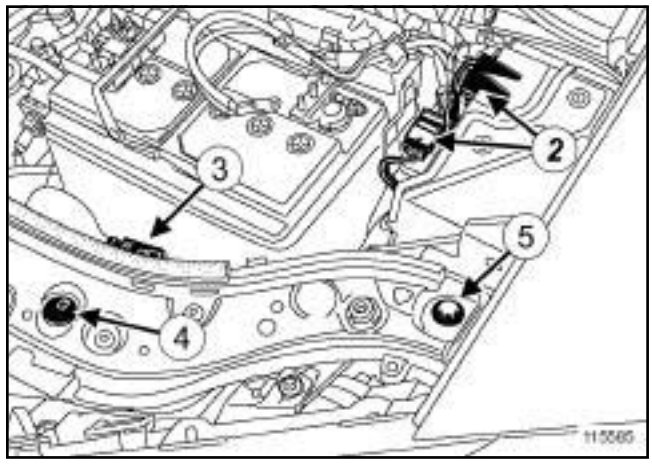

115585

❑ Disconnect the connectors (**2**) from the engine accessories unit.

❑ Unclip the bonnet release cable (**3**) .

❑ Remove:

- the front end panel clips (**4**) ,
- the front end panel upper bolts (**5**) .

B84 or C84 or E84 or K84 or L84, and M9R

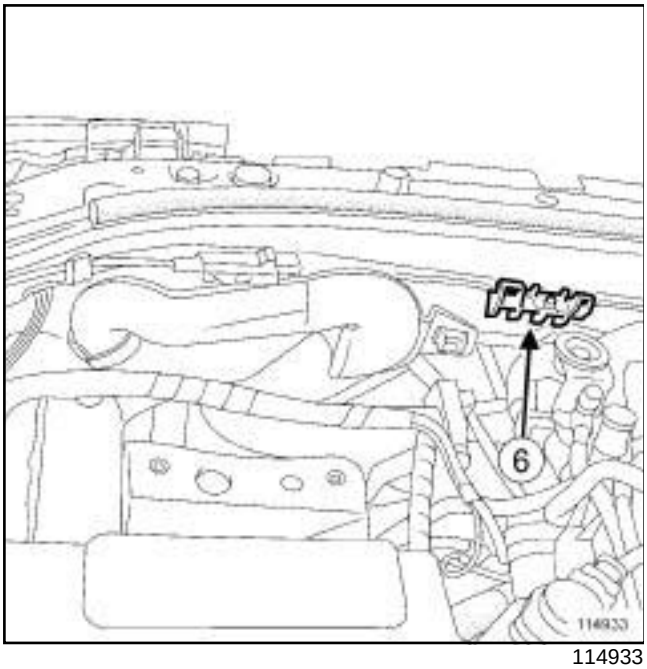

114933

❑ Unclip the air inlet scoop (**6**) .

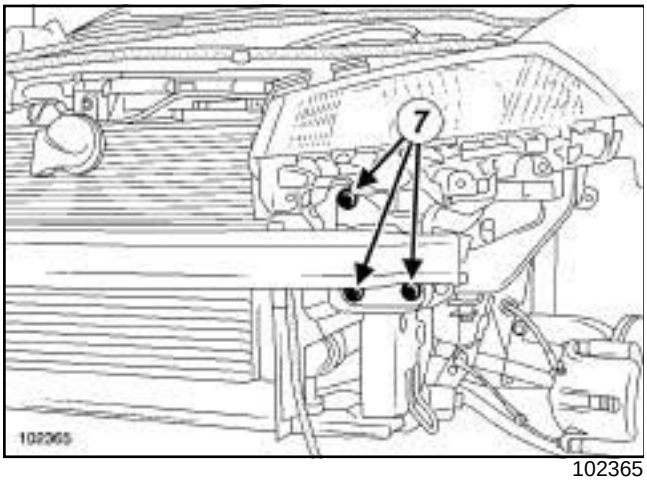

102365

❑ Remove:

- the front end panel lower bolts (**7**) ,
- the front of the vehicle.

❑ Drain the cooling system (see **19A**, **Cooling**, **Cooling circuit: Draining - Refilling**, page **19A-15**) .

❑ Remove the intercooler (see **12B**, **Turbocharging**, **Intercooler: Removal - Refitting**, page **12B-69**) .

❑ Disconnect the condenser-evaporator connecting pipe pressure sensor connector.

❑ Remove the condenser.

Note:

Do not bend the air conditioning pipes.

II - OPERATION FOR REMOVAL OF PART CONCERNED

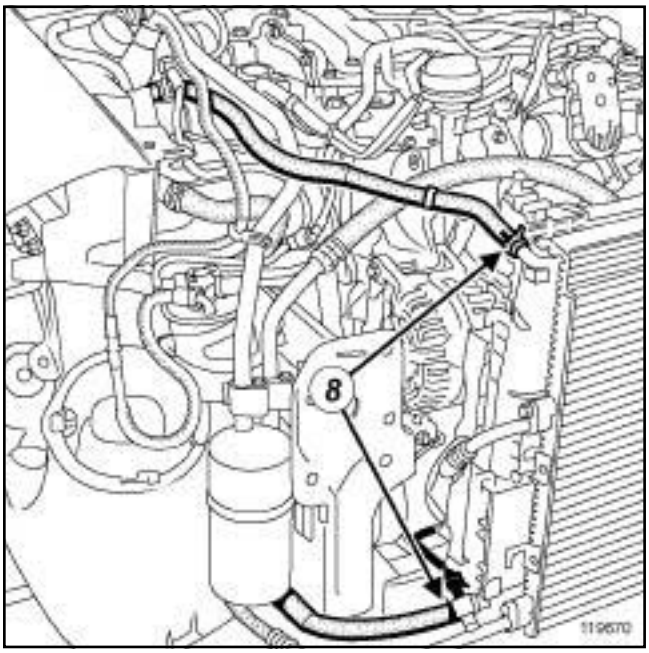

119670

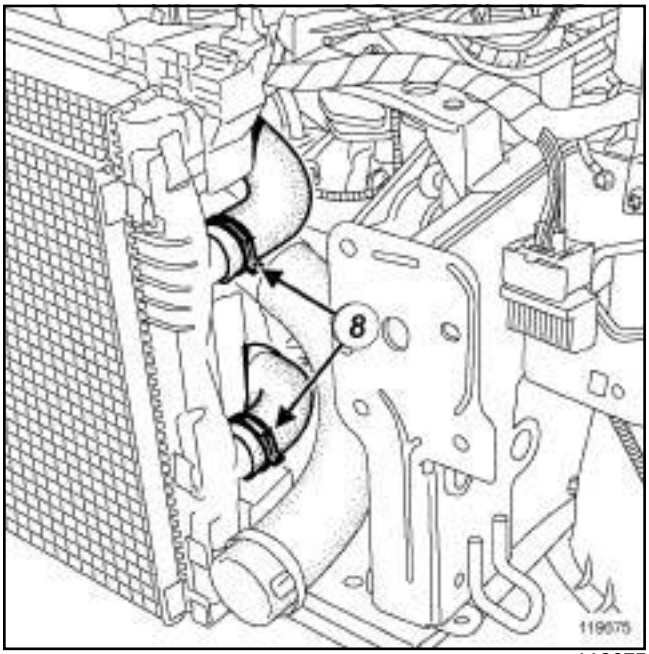

119675

❑ Remove the clips (**8**) from the cooling radiator hoses using the **(Mot. 1448)**.

❑ Disconnect the cooling radiator hoses.

❑ Disconnect the cooling fan assembly connectors.

❑ Remove the « cooling radiator - cooling fan » assembly.

B84 or C84 or E84 or K84 or L84, and M9R

REFITTING

I - REFITTING PREPARATION OPERATION

If replacing the cooling radiator

❑ Remove the engine cooling fan assembly from the cooling radiator (see **19A**, **Cooling**, **Engine cooling fan assembly: Removal - Refitting**, page **19A-55**) .

❑ Refit the engine cooling fan assembly to the new cooling radiator (see **19A**, **Cooling**, **Engine cooling fan assembly: Removal - Refitting**, page **19A-55**) .

II - REFITTING OPERATION FOR PART CONCERNED

❑ Refit the « cooling radiator - cooling fan » assembly.

❑ Connect:

- the connectors to the cooling fan assembly.
- the hoses on the radiator.

❑ Fit the clips on the hoses using the **(Mot. 1448)**.

III - FINAL OPERATION.

❑ Fit the condenser.

❑ Connect the condenser-evaporator connecting pipe pressure sensor connector.

❑ Refit:

- the intercooler (see **12B**, **Turbocharging**, **Intercooler: Removal - Refitting**, page **12B-69**) ,
- the front panel,
- the front end panel lower bolts,
- the front end panel upper bolts,
- the front end panel clips.

❑ Tighten to torque the **bolts of the front cross member (44 Nm)** ***(7)*** .

❑ Connect the engine accessories unit connectors.

❑ Refit:

- the engine accessories unit cover,
- the engine accessories unit cover bolts.

❑ Clip on the bonnet release cable.

❑ Clip on the air inlet scoop.

❑ Refit the front bumper (see **Front bumper: Removal - Refitting**) (MR 365, 55A, Exterior protection).

❑ Connect the battery (see **Battery: Removal - Refitting**) (MR 364, 80A, Battery).

❑ Perform the following operations:

- fill the cooling system (see **19A**, **Cooling**, **Cooling circuit: Draining - Refilling**, page **19A-15**) ,
- bleed the cooling system (see **19A**, **Cooling**, **Cooling circuit: Draining - Refilling**, page **19A-15**) .

❑ Refit the engine covers.

F9Q

Tightening torques ▽	
coolant pump bolts	**9 N.m**

REMOVAL

❑ Position the vehicle on a two-post lift (see **Vehicle: Towing and lifting**) (02A, Lifting equipment).

❑ Disconnect the battery (see **Battery: Removal - Refitting**) (80A, Battery).

❑ Remove:

- the engine undertray,
- the engine covers,
- the front right-hand wheel (see **Wheel: Removal - Refitting**) (35A, Wheels and tyres).

❑ Drain the cooling system (see **19A**, **Cooling**, **Cooling circuit: Draining - Refilling**, page **19A-15**) .

❑ Remove:

- the accessories belt (see **11A**, **Top and front of engine**, **Accessories belt: Removal - Refitting**, page **11A-4**) ,
- the timing belt (see **11A**, **Top and front of engine**, **Timing belt: Removal - Refitting**, page **11A-18**) .

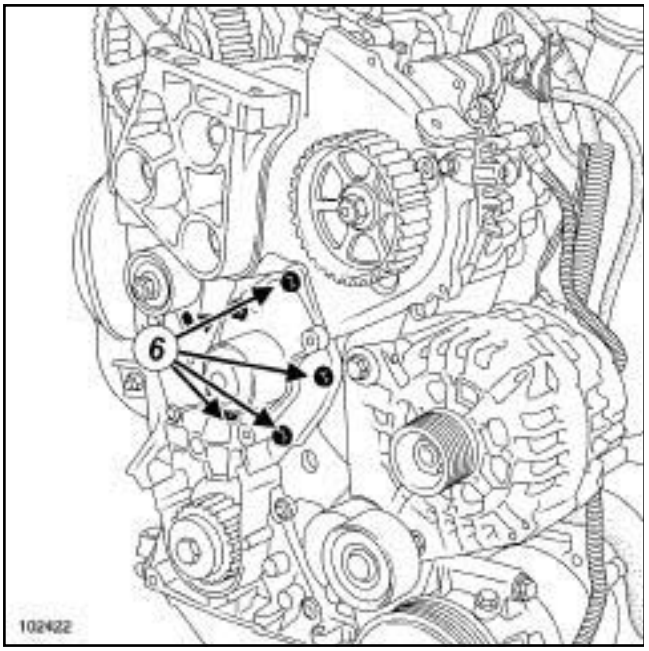

102422

❑ Remove:

- the coolant pump bolts (**6**) ,
- the coolant pump.

REFITTING

❑

WARNING
Do not scrape the joint faces of the aluminium, any damage caused to the joint face will result in a risk of leaks.

IMPORTANT
Wear leaktight gloves (Nitrile type) for this operation.

IMPORTANT
Wear goggles with side protectors for this operation.

❑ Clean the joint faces with **SUPER CLEANER FOR JOINT FACES** (see **Vehicle: Parts and ingredients for the repairwork**) (04B, Consumables - Products) to dissolve any part of the seal still adhering.

❑ Apply the product to the section to be cleaned; wait approximately ten minutes, then remove the residue using a wooden spatula.

❑ **parts always to be replaced: coolant pump seal (10,06,01,21)**

WARNING
To ensure proper sealing, the gasket surfaces must be clean, dry and not greasy (avoid any finger marks).

Note:
Apply one or two drops of **FRENETANCHE** (see **Vehicle: Parts and ingredients for the repairwork**) (04B, Consumables - Products) to the coolant pump bolts.

❑ Refit:

- the coolant pump,
- the coolant pump bolts.

F9Q

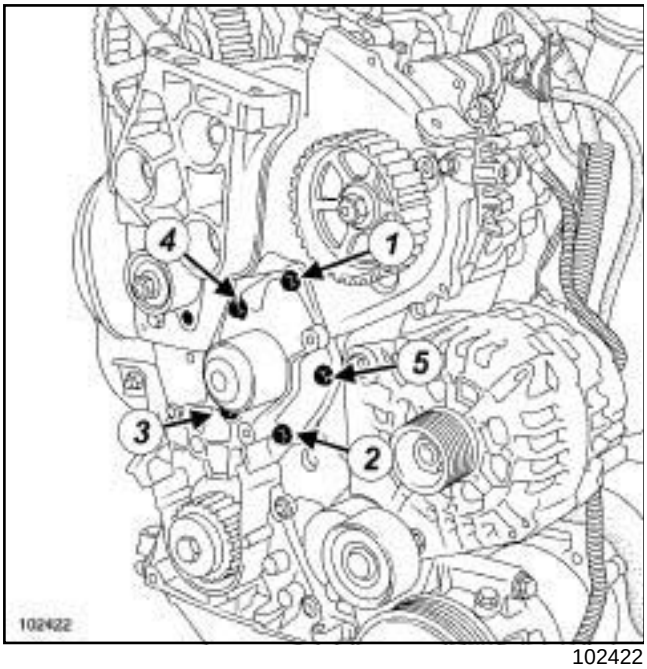

102422

- Tighten to torque and in order the **coolant pump bolts (9 N.m)**.
- Refit:
  - the timing belt (see **11A**, **Top and front of engine**, **Timing belt: Removal - Refitting**, page **11A-18**) ,
  - the accessories belt (see **11A**, **Top and front of engine**, **Accessories belt: Removal - Refitting**, page **11A-4**) .
- Connect the battery (see **Battery: Removal - Refitting**) (80A, Battery).
- Fill and bleed the cooling system (see **19A**, **Cooling**, **Cooling circuit: Draining - Refilling**, page **19A-15**) .
- Refit:
  - the engine undertrays,
  - the front right-hand wheel (see **Wheel: Removal - Refitting**) (35A, Wheels and tyres).

K4J – K4M

Tightening torques ▽	
coolant pump M8 bolt	**22 N.m**
coolant pump M6 bolts	**10 N.m**

REMOVAL

❑ Position the vehicle on a two-post lift (see **Vehicle: Towing and lifting**) (02A, Lifting equipment).

❑ Disconnect the battery (see **Battery: Removal - Refitting**) (80A, Battery).

❑ Remove:

- the engine covers,
- the front right-hand wheel (see **Wheel: Removal - Refitting**) (35A, Wheels and tyres),
- the engine undertray.

❑ Drain the engine cooling circuit (see **19A**, **Cooling**, **Cooling circuit: Draining - Refilling**, page **19A-15**) .

❑ Remove:

- the accessories belt (see **11A**, **Top and front of engine**, **Accessories belt: Removal - Refitting**, page **11A-4**) ,
- the timing belt (see **11A**, **Top and front of engine**, **Timing belt: Removal - Refitting**, page **11A-18**) .

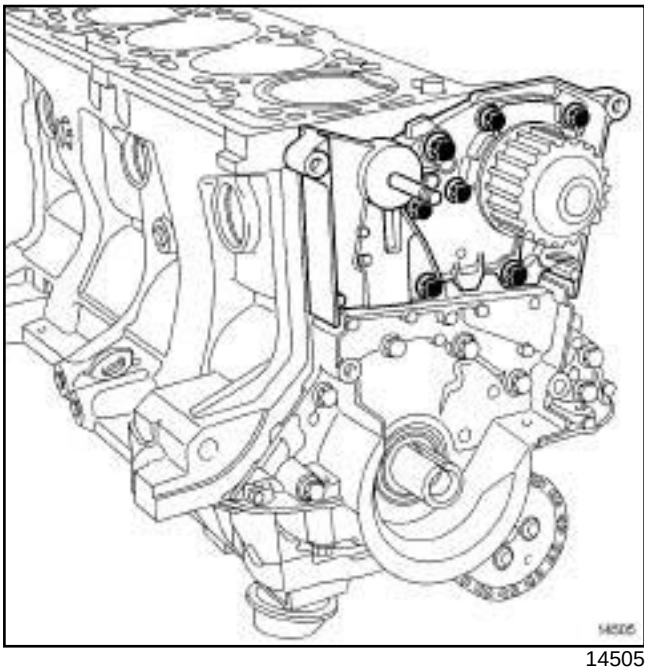

14505

❑ Remove:

- the timing tensioning roller,
- the coolant pump.

REFITTING

❑

IMPORTANT
Wear goggles with side protectors for this operation.

IMPORTANT
Wear leaktight gloves (Nitrile type) for this operation.

WARNING
Do not scrape the joint faces of the aluminium, any damage caused to the joint face will result in a risk of leaks.

❑ Clean the joint faces with **SUPER CLEANER FOR JOINT FACES** (see **Vehicle: Parts and ingredients for the repairwork**) (04B, Consumables - Products) to dissolve any part of the seal still adhering.

❑ Apply the product to the section to be cleaned; wait approximately ten minutes, then remove the residue using a wooden spatula.

WARNING
To ensure proper sealing, the gasket surfaces must be clean, dry and not greasy (avoid any finger marks).

WARNING
Applying excess sealant could cause it to be squeezed out when parts are tightened. A mixture of sealant and fluid could damage certain components (engine, radiator, etc.).

K4J – K4M

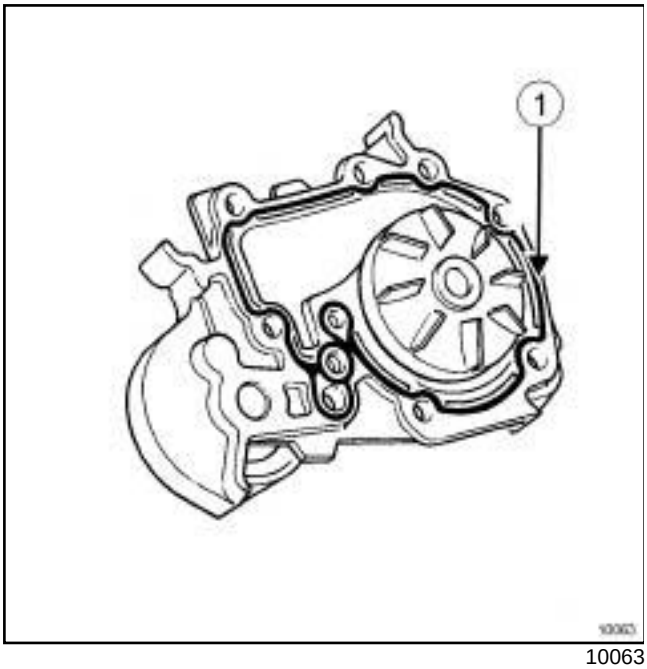

10063

❑ Apply at (**1**) a bead of **RESIN ADHESIVE** (see **Vehicle: Parts and ingredients for the repairwork**) (04B, Consumables - Products) **0.6 mm** to **1 mm** wide.

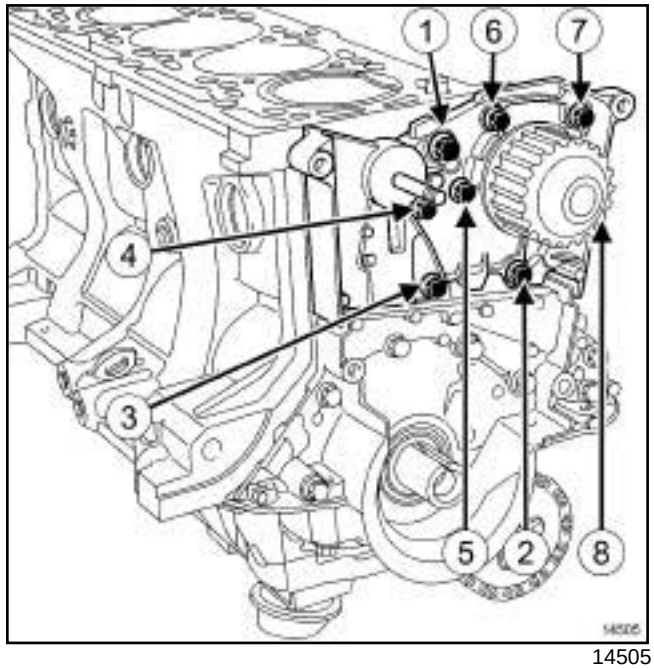

14505

❑

> Note:
>
> Apply one to two drops of **FRENETANCHE** (see **Vehicle: Parts and ingredients for the repairwork**) (04B, Consumables - Products) to the coolant pump bolts (**1**) and (**4**) .

❑ Refit the coolant pump.

❑ Pretighten the **M6 coolant pump bolt** to **8 N.m** and the **M8 coolant pump bolt** to **8 N.m**.

❑ Tighten to torque and in order:

- the **coolant pump M8 bolt (22 N.m)**,

- the **coolant pump M6 bolts (10 N.m)**.

❑ Refit:

- the timing belt (see **11A**, **Top and front of engine**, **Timing belt: Removal - Refitting**, page **11A-18**) ,

- the accessories belt (see **11A**, **Top and front of engine**, **Accessories belt: Removal - Refitting**, page **11A-4**) .

❑ Connect the battery (see **Battery : Removal - Refitting**) (80A, Battery).

❑ Fill and bleed the cooling system (see **19A**, **Cooling**, **Cooling circuit: Draining - Refilling**, page **19A-15**) .

❑ Refit the engine undertray.

K9K

Tightening torques ▽	
coolant pump bolts	**10 N.m**

REMOVAL

❏ Position the vehicle on a two-post lift (see **Vehicle: Towing and lifting**) (02A, Lifting equipment).

❏ Disconnect the battery (see **Battery: Removal - Refitting**) (80A, Battery).

❏ Remove:

- the engine covers,
- the engine undertray,
- the front right-hand wheel (see **Wheel: Removal - Refitting**) (35A, Wheels and tyres).

❏ Drain the engine cooling circuit (see **19A**, **Cooling**, **Cooling circuit: Draining - Refilling**, page **19A-15**) .

❏ Remove:

- the accessories belt (see **11A**, **Top and front of engine**, **Accessories belt: Removal - Refitting**, page **11A-4**) ,
- the timing belt (see **11A**, **Top and front of engine**, **Timing belt: Removal - Refitting**, page **11A-18**) .

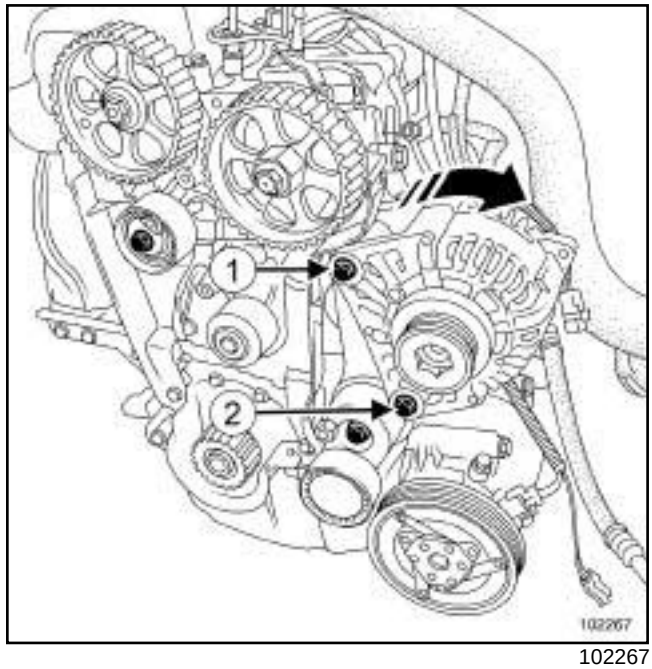

102267

❏ Disconnect the electrical connections from the alternator.

❏ Remove the alternator upper mounting (**1**) .

❏ Loosen the alternator lower mounting (**2**) .

❏ Tilt the alternator forward.

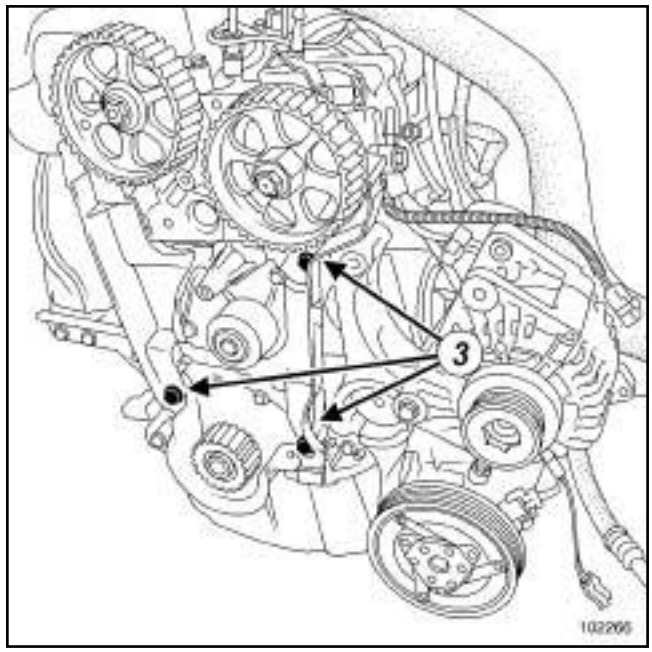

102266

❏ Remove:

- the inner timing cover bolts (**3**) ,
- the inner timing cover.

K9K

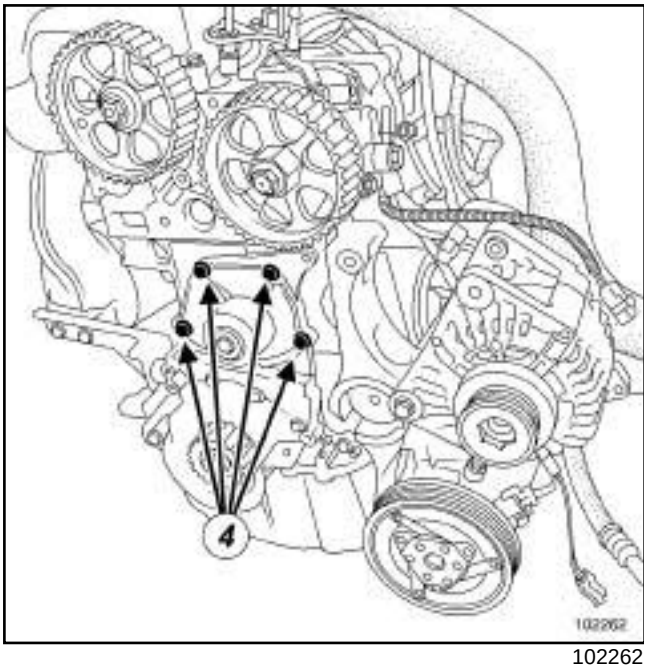

102262

❑ Remove:

- the coolant pump bolts (**4**) ,
- the coolant pump.

REFITTING

❑ **parts always to be replaced: coolant pump seal (10,06,01,21)**.

> **WARNING**
> Do not scrape the joint faces of the aluminium, any damage caused to the joint face will result in a risk of leaks.

> **IMPORTANT**
> Wear goggles with side protectors for this operation.

> **IMPORTANT**
> Wear leaktight gloves (Nitrile type) for this operation.

❑ Clean the joint faces with **SUPER CLEANER FOR JOINT FACES** (see **Vehicle: Parts and ingredients for the repairwork**) (04B, Consumables - Products) to dissolve any part of the seal still adhering.

❑ Apply the product to the part to be cleaned, wait approximately ten minutes then remove the residue with a wooden spatula.

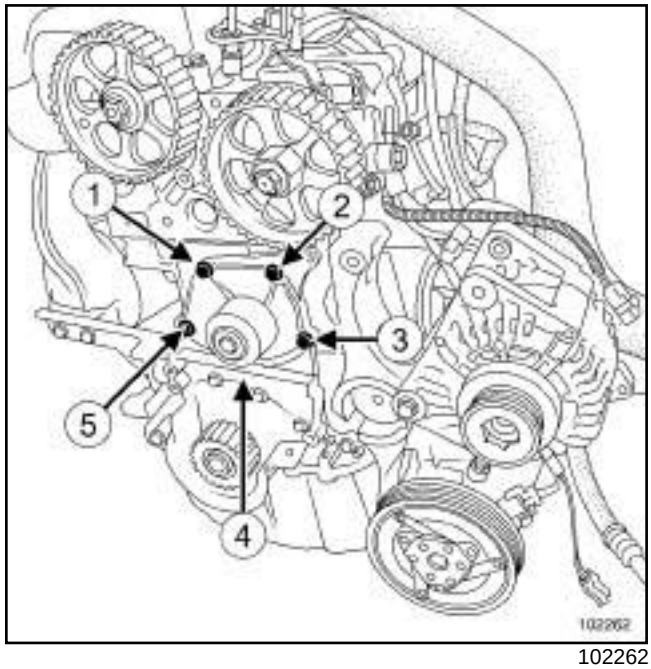

102262

❑

> **WARNING**
> The gasket faces must be clean, dry and free from grease (avoid finger marks).

> Note:
> Apply one or two drops of **FRENETANCHE** (see **Vehicle: Parts and ingredients for the repairwork**) (04B, Consumables - Products) to the coolant pump bolts.

❑ Refit:

- the coolant pump fitted with a new seal,
- the coolant pump bolts (**1**) to (**5**) .

❑ Tighten to torque and in order the **coolant pump bolts (10 N.m)**.

K9K

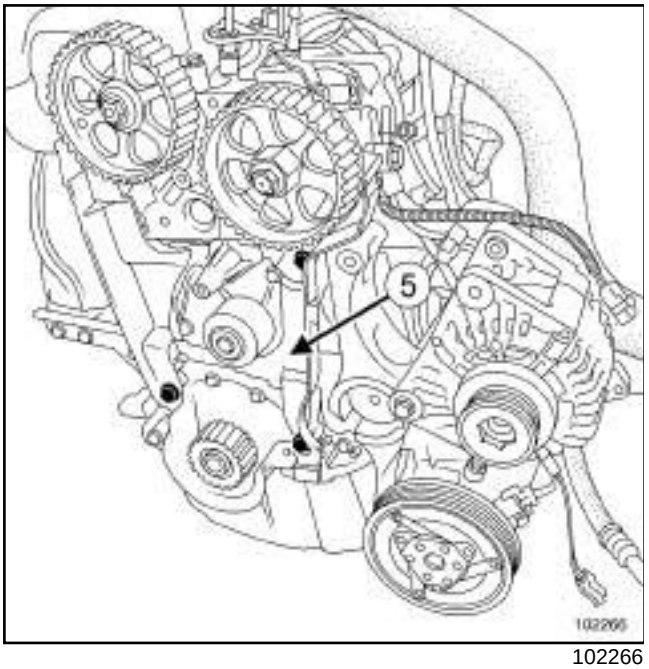

102266

❑ Refit:

- the inner timing cover (**5**) ,
- the alternator (see **16A**, **Starting - Charging**, **Alternator: Removal - Refitting**, page **16A-3**) ,
- the timing belt (see **11A**, **Top and front of engine**, **Timing belt: Removal - Refitting**, page **11A-18**) ,
- the accessories belt (see **11A**, **Top and front of engine**, **Accessories belt: Removal - Refitting**, page **11A-4**) .

❑ Connect the battery (see **Battery : Removal - Refitting**) (80A, Battery).

❑ Fill and bleed the cooling system (see **19A**, **Cooling**, **Cooling circuit: Draining - Refilling**, page **19A-15**) .

❑ Refit:

- the engine undertray,
- the front right-hand wheel (see **Wheel: Removal - Refitting**) (35A, Wheels and tyres).

F4R, and 770 or 771 or 776

Tightening torques ▽	
coolant pump bolts	**9 N.m**

REMOVAL

❑ Position the vehicle on a two-post lift (see **Vehicle: Towing and lifting**) (02A, Lifting equipment).

❑ Disconnect the battery (see **Battery: Removal - Refitting**) (80A, Battery).

❑ Remove:

- the engine undertray,
- the engine covers,
- the front right-hand wheel (see **Wheel: Removal - Refitting**) (35A, Wheels and tyres).

❑ Drain the cooling system (see **19A**, **Cooling**, **Cooling circuit: Draining - Refilling**, page **19A-15**) .

❑ Remove:

- the accessories belt (see **11A**, **Top and front of engine**, **Accessories belt: Removal - Refitting**, page **11A-4**) ,
- the timing belt (see **11A**, **Top and front of engine**, **Timing belt: Removal - Refitting**, page **11A-18**) .

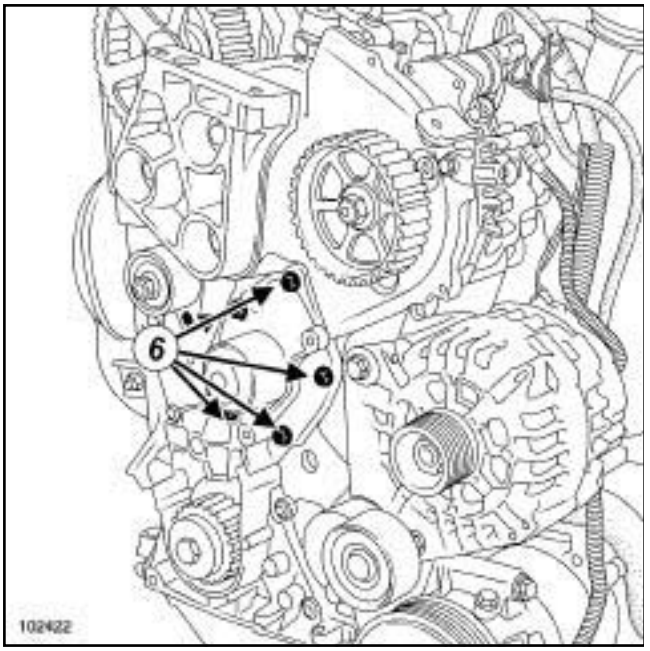

102422

❑ Remove:

- the coolant pump bolts (**6**) ,
- the coolant pump.

REFITTING

❑

WARNING
Do not scrape the joint faces of the aluminium, any damage caused to the joint face will result in a risk of leaks.

IMPORTANT
Wear goggles with side protectors for this operation.

IMPORTANT
Wear leaktight gloves (Nitrile type) for this operation.

❑ Clean the joint faces with **SUPER CLEANER FOR JOINT FACES** (see **Vehicle: Parts and ingredients for the repairwork**) (04B, Consumables - Products) to dissolve any part of the seal still adhering.

❑ Apply the product to the section to be cleaned; wait approximately ten minutes, then remove the residue using a wooden spatula.

❑ **parts always to be replaced: coolant pump seal (10,06,01,21)**

WARNING
The joint faces must be clean, dry and free from grease (avoid finger marks).

Note:
Apply one or two drops of **FRENETANCHE** (see **Vehicle: Parts and ingredients for the repairwork**) (04B, Consumables - Products) to the coolant pump bolts.

❑ Refit the coolant pump.

F4R, and 770 or 771 or 776

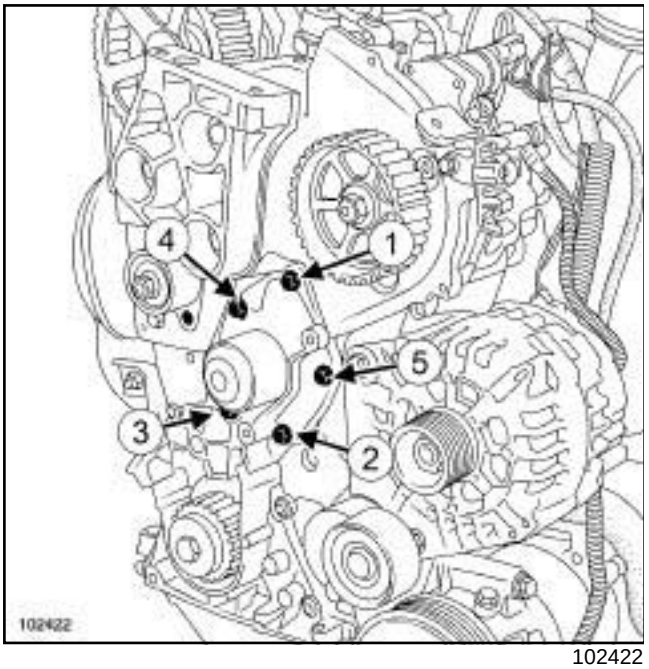

102422

- ❑ Tighten to torque and in order the **coolant pump bolts (9 N.m)**.
- ❑ Refit:
  - the timing belt (see **11A**, **Top and front of engine**, **Timing belt: Removal - Refitting**, page **11A-18**) ,
  - the accessories belt (see **11A**, **Top and front of engine**, **Accessories belt: Removal - Refitting**, page **11A-4**) .
- ❑ Connect the battery (see **Battery : Removal - Refitting**) (80A, Battery).
- ❑ Fill and bleed the cooling system (see **19A**, **Cooling**, **Cooling circuit: Draining - Refilling**, page **19A-15**) .
- ❑ Refit:
  - the engine undertray,
  - the front right-hand wheel (see **Wheel: Removal - Refitting**) (35A, Wheels and tyres).

B84 or C84 or E84 or K84 or L84, and M9R

Essential special tooling	
Mot. 1390	Support for removing/refitting the engine - gearbox assembly.

Tightening torques ▽	
coolant pump bolts	**25 N.m**
coolant pump pulley bolts	**21 N.m**
front end panel upper bolts	**21 N.m**
front end panel lower bolts	**44 N.m**

REMOVAL

I - REMOVAL PREPARATION OPERATION

❑ Position the vehicle on the two-post lift (see **Vehicle: Towing and lifting**) (02A, Lifting equipment).

❑ Disconnect the battery (see **Battery: Removal - Refitting**) (80A, Battery).

WARNING
When carrying out a repair that requires a complete change, it is essential to flush the circuit with clean water, blast compressed air through the circuit to drive out the water, fill and bleed the circuit and then measure the effective protection.

The criteria to be met are:

- protection down to **-25°C ± 2** for cold and temperate countries,
- protection down to **-40°C ± 2** for "extreme cold" countries.

IMPORTANT
The circuits are designed to be pressurised, so be careful at high temperatures (risk of serious burns).

Do not remove the cap from the expansion bottle while the engine is hot.

Take care when carrying out a repair under the bonnet, as the radiator fan(s) may start to operate without warning.

Do not open the bleed screw(s) with the engine running.

❑ Remove:

- the engine cover,
- the front right-hand wheel (see **Wheel: Removal - Refitting**) (35A, Wheels and tyres),
- the front right-hand wheel arch liner (see **Front wheel arch liner: Removal - Refitting**) (55A, Exterior protection),
- the engine undertray bolts,
- the engine undertray.

B84 or C84 or E84 or K84 or L84, and M9R

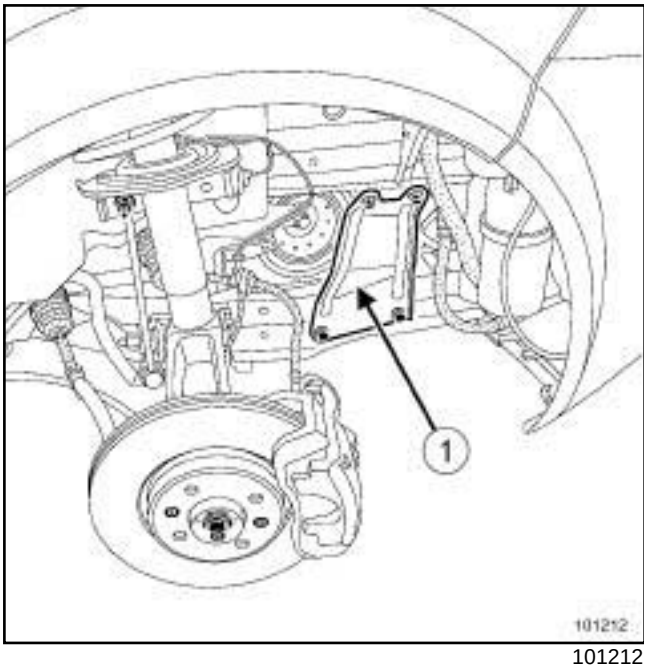

101212

❑ Remove:

- the half sub-frame cross member side reinforcement bolts,
- the half sub-frame cross member side reinforcement (**1**) ,
- the lower engine tie-bar (see **19D**, **Engine mounting**, **Lower engine tie-bar: Removal - Refitting**, page **19D-36**) ,
- the front bumper (see **Front bumper: Removal - Refitting**) (55A, Exterior protection).

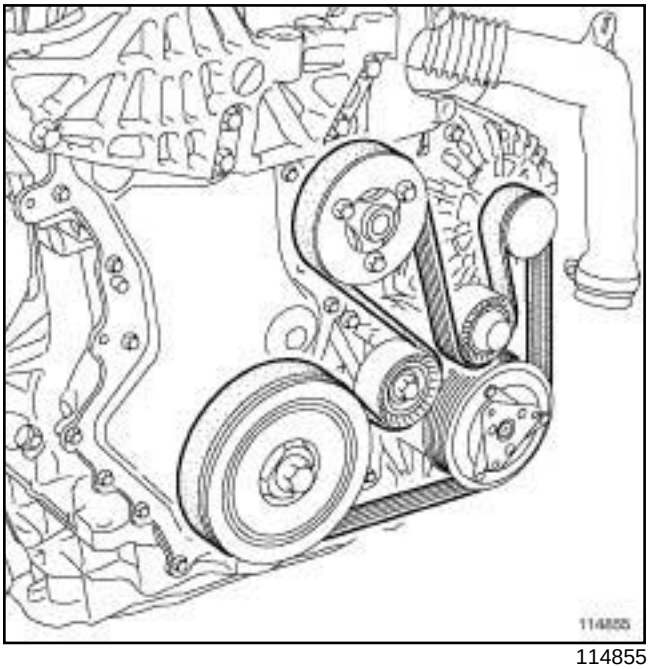

114855

❑ Remove the accessories belt (see **11A**, **Top and front of engine**, **Accessories belt: Removal - Refitting**, page **11A-4**) .

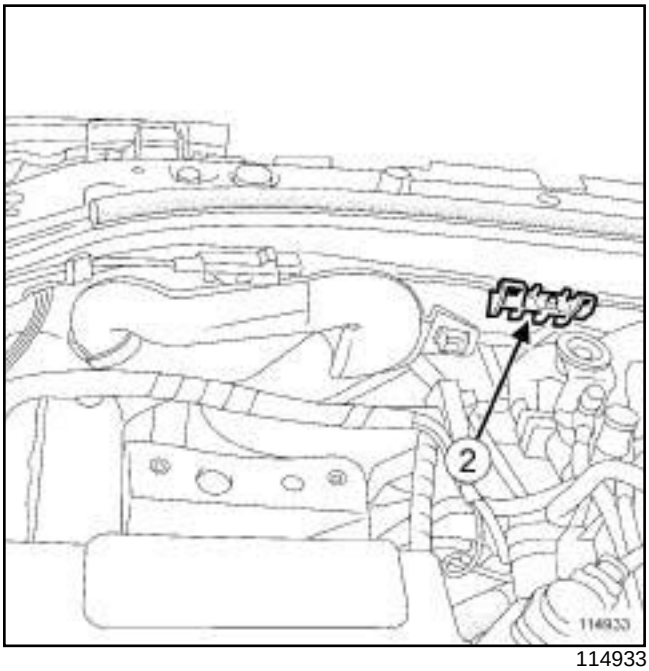

114933

❑ Unclip the air inlet scoop (**2**) .

B84 or C84 or E84 or K84 or L84, and M9R

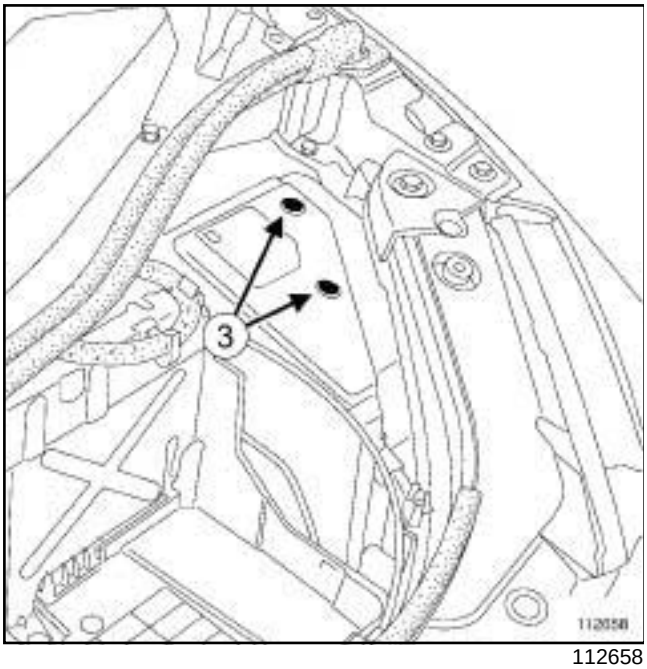

112658

❑ Remove the engine accessories unit cover bolts (**3**) .

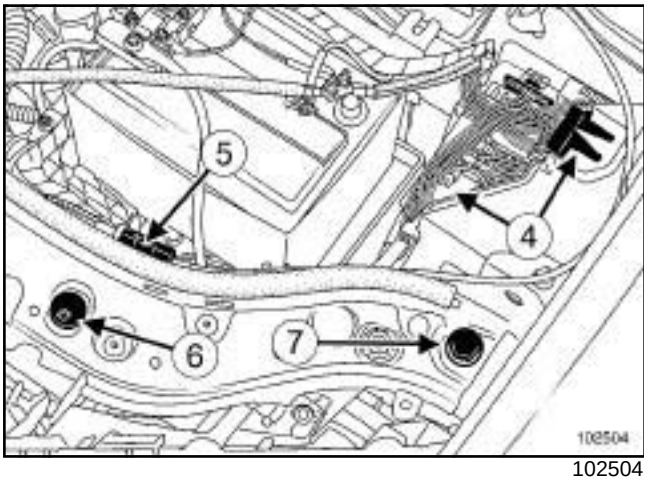

102504

❑ Disconnect the connectors (**4**) .

❑ Unclip the bonnet release cable (**5**) .

❑ Remove:

- the front end panel clip (**6**) ,
- the front end panel upper bolts (**7**) .

❑ Disconnect the screen washer pipes.

❑ Drain the cooling system (see **19A**, **Cooling**, **Cooling circuit: Draining - Refilling**, page **19A-15**) .

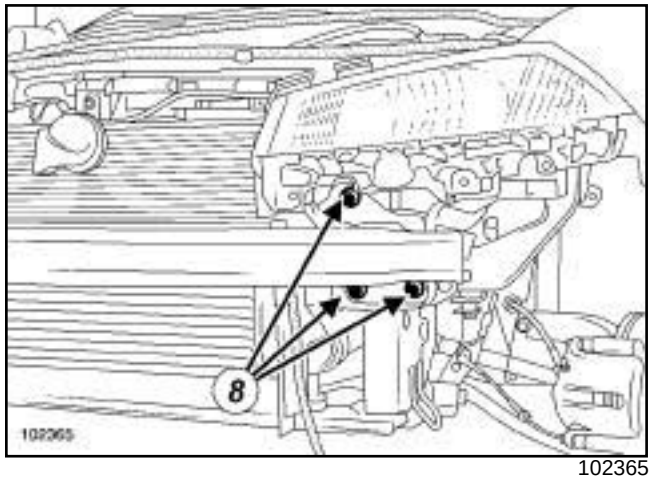

102365

❑ Remove:

- the front end panel bolts (**8**) ,
- the front of the vehicle.

❑ Remove the « cooling radiator - condenser - intercooler » assembly from its housing and move it forwards.

❑ Place the engine on two pads of the **(Mot. 1390)**.

❑ Remove

- the right-hand suspended mounting support (see **19D**, **Engine mounting**, **Right-hand suspended engine mounting: Removal - Refitting**, page **19D-20**) ,
- the upper engine tie-bar (see **19D**, **Engine mounting**, **Right-hand suspended engine mounting: Removal - Refitting**, page **19D-20**) .

B84 or C84 or E84 or K84 or L84, and M9R

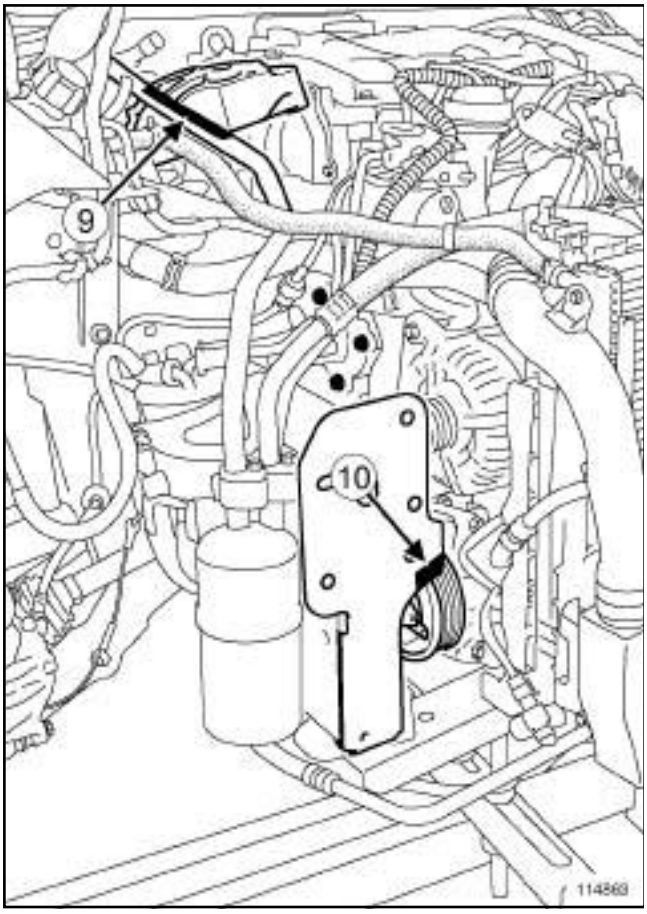

114863

❑ At the same time, tilt the **(Mot. 1390)** forwards, lift the right-hand suspended engine mounting (**9**) and bring the compressor pulley level (**10**) .

II - OPERATION FOR REMOVAL OF PART CONCERNED

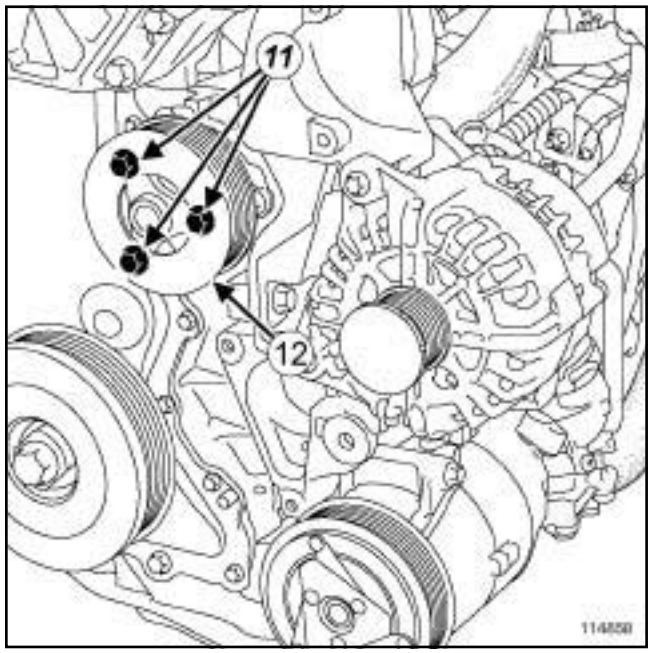

114858

❑ Remove:

- the coolant pump pulley bolts (**11**) ,
- the coolant pump pulley (**12**) .

B84 or C84 or E84 or K84 or L84, and M9R

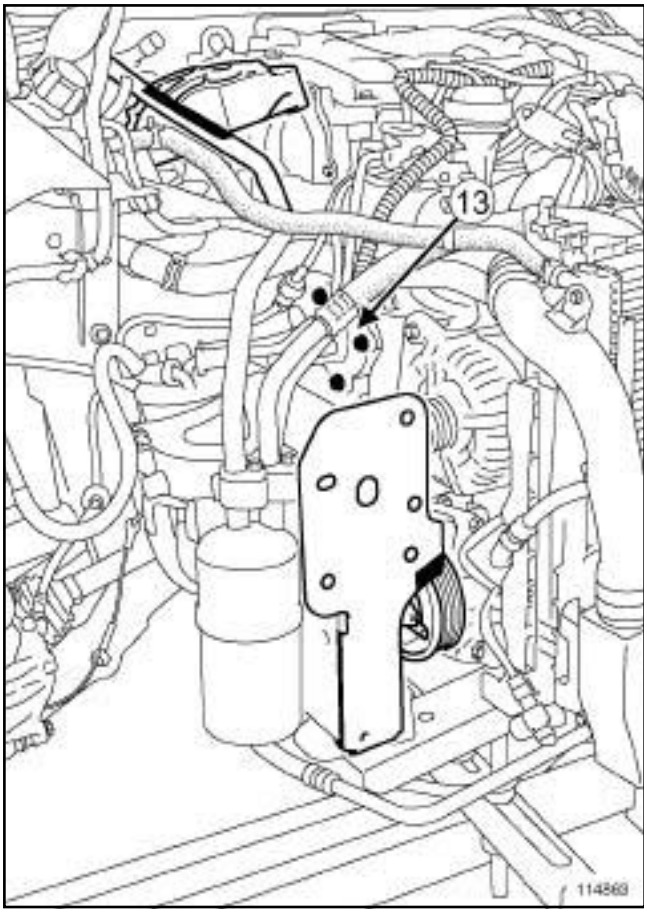

114863

❑ Remove:

- the coolant pump bolts,
- the coolant pump (**13**) .

REFITTING

I - REFITTING PREPARATION OPERATION

❑ **parts always to be replaced: coolant pump seal (10,06,01,21)**.

❑ Clean the pump shaft cooling hole on the cylinder block if the coolant pump is being reused.

❑ Apply soapy water onto the seal before refitting the coolant pump.

II - REFITTING OPERATION FOR PART CONCERNED

❑ Refit the coolant pump.

❑ Check that the water pump is supported by the cylinder block before tightening the bolts.

❑ Tighten:

- in order and to torque the **coolant pump bolts (25 N.m)**,
- to torque the **coolant pump pulley bolts (21 N.m)**.

B84 or C84 or E84 or K84 or L84, and M9R

III - FINAL OPERATION

❑ Position

- the « engine - gearbox » assembly in the vehicle,
- the « cooling radiator - condenser - intercooler » assembly on the half sub-frame.

❑ Refit

- the right-hand suspended mounting support (see **19D**, **Engine mounting**, **Right-hand suspended engine mounting: Removal - Refitting**, page **19D-20**) ,
- the front of the vehicle.

❑ Torque tighten:

- the **front end panel upper bolts (21 N.m)**,
- the **front end panel lower bolts (44 N.m)**.

❑ Clip:

- the bonnet release cable,
- the air inlet scoop.

❑ Connect the screen washer pipes.

❑ Refit:

- the front bumper (see **Front bumper: Removal - Refitting**) (55A, Exterior protection),
- the lower engine tie-bar (see **19D**, **Engine mounting**, **Lower engine tie-bar: Removal - Refitting**, page **19D-36**) ,
- the accessories belt (see **11A**, **Top and front of engine**, **Accessories belt: Removal - Refitting**, page **11A-4**) ,
- the upper engine tie-bar (see **19D**, **Engine mounting**, **Right-hand suspended engine mounting: Removal - Refitting**, page **19D-20**) ,
- the half sub-frame cross member side reinforcement,
- the half sub-frame cross member side reinforcement bolts,
- the front right-hand wheel arch liner (see **Front wheel arch liner: Removal - Refitting**) (55A, Exterior protection),
- the front right-hand wheel (see **Wheel: Removal - Refitting**) (35A, Wheels and tyres).

❑ Connect the battery (see **Battery: Removal - Refitting**) (80A, Battery).

❑ Fill and bleed the cooling system (see **19A**, **Cooling**, **Cooling circuit: Draining - Refilling**, page **19A-15**) .

❑ Refit the engine undertray.

Thermostat: Removal - Refitting

B84 or C84 or G84 or S84, and F9Q

The thermostat is integral with the water chamber.

Replace the « water chamber - thermostat » assembly if the thermostat is faulty (see **19A**, **Cooling**, **Plenum chamber: Removal - Refitting**, page **19A-45**) .

B84 or C84 or E84 or K84 or L84, and M9R

Essential special tooling	
Mot. 1448	Long nose pliers for hose clips.

WARNING

When carrying out a repair that requires a complete change, it is essential to flush the circuit with clean water, blast compressed air through the circuit to drive out the water, fill and bleed the circuit and then measure the effective protection.

The criteria to be met are:

- protection down to -25˚C ±2 for cold and temperate countries,
- protection up to -40˚C ±2 for countries with extremely cold climates.

IMPORTANT

The circuits are designed to be pressurised, so be careful at high temperatures (risk of serious burns).

Do not remove the cap from the expansion bottle while the engine is hot.

During an operation under the bonnet, be aware that one (or several) of the radiator cooling fan(s) may operate unexpectedly.

Do not open the bleed screw(s) with the engine running.

REMOVAL

I - REMOVAL PREPARATION OPERATION

❑ Position the vehicle on a two-post lift (see **Vehicle: Towing and lifting**) (MR 364, 02A, Lifting equipment).

❑ Remove:

- the battery (see **Battery: Removal - Refitting**) (MR 364, 80A, Battery),
- the battery tray (see **Battery tray: Removal - Refitting**) (MR 364, 80A, Battery).

❑ Drain the cooling system (see **19A**, **Cooling**, **Cooling circuit: Draining - Refilling**, page **19A-15**) .

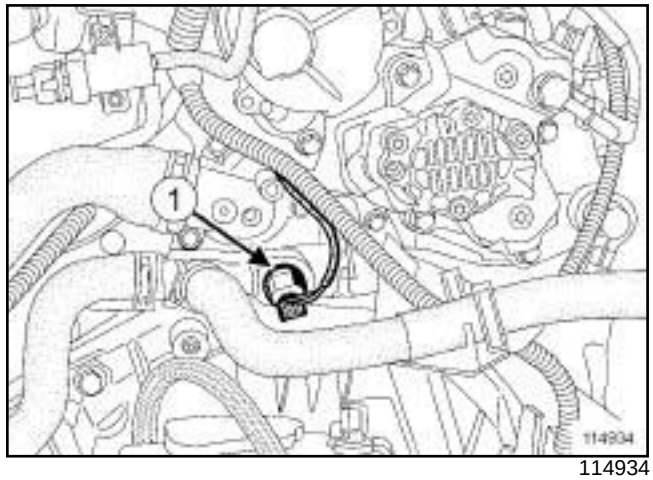

114934

❑ Disconnect the coolant temperature sensor connector (**1**) .

II - OPERATION FOR REMOVAL OF PART CONCERNED

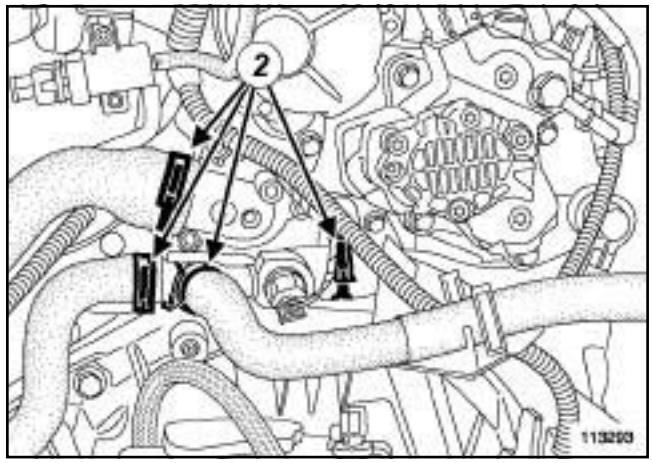

113293

❑ Remove the water chamber cooling hose clips (**2**) using theoror **(Mot. 1448)**.

❑ Disconnect the cooling hoses from the water chamber.

❑ Unpick the wiring harness on the water chamber.

B84 or C84 or E84 or K84 or L84, and M9R

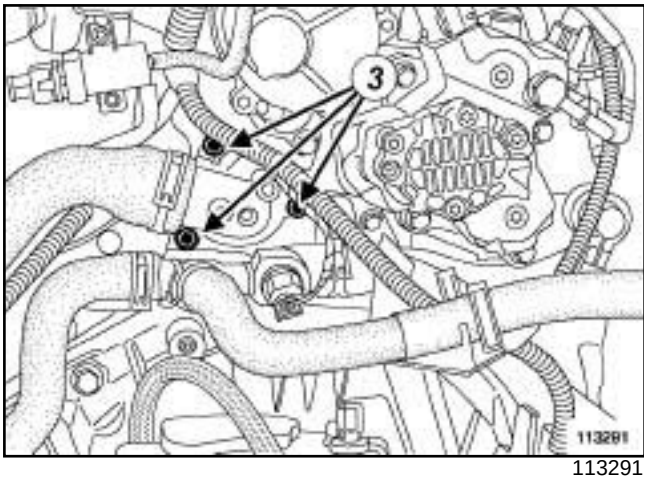

113291

❑ Remove:

- the water chamber bolts (**3**) ,
- the water chamber.

REFITTING

I - REFITTING PREPARATIONS OPERATION

❑ Replace the seal of the water chamber.

> **WARNING**
> The seal faces must be clean, dry and free from grease (avoid finger marks).

II - REFITTING OPERATION FOR PART CONCERNED

❑ Remove:

- the water chamber,
- the water chamber bolts.

❑ Connect the water chamber cooling hoses.

❑ Refit the water chamber cooling hose clips using theoror **(Mot. 1448)**.

III - FINAL OPERATION.

❑ Connect the coolant temperature sensor connector.

❑ Refit:

- the battery tray (see **Battery tray: Removal - Refitting**) (MR 364, 80A, Battery),
- the battery (see **Battery: Removal - Refitting**) (MR 364, 80A, Battery).

❑ Perform the following operations:

- fill the cooling system (see **19A**, **Cooling**, **Cooling circuit: Draining - Refilling**, page **19A-15**) ,
- bleed the cooling system (see **19A**, **Cooling**, **Cooling circuit: Draining - Refilling**, page **19A-15**) .

F9Q

Tightening torques ▽	
water chamber bolts	**10 N.m**

IMPORTANT

When working in the engine compartment, take care as the radiator fan(s) may start up unexpectedly (risk of being cut).

To avoid any risk of serious burns when the engine is hot:

- do not open the expansion bottle cap,
- do not drain the cooling system,
- do not open the bleed screw(s).

WARNING

When carrying out a repair that requires a complete change, it is essential to flush the circuit with clean water, blast compressed air through the circuit to drive out the water, fill and bleed the circuit and then measure the effective protection.

The criteria to be met are:

- protection down to **-25°C ± 2** for cold and temperate countries,
- protection down to **-40°C ± 2** for "extreme cold" countries.

WARNING

Prepare for the flow of fluid, and protect the surrounding components.

REMOVAL

I - REMOVAL PREPARATION OPERATION

❏ Position the vehicle on a two-post lift (see **Vehicle: Towing and lifting**) (02A, Lifting equipment).

❏ Remove:

- the engine covers,
- the engine undertray.

❏ Drain the cooling system (see **19A**, **Cooling**, **Cooling circuit: Draining - Refilling**, page **19A-15**) .

❏ Remove:

- the battery (see **Battery: Removal - Refitting**) (80A, Battery),
- the battery tray (see **Battery tray: Removal - Refitting**) (80A, Battery).

II - OPERATION FOR REMOVAL OF PART CONCERNED

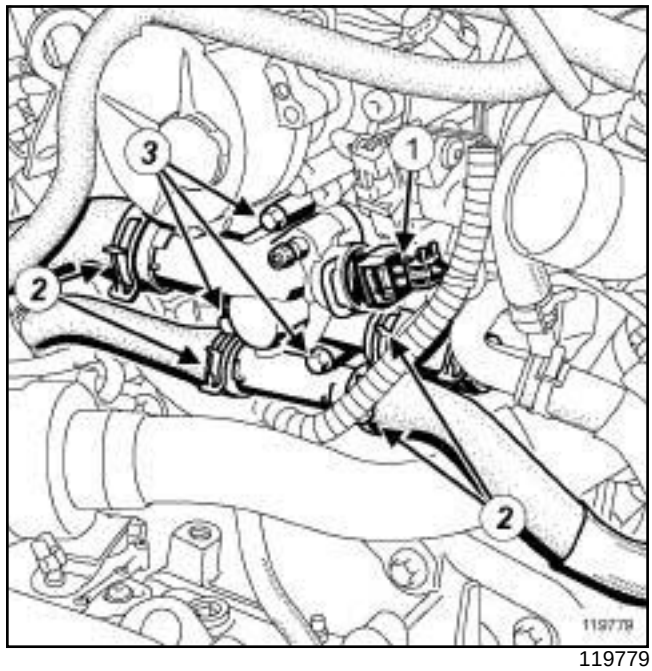

119779

❏ Disconnect the coolant temperature sensor connector (**1**) .

❏ Separate the hose clips (**2**) on the water chamber.

❏ Disconnect the cooling hoses from the water chamber.

❏ Remove:

- the water chamber bolts (**3**) ,
- the water chamber.

REFITTING

I - REFITTING PREPARATION OPERATION

❏ Clean the joint face.

II - REFITTING OPERATION FOR PART CONCERNED

❏ Refit:

- the water chamber fitted with a new seal,
- the water chamber bolts.

F9Q

- ❑ Torque tighten the **water chamber bolts (10 N.m)**.
- ❑ Connect the hoses to the water chamber.
- ❑ Fit the clips on the water chamber hoses.
- ❑ Connect the coolant temperature sensor connector.

III - FINAL OPERATION

- ❑ Refit:
  - the battery tray (see **Battery tray: Removal - Refitting**) (80A, Battery),
  - the battery (see **Battery: Removal - Refitting**) (80A, Battery).
- ❑ Fill and bleed the cooling system (see **19A**, **Cooling**, **Cooling circuit: Draining - Refilling**, page **19A-15**) .
- ❑ Check that there are no leaks.
- ❑ Refit:
  - the engine undertray,
  - the engine covers.

K9K

Essential special tooling	
Mot. 1202-01	Pliers for large hose clips.
Mot. 1202-02	Pliers for small hose clips.
Mot. 1448	Long nose pliers for hose clips.

IMPORTANT
Wear leaktight gloves (Nitrile type) for this operation.

IMPORTANT
Wear heat protective gloves during the operation.

IMPORTANT
The circuits are designed to be pressurised, so be careful at high temperatures (risk of serious burns).

Do not remove the cap from the expansion bottle while the engine is hot.

Take care when carrying out a repair under the bonnet, as the radiator fan(s) may start to operate without warning.

Do not open the bleed screw(s) with the engine running.

WARNING
Prepare for the flow of fluid, and protect the surrounding components.

REMOVAL

I - REMOVAL PREPARATION OPERATION

❑ Position the vehicle on a two-post lift (see **Vehicle: Towing and lifting**) (02A, Lifting equipment).

❑ Remove:

- the engine cover,
- the battery (see **Battery: Removal - Refitting**) (80A, Battery),
- the battery tray (see **Battery tray: Removal - Refitting**) (80A, Battery),
- the engine undertray bolts,
- the engine undertray.

❑ Drain the engine cooling system (see **19A**, **Cooling**, **Cooling circuit: Draining - Refilling**, page **19A-15**) .

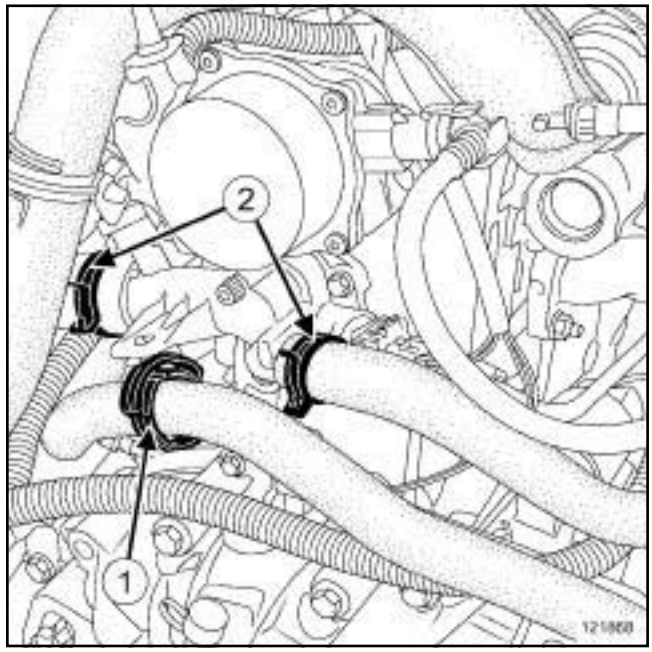

121868

❑ Unclip the hose from the coolant pump inlet pipe at (**1**) .

❑ Separate the clips (**2**) on the water chamber hoses using the **(Mot. 1202-01)** or **(Mot. 1202-02)** or **(Mot. 1448)**.

❑ Disconnect:

- the water chamber hoses,
- the coolant temperature sensor connector.

K9K

II - OPERATION FOR REMOVAL OF PART CONCERNED

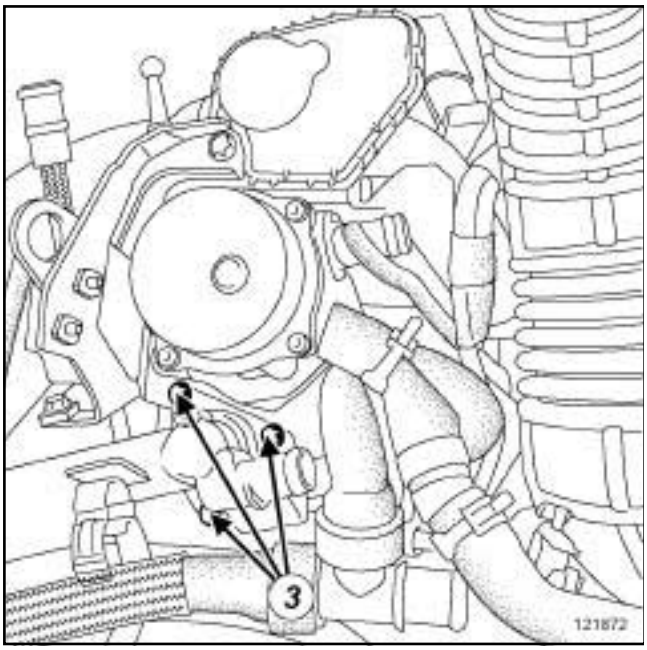

121872

❑ Remove:

- the water chamber bolts (**3**) ,
- the water chamber.

REFITTING

I - REFITTING PREPARATION OPERATION

If replacing the water chamber

❑ Unclip the water chamber coolant temperature sensor clip.

❑ Remove the water chamber coolant temperature sensor.

❑ Refit the coolant temperature sensor onto the new water chamber.

❑ Clip the coolant temperature sensor clip onto the new water chamber.

II - REFITTING OPERATION FOR PART CONCERNED

❑ Refit the water chamber.

III - FINAL OPERATION

❑ Connect:

- the coolant temperature sensor connector,
- the water chamber hoses to the water chamber.

❑ Fit the clips on the water chamber hoses using the **(Mot. 1202-01)** or **(Mot. 1202-02)** or **(Mot. 1448)**.

❑ Clip the hose onto the coolant pump inlet pipe.

❑ Refit:

- the engine undertray,
- the battery tray (see **Battery tray: Removal - Refitting**) (80A, Battery),
- the battery (see **Battery : Removal - Refitting**) (80A, Battery),
- the engine cover.

❑ Fill and bleed the cooling system (see **19A**, **Cooling**, **Cooling circuit: Draining - Refilling**, page **19A-15**) .

F4R, and 774 or 776

Essential special tooling	
Mot. 1448	Long nose pliers for hose clips.

IMPORTANT

When working in the engine compartment, take care as the radiator fan(s) may start up unexpectedly (risk of being cut).

To avoid any risk of serious burns when the engine is hot:

- do not open the expansion bottle cap,
- do not drain the cooling system,
- do not open the bleed screw(s).

WARNING

When carrying out a repair that requires a complete change, it is essential to flush the circuit with clean water, blast compressed air through the circuit to drive out the water, fill and bleed the circuit and then measure the effective protection.

The criteria to be met are:

- protection down to **-25°C ± 2** for cold and temperate countries,
- protection down to **-40°C ± 2** for "extreme cold" countries.

WARNING

Before the operation, protect the electrical accessories to prevent any risk of short circuiting and protect the belts to avoid damaging them.

REMOVAL

I - REMOVAL PREPARATION OPERATION

❑ Position the vehicle on a two-post lift (see **Vehicle: Towing and lifting**) (02A, Lifting equipment).

❑ Remove:

- the engine cover,
- the engine undertray bolts,
- the engine undertray,
- the battery (see **Battery: Removal - Refitting**) (80A, Battery),
- the battery tray (see **Battery tray: Removal - Refitting**) (80A, Battery).

❑ Drain the cooling system (see **19A**, **Cooling**, **Cooling circuit: Draining - Refilling**, page **19A-15**) .

II - OPERATION FOR REMOVAL OF PART CONCERNED

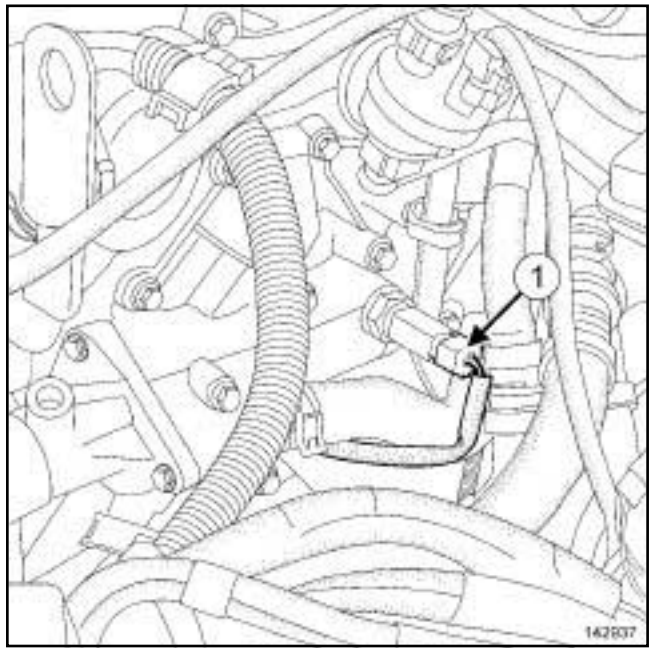

142937

❑ Disconnect the connector (**1**) from the coolant temperature sensor

F4R, and 774 or 776

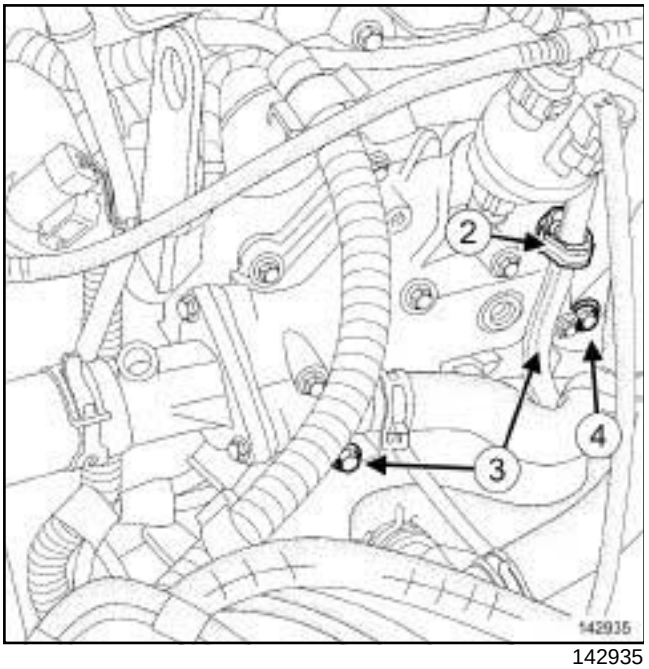

142935

❑ Unclip the manual gearbox breather pipe (**2**) from the water chamber.

❑ Remove:

- the bolts (**3**) of the engine wiring channel from the water chamber,
- the bolt (**4**) of the heater matrix hose retaining bracket.

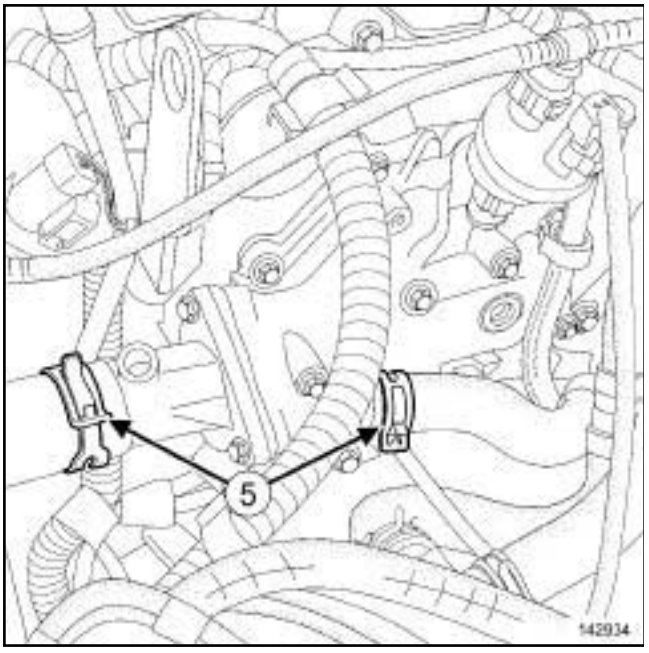

142934

❑ Use the tool **(Mot. 1448)** to separate the clips (**5**) on the water chamber inlet and outlet hoses.

❑ Disconnect the water chamber inlet and outlet hoses.

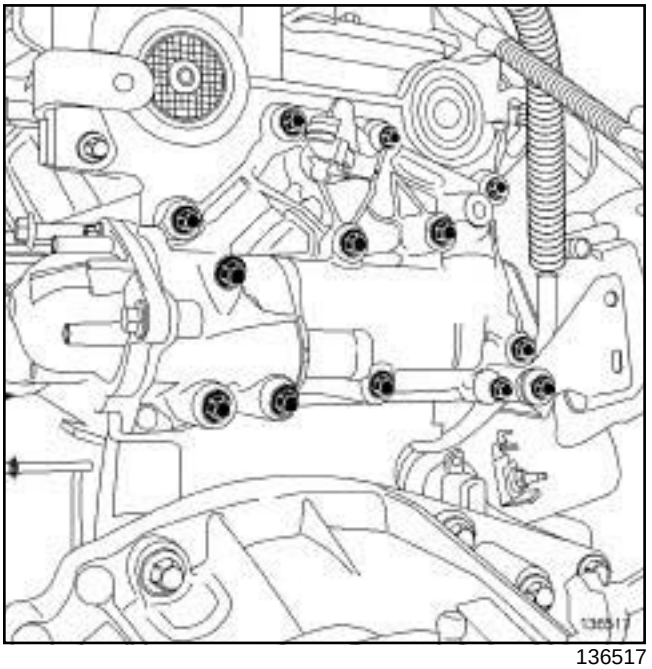

136517

❑

> Note:
>
> The water chamber bolts are not the same length, mark their position.

❑ Remove:

- the water chamber bolts,
- the water chamber,
- the water chamber seal.

F4R, and 774 or 776

If replacing the water chamber

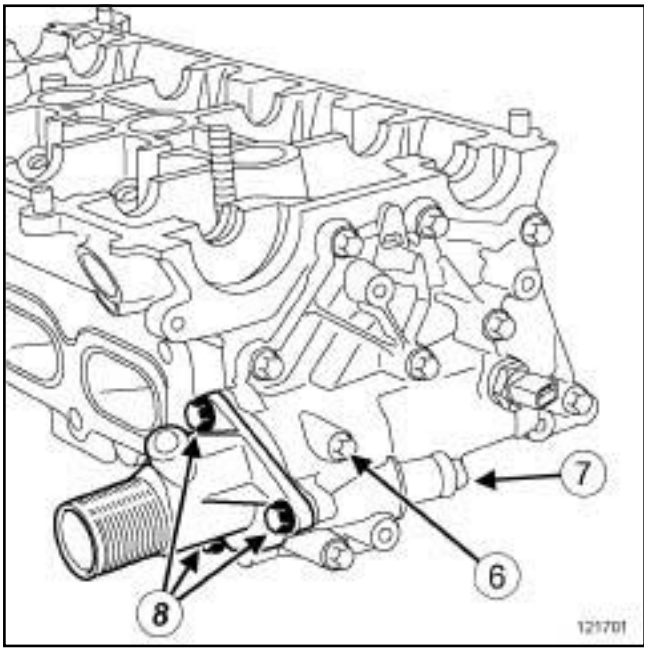

121701

❑ Remove:

- the bleed screw (**6**) ,
- the metal tube (**7**) ,
- the thermostat unit bolts (**8**) ,
- the thermostat,
- the thermostat seal,
- the coolant temperature sensor (see **19A**, **Cooling**, **Coolant temperature sensor: Removal - Refitting**, page **19A-81**) .

REFITTING

I - REFITTING PREPARATION OPERATION

❑ **parts always to be replaced: Cylinder head coolant outlet unit seal (10,06,01,19)**.

❑ Use **SURFACE CLEANER** (see **Vehicle: Parts and ingredients for the repairwork**) (04A, Consumables - Products) to clean and degrease:

- the cylinder head joint face,
- the water chamber joint face, if being reused.

> **WARNING**
> Do not scrape the joint faces of the aluminium, any damage caused to the joint face will result in a risk of leaks.

> **WARNING**
> To ensure proper sealing, the gasket surfaces must be clean, dry and not greasy (avoid any finger marks).

If replacing the water chamber

❑ **parts always to be replaced: thermostat seal (10, 06,03,03)**.

❑ Use **SURFACE CLEANER** (see **Vehicle: Parts and ingredients for the repairwork**) (04A, Consumables - Products) to clean and degrease the joint face of the thermostat unit.

> **WARNING**
> To ensure proper sealing, the gasket surfaces must be clean, dry and not greasy (avoid any finger marks).

❑ Refit:

- the coolant temperature sensor (see **19A**, **Cooling**, **Coolant temperature sensor: Removal - Refitting**, page **19A-81**) ,
- the metal tube,
- the bleed screw,
- the thermostat fitted with a new seal,
- the thermostat unit,
- the thermostat unit bolts.

II - REFITTING OPERATION FOR PART CONCERNED

❑ Refit:

- a new seal on the water chamber,
- the water chamber,
- the water chamber bolts.

F4R, and 774 or 776

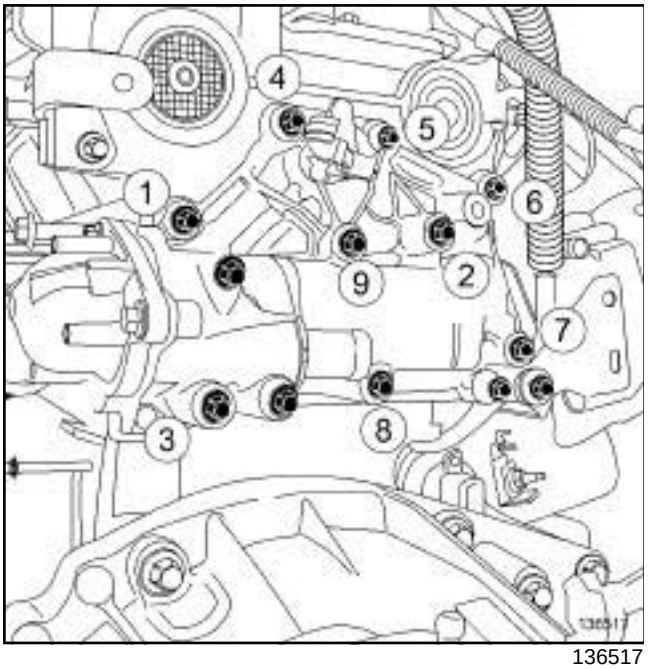

136517

- ❑ Tighten the following in order:
  - the water chamber bolts from (**3**) to (**9**) ,
  - the water chamber bolts (**1**) and (**2**) .
- ❑ Connect the inlet and outlet hoses to the water chamber.
- ❑ Use the tool **(Mot. 1448)** to fit the clips on the water chamber inlet and outlet hoses.
- ❑ Refit:
  - the bolt of the heater matrix hose retaining bracket,
  - the bolts of the engine wiring channel on the water chamber.
- ❑ Clip the manual gearbox breather pipe onto the water chamber.
- ❑ Connect the coolant temperature sensor connector

III - FINAL OPERATION

- ❑ Refit:
  - the battery tray (see **Battery tray: Removal - Refitting**) (80A, Battery),
  - the battery (see **Battery: Removal - Refitting**) (80A, Battery).
- ❑ Fill and bleed the cooling system (see **19A**, **Cooling**, **Cooling circuit: Draining - Refilling**, page **19A-15**) .
- ❑ Refit:
  - the engine undertray,
  - the engine cover.

F9Q

Tightening torques ▽	
front end panel lower bolts	**21 N.m**
front end panel upper bolts	**44 N.m**

IMPORTANT

The circuits are designed to be pressurised, so be careful at high temperatures (risk of serious burns).

Do not remove the cap from the expansion bottle while the engine is hot.

Take care when carrying out a repair under the bonnet, as the radiator fan(s) may start to operate without warning.

Do not open the bleed screw(s) with the engine running.

REMOVAL

I - REMOVAL PREPARATION OPERATION

❏ Position the vehicle on a two-post lift (see **Vehicle: Towing and lifting**) (02A, Lifting equipment).

❏ Disconnect the battery (see **Battery: Removal - Refitting**) (80A, Battery).

❏ Remove:

- the engine covers,
- the front bumper (see **Front bumper: Removal - Refitting**) (55A, Exterior protection).

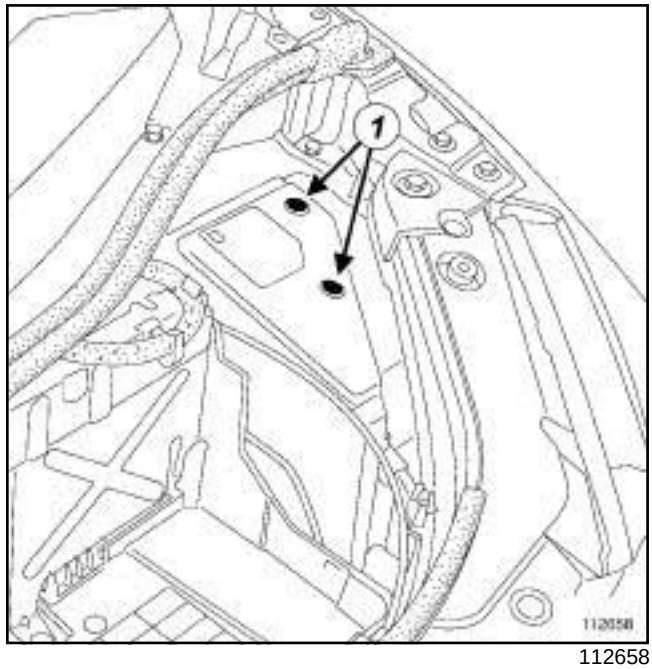

112658

❏ Remove:

- the engine accessories unit cover bolts (**1**) ,
- the engine accessories unit cover.

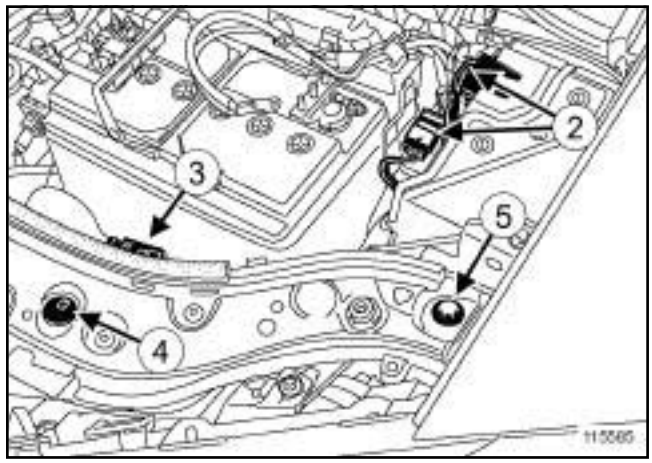

115585

❏ Disconnect the connectors (**2**) from the engine accessories unit.

❏ Unfasten the bonnet opening cable (**3**) .

❏ Remove:

- the clips (**4**) ,
- the front end panel upper bolts (**5**) .

F9Q

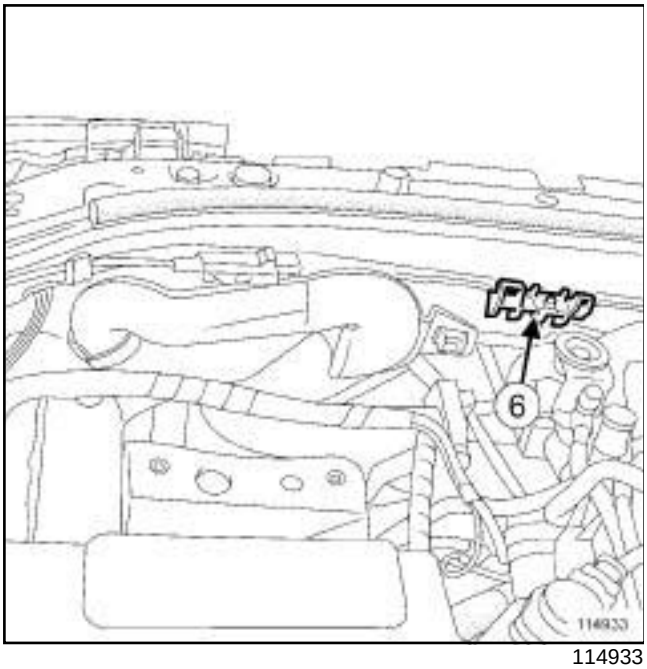

114933

❑ Unclip the air inlet scoop (**6**) .

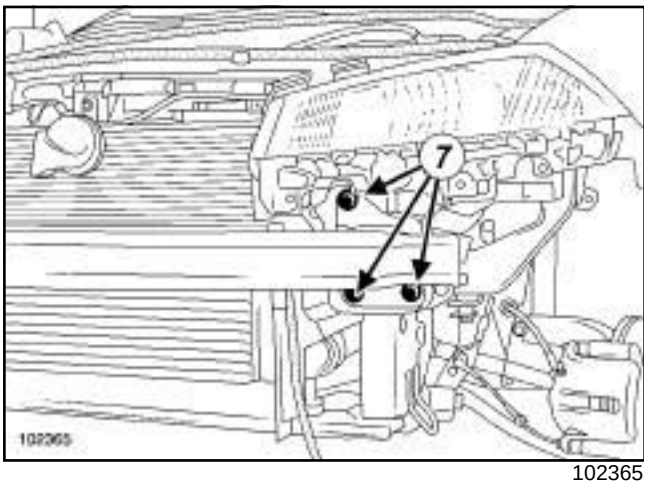

102365

❑ Remove:

- the front end panel lower bolts (**7**) ,
- the front of the vehicle.

❑ Drain the cooling system (see **19A**, **Cooling**, **Cooling circuit: Draining - Refilling**, page **19A-15**) .

❑ Remove:

- the intercooler (see **12B**, **Turbocharging**, **Intercooler: Removal - Refitting**, page **12B-69**) ,
- the « cooling radiator - cooling fan » assembly (see **19A**, **Cooling**, **Cooling radiator: Removal - Refitting**, page **19A-22**) .

II - OPERATION FOR REMOVAL OF PART CONCERNED

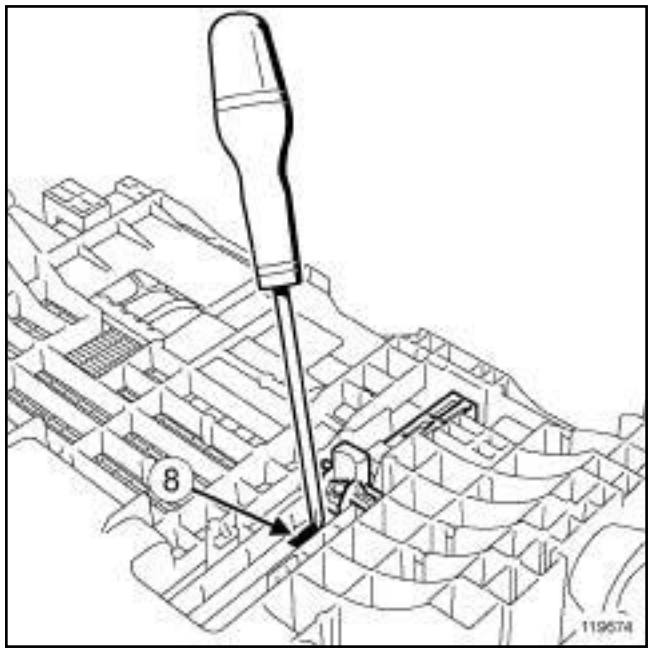

119674

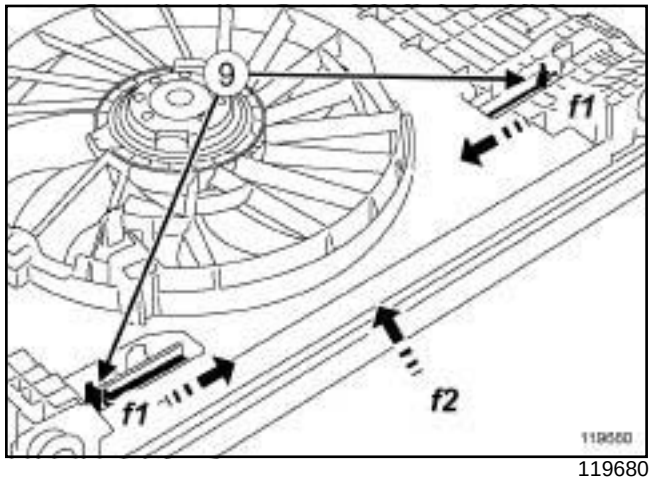

119680

❑ Press on the locking tabs (**8**) lightly using a screwdriver.

❑ Slide the locking slides (**9**) in the direction of the arrows (**f1**) .

❑ Remove the motor-driven fan assembly from the radiator, by sliding it in the direction of the arrow (**f2**) .

REFITTING

I - REFITTING OPERATION FOR PART CONCERNED

❑ Refit the engine cooling fan assembly to the cooling radiator.

❑ Slide the locking slides.

F9Q

- Check that the slides are locked properly by checking the condition and position of the tabs.

> Note:
>
> The slides can only be moved if the tabs are pressed.

II - FINAL OPERATION

- Refit:
  - the « cooling radiator - cooling fan » assembly (see **19A**, **Cooling**, **Cooling radiator: Removal - Refitting**, page **19A-22**) ,
  - the intercooler,
  - the front panel,
  - the clips.
- Torque tighten:
  - the **front end panel lower bolts (21 N.m)**,
  - the **front end panel upper bolts (44 N.m)**.
- Connect the engine accessories unit connectors.
- Refit:
  - the engine accessories unit cover,
  - the engine accessories unit cover bolts.
- Clip the bonnet opening cable.
- Clip on the air inlet scoop.
- Refit the front bumper (see **Front bumper: Removal - Refitting**) (55A, Exterior protection).
- Connect the battery (see **Battery : Removal - Refitting**) (80A, Battery).
- Fill and bleed the cooling system (see **19A**, **Cooling**, **Cooling circuit: Draining - Refilling**, page **19A-15**) .
- Refit the engine covers.

B84 or C84 or E84 or K84 or L84, and M9R

Tightening torques ▽	
front end panel lower bolts	**44 N.m**
front end panel upper bolts	**21 N.m**

IMPORTANT

The circuits are designed to be pressurised, so be careful at high temperatures (risk of serious burns).

Do not remove the cap from the expansion bottle while the engine is hot.

Take care when carrying out a repair under the bonnet, as the radiator fan(s) may start to operate without warning.

Do not open the bleed screw(s) with the engine running.

IMPORTANT

Wear leaktight gloves (Nitrile type) for this operation.

WARNING

Prepare for the flow of fluid, and protect the surrounding components.

REMOVAL

REMOVAL PREPARATION OPERATION

❏ Position the vehicle on a two-post lift (see **Vehicle: Towing and lifting**) (02A, Lifting equipment).

❏ Disconnect the battery (see **Battery: Removal - Refitting**) (80A, Battery).

❏ Remove:

- the engine cover,
- the front bumper (see **Front bumper: Removal - Refitting**) (55A, Exterior protection).

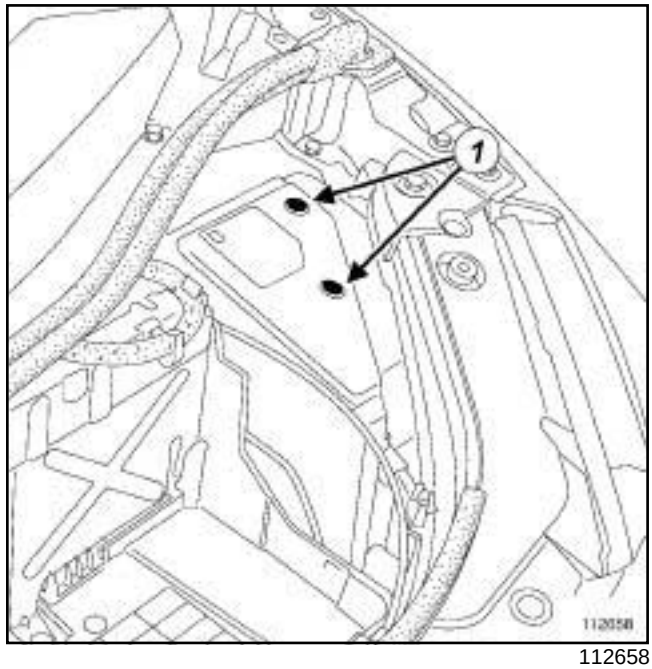

112658

❏ Remove:

- the engine accessories unit cover bolts (**1**) ,
- the engine accessories unit cover.

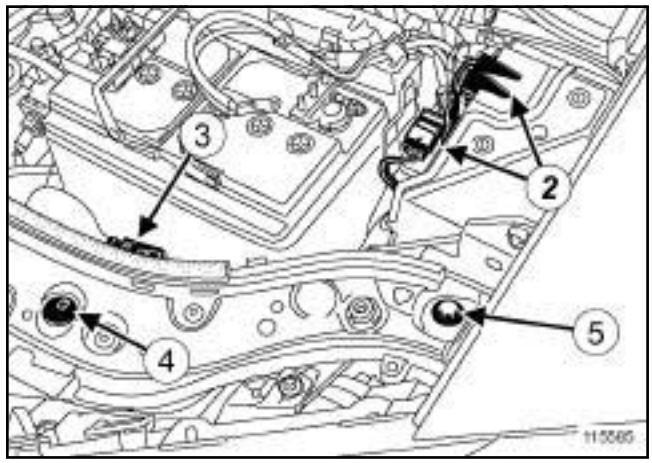

115585

❏ Disconnect the engine accessories unit front end panel connectors (**2**) .

❏ Unfasten the bonnet opening cable (**3**) .

❏ Remove:

- the front end panel clips (**4**) ,
- the front end panel upper bolts (**5**) .

❏ Disconnect the screen washer pipes.

B84 or C84 or E84 or K84 or L84, and M9R

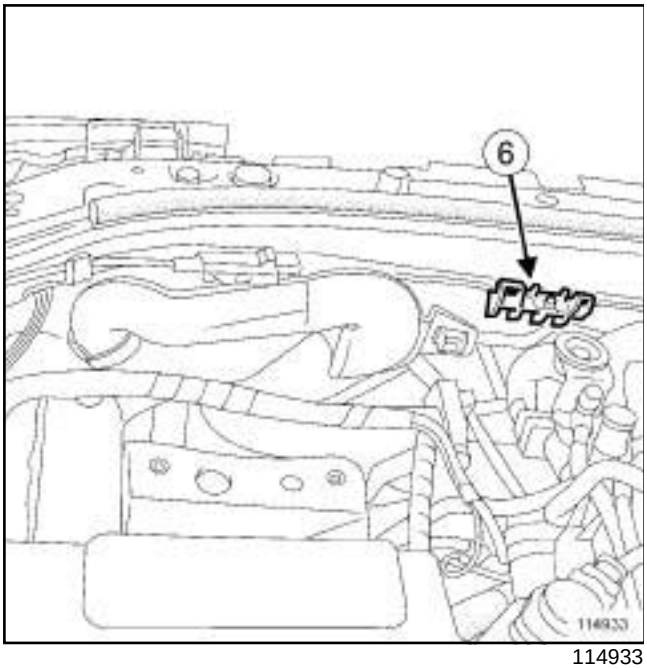

114933

❑ Unclip the air inlet scoop (**6**) .

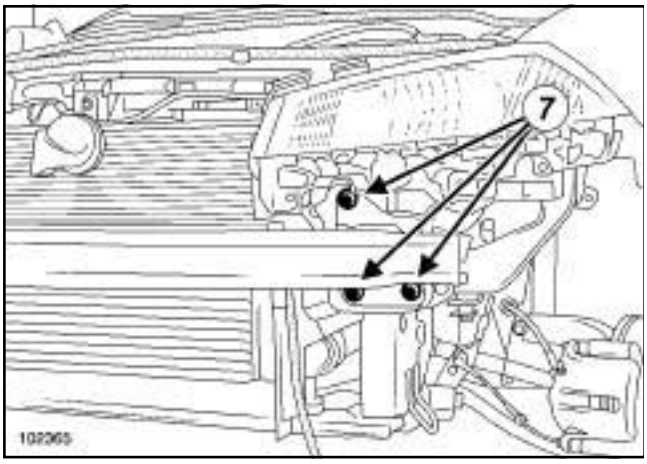

102365

❑ Remove:

- the front end panel lower bolts (**7**) ,
- the front panel,
- the air inlet scoop.

❑ Drain the engine cooling system (see **19A**, **Cooling**, **Cooling circuit: Draining - Refilling**, page **19A-15**) .

❑ Remove:

- the intercooler (see **12B**, **Turbocharging**, **Intercooler: Removal - Refitting**, page **12B-69**) ,
- the « cooling radiator - cooling fan » assembly (see **19A**, **Cooling**, **Cooling radiator: Removal - Refitting**, page **19A-22**) .

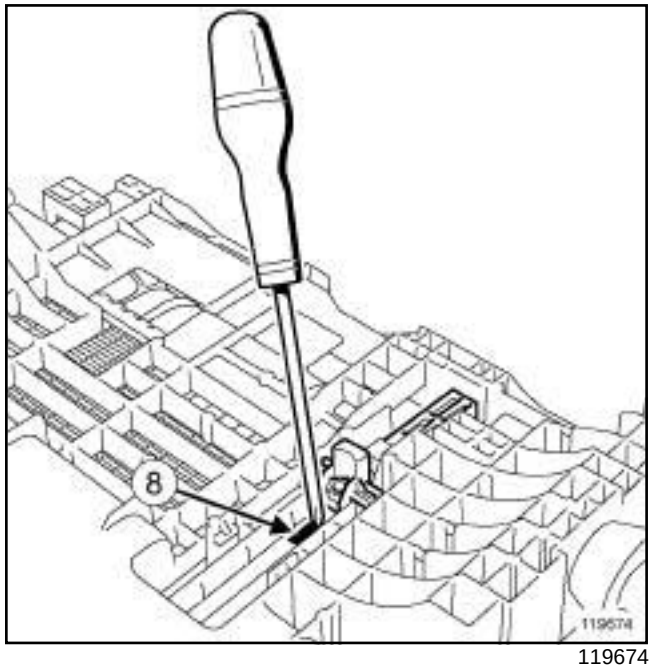

119674

❑ Press on the locking tabs (**8**) lightly using a screwdriver.

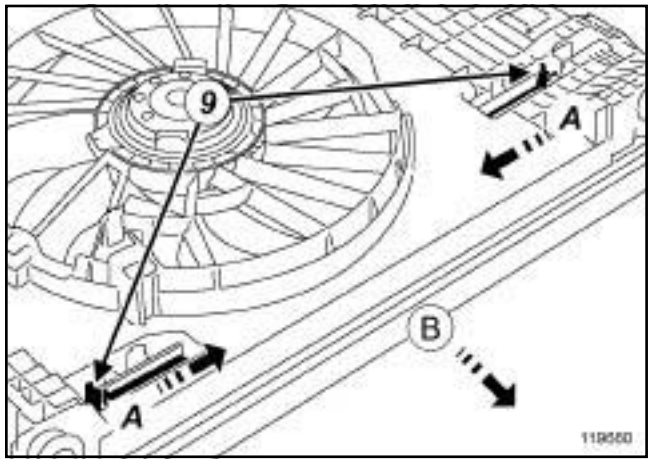

119680

❑ Slide the locking slides (**9**) in the direction of the arrows (**A**) .

❑ Remove the cooling radiator fan assembly by sliding the fan assembly in the direction of the arrow (**B**) .

REFITTING

I - REFITTING OPERATION FOR PART CONCERNED

❑ Refit the engine cooling fan assembly to the cooling radiator.

❑ Slide the locking slides.

B84 or C84 or E84 or K84 or L84, and M9R

- Check that the slides are locked properly by checking the condition and position of the tabs.

> Note:
>
> The slides can only be moved if the tabs are pressed.

II - FINAL OPERATION

- Refit:
  - the « cooling radiator - cooling fan » assembly (see **19A**, **Cooling**, **Cooling radiator: Removal - Refitting**, page **19A-22**) ,
  - the intercooler (see **12B**, **Turbocharging**, **Intercooler: Removal - Refitting**, page **12B-69**) ,
  - the air inlet scoop,
  - the front of the vehicle.
- Fit without tightening:
  - the front end panel upper bolts,
  - the front end panel lower bolts.
- Torque tighten:
  - the **front end panel lower bolts (44 N.m)**,
  - the **front end panel upper bolts (21 N.m)**.
- Clip the bonnet opening cable.
- Clip on the air inlet scoop.
- Connect the screen washer pipes.
- Refit the front end panel clips.
- Connect the engine accessories unit connectors.
- Refit:
  - the engine accessories unit cover,
  - the engine accessories unit cover bolts,
  - the front bumper (see **Front bumper: Removal - Refitting**) (55A, Exterior protection).
- Connect the battery (see **Battery: Removal - Refitting**) (80A, Battery).
- Perform the following operations:
  - fill and bleed the cooling circuit (see **19A**, **Cooling**, **Cooling circuit: Draining - Refilling**, page **19A-15**) ,
  - adjust the headlights (see **Halogen headlight: Adjustment**) (80B, Headlights) or (see **Xenon headlights: Adjustment**) (80C, Xenon bulbs).
- Refit the engine cover.

B84 or C84 or E84 or K84 or L84, and K9K, and AIR CONDITIONING or CLIMATE CONTROL

IMPORTANT

The circuits are designed to be pressurised, so be careful at high temperatures (risk of serious burns).

Do not remove the cap from the expansion bottle while the engine is hot.

Take care when carrying out a repair under the bonnet, as the radiator fan(s) may start to operate without warning.

Do not open the bleed screw(s) with the engine running.

REMOVAL

I - REMOVAL PREPARATION OPERATION

❏ Position the vehicle on a two-post lift (see **Vehicle: Towing and lifting**) (MR 364, 02A, Lifting equipment).

❏ Disconnect the battery (see **Battery: Removal - Refitting**) (MR 364, 80A, Battery).

❏ Remove:

- the engine covers,
- the front bumper (see **Front bumper: Removal - Refitting**) (MR 365, 55A, Exterior protection).

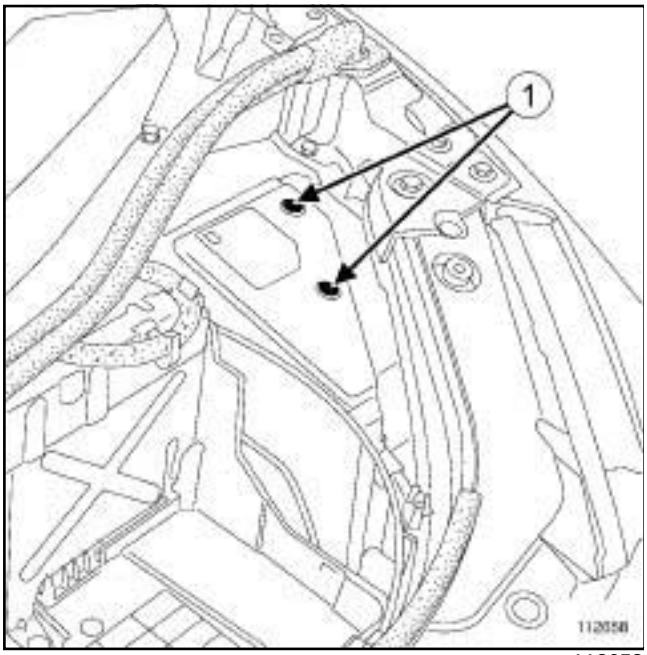

112658

❏ Remove:

- the engine accessories unit cover bolts (**1**) ,
- the engine accessories unit cover.

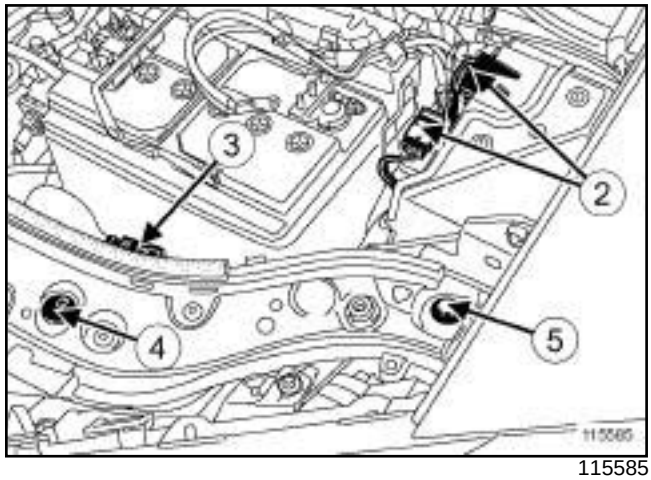

115585

❏ Disconnect the connectors (**2**) from the engine accessories unit.

❏ Unfasten the bonnet opening cable (**3**) .

❏ Remove:

- the clips (**4**) ,
- the front end panel upper bolts (**5**) .

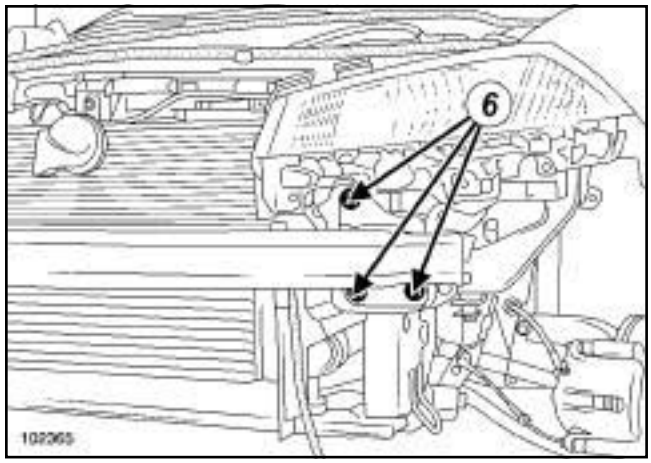

102365

❏ Remove:

- the front end panel lower bolts (**6**) ,
- the front of the vehicle.

❏ Drain the cooling system (see **19A**, **Cooling**, **Cooling circuit: Draining - Refilling**, page **19A-15**) .

❏ Remove:

- the intercooler,
- the « cooling radiator - cooling fan » assembly (see **19A**, **Cooling**, **Cooling radiator: Removal - Refitting**, page **19A-22**) .

B84 or C84 or E84 or K84 or L84, and K9K, and AIR CONDITIONING or CLIMATE CONTROL

II - OPERATION FOR REMOVAL OF PART CONCERNED

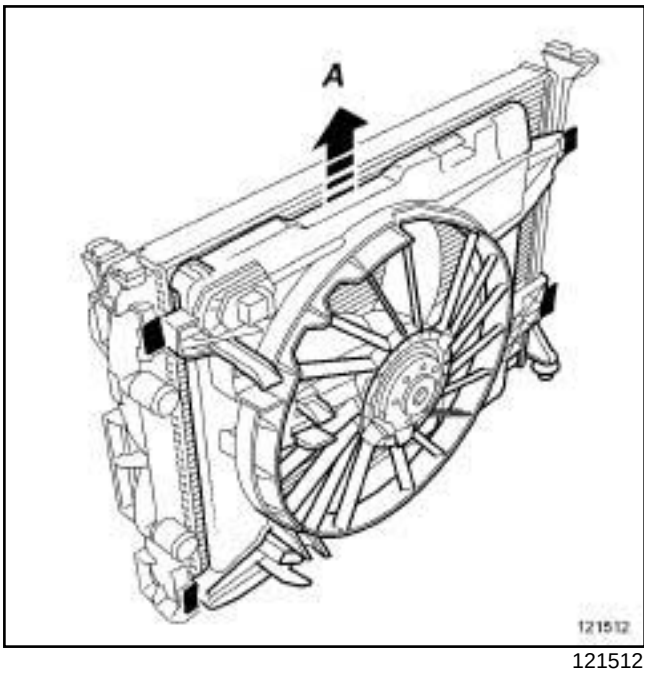

121512

❑ Remove the cooling radiator fan assembly by sliding the fan assembly in the direction of the arrow (**A**) .

REFITTING

I - REFITTING OPERATION FOR PART CONCERNED

❑ Refit the engine cooling fan assembly to the cooling radiator.

II - FINAL OPERATION

❑ Refit:

- the « cooling radiator - cooling fan » assembly (see **19A**, **Cooling**, **Cooling radiator: Removal - Refitting**, page **19A-22**) .
- the intercooler,
- the front panel,
- the lower bolts from the front end panel,
- the front end panel upper bolts,
- the clips.

❑ Connect the engine accessories unit connectors.

❑ Refit:

- the engine accessories unit cover,
- the engine accessories unit cover bolts.

❑ Clip the bonnet opening cable.

❑ Refit the front bumper (see **Front bumper: Removal - Refitting**) (MR 364, 55A, Exterior protection).

❑ Connect the battery (see **Battery : Removal - Refitting**) (MR 364, 80A, Battery).

❑ Perform the following operations:

- fill the cooling system (see **19A**, **Cooling**, **Cooling circuit: Draining - Refilling**, page **19A-15**) ,
- bleed the cooling system (see **19A**, **Cooling**, **Cooling circuit: Draining - Refilling**, page **19A-15**) .

❑ Refit the engine covers.

K9K, and 734 – B84 or C84 or E84 or K84, and M9R, and 722 or 724

Essential special tooling	
Ms. 583	Hose clamp pliers.
Mot. 1202-01	Pliers for large hose clips.
Mot. 1202-02	Pliers for small hose clips.
Mot. 1448	Long nose pliers for hose clips.

IMPORTANT

Wear leaktight gloves (Nitrile type) for this operation.

WARNING

Prepare for the flow of fluid, and protect the surrounding components.

REMOVAL

I - REMOVAL PREPARATION OPERATION

❏ Position the vehicle on a two-post lift (see **Vehicle: Towing and lifting**) (02A, Lifting equipment).

❏ Disconnect the battery (see **Battery: Removal - Refitting**) (80A, Battery).

❏ Remove:

- the front left-hand wheel (see **Wheel: Removal - Refitting**) (35A, Wheels and tyres),
- the front section of the front left-hand wheel arch liner (see **Front wheel arch liner: Removal - Refitting**) (55A, Exterior protection).

II - OPERATION FOR REMOVAL OF PART CONCERNED

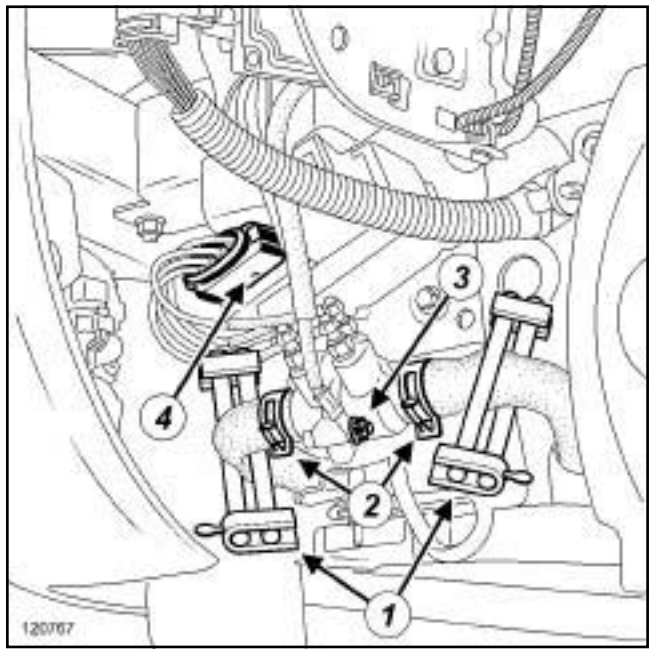

120767

❏ Fit the tool **(Ms. 583)** (**1**) on the engine cooling hoses.

❏ Separate the clip (**2**) on the engine cooling hoses using the tool **(Mot. 1202-01)** or **(Mot. 1202-02)** or **(Mot. 1448)**.

❏ Disconnect the engine cooling hoses.

❏ Remove the nut (**3**) from the earth strap.

❏ Move the earth strap to one side.

❏ Disconnect the connector (**4**) from the thermoplunger unit.

K9K, and 734 – B84 or C84 or E84 or K84, and M9R, and 722 or 724

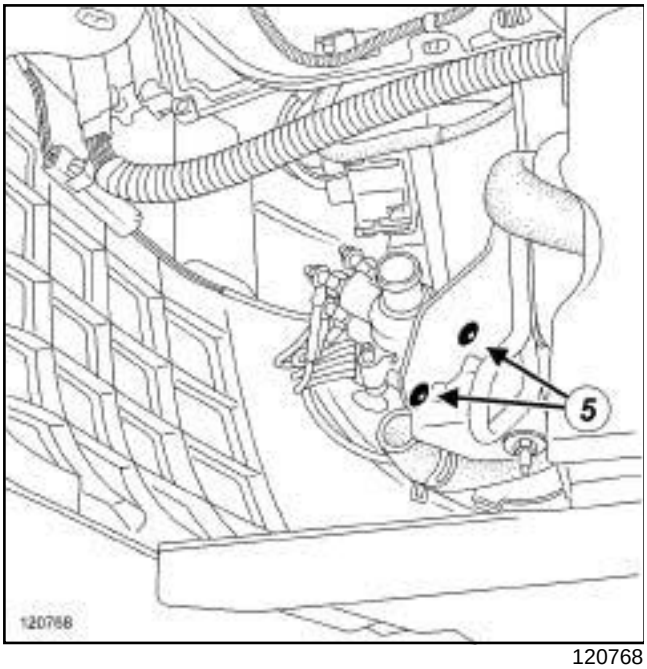

120768

❑ Remove:

- the thermoplunger unit bolts (**5**) ,
- the thermoplunger unit.

REFITTING

I - REFITTING PREPARATION OPERATION

If replacing the thermoplunger unit

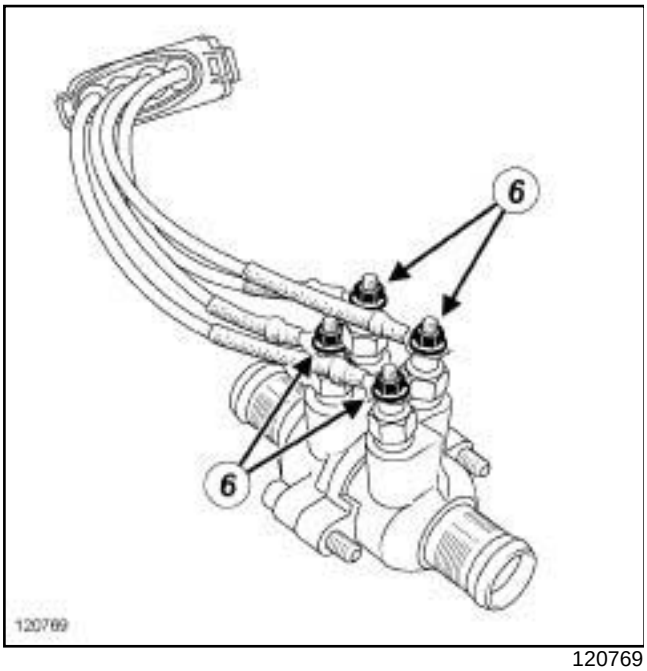

120769

❑ Remove the nuts (**6**) from the thermoplungers.

❑ Move the thermoplunger wiring harness to one side.

❑ Fit the wiring harness on the new thermoplungers.

❑ Refit the nuts on the new thermoplungers.

❑ Tighten the thermoplunger nuts.

> **WARNING**
> Before bleeding the cooling system, it is essential to deactivate the thermoplungers to avoid irreparably damaging them.

II - REFITTING OPERATION FOR PART CONCERNED

❑ Refit:

- the thermoplunger unit,
- the thermoplunger unit bolts.

❑ Tighten the thermoplunger unit bolts.

❑ Position the earth strap.

❑ Refit the earth strap nut.

❑ Tighten the earth strap nut.

❑ Connect the engine cooling hoses.

❑ Fit the clip on the engine cooling hoses using the tool **(Mot. 1202-01)** or **(Mot. 1202-02)** or **(Mot. 1448)**.

❑ Remove the tool **(Ms. 583)** from the engine cooling hoses.

III - FINAL OPERATION

❑ Connect the battery (see **Battery : Removal - Refitting**) (80A, Battery).

❑ Fill and bleed the cooling system (see **19A**, **Cooling**, **Cooling circuit: Draining - Refilling**, page **19A-15**) .

❑ Connect the thermoplunger unit connector.

❑ Refit:

- the front section of the front left-hand wheel arch liner (see **Front wheel arch liner: Removal - Refitting**) (55A, Exterior protection),
- the front left-hand wheel (see **Wheel: Removal - Refitting**) (35A, Wheels and tyres).

B84 or C84 or E84 or K84 or L84, and M9R

Essential special tooling	
Mot. 1448	Long nose pliers for hose clips.

Tightening torques ▽	
coolant pump inlet pipe bolt	**10 Nm**
front end panel lower bolts	**44 Nm**
front end panel upper bolts	**21 Nm**

IMPORTANT

The circuits are designed to be pressurised, so be careful at high temperatures (risk of serious burns).

Do not remove the cap from the expansion bottle while the engine is hot.

Take care when carrying out a repair under the bonnet, as the radiator fan(s) may start to operate without warning.

Do not open the bleed screw(s) with the engine running.

REMOVAL

I - REMOVAL PREPARATION OPERATION

❑ Position the vehicle on a two-post lift (see **Vehicle: Towing and lifting**) (MR 364, 02A, Lifting equipment).

❑ Remove the front engine cover.

❑ Disconnect the battery (see **Battery: Removal - Refitting**) (MR 364, 80A, Battery).

❑ Remove:

- the engine undertray bolts,
- the engine undertray,
- the front bumper (see **Front bumper: Removal - Refitting**) (MR 365, 55A, Exterior protection).

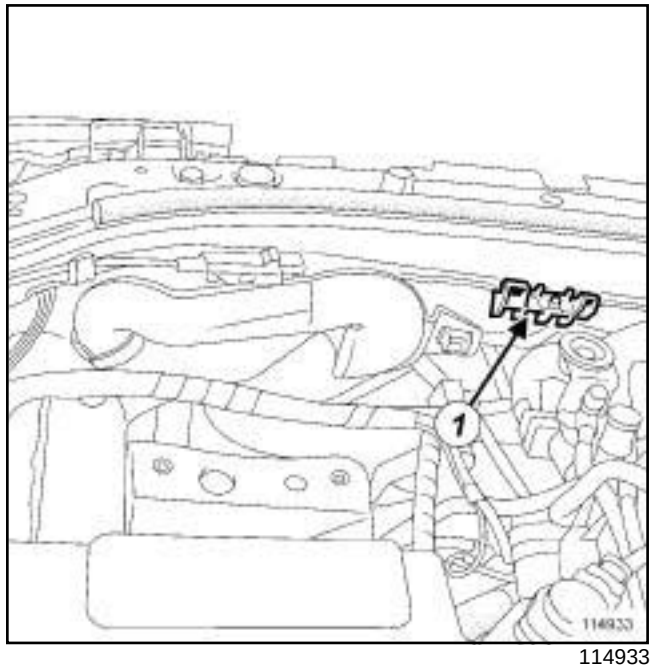

114933

❑ Unclip the air inlet scoop (**1**) .

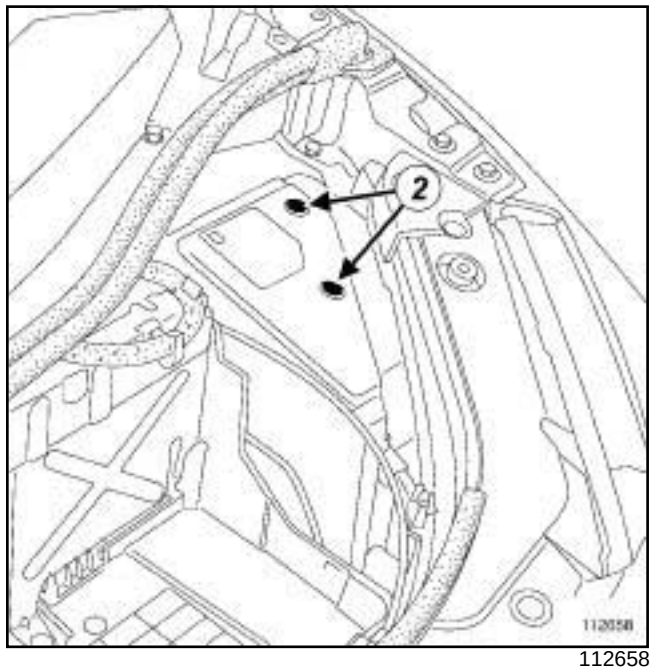

112658

❑ Remove:

- the engine accessories unit cover bolts (**2**) ,
- the engine accessories unit cover.

B84 or C84 or E84 or K84 or L84, and M9R

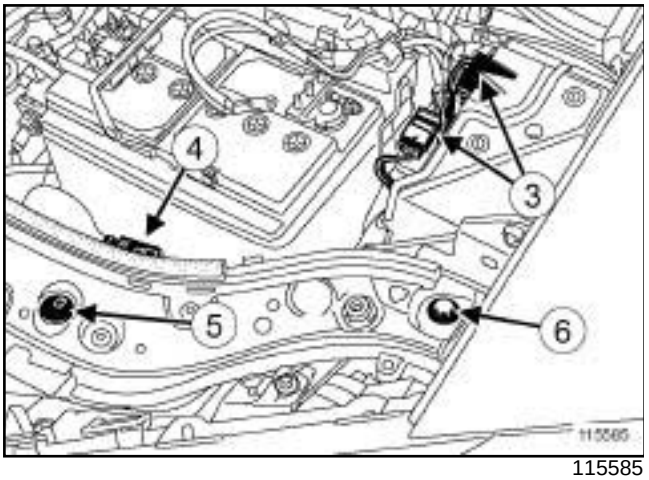

115585

❑ Disconnect the connectors (**3**) from the engine accessories unit.

❑ Detach the bonnet release cable (**4**) .

❑ Remove:

- the front end panel clips (**5**) ,
- the front end panel upper bolts (**6**) .

❑ Disconnect the screen washer pipes.

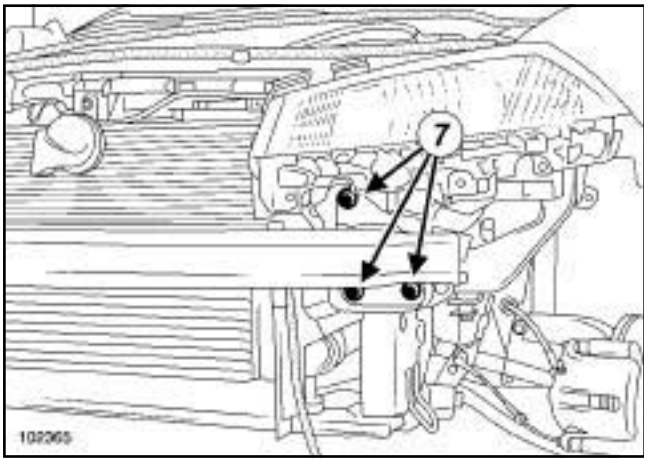

102365

❑ Remove:

- the front end panel lower bolts (**7**) ,
- the front end panel.

❑ Drain the engine cooling system (see **19A**, **Cooling**, **Cooling circuit: Draining - Refilling**, page **19A-15**) .

❑ Clean the cooling system (see **19A**, **Cooling**, **Cooling circuit: Draining - Refilling**, page **19A-15**) .

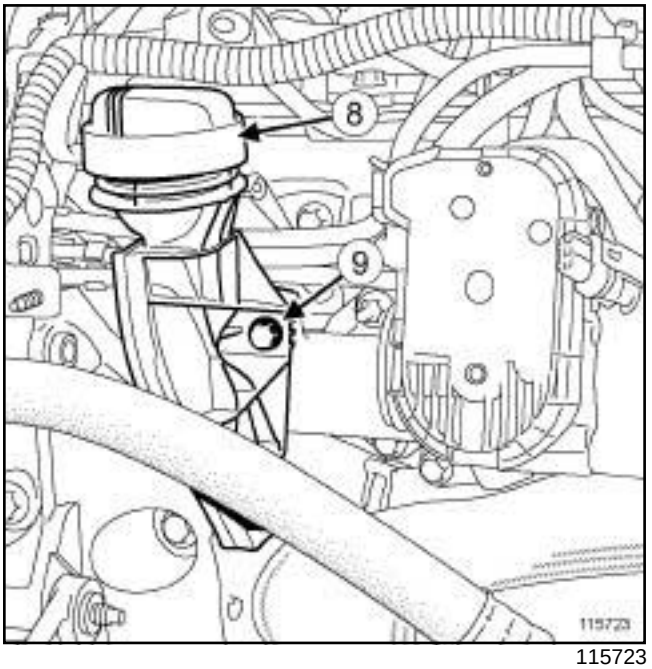

115723

❑ Remove:

- the « oil filler cap - dipstick » assembly (**8**) .
- the dipstick guide tube bolt (**9**) ,
- the dipstick guide tube.

❑ Remove:

- the EGR rigid pipe between the damper valve and the EGR cooler (see **14A**, **Antipollution**, **Exhaust gas recirculation rigid pipe: Removal - Refitting**, page **14A-95**) ,
- the exhaust gas intercooler (see **14A**, **Antipollution**, **Intercooler: Removal - Refitting**, page **14A-43**) .

B84 or C84 or E84 or K84 or L84, and M9R

II - OPERATION FOR REMOVAL OF PART CONCERNED

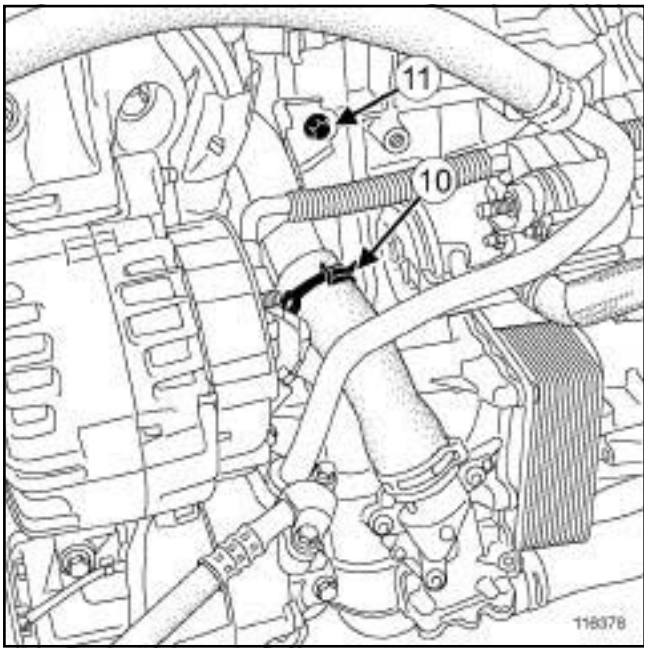

116378

- ❑ Move aside the clip (**10**) from the oil filter unit coolant outlet hose using theoror **(Mot. 1448)**.
- ❑ Remove the bolt (**11**) from the coolant pump inlet pipe.
- ❑ Move the coolant pump inlet pipe to one side.

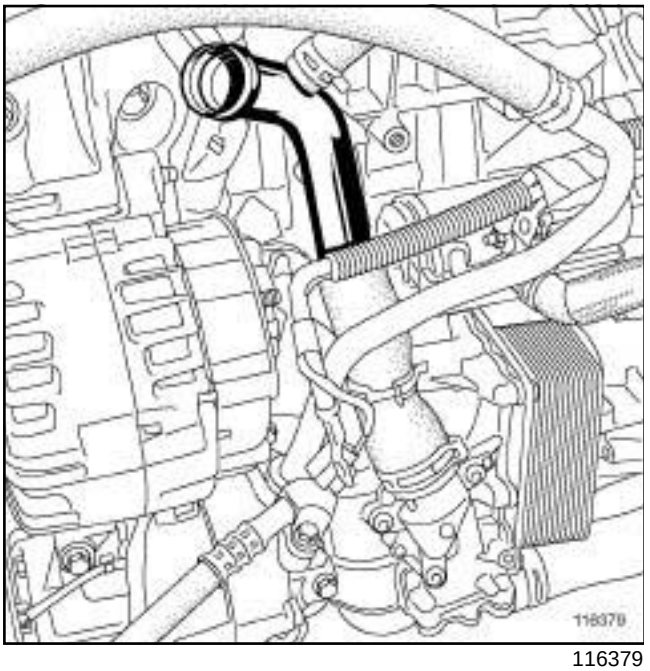

116379

- ❑ Disconnect the coolant pump inlet pipe from the oil filter unit coolant outlet hose.

REFITTING

I - REFITTING PREPARATIONS OPERATION

- ❑ Move aside the EGR cooler coolant outlet hose using theoror **(Mot. 1448)** if replacing the coolant pump inlet pipe.
- ❑ Disconnect the EGR cooler coolant outlet hose if replacing the coolant pump inlet pipe.
- ❑ Connect the EGR cooler coolant outlet hose to the new coolant pump inlet pipe.
- ❑ Fit the EGR cooler coolant outlet hose clip on the new coolant pump inlet pipe using theoror **(Mot. 1448)**.
- ❑ Clean:
  - the coolant pump inlet pipe seal housing if it is being reused,
  - the cylinder block gasket face.

> **WARNING**
> The face and the housing of the seal must be clean, dry and free from grease (avoid finger marks).

II - REFITTING OPERATION FOR PART CONCERNED

- ❑ Fit a new seal into the coolant pump housing.
- ❑ Connect the coolant pump inlet pipe in the oil filter unit coolant outlet hose.
- ❑ Apply soapy water to the seal.
- ❑ Position the coolant pump inlet pipe.
- ❑ Refit the coolant pump inlet pipe bolt.
- ❑ Torque tighten the **coolant pump inlet pipe bolt (10 Nm)**.
- ❑ Fit the clip to the oil filter unit coolant outlet hose using theoror **(Mot. 1448)**.

III - FINAL OPERATION.

- ❑ Refit:
  - the intercooler (see **14A**, **Antipollution**, **Intercooler: Removal - Refitting**, page **14A-43**) ,
  - the EGR rigid pipe between the damper valve and the EGR cooler (see **14A**, **Antipollution**, **Exhaust gas recirculation rigid pipe: Removal - Refitting**, page **14A-95**) ,
  - the dipstick guide,

B84 or C84 or E84 or K84 or L84, and M9R

- the dipstick guide tube bolt,
- the « oil filler cap - dipstick » assembly.
- the front end panel,
- the front end panel lower bolts,
- the front end panel upper bolts,
- the front end panel clips.

❏ Torque tighten:

- the **front end panel lower bolts (44 Nm)**,
- the **front end panel upper bolts (21 Nm)**.

❏ Connect the screen washer pipes.

❏ Clip on the bonnet release cable.

❏ Connect the engine accessories unit connectors.

❏ Refit:

- the engine accessories unit cover,
- the engine accessories unit cover bolts,
- the front bumper (see **Front bumper: Removal - Refitting**) (MR 365, 55A, Exterior protection),
- the engine undertray,
- the engine undertray bolts.

❏ Clip on the air inlet scoop.

❏ Connect the battery (see **Battery: Removal - Refitting**) (MR 364, 80A, Battery).

❏ Refit the engine cover.

❏ Perform the following operations:

- fill the cooling system (see **19A**, **Cooling**, **Cooling circuit: Draining - Refilling**, page **19A-15**) ,
- bleed the cooling circuit (see **19A**, **Cooling**, **Cooling circuit: Draining - Refilling**, page **19A-15**) ,
- adjust the headlights (see **Halogen headlight: Adjustment**) (MR 364, 80B, Headlights) or (see **Xenon headlights: Adjustment**) (MR 364, 80C, Xenon bulbs).

B84 or C84 or E84 or K84 or L84, and M9R

Essential special tooling	
Mot. 1448	Long nose pliers for hose clips.

Tightening torques ▽	
front end panel lower bolts	**44 Nm**
front end panel upper bolts	**21 Nm**

IMPORTANT

The circuits are designed to be pressurised, so be careful at high temperatures (risk of serious burns).

Do not remove the cap from the expansion bottle while the engine is hot.

Take care when carrying out a repair under the bonnet, as the radiator fan(s) may start to operate without warning.

Do not open the bleed screw(s) with the engine running.

REMOVAL

I - REMOVAL PREPARATION OPERATION

❑ Position the vehicle on a two-post lift (see **Vehicle: Towing and lifting**) (MR 364, 02A, Lifting equipment).

❑ Disconnect the battery (see **Battery: Removal - Refitting**) (MR 364, 80A, Battery).

❑ Remove:

- the engine cover,
- the front bumper (see **Front bumper: Removal - Refitting**) (MR 365, 55A, Exterior protection).

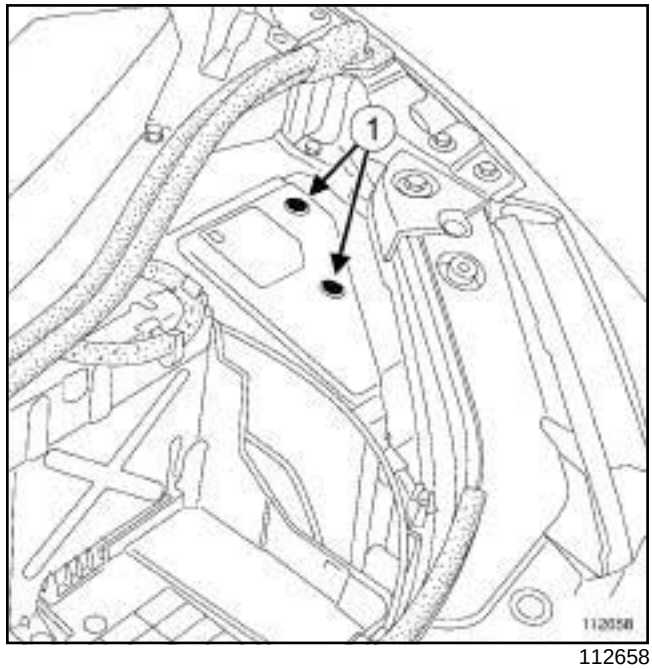

112658

❑ Remove:

- the engine accessories unit cover bolts (**1**) ,
- the engine accessories unit cover.

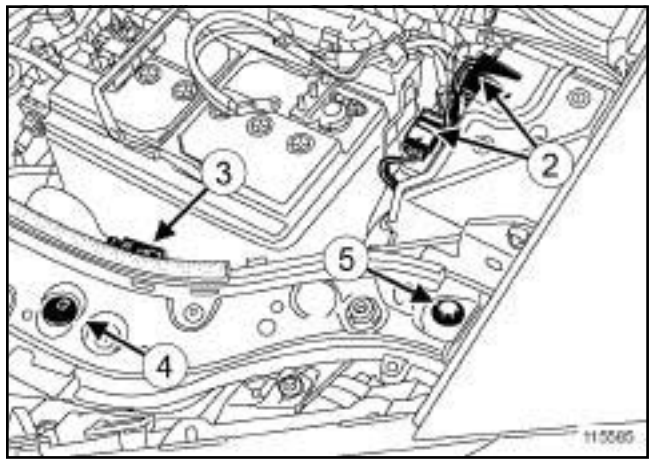

115585

❑ Disconnect the connectors (**2**) from the engine accessories unit.

❑ Detach the bonnet release cable (**3**) .

❑ Remove:

- the clips (**4**) ,
- the front end panel upper bolts (**5**) .

B84 or C84 or E84 or K84 or L84, and M9R

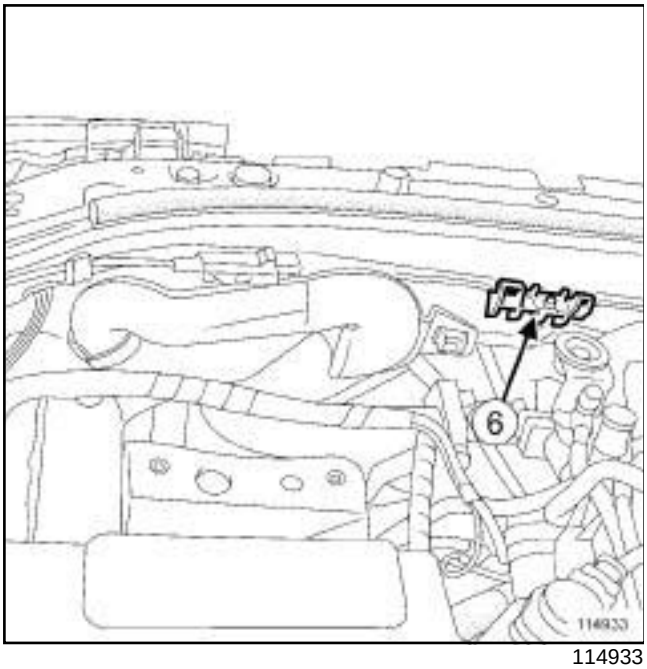

114933

❏ Unclip the air inlet scoop (**6**) .

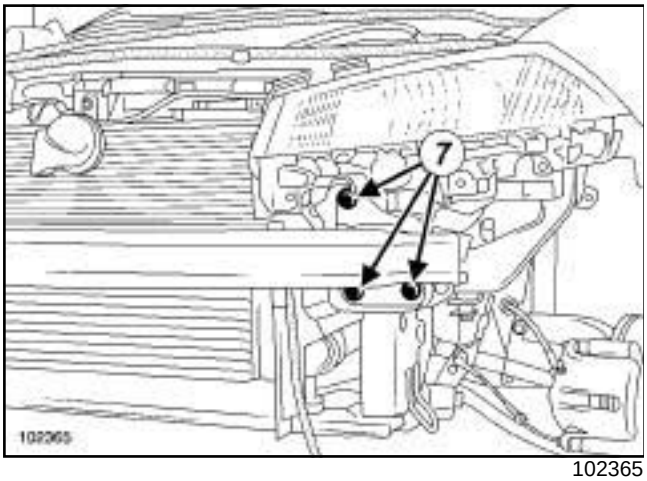

102365

❏ Remove:

- the front end panel lower bolts (**7**) ,
- the front end panel.

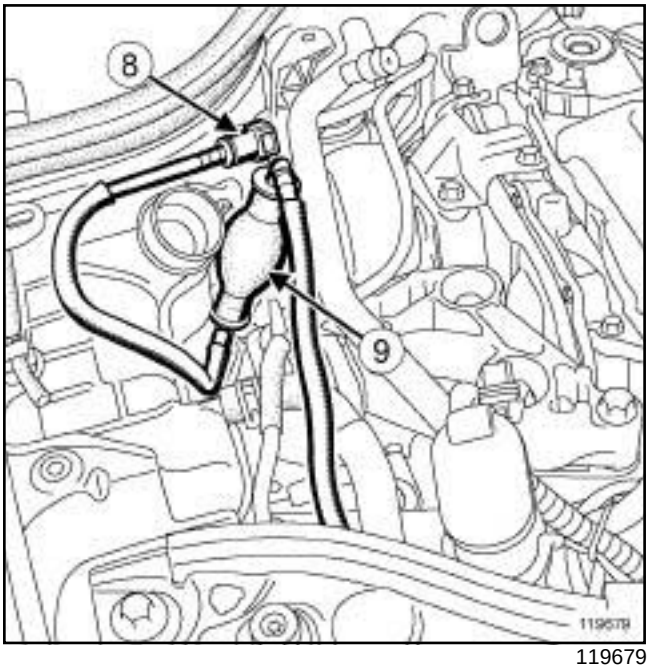

119679

❏ Disconnect the manual priming pump union (**8**) from the fuel inlet duct.

❏ Fit anti-contamination caps.

❏ Unclip the manual priming pump (**9**) .

❏ Move aside the manual priming pump.

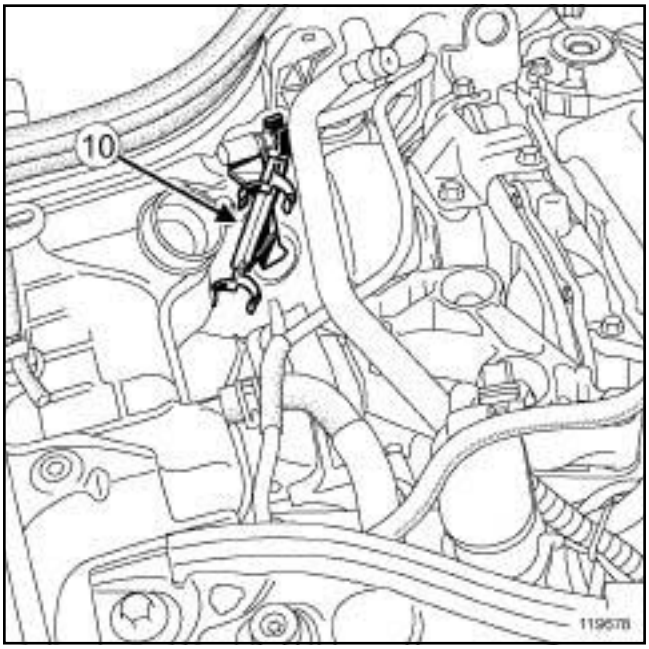

119678

❏ Unclip the manual priming pump support (**10**) .

B84 or C84 or E84 or K84 or L84, and M9R

II - OPERATION FOR REMOVAL OF PART CONCERNED

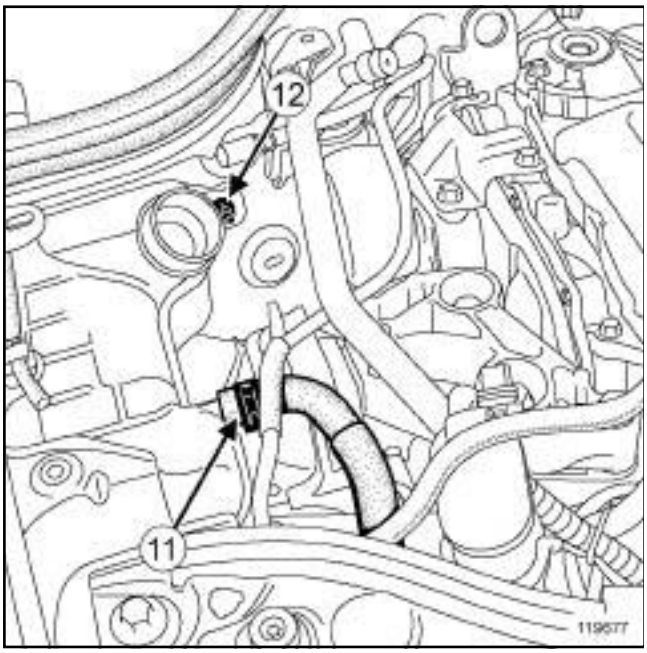

119677

- ❑ Fit the hose clamp on the top hose of the expansion bottle.
- ❑ Open the clip (**11**) on the expansion bottle top hose using the **(Mot. 1448)**.
- ❑ Remove the nut (**12**) from the expansion bottle.

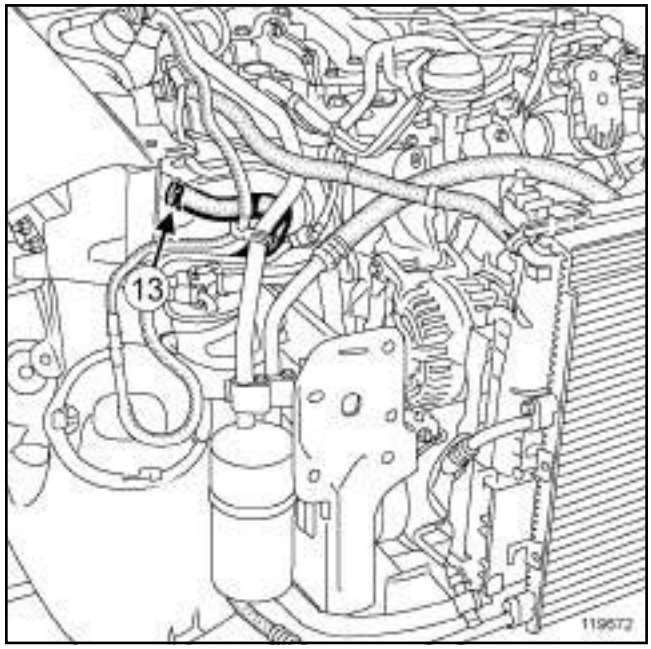

119672

- ❑ Fit the hose clamp on the bottom hose of the expansion bottle.
- ❑ Open the clip (**13**) on the expansion bottle bottom hose using the **(Mot. 1448)**.
- ❑ Draw out the coolant in the expansion bottle.
- ❑ Disconnect:

  - the expansion bottle's top hose,

  - the bottom hose from the expansion bottle.
- ❑ Remove the expansion bottle.

REFITTING

I - REFITTING OPERATION FOR PART CONCERNED

- ❑ Refit:

  - the expansion bottle,

  - the expansion bottle nut.
- ❑ Connect the expansion bottle top hose.
- ❑ Fit the expansion bottle top hose clip using the **(Mot. 1448)**.
- ❑ Connect the expansion bottle bottom hose.
- ❑ Fit the expansion bottle bottom hose clip using the **(Mot. 1448)**.
- ❑ Remove the hose clamps.

B84 or C84 or E84 or K84 or L84, and M9R

II - FINAL OPERATION.

- ❑ Clip on the manual priming pump support.
- ❑ Clip on the manual priming pump.
- ❑ Remove the blanking plugs.
- ❑ Connect the manual priming pump union to the fuel inlet duct.
- ❑ Prime the fuel circuit using the manual priming pump.
- ❑ Refit:
  - the front end panel,
  - the front end panel lower bolts,
  - the front end panel upper bolts,
  - the clips.
- ❑ Torque tighten:
  - the **front end panel lower bolts (44 Nm)**,
  - the **front end panel upper bolts (21 Nm)**.
- ❑ Connect the engine accessories unit connectors.
- ❑ Refit:
  - the engine accessories unit cover,
  - the engine accessories unit cover bolts.
- ❑ Clip on the bonnet release cable.
- ❑ Clip on the air inlet scoop.
- ❑ Refit:
  - the front bumper (see **Front bumper: Removal - Refitting**) (MR 365, 55A, Exterior protection),
  - the engine cover.
- ❑ Connect the battery (see **Battery: Removal - Refitting**) (MR 364, 80A, Battery).
- ❑ Make sure the coolant fluid level is at the « Maximum » mark.
- ❑ Bleed the cooling system (see **19A**, **Cooling**, **Cooling circuit: Draining - Refilling**, page **19A-15**) .

F9Q

Essential special tooling	
Ms. 583	Hose clamp pliers.
Mot. 1448	Long nose pliers for hose clips.

IMPORTANT

The circuits are designed to be pressurised, so be careful at high temperatures (risk of serious burns).

Do not remove the cap from the expansion bottle while the engine is hot.

Take care when carrying out a repair under the bonnet, as the radiator fan(s) may start to operate without warning.

Do not open the bleed screw(s) with the engine running.

REMOVAL

I - REMOVAL PREPARATION OPERATION

❏ Position the vehicle on a two-post lift (see **Vehicle: Towing and lifting**) (02A, Lifting equipment).

❏ Disconnect the battery (see **Battery: Removal - Refitting**) (80A, Battery).

❏ Remove:

- the engine covers,
- the front bumper (see **Front bumper: Removal - Refitting**) (55A, Exterior protection).

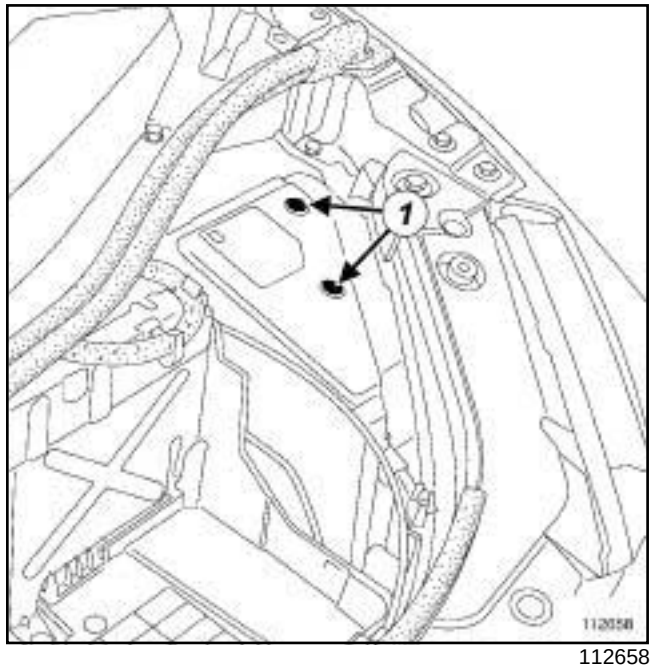

112658

❏ Remove:

- the engine accessories unit cover bolts (**1**) ,
- the engine accessories unit cover.

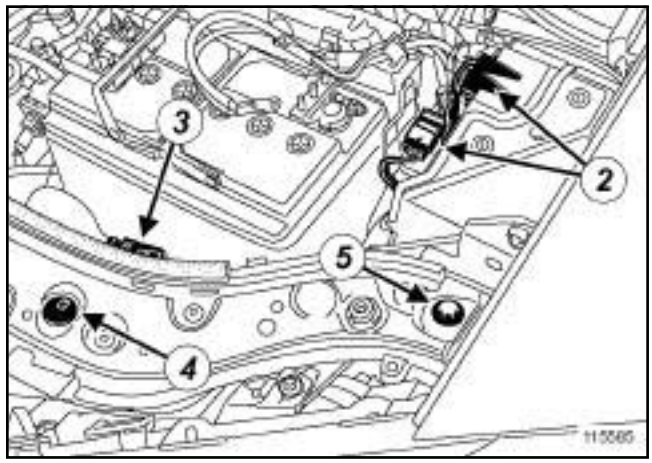

115585

❏ Disconnect the connectors (**2**) from the engine accessories unit.

❏ Unfasten the bonnet opening cable (**3**) .

❏ Remove:

- the clips (**4**) ,
- the front end panel upper bolts (**5**) .

F9Q

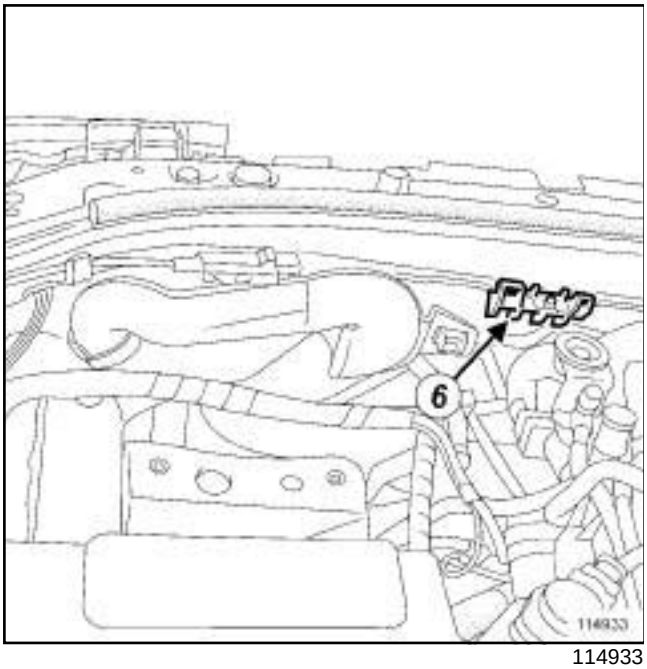

114933

❑ Unclip the air inlet scoop (**6**) .

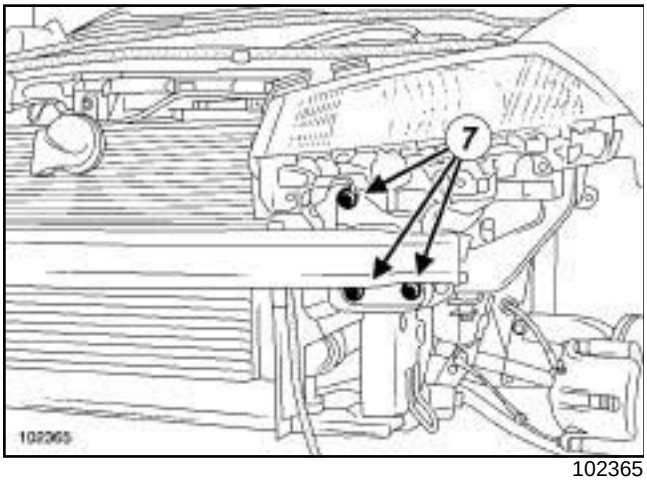

102365

❑ Remove:

- the front end panel lower bolts (**7**) ,
- the front of the vehicle.

II - OPERATION FOR REMOVAL OF PART CONCERNED

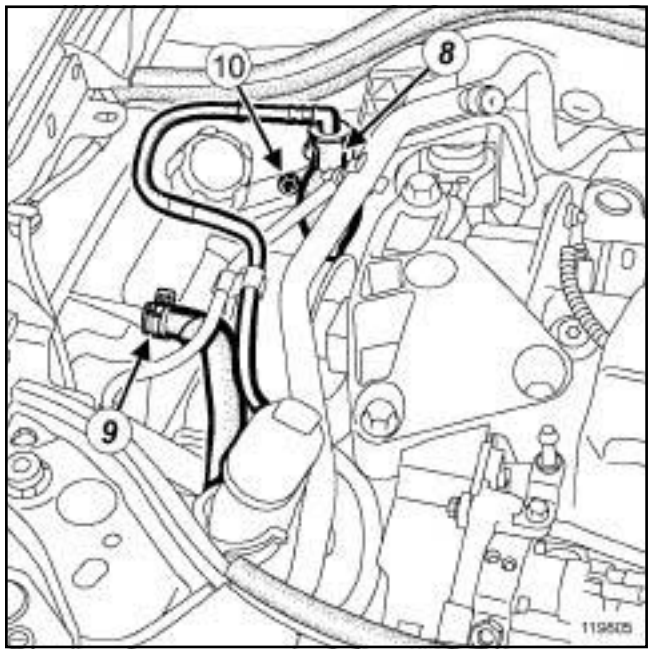

119805

❑ Unclip the manual priming pump (**8**) .

❑ Move aside the manual priming pump.

❑ Fit the tool **(Ms. 583)** on the expansion bottle hose.

❑ Separate the clip (**9**) on the expansion bottle hose using the tool **(Mot. 1448)**.

❑ Remove the nut (**10**) from the expansion bottle.

F9Q

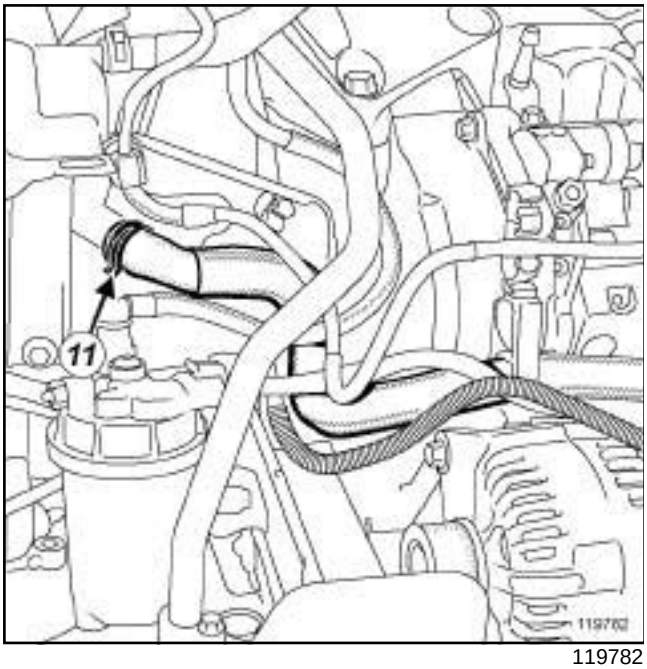

119782

- ❑ Fit the tool **(Ms. 583)** on the expansion bottle bottom hose.
- ❑ Separate the clip (**11**) from the expansion bottle bottom hose using the tool **(Mot. 1448)**.
- ❑ Draw out the coolant in the expansion bottle.
- ❑ Disconnect:
  - the expansion bottle top hose,
  - the expansion bottle bottom hose.
- ❑ Remove the expansion bottle .

REFITTING

I - REFITTING OPERATION FOR PART CONCERNED

- ❑ Refit the expansion bottle.
- ❑ Connect the expansion bottle top hose.
- ❑ Fit the clip on the expansion bottle top hose using the tool **(Mot. 1448)**.
- ❑ Connect the expansion bottle bottom hose.
- ❑ Fit the clip on the expansion bottle bottom hose using the tool **(Mot. 1448)**.
- ❑ Remove the tool **(Ms. 583)** from the expansion bottle bottom hose.

II - FINAL OPERATION

- ❑ Clip on the manual priming pump.
- ❑ Refit the front end panel.
- ❑ Connect the engine accessories unit connectors.
- ❑ Refit the engine accessories unit cover.
- ❑ Clip the bonnet opening cable.
- ❑ Clip on the air inlet scoop.
- ❑ Refit the front bumper (see **Front bumper: Removal - Refitting**) (55A, Exterior protection).
- ❑ Connect the battery (see **Battery : Removal - Refitting**) (80A, Battery).
- ❑ Fill and bleed the cooling system (see **19A**, **Cooling**, **Cooling circuit: Draining - Refilling**, page **19A-15**) .
- ❑ Refit the engine covers.

Electric water pump: Removal - Refitting

F9Q, and 804

Essential special tooling	
Ms. 583	Hose clamp pliers.
Mot. 1448	Long nose pliers for hose clips.

REMOVAL

- ❑ Position the vehicle on a two-post lift (see **02A, Lifting equipment, Underbody lift**).
- ❑ Disconnect the battery (see **Battery: Removal - Refitting**)
- ❑ Remove the engine undertray.

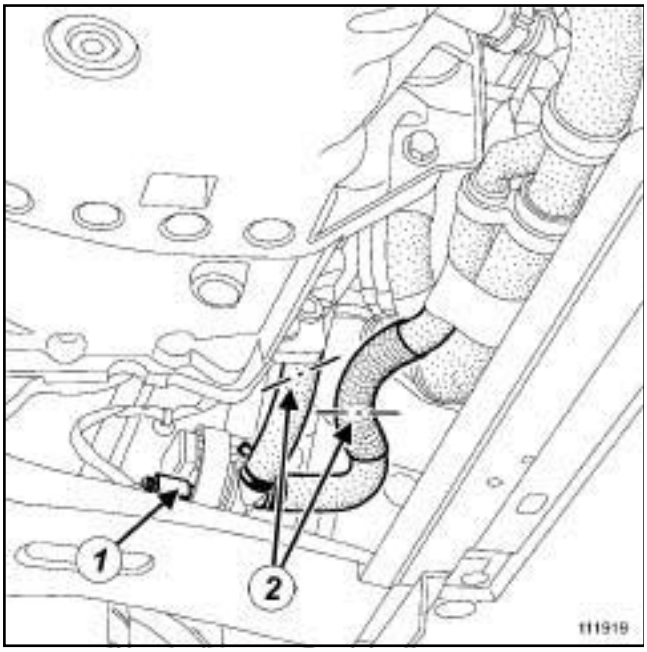

111919

- ❑ Disconnect the connector (**1**) from the electric coolant pump.
- ❑ Fit the hose clamps **(Ms. 583)** in accordance with the marks (**2**) .
- ❑ Disconnect the cooling hoses using theoror **(Mot. 1448)**.
- ❑ Remove the electric coolant pump.

REFITTING

- ❑ Refit the electric coolant pump.
- ❑ Reconnect the electric coolant pump cooling hoses using theoror **(Mot. 1448)**.
- ❑ Remove the hose clamps **(Ms. 583)**.
- ❑ Reconnect the electric water pump connector.
- ❑ Refit the engine undertray.
- ❑ Connect the battery (see **Battery : Removal - Refitting**)
- ❑ Bleed the cooling system (see **19A**, **Cooling**, **Cooling circuit: Draining - Refilling**, page **19A-15**)

B84 or C84 or E84 or K84 or L84, and M9R, and 724

Essential special tooling	
Ms. 583	Hose clamp pliers.
Mot. 1448	Long nose pliers for hose clips.

IMPORTANT

The circuits are designed to be pressurised, so be careful at high temperatures (risk of serious burns).

Do not remove the cap from the expansion bottle while the engine is hot.

Take care when carrying out a repair under the bonnet, as the radiator fan(s) may start to operate without warning.

Do not open the bleed screw(s) with the engine running.

REMOVAL

I - REMOVAL PREPARATION OPERATION

❑ Position the vehicle on a two-post lift (see **Vehicle: Towing and lifting**) (MR 364, 02A, Lifting equipment).

❑ Remove:

- the engine undertray bolts,
- the engine undertray.

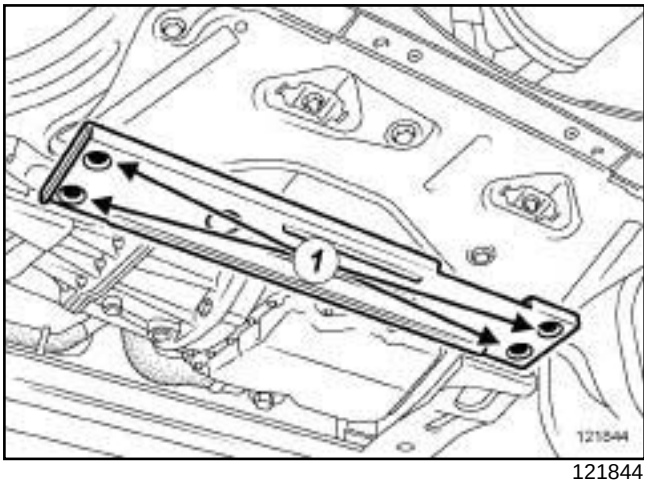

121844

❑ Remove:

- the reinforcement lower cross member nuts (**1**) ,
- the reinforcement lower cross member.

II - OPERATION FOR REMOVAL OF PART CONCERNED

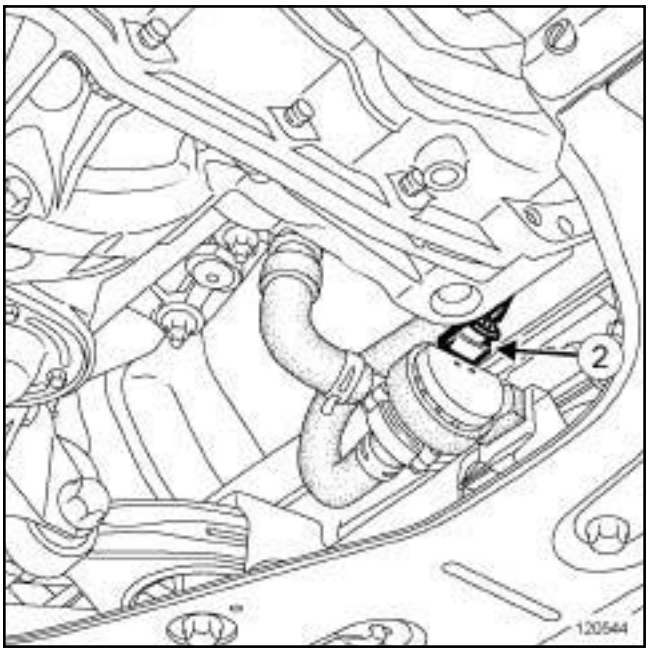

120544

❑ Disconnect the electric coolant pump (**2**) connector.

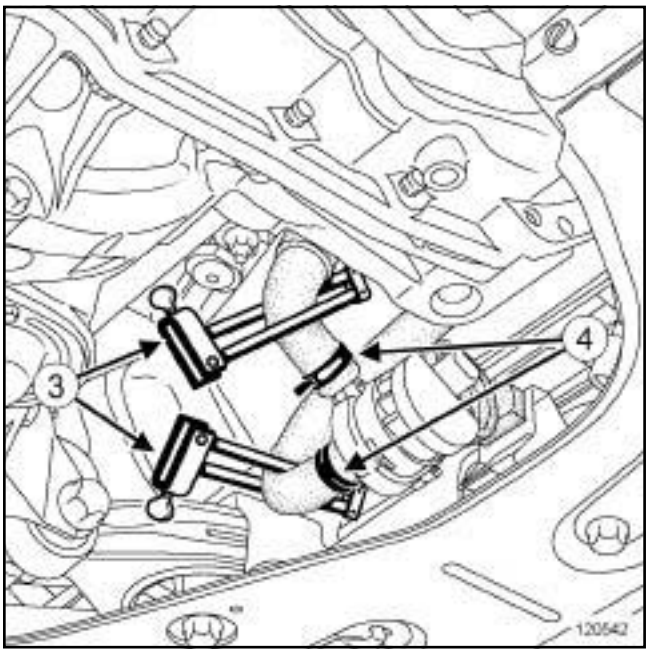

120542

❑ Fit the **(Ms. 583)** (**3**) to the electric coolant pump hoses.

❑ Remove the clips (**4**) from the hoses using the **(Mot. 1448)**.

Note:

Watch out for splashes of coolant from the electric coolant pump during this operation.

B84 or C84 or E84 or K84 or L84, and M9R, and 724

❑ Disconnect the electric coolant pump cooling hoses.

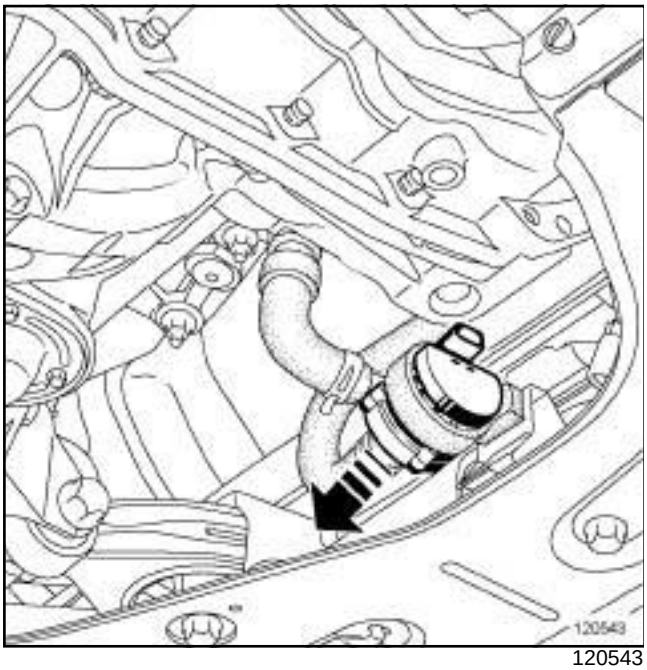

120543

❑ Detach the electric coolant pump from its rubber mounting.

❑ Remove the electric coolant pump.

REFITTING

I - REFITTING OPERATION FOR PART CONCERNED

❑ Refit the water pump.

❑ Clip the electric coolant pump onto its mounting.

❑ Connect the electric coolant pump cooling hoses.

❑ Fit the cooling radiator hose clips using the **(Mot. 1448)**.

❑ Remove the **(Ms. 583)** from the electric coolant pump cooling hoses.

❑ Connect the electric coolant pump connector.

II - FINAL OPERATION.

❑ Refit:

- the reinforcement lower cross member,
- the reinforcement lower cross member nuts.

❑ Make sure the coolant fluid level is at the « Maximum » mark.

❑ Bleed the cooling system (see **19A**, **Cooling**, **Cooling circuit: Draining - Refilling**, page **19A-15**) .

K9K, and 734

Essential special tooling	
Ms. 583	Hose clamp pliers.
Mot. 1202-01	Pliers for large hose clips.
Mot. 1202-02	Pliers for small hose clips.
Mot. 1448	Long nose pliers for hose clips.

IMPORTANT

The circuits are designed to be pressurised, so be careful at high temperatures (risk of serious burns).

Do not remove the cap from the expansion bottle while the engine is hot.

Take care when carrying out a repair under the bonnet, as the radiator fan(s) may start to operate without warning.

Do not open the bleed screw(s) with the engine running.

IMPORTANT

Wear leaktight gloves (Nitrile type) for this operation.

IMPORTANT

Wear heat protective gloves during the operation.

REMOVAL

I - REMOVAL PREPARATION OPERATION

❏ Position the vehicle on a two-post lift (see **Vehicle: Towing and lifting**) (02A, Lifting equipment).

❏ Remove:

- the engine undertray bolts,
- the engine undertray.

II - OPERATION FOR REMOVAL OF PART CONCERNED

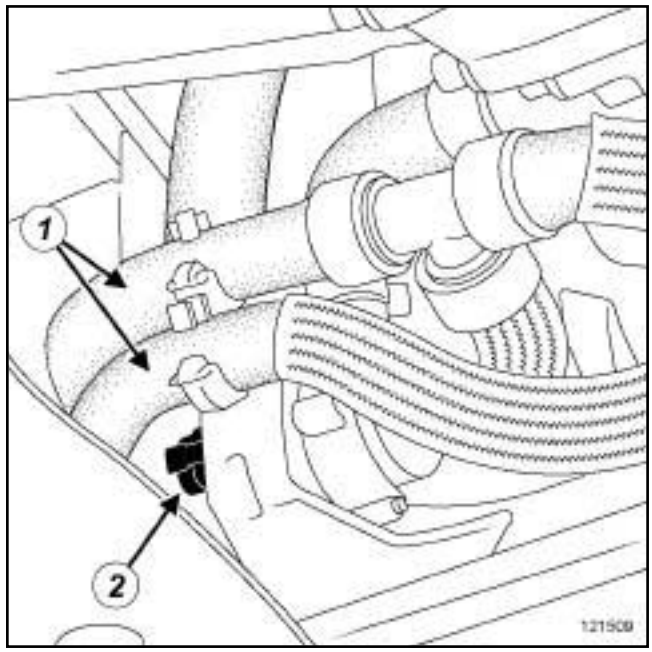

121509

❏ Unclip the cooling hoses (**1**) .

❏ Remove the electric coolant pump rubber mounting clips.

❏ Move aside the electric water pump.

❏ Disconnect the connector (**2**) from the electric coolant pump.

❏ Fit the tool **(Ms. 583)** on the electric coolant pump hoses.

❏ Separate the clips on the electric coolant pump hoses using the tool **(Mot. 1202-01)** or **(Mot. 1202-02)** or **(Mot. 1448)**.

❏ Disconnect the electric coolant pump hoses.

❏ Remove the electric coolant pump.

REFITTING

I - REFITTING OPERATION FOR PART CONCERNED

❏ Refit the electric coolant pump.

❏ Connect the hoses to the electric coolant pump.

❏ Fit the clips on the electric coolant pump hoses using the tool **(Mot. 1202-01)** or **(Mot. 1202-02)** or **(Mot. 1448)**.

❏ Remove the tool **(Ms. 583)** on the electric coolant pump hoses.

❏ Connect the electric coolant pump connector.

K9K, and 734

- ❑ Fit the electric coolant pump.
- ❑ Refit the electric coolant pump rubber mounting clips.
- ❑ Clip on the cooling hoses.

II - FINAL OPERATION

- ❑ Refit the engine undertray.
- ❑ Fill and bleed the cooling system (see **19A**, **Cooling**, **Cooling circuit: Draining - Refilling**, page **19A-15**) .

Coolant temperature sensor: Removal - Refitting

B84 or C84 or E84 or K84 or L84, and M9R

IMPORTANT

The circuits are designed to be pressurised, so be careful at high temperatures (risk of serious burns).

Do not remove the cap from the expansion bottle while the engine is hot.

Take care when carrying out a repair under the bonnet, as the radiator fan(s) may start to operate without warning.

Do not open the bleed screw(s) with the engine running.

REMOVAL

I - REMOVAL PREPARATION OPERATION

❑ Position the vehicle on a two-post lift (see **Vehicle: Towing and lifting**) (MR 364, 02A, Lifting equipment).

❑ Remove:

- the engine covers,
- the battery (see **Battery: Removal - Refitting**) (MR 364, 80A, Battery),
- the battery tray (see **Battery tray: Removal - Refitting**) (MR 364, 80A, Battery),
- the engine undertray bolts,
- the engine undertray.

❑ Drain the cooling system (see **19A**, **Cooling**, **Cooling circuit: Draining - Refilling**, page **19A-15**) .

II - OPERATION FOR REMOVAL OF PART CONCERNED

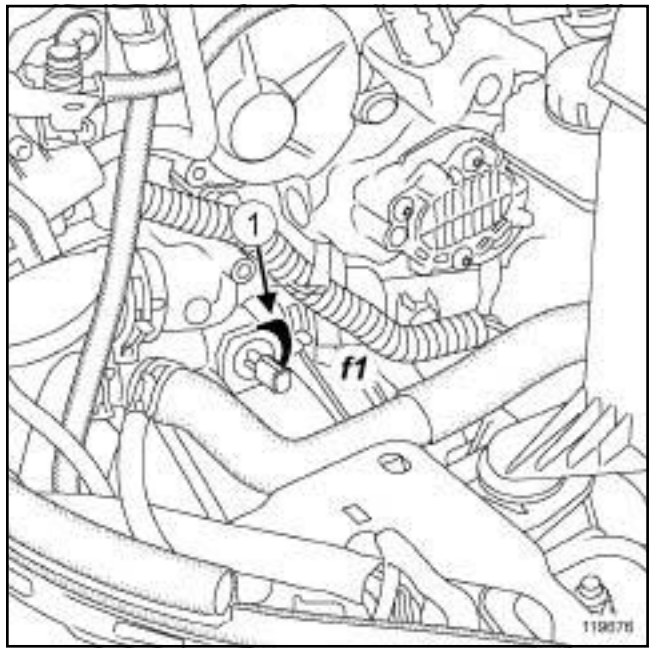

119676

❑ Disconnect the coolant temperature sensor connector.

❑ Move the clip (**1**) in the direction of the arrow (**f1**) .

❑ Remove the coolant temperature sensor.

REFITTING

I - REFITTING OPERATION FOR PART CONCERNED

❑ Refit the coolant temperature sensor.

❑ Fit the coolant temperature sensor clip.

❑ Connect the coolant temperature sensor connector.

II - FINAL OPERATION.

❑ Refit:

- the battery tray (see **Battery tray: Removal - Refitting**) (MR 364, 80A, Battery),
- the battery (see **Battery: Removal - Refitting**) (MR 364, 80A, Battery).

❑ Perform the following operations:

- fill the cooling system (see **19A**, **Cooling**, **Cooling circuit: Draining - Refilling**, page **19A-15**) ,
- bleed the cooling system (see **19A**, **Cooling**, **Cooling circuit: Draining - Refilling**, page **19A-15**) .

B84 or C84 or E84 or K84 or L84, and M9R

❑ Refit:

- the engine cover,
- the engine undertray.
- the engine undertray bolts.

F9Q

IMPORTANT

The circuits are designed to be pressurised, so be careful at high temperatures (risk of serious burns).

Do not remove the cap from the expansion bottle while the engine is hot.

Take care when carrying out a repair under the bonnet, as the radiator fan(s) may start to operate without warning.

Do not open the bleed screw(s) with the engine running.

REMOVAL

I - REMOVAL PREPARATION OPERATION

❏ Position the vehicle on a two-post lift (see **Vehicle: Towing and lifting**) (02A, Lifting equipment).

❏ Remove:

- the engine covers,
- the battery (see **Battery : Removal - Refitting**) (80A, Battery),
- the battery tray (see **Battery tray: Removal - Refitting**) (80A, Battery),
- the engine undertray.

❏ Drain the cooling system (see **19A**, **Cooling**, **Cooling circuit: Draining - Refilling**, page **19A-15**) .

II - OPERATION FOR REMOVAL OF PART CONCERNED

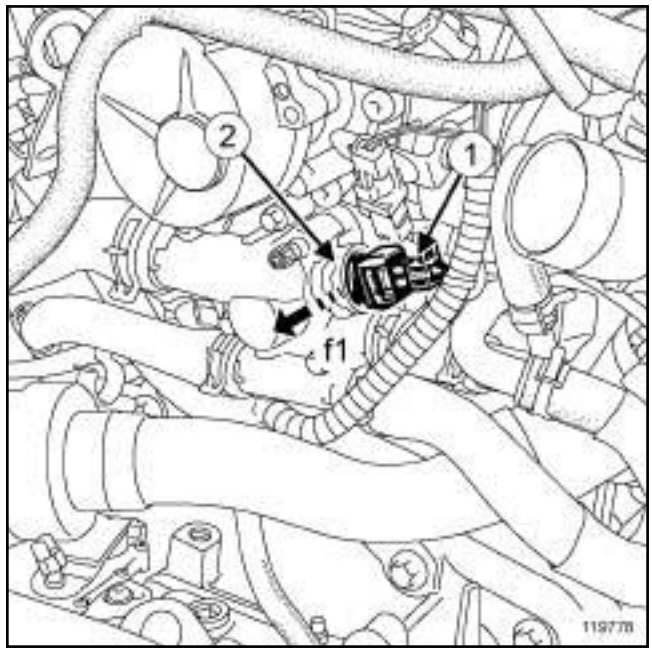

119778

❏ Disconnect the coolant temperature sensor connector (**1**) .

❏ Move the clip (**2**) in the direction of the arrow (**f1**) .

❏ Remove the coolant temperature sensor.

REFITTING

I - REFITTING OPERATION FOR PART CONCERNED

❏ Refit the coolant temperature sensor.

❏ Fit the clip.

❏ Connect the coolant temperature sensor connector.

II - FINAL OPERATION

❏ Refit:

- the battery tray (see **Battery tray: Removal - Refitting**) (80A, Battery),
- the battery (see **Battery : Removal - Refitting**) (80A, Battery).

❏ Fill and bleed the cooling system (see **19A**, **Cooling**, **Cooling circuit: Draining - Refilling**, page **19A-15**) .

❏ Refit:

- the engine covers,
- the engine undertray.

Coolant temperature sensor: Removal - Refitting

K9K

Essential special tooling	
Mot. 1202-01	Pliers for large hose clips.
Mot. 1202-02	Pliers for small hose clips.
Mot. 1448	Long nose pliers for hose clips.

IMPORTANT

The circuits are designed to be pressurised, so be careful at high temperatures (risk of serious burns).

Do not remove the cap from the expansion bottle while the engine is hot.

Take care when carrying out a repair under the bonnet, as the radiator fan(s) may start to operate without warning.

Do not open the bleed screw(s) with the engine running.

IMPORTANT

Wear leaktight gloves (Nitrile type) for this operation.

WARNING

Prepare for the flow of fluid, and protect the surrounding components.

REMOVAL

I - REMOVAL PREPARATION OPERATION

❑ Position the vehicle on a two-post lift (see **Vehicle: Towing and lifting**) (02A, Lifting equipment).

❑ Remove:

- the engine cover,
- the battery (see **Battery: Removal - Refitting**) (80A, Battery),
- the battery tray (see **Battery tray: Removal - Refitting**) (80A, Battery),
- the engine undertray bolts,
- the engine undertray.

❑ Drain the cooling system (see **19A**, **Cooling**, **Cooling circuit: Draining - Refilling**, page **19A-15**) .

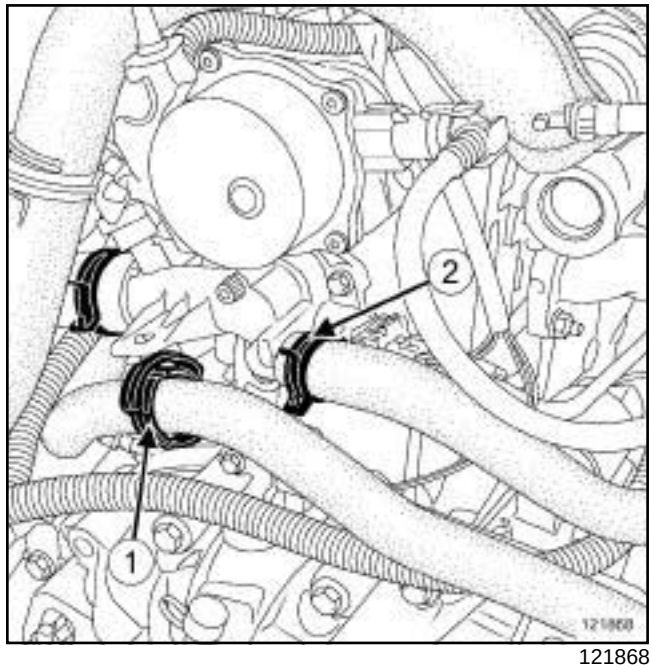

121868

❑ Unclip the hose from the coolant pump inlet pipe at (**1**) .

❑ Separate the clips (**2**) on the water chamber hoses using the **(Mot. 1202-01)** or **(Mot. 1202-02)** or **(Mot. 1448)**.

❑ Disconnect the hoses from the water chamber.

K9K

II - OPERATION FOR REMOVAL OF PART CONCERNED

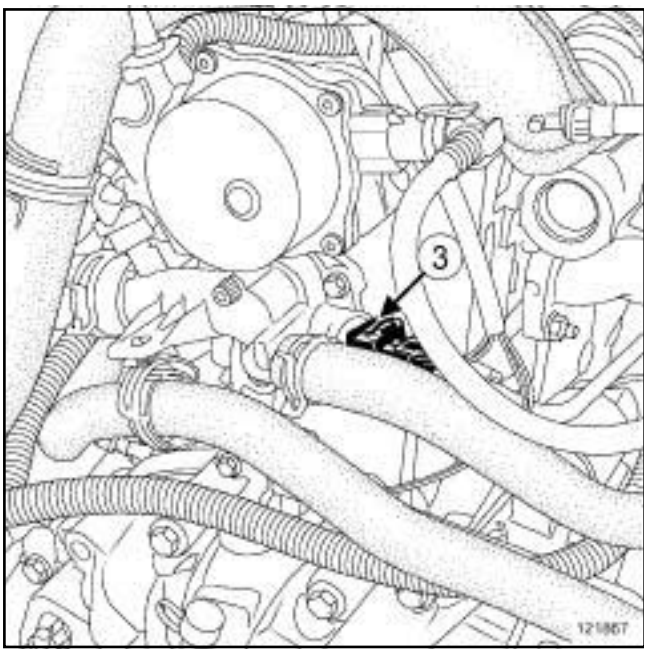

121867

- ❑ Disconnect the coolant temperature sensor connector (**3**) .
- ❑ Pull the clip of the coolant temperature sensor.
- ❑ Remove:
  - the coolant temperature sensor,
  - the coolant temperature sensor seal.

> Note:
>
> The seal may remain stuck to the bottom of the water chamber well.

REFITTING

I - REFITTING OPERATION FOR PART CONCERNED

- ❑ Refit:
  - a new seal on the coolant temperature sensor,
  - the coolant temperature sensor.
- ❑ Push the clip of the coolant temperature sensor.
- ❑ Connect the coolant temperature sensor connector.

II - FINAL OPERATION

- ❑ Connect the water chamber hoses.
- ❑ Fit the clips on the water chamber hoses using the **(Mot. 1202-01)** or **(Mot. 1202-02)** or **(Mot. 1448)**.
- ❑ Clip the hose onto the coolant pump inlet pipe.
- ❑ Refit:
  - the engine undertray bolts,
  - the battery tray (see **Battery tray: Removal - Refitting**) (80A, Battery),
  - the battery (see **Battery: Removal - Refitting**) (80A, Battery),
  - the engine cover.
- ❑ Fill and bleed the cooling system (see **19A**, **Cooling**, **Cooling circuit: Draining - Refilling**, page **19A-15**) .
- ❑ Refit the engine undertray.

Coolant temperature sensor: Removal - Refitting

F4R

Tightening torques ▽	
coolant temperature sensor	**32 N.m**

IMPORTANT

The circuits are designed to be pressurised, so be careful at high temperatures (risk of serious burns).

Do not remove the cap from the expansion bottle while the engine is hot.

Take care when carrying out a repair under the bonnet, as the radiator fan(s) may start to operate without warning.

Do not open the bleed screw(s) with the engine running.

WARNING

Before the operation, protect the electrical accessories to prevent any risk of short circuiting and protect the belts to avoid damaging them.

WARNING

The coolant helps to keep the engine running properly (heat exchange).

The system does not operate using pure water.

REMOVAL

I - REMOVAL PREPARATION OPERATION

❑ Remove the front engine cover.

II - OPERATION FOR REMOVAL OF PART CONCERNED

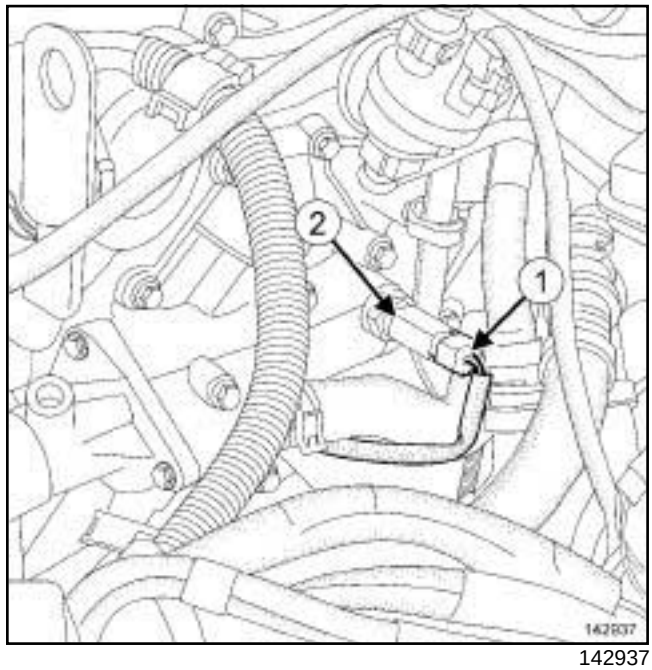

142937

❑ Disconnect the coolant temperature sensor connector (**1**) .

❑ Remove the coolant temperature sensor (**2**) .

REFITTING

I - REFITTING PREPARATION OPERATION

❑ Use **SURFACE CLEANER** (see **Vehicle: Parts and ingredients for the repairwork**) (04B, Consumables - Products) to clean and degrease:

- the coolant temperature sensor housing in the water chamber,
- the mating face of the coolant temperature sensor if it is to be reused.

II - REFITTING OPERATION FOR PART CONCERNED

❑

Note:

Apply 1 or 2 drops of **FRENETANCHE** (see **Vehicle: Towing and lifting**) (04B, Consumables - Products) to the thread of the coolant temperature sensor.

❑ Refit the coolant temperature sensor.

❑ Torque tighten the **coolant temperature sensor (32 N.m)**.

F4R

❏ Connect the coolant temperature sensor connector.

III - FINAL OPERATION

❏ Perform the following operations:

- top up the coolant level,
- bleed the cooling system (see **19A**, **Cooling**, **Cooling circuit: Draining - Refilling**, page **19A-15**) .

❏ Refit the engine cover.

Essential special tooling	
Mot. 1199-01	Exhaust pipe cutter (diameter 35/50 mm and diameter 50/65mm). Complete kit in a case.

I - PARTS AND CONSUMABLES FOR THE REPAIR

1 - Parts always to be replaced:

- the exhaust trunking (if fitted)
- the seal or sealing ring on the connection between the catalytic converter or catalytic pre-converter and the rest of the exhaust system
- the exhaust clip(s) (if fitted)

2 - Consumables (see part no. in Technical Note 5068, 04B, Consumables - Products):

- exhaust mastic
- surface cleaner
- abrasive pads

II - ADVICE TO OBSERVE

IMPORTANT
Do not park and run the engine in a place where combustible substances and materials such as grass or leaves can come into contact with the hot exhaust system.

IMPORTANT
Catalytic converters contain ceramic fibres, these are contained within a closed unit, and cannot disperse. Drilling or cutting catalytic converters is prohibited.

1 - During removal and refitting, the catalytic converter or catalytic pre-converter must not receive any knocks or impacts as this could damage it.

2 - The whole exhaust pipe is made of stainless steel.

3 - After working on the bracket between the catalytic converter or catalytic pre-converter and the rest of the exhaust system, ensure that the connection is perfectly sealed.

To do this:

- clean the pressure faces of the connection using the **ABRASIVE PADS**,
- degrease the pressure faces of the connection using **SURFACE CLEANER** and clean cloths,
- always replace the seal or sealing ring on the connection.

III - SPECIAL NOTES ON THE SINGLE UNIT EXHAUST PIPE

1 - Cutting the single unit exhaust pipe

The exhaust pipe is a « single unit type » .

To replace different parts of the exhaust system it must be cut.

To do this be sure to carry out these precautions in the following order:

- correctly identify the area to be cut, as explained below,
- use the cutting tool correctly **(Mot. 1199-01)**,
- position the exhaust trunking correctly.

2 - Identifying the area of the exhaust system to be cut

Two marks made on the exhaust system define the area to be cut (see **19B**, **Exhaust**, **Exhaust: Parts and consumables for the repair work**, page **19B-6**) (see MR for vehicle concerned, 19B, Exhaust).

Example of cutting area

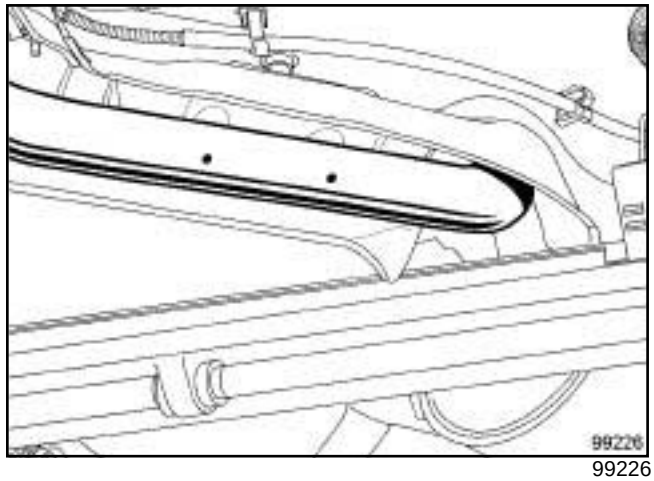

99226

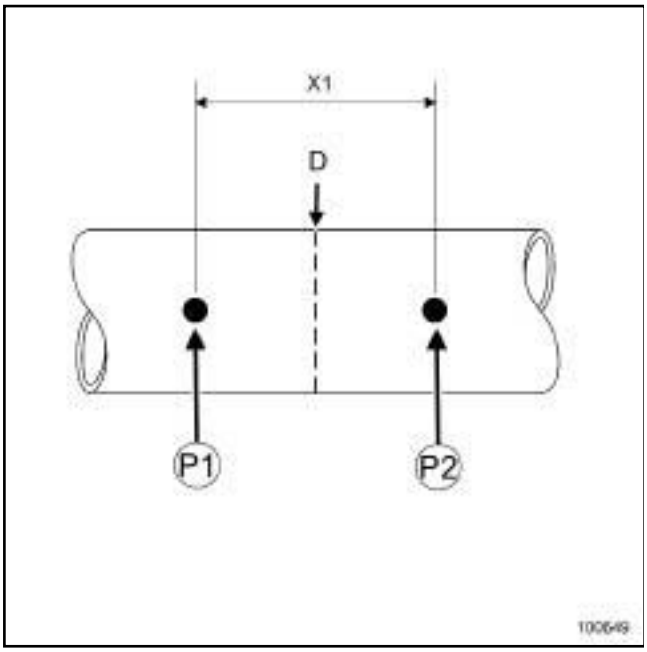

100649

Before cutting the exhaust system, draw a line between the two marks.

The distance between the two marks on the exhaust pipe is: **90 mm** (all types except RENAULT SPORT).

The distance between the two marks on the exhaust pipe is: **80 mm** (RENAULT SPORT).

3 - Operate tool Mot. 1199-01

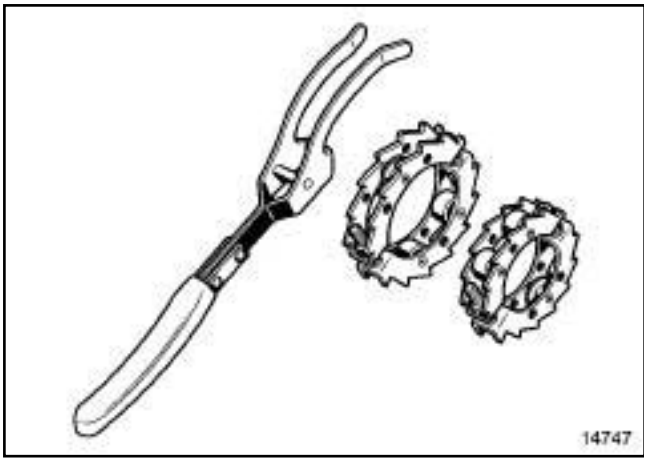

14747

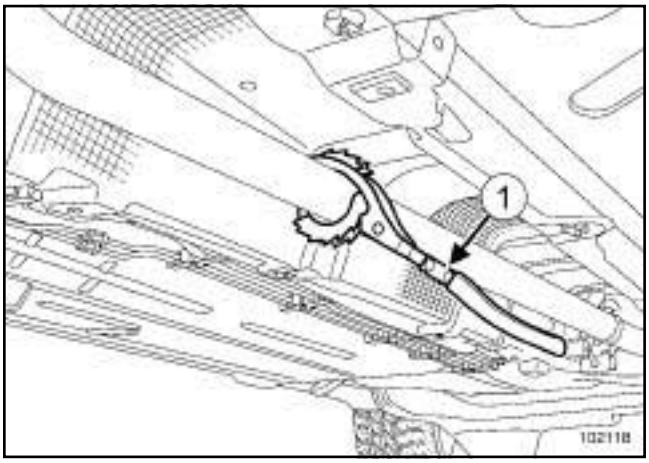

102118

Fit the **(Mot. 1199-01)** (**1**) on the exhaust pipe.

Tighten the two bolts on the tool until they touch the pipe in order to clamp the tool onto the pipe.

Turn the cutting tool using the handle and pressing it against the pipe (as indicated in the diagram above).

Tighten the two bolts on the tool whilst cutting, until the pipe is completely cut.

> Note:
>
> Do not over-tighten the tool onto the pipe to avoid deforming it.

Once the pipe is cut, file and deburr the end of the pipe to be used on the vehicle again

.

4 - Special note on the replacement part

> Note:
>
> The expansion chambers and the intermediate pipes supplied to the Parts Department are a specific length and must be adapted before being fitted on the vehicle.
>
> To do this, read given the information given in the table below then cut the spare part, if necessary.

WARNING
Do not adapt the spare parts for the following vehicles: K/LM0S, K/LM2E, K/LM2F, K/LM2M, K/LM2G, K/LM2N, LM05/TLURUG , K/LM02 special series EBASEM and EPACKM.

Spare part for the following versions:	Length of cut to be made on the spare part
K4J	JMXX standard chassis/KMXX/LMXX = do not cut BMXX/CMXX/GMXX/SMXX = -60 mm EMXX = -160 mm
F4R*774, 776	JMXX long chassis = do not cut JMXX standard chassis/KMXX/LMXX = -50 mm BMXX/CMXX/GMXX/SMXX = -110 mm EMXX = -125 mm
K4M or F4R*770, 771 or All Diesel engines **without a particle filter**	JMXX long chassis = do not cut JMXX standard chassis/KMXX/LMXX = -50 mm BMXX/CMXX/GMXX/SMXX = -110 mm EMXX = -210mm
All Diesel engines **with a particle filter**	JMXX long chassis = -227 mm JMXX standard chassis/KMXX/LMXX = -327 mm BMXX/CMXX/GMXX/SMXX = -387 mm EMXX = -487 mm

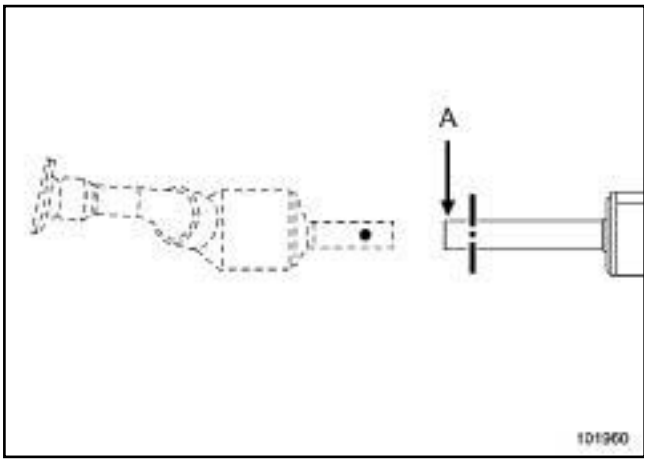

101960

Cut the length of exhaust pipe indicated in the table above, from point ***(A)*** of the spare part.

5 - Positioning the exhaust trunking

WARNING
Do not reuse an old exhaust trunking.

Exhaust trunking with 1 bolt

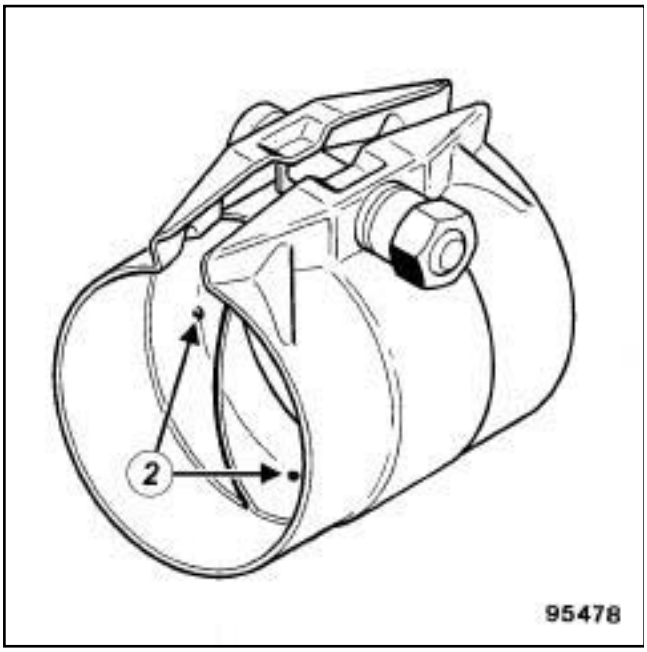

95478

Exhaust trunking with 2 bolts

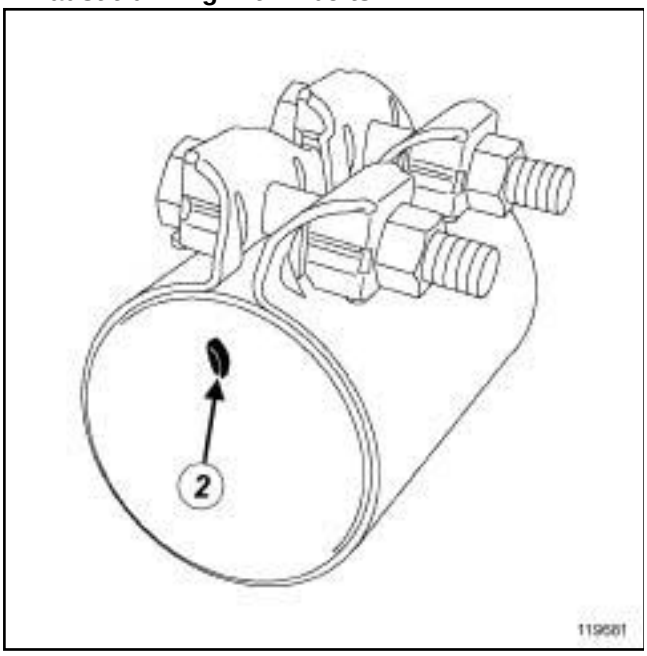

119681

Fit the exhaust trunking onto the part of the exhaust system fitted to the vehicle.

Position the pipe onto the lugs (**2**) inside the exhaust trunking.

Tighten the exhaust trunking bolt(s) slightly (depending on the version).

Position the second part of the exhaust system under the vehicle, fitting it in the exhaust trunking.

Note:

If necessary, use a workshop jack to lift and hold the heavy and bulky components of the exhaust system.

Position the second exhaust pipe onto the lugs inside the exhaust trunking.

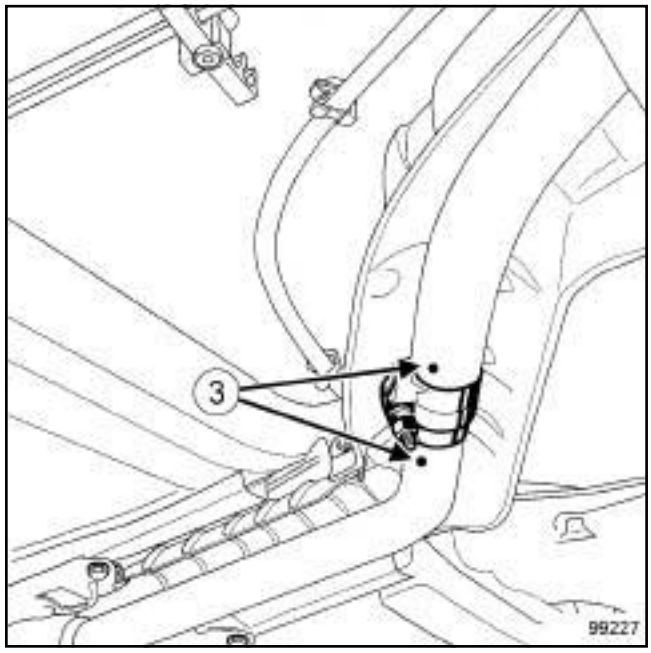

99227

Check that the two cut marks are aligned (if applicable).

Position the trunking so that there is no risk of contact between its bolt or bolts and the heat shields.

Torque tighten

- the **exhaust trunking nut with 1 bolt (25 N.m)** (if fitted),
- the **exhaust trunking nuts with 2 bolts (18 N.m)** (if fitted).

Check the following and deal with if necessary:

- no underbody contact between the exhaust system and the heat shields,
- all of the heat shields are present and secure.

Note:

Any damaged heat shields must be replaced.

Start the engine.

Check that there are no leaks: deal with any leaks.

Note:

If there are leaks from the **EXHAUST TRUNKING WITH 1 BOLT**, apply **EXHAUST MASTIC** to the trunking (see part no. in Technical Note 5068, 04B, Consumables - Products).

If the application of exhaust mastic does not fix the leak:

- remove and replace the used exhaust trunking,
- check the condition of the exhaust pipes (condition of the pipe surface, deburring of the area cut, damage to the pipes).
- fit the new trunking in accordance with the instructions given before.

B84 or C84 or G84 or K84 or L84 or S84, and EQT LEVEL EA1 or EQT LEVEL EA2 or EQT LEVEL EA3 or EQT LEVEL EA4

B84 or C84 or G84 or K84 or L84 or S84, and EQT LEVEL EA1 or EQT LEVEL EA2 or EQT LEVEL EA3 or EQT LEVEL EA4

K4J, and 730 or 732 or 740

Exhaust: Parts and consumables for the repair work

B84 or C84 or G84 or K84 or L84 or S84, and EQT LEVEL EA1 or EQT LEVEL EA2 or EQT LEVEL EA3 or EQT LEVEL EA4

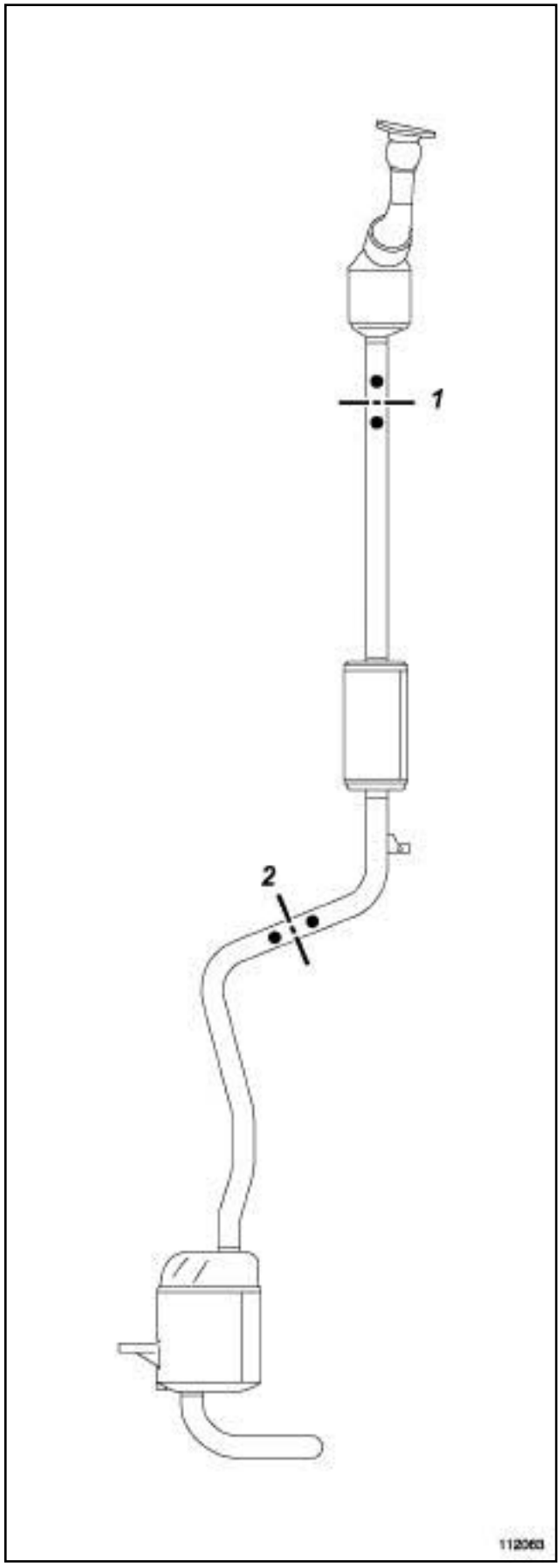

B84 or C84 or G84 or K84 or L84 or S84, and EQT LEVEL EA1 or EQT LEVEL EA2 or EQT LEVEL EA3 or EQT LEVEL EA4

112063

(**1**) Area to be cut 1

(**2**) Area to be cut 2

B84 or C84 or G84 or K84 or L84 or S84, and EQT LEVEL EA1 or EQT LEVEL EA2 or EQT LEVEL EA3 or EQT LEVEL EA4

K4M, and 760 or 761 or 768 or 788 or 812 or 813

Exhaust: Parts and consumables for the repair work

B84 or C84 or G84 or K84 or L84 or S84, and EQT LEVEL EA1 or EQT LEVEL EA2 or EQT LEVEL EA3 or EQT LEVEL EA4

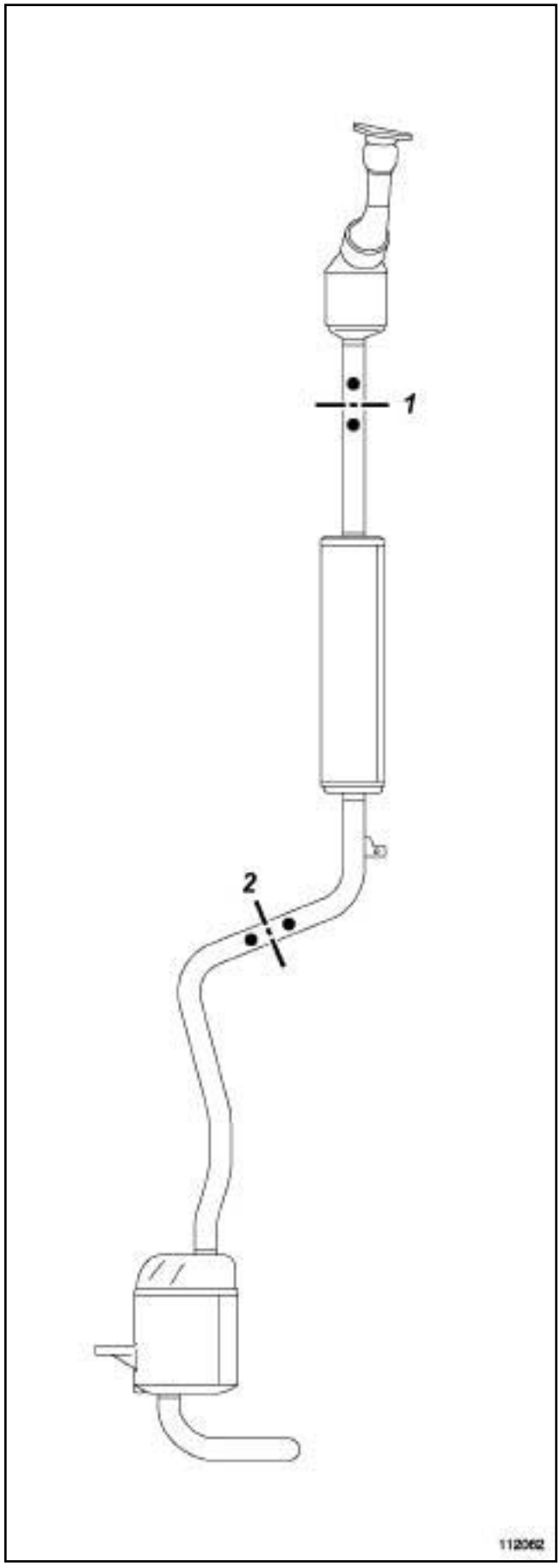

B84 or C84 or G84 or K84 or L84 or S84, and EQT LEVEL EA1 or EQT LEVEL EA2 or EQT LEVEL EA3 or EQT LEVEL EA4

112062

(**1**) Area to be cut 1

(**2**) Area to be cut 2

B84 or C84 or G84 or K84 or L84 or S84, and EQT LEVEL EA1 or EQT LEVEL EA2 or EQT LEVEL EA3 or EQT LEVEL EA4

F4R, and 770 or 771 or 776

Exhaust: Parts and consumables for the repair work

B84 or C84 or G84 or K84 or L84 or S84, and EQT LEVEL EA1 or EQT LEVEL EA2 or EQT LEVEL EA3 or EQT LEVEL EA4

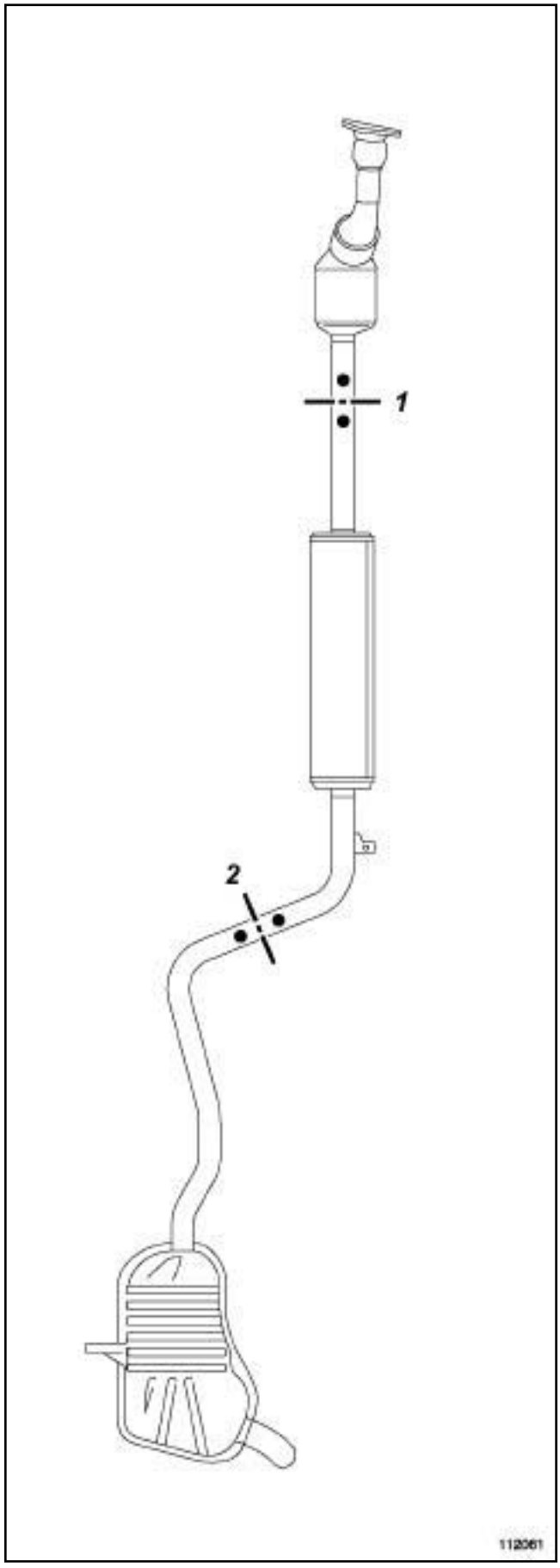

B84 or C84 or G84 or K84 or L84 or S84, and EQT LEVEL EA1 or EQT LEVEL EA2 or EQT LEVEL EA3 or EQT LEVEL EA4

112061

(**1**) Area to be cut 1

(**2**) Area to be cut 2

B84 or C84 or G84 or K84 or L84 or S84, and EQT LEVEL EA1 or EQT LEVEL EA2 or EQT LEVEL EA3 or EQT LEVEL EA4

K9K, and 722

Exhaust: Parts and consumables for the repair work

B84 or C84 or G84 or K84 or L84 or S84, and EQT LEVEL EA1 or EQT LEVEL EA2 or EQT LEVEL EA3 or EQT LEVEL EA4

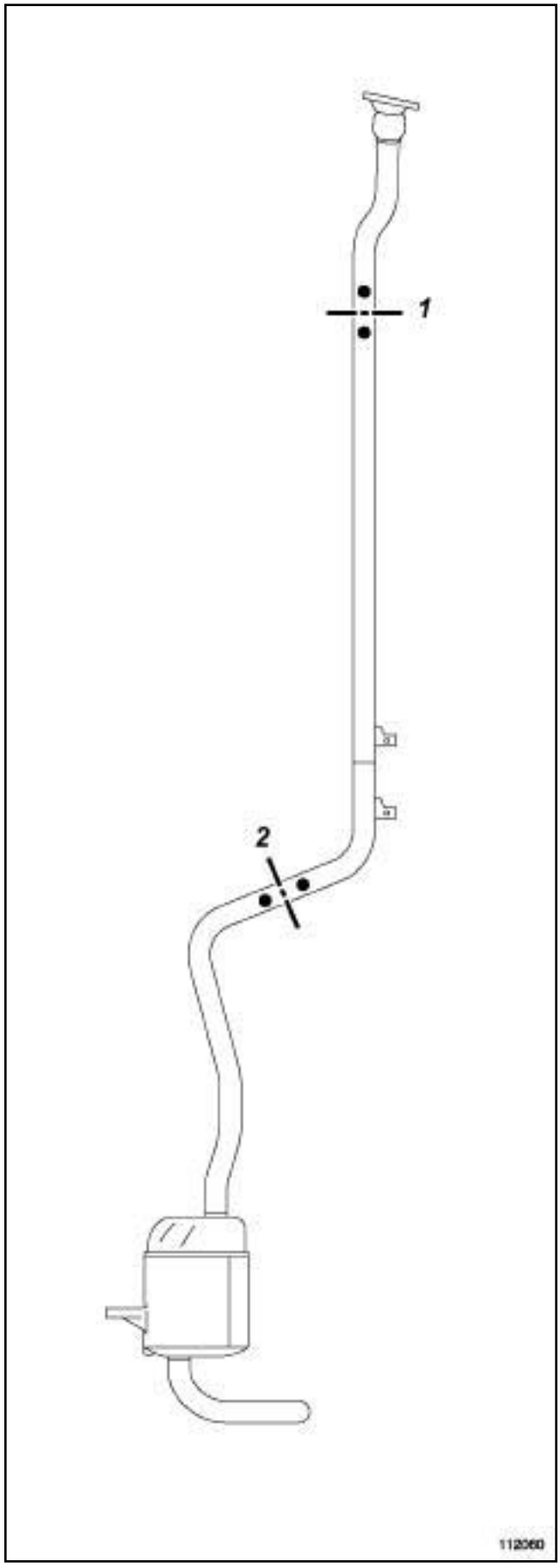

B84 or C84 or G84 or K84 or L84 or S84, and EQT LEVEL EA1 or EQT LEVEL EA2 or EQT LEVEL EA3 or EQT LEVEL EA4

112060

(**1**) Area to be cut 1

(**2**) Area to be cut 2

B84 or C84 or G84 or K84 or L84 or S84, and EQT LEVEL EA1 or EQT LEVEL EA2 or EQT LEVEL EA3 or EQT LEVEL EA4

K9K, and 728 or 729 or 732 – M9R, and 700 – F9Q, and 800 or 808

Exhaust: Parts and consumables for the repair work

B84 or C84 or G84 or K84 or L84 or S84, and EQT LEVEL EA1 or EQT LEVEL EA2 or EQT LEVEL EA3 or EQT LEVEL EA4

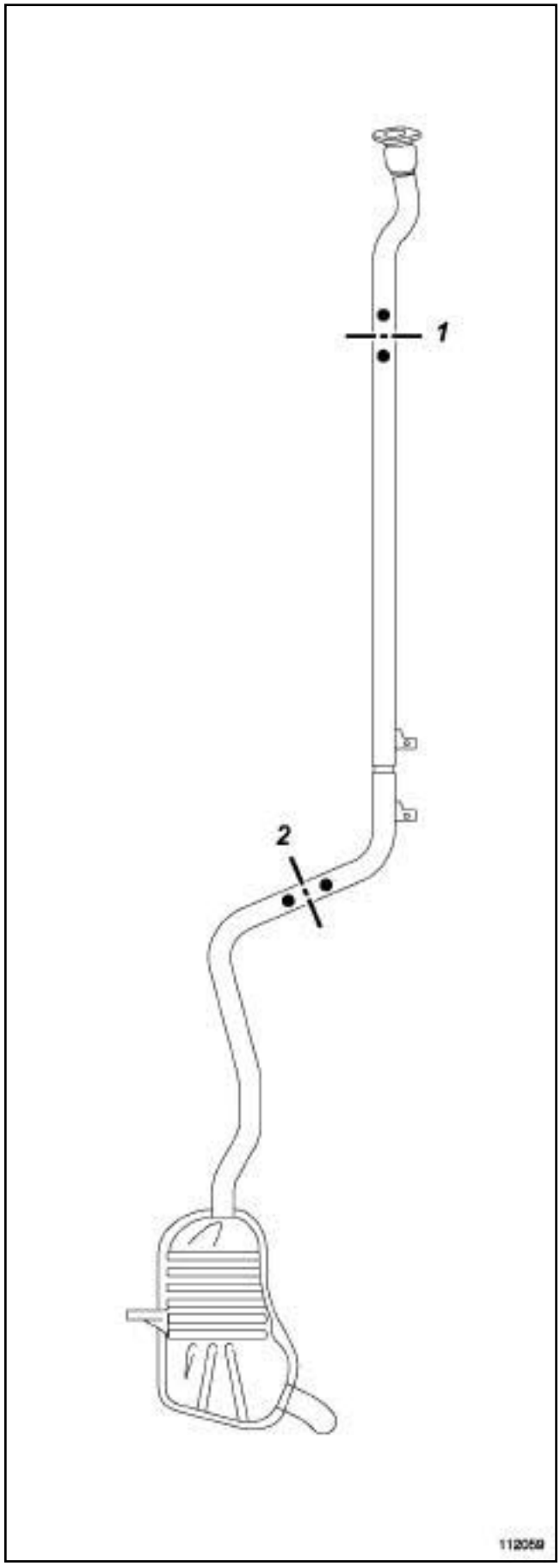

B84 or C84 or G84 or K84 or L84 or S84, and EQT LEVEL EA1 or EQT LEVEL EA2 or EQT LEVEL EA3 or EQT LEVEL EA4

112059

(**1**) Area to be cut 1

(**2**) Area to be cut 2

B84 or C84 or G84 or K84 or L84 or S84, and EQT LEVEL EA1 or EQT LEVEL EA2 or EQT LEVEL EA3 or EQT LEVEL EA4

K9K, and 734

B84 or C84 or G84 or K84 or L84 or S84, and EQT LEVEL EA1 or EQT LEVEL EA2 or EQT LEVEL EA3 or EQT LEVEL EA4

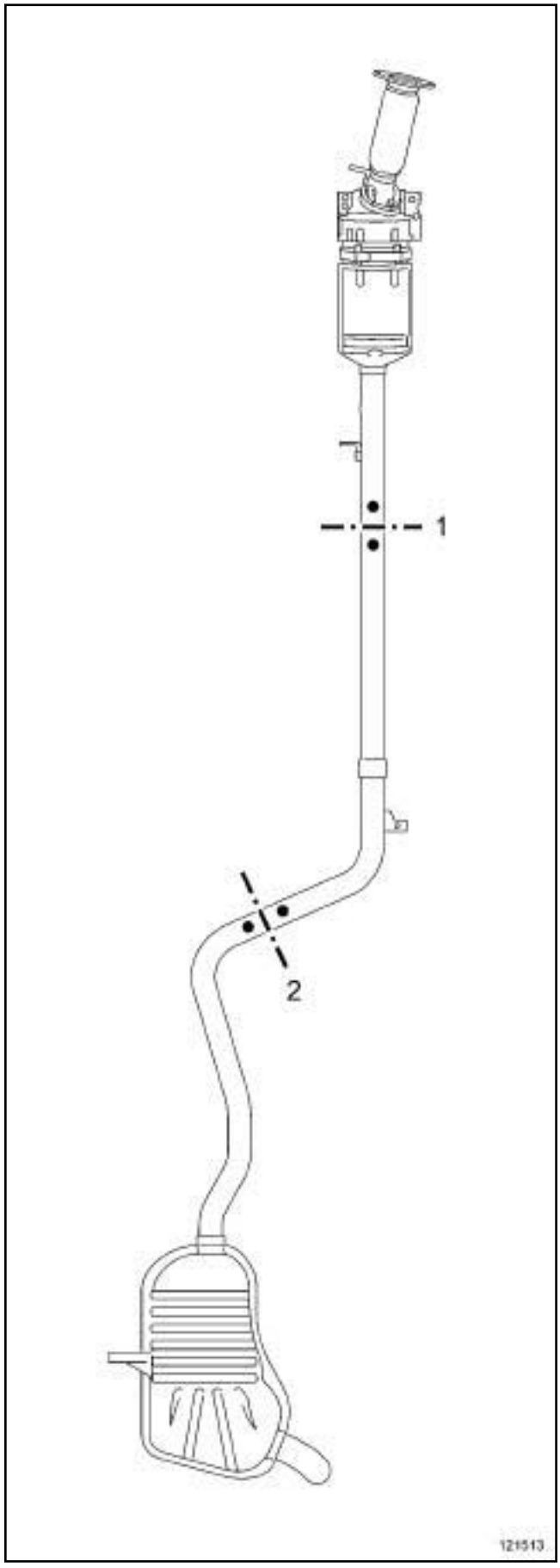

B84 or C84 or G84 or K84 or L84 or S84, and EQT LEVEL EA1 or EQT LEVEL EA2 or EQT LEVEL EA3 or EQT LEVEL EA4

121513

(**1**) Area to be cut 1

(**2**) Area to be cut 2

B84 or C84 or G84 or K84 or L84 or S84, and EQT LEVEL EA1 or EQT LEVEL EA2 or EQT LEVEL EA3 or EQT LEVEL EA4

F9Q, and 803 or 804

Exhaust: Parts and consumables for the repair work

B84 or C84 or G84 or K84 or L84 or S84, and EQT LEVEL EA1 or EQT LEVEL EA2 or EQT LEVEL EA3 or EQT LEVEL EA4

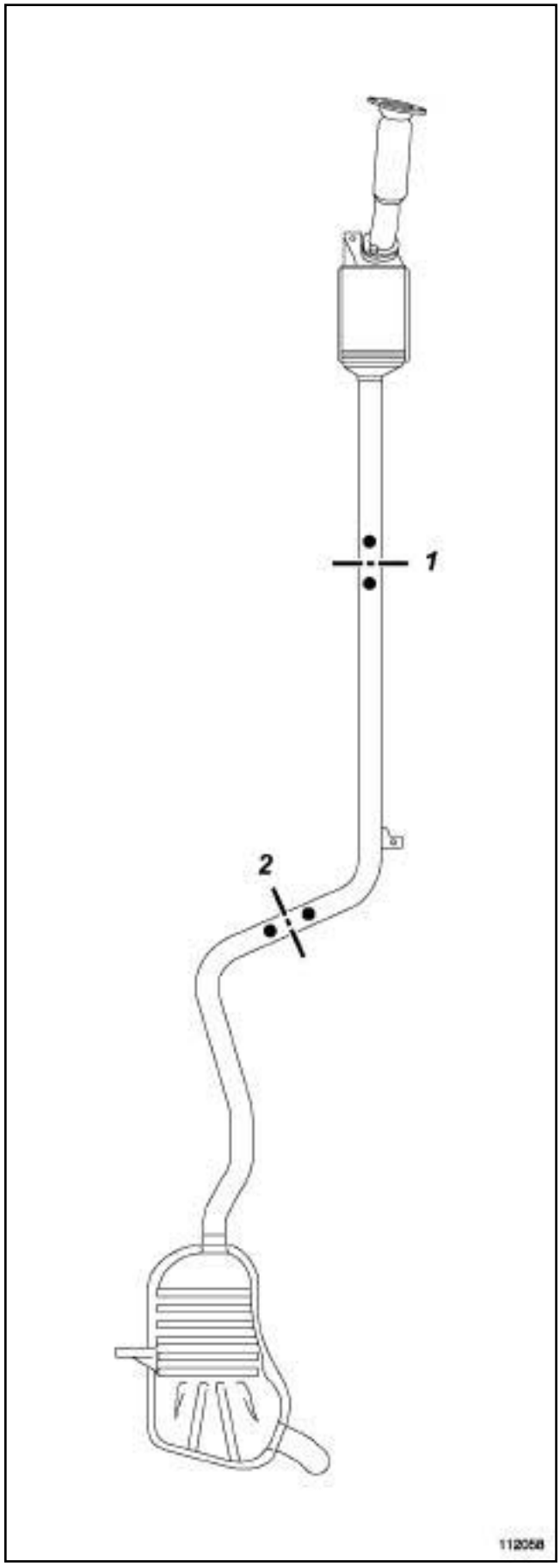

B84 or C84 or G84 or K84 or L84 or S84, and EQT LEVEL EA1 or EQT LEVEL EA2 or EQT LEVEL EA3 or EQT LEVEL EA4

112058

(**1**) Area to be cut 1

(**2**) Area to be cut 2

B84 or C84, and EQT LEVEL EAG

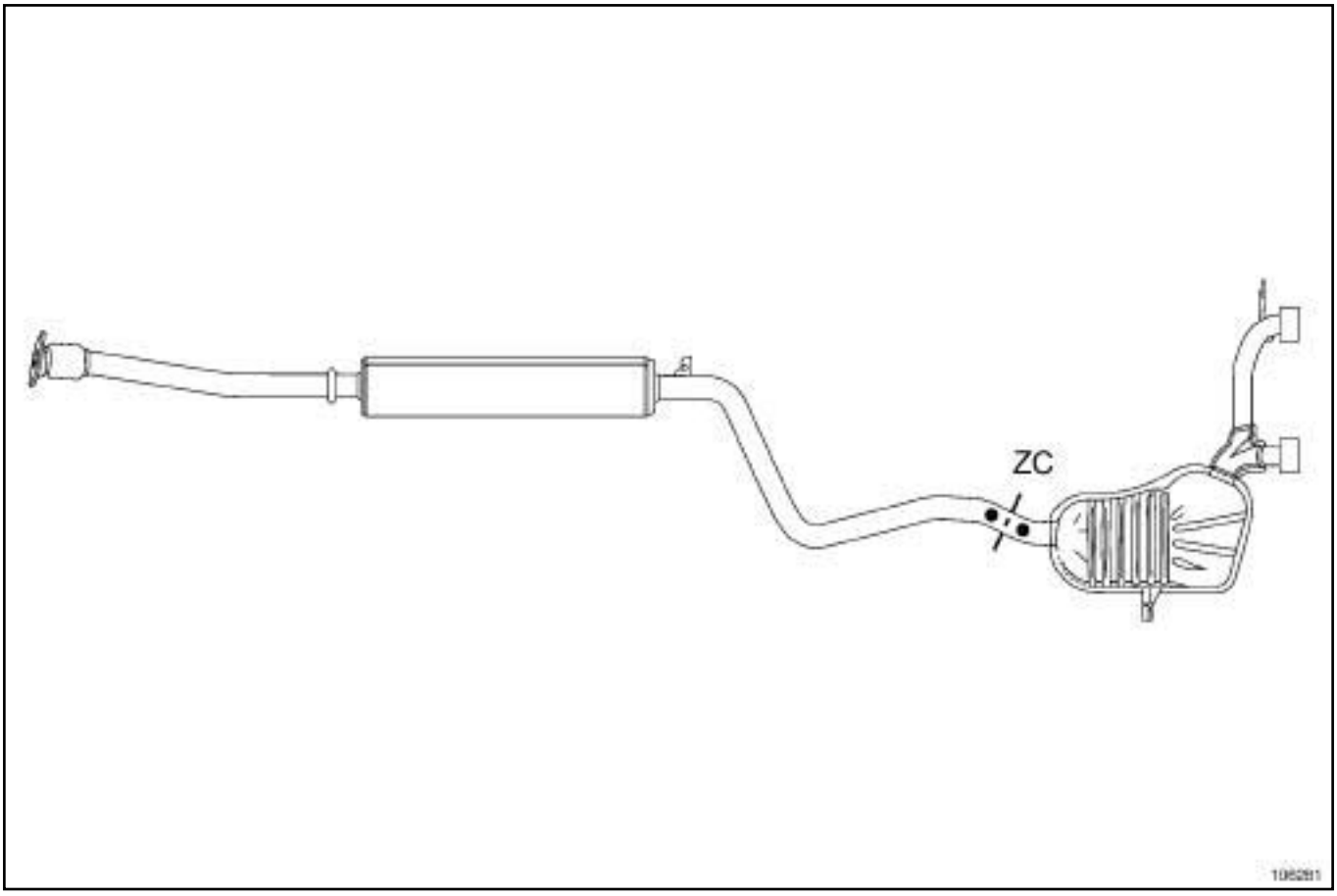

106281

(**AC**) Area to be cut

B84 or C84 or G84 or S84, and F4R, and 776

Tightening torques ▽	
downstream oxygen sensor	**34 Nm**
catalytic converter nuts (on the turbocharger)	**40 Nm**
catalytic converter upstream strut mounting bolts (on the engine)	**38 Nm**
upper bracket mounting bolt (on the exhaust manifold)	**8 Nm**
gearbox downstream strut mounting nut	**44 Nm**
catalytic converter mounting bolt (on the upstream strut)	**8 Nm**
upper bracket mounting bolt (on the catalytic converter)	**8 Nm**
catalytic converter mounting bolt on the downstream strut	**8 Nm**
exhaust bracket studs	**8 Nm**
upstream oxygen sensor	**34 Nm**

The engine must be removed in order to remove the catalytic pre-converter (see **10A**, **Engine and cylinder block assembly**, **Engine/gearbox assembly: Removal - Refitting**, page **10A-97**) .

REMOVAL

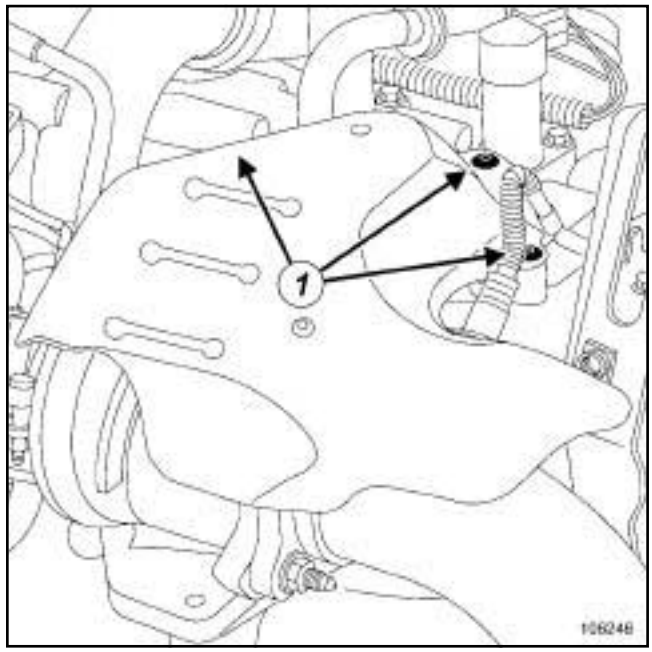

106246

❑ Remove:

- the heat shield mounting bolts (**1**) ,
- the heat shield.

B84 or C84 or G84 or S84, and F4R, and 776

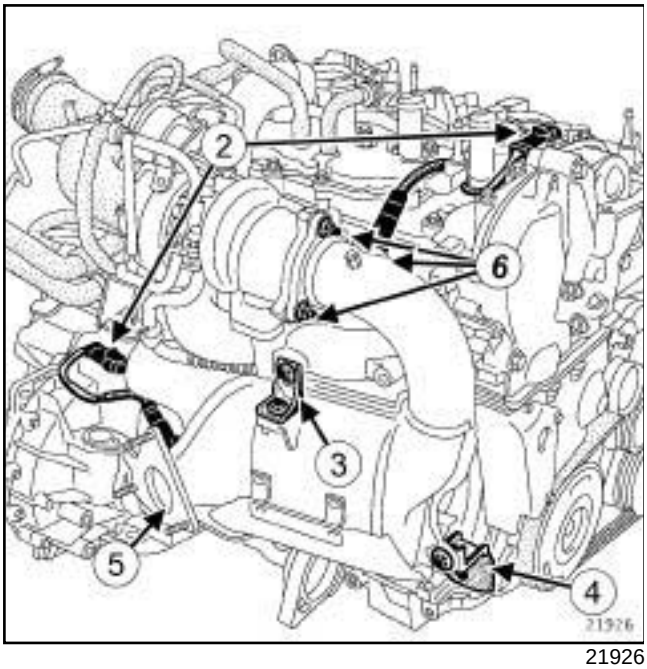

21926

❑ Disconnect the oxygen sensor connector (**2**) .

❑ Remove:

- the upper bracket mounting bolts,
- the upper bracket (**3**) ,
- the upstream stay mounting bolts,
- the upstream stay (**4**) ,
- the downstream stay mounting nut and bolt,
- the downstream stay (**5**) ,
- the nuts (**6**) mounting the catalytic converter to the turbocharger,
- the catalytic converter.

❑ On the workbench, remove the oxygen sensors.

REFITTING

❑ On the workbench, refit the downstream oxygen sensor on the catalytic converter.

❑ Torque tighten the **downstream oxygen sensor (34 Nm)**.

> **WARNING**
> Be sure to replace all the exhaust flange and turbocharger sealing joints.

❑ Tighten in order and until contact:

- the upstream stay mounting bolt (on the engine),
- the upper bracket mounting bolts,
- the nuts securing the catalytic converter to the turbocharger,
- the bolts mounting the catalytic converter to the upstream strut,
- the downstream stay mounting nut on the gearbox,
- the catalytic converter mounting bolt on the downstream stay,

❑ Torque tighten and in order:

- the **catalytic converter nuts (on the turbocharger) (40 Nm)**,
- the **catalytic converter upstream strut mounting bolts (on the engine) (38 Nm)**,
- the **upper bracket mounting bolt (on the exhaust manifold) (8 Nm)**,
- the **gearbox downstream strut mounting nut (44 Nm)**,
- the **catalytic converter mounting bolt (on the upstream strut) (8 Nm)**,
- the **upper bracket mounting bolt (on the catalytic converter) (8 Nm)**,
- the **catalytic converter mounting bolt on the downstream strut (8 Nm)**,
- the **exhaust bracket studs (8 Nm)**.

❑ Refit the upstream oxygen sensor connector on the catalytic converter.

❑ Torque tighten the **upstream oxygen sensor (34 Nm)**.

> Note:
> Make sure there is no contact between the catalytic converter and the turbocharger oil return pipe.

❑ Proceed in the reverse order to removal.

B84 or C84 or G84 or S84, and F9Q, and 803 or 804 or 816 or 818

Tightening torques ▽	
connector clip between the turbocharger and the catalytic pre-converter	**20 Nm**
catalytic pre-converter upstream strut nuts on the engine	**30 Nm**
catalytic pre-converter upstream strut nuts on the catalytic pre-converter	**30 Nm**
gearbox side catalytic pre-converter downstream strut bolts on the engine	**50 Nm**
gearbox side catalytic pre-converter downstream strut bolts on the catalytic pre-converter	**50 Nm**
timing end catalytic pre-converter downstream strut bolt on the engine	**50 Nm**
timing end catalytic pre-converter downstream strut nut on the catalytic pre-converter	**30 Nm**
catalytic pre-converter outlet exhaust bracket studs	**7 Nm**
exhaust bracket nuts	**21 Nm**

REMOVAL

I - REMOVAL PREPARATION OPERATION

❑ Position the vehicle on a two-post lift (see **Vehicle: Towing and lifting**) (MR 364, 02A, Lifting equipment).

❑ Disconnect the battery (see **Battery: Removal - Refitting**) (MR 364, 80A, Battery)..

❑ Remove:

- the engine covers,
- the upper engine tie-bar (see **19D**, **Engine mounting**, **Right-hand suspended engine mounting: Removal - Refitting**, page **19D-20**) (MR 364, 19D, Engine mounting).

F9Q, and 818

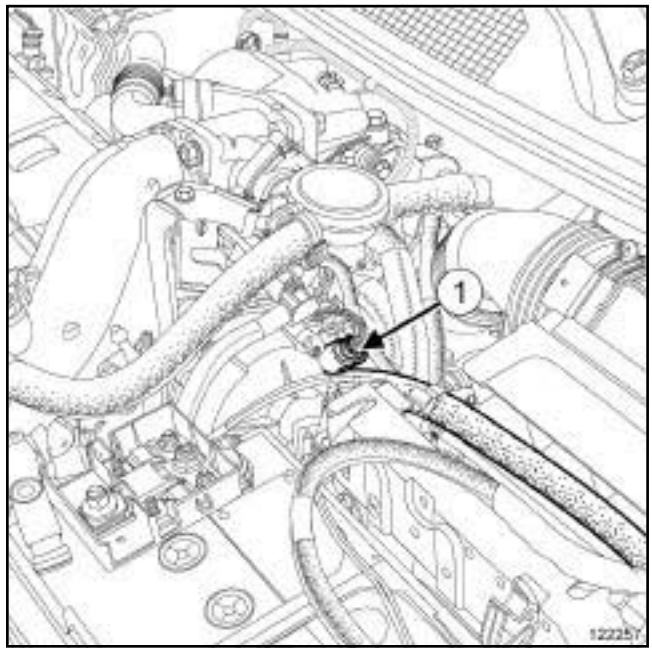

122257

❑ Disconnect the oxygen sensor (**1**) .

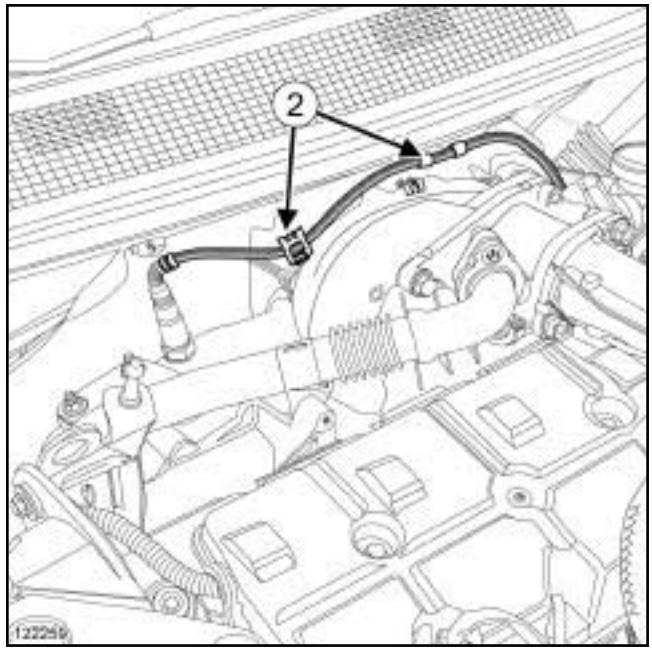

122259

❑ Detach the harness from the oxygen sensor (**2**) .

B84 or C84 or G84 or S84, and F9Q, and 803 or 804 or 816 or 818

❑ Remove:

- the engine undertray,
- the exhaust bracket bolts,
- the front right-hand driveshaft (see **Front right-hand wheel driveshaft: Removal - Refitting**) (MR 364, 29A, Driveshafts),
- the lower engine tie-bar (see **19D**, **Engine mounting**, **Lower engine tie-bar: Removal - Refitting**, page **19D-36**) .

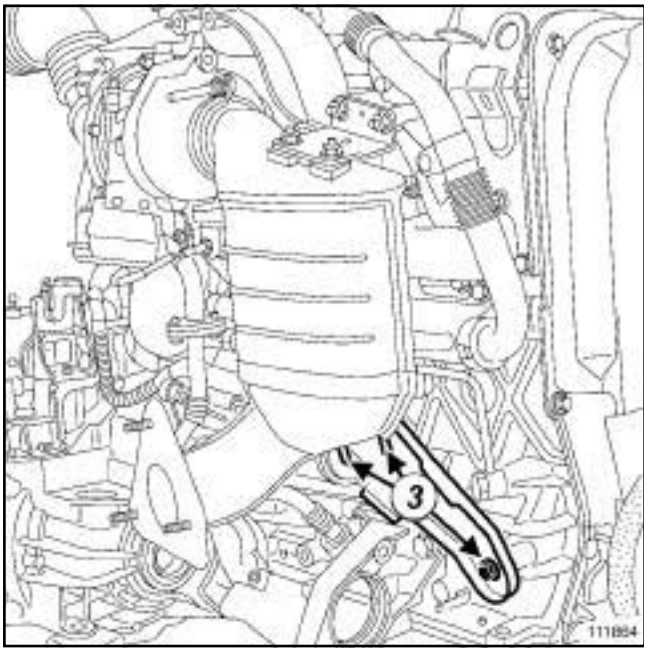

111864

❑ Remove:

- the catalytic pre-converter lower strut bolts (**3**) ,
- the catalytic pre-converter downstream strut.

II - OPERATION FOR REMOVAL OF PART CONCERNED

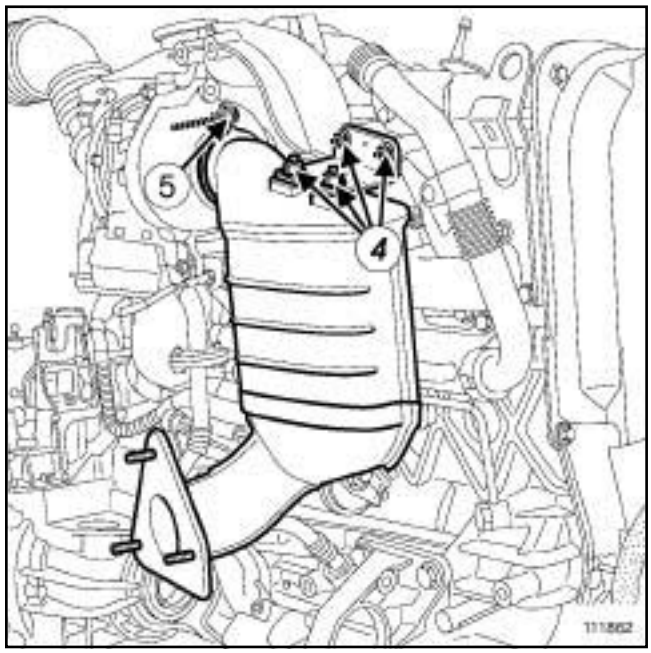

111862

❑ Remove:

- the catalytic pre-converter upstream strut bolts (**4**) ,
- the catalytic pre-converter upstream strut,
- the catalytic pre-converter and turbocharger clip bolt (**5**) ,
- the catalytic pre-converter.

B84 or C84 or G84 or S84, and F9Q, and 803 or 804 or 816 or 818

REFITTING

I - REFITTING OPERATION FOR PART CONCERNED

❑ Always replace:

- the catalytic converter seal,
- the connector clip between the turbocharger and the catalytic pre-converter.

❑ On the workbench, refit the gearbox side downstream strut to the catalytic pre-converter.

❑ Tighten the gearbox side downstream strut bolts on the catalytic pre-converter until they make contact.

❑ Fit the catalytic pre-converter to the engine.

❑ Tighten the gearbox side downstream strut bolts on the engine until they make contact.

❑ Refit:

- the connector clip between the turbocharger and the catalytic pre-converter,
- the catalytic pre-converter upstream stay.

❑ Tighten in order and until contact:

- the catalytic pre-converter upstream strut nuts on the engine,
- the catalytic pre-converter upstream strut nuts on the catalytic pre-converter,

❑ Loosen then tighten in order and until they make contact:

- the catalytic pre-converter gearbox side downstream strut bolts on the engine.
- the catalytic pre-converter gearbox side downstream strut bolts on the catalytic pre-converter.

❑ Refit the catalytic pre-converter downstream stay on the timing end.

❑ Tighten in order and until contact:

- the catalytic pre-converter downstream strut bolts (timing end) on the engine,
- the catalytic pre-converter timing end downstream strut nuts on the catalytic pre-converter,
- the connector clip between the turbocharger and the catalytic pre-converter.

❑ Torque tighten:

- the **connector clip between the turbocharger and the catalytic pre-converter (20 Nm)**,
- the **catalytic pre-converter upstream strut nuts on the engine (30 Nm)**,
- the **catalytic pre-converter upstream strut nuts on the catalytic pre-converter (30 Nm)**,
- the **gearbox side catalytic pre-converter downstream strut bolts on the engine (50 Nm)**,
- the **gearbox side catalytic pre-converter downstream strut bolts on the catalytic pre-converter (50 Nm)**,
- the **timing end catalytic pre-converter downstream strut bolt on the engine (50 Nm)**,
- the **timing end catalytic pre-converter downstream strut nut on the catalytic pre-converter (30 Nm)**.

> Note:
>
> Make sure there is no contact between the catalytic pre-converter and the turbocharger oil return pipe.

❑ Torque tighten:

- the **catalytic pre-converter outlet exhaust bracket studs (7 Nm)**,
- the **exhaust bracket nuts (21 Nm)**.

II - FINAL OPERATION.

F9Q, and 818

❑ Connect the oxygen sensor.

❑ Clip on the oxygen sensor wiring harness.

❑ Refit:

- the lower engine tie-bar (see **19D**, **Engine mounting**, **Lower engine tie-bar: Removal - Refitting**, page **19D-36**) .
- the front right-hand driveshaft (see **Front right-hand wheel driveshaft: Removal - Refitting**) (MR 364, 29A, Driveshaft),
- the exhaust bracket bolts,
- the engine undertray,

❑ Refit:

- the upper engine tie-bar (see **19D**, **Engine mounting**, **Right-hand suspended engine mounting: Removal - Refitting**, page **19D-20**) .
- the engine covers,

B84 or C84 or G84 or S84, and F9Q, and 803 or 804 or 816 or 818

- Make sure that there is no contact with the underbody.

> Note:
>
> Any damaged heat shields must be replaced.

- Connect the battery (see **Battery: Removal - Refitting**) (MR 364, 80A, Battery).

K9K, and 734

Tightening torques ▽	
catalytic pre-converter nuts on the turbocharger	**26 Nm**

Note:

Before carrying out work on the catalytic pre-converter (see **19B**, **Exhaust**, **Exhaust: Precautions for repair**, page **19B-1**) .

IMPORTANT
Wear protective gloves during the operation.

IMPORTANT
Wear heat protective gloves during the operation.

REMOVAL

I - REMOVAL PREPARATION OPERATION

❑ Position the vehicle on a two-post lift (see **Vehicle: Towing and lifting**) (MR 364, 02A, Lifting equipment).

❑ Disconnect the battery (see **Battery: Removal - Refitting**) (MR 364, 80A, Battery).

❑ Remove:

- the engine cover,
- the scuttle panel grille (see **Scuttle panel grille: Removal - Refitting**) (MR 365, 56A, Exterior equipment).

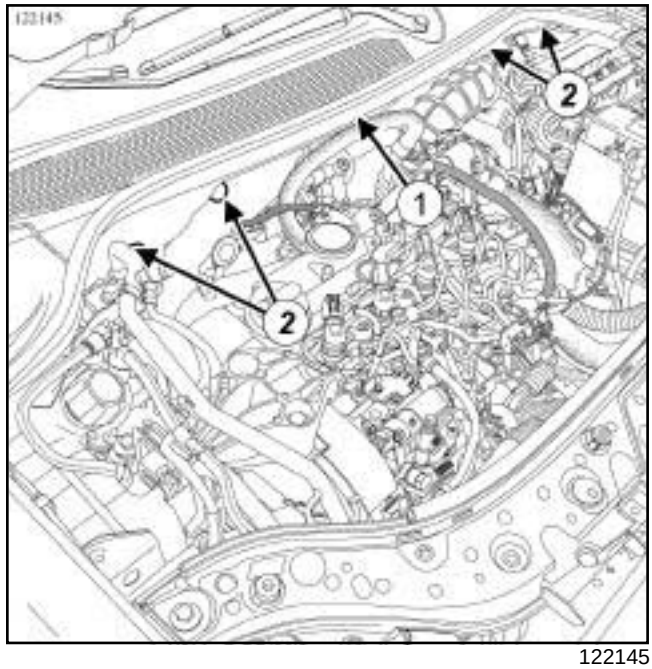

122145

❑ Remove:

- the acoustic protection bolt (**1**) ,
- the acoustic protection clips (**2**) ,
- the acoustic protection.

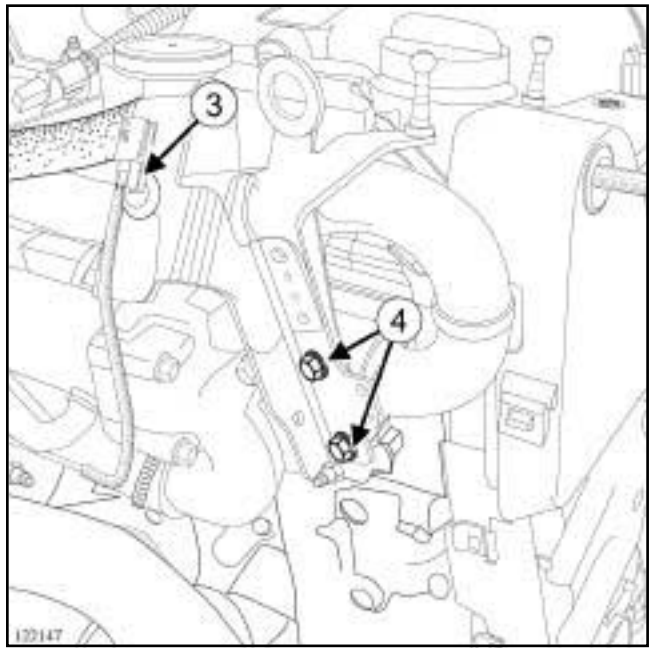

122147

❑ Detach the exhaust gas temperature sensor connector (**3**) from the lifting eye on the timing end.

❑ Remove:

- the bolts (**4**) from the lifting eye at the timing end,
- the timing end lifting eye,
- the air inlet metal tube,

K9K, and 734

- the engine undertray bolts,
- the engine undertray,
- the rear suspended engine mounting (see **19D**, **Engine mounting**, **Lower engine tie-bar: Removal - Refitting**, page **19D-36**) .

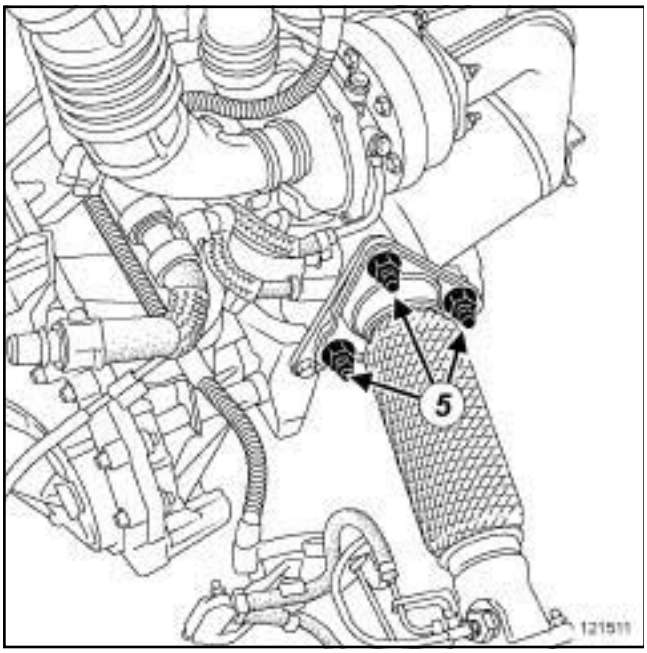

121511

❑ Remove the nuts (**5**) from the exhaust bracket.

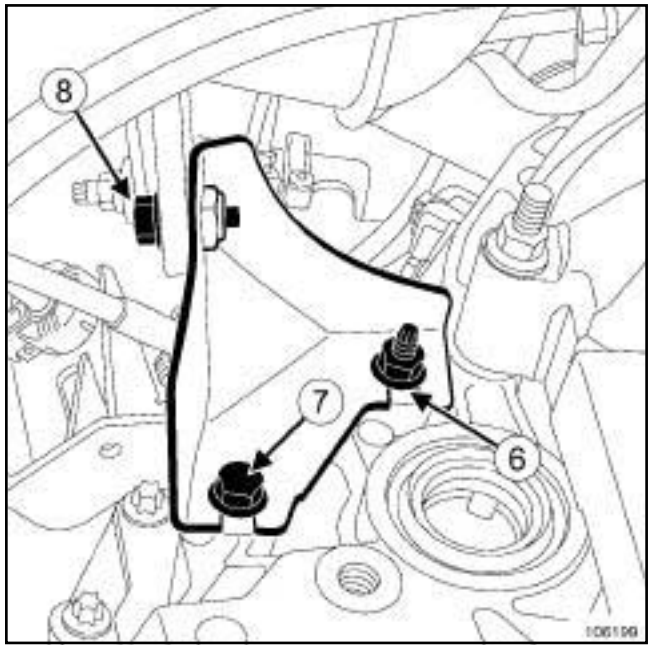

106199

❑ Undo:

- the gearbox downstream strut nut (**6**) ,
- the gearbox downstream strut bolt (**7**) .

❑ Remove:

- the catalytic pre-converter downstream strut bolt (**8**) ,
- the downstream strut

K9K, and 734

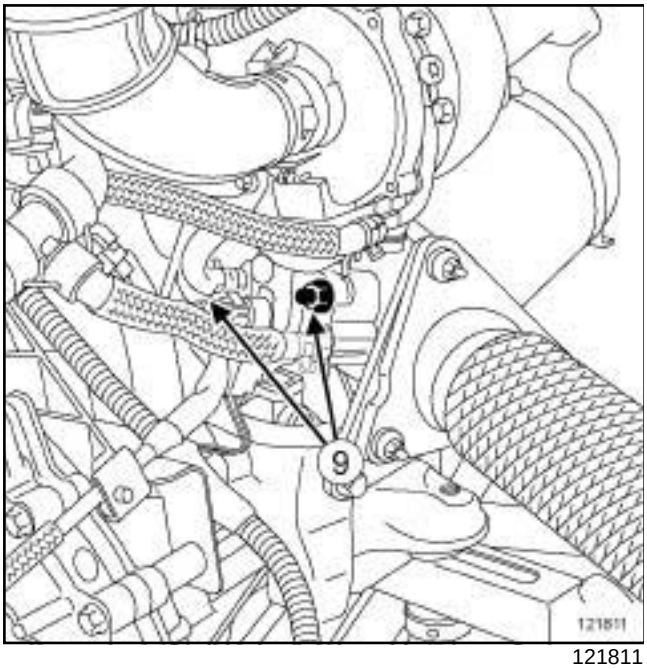

121811

❑ Remove the diesel injector cooler nuts (**9**) from the catalytic pre-converter.

❑ Remove the diesel injector cooler from the catalytic pre-converter.

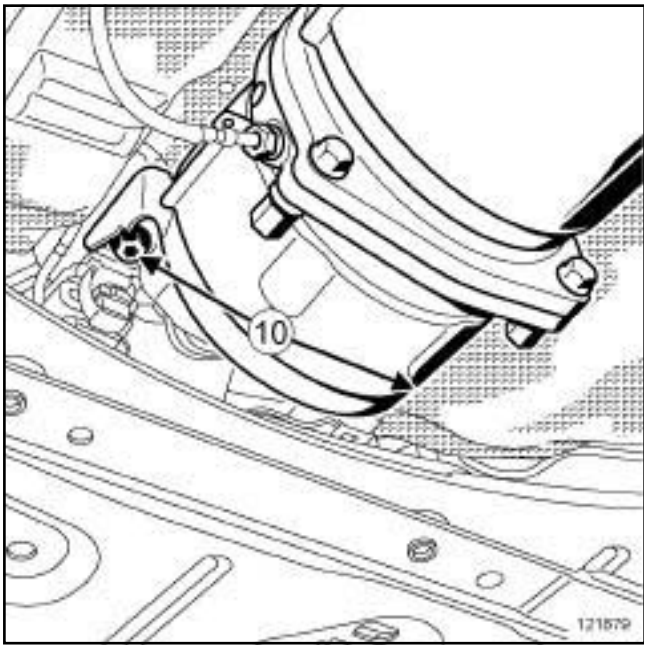

121879

❑ Remove the particle filter stud bolts (**10**) .

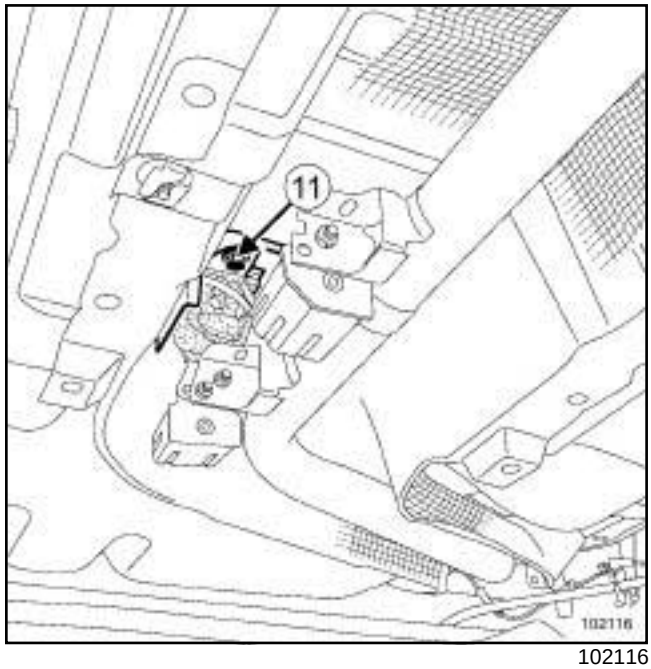

102116

❑ Remove the exhaust pipe rubber mounting bush bolt (**11**) on the body.

Note:

Use a pen to mark the position of the exhaust rubber mounting bush supports on the vehicle body.

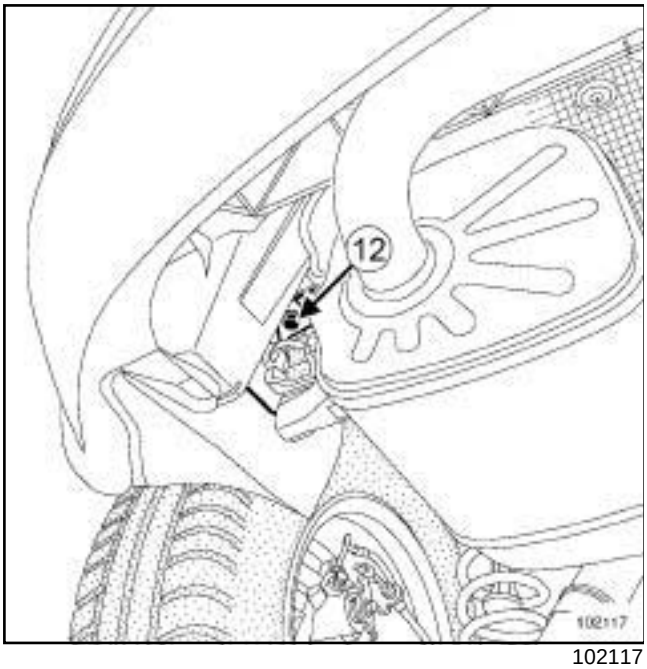

102117

❑ Remove the silencer rubber mounting bush bolt (**12**) .

❑ Withdraw the exhaust pipe towards the rear of the vehicle.

❑ Remove the exhaust bracket seal.

II - REMOVAL OPERATION FOR PART CONCERNED

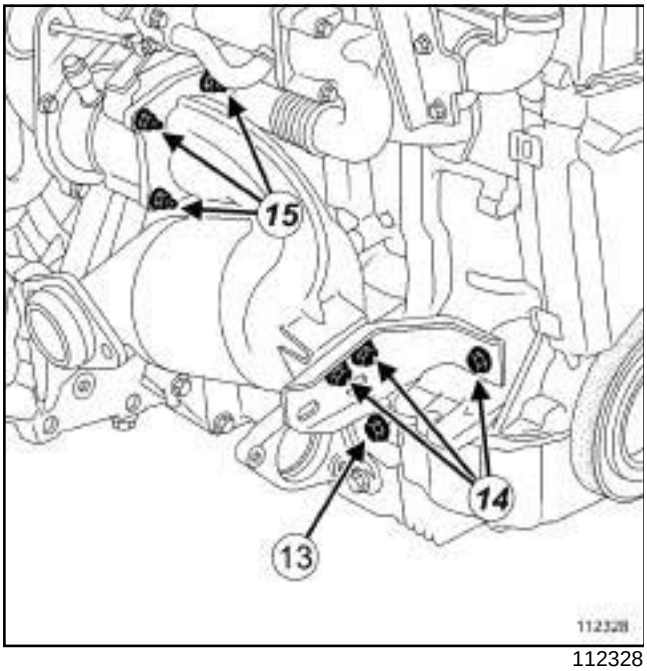

112328

❑ Undo the upstream strut bolt (**13**) .

❑ Remove:

- the upstream strut bolts (**14**) ,
- the upstream strut
- the catalytic pre-converter nuts (**15**) on the turbocharger,
- the catalytic pre-converter.

REFITTING

I - REFITTING PREPARATIONS OPERATION

❑ Use an abrasive pad to clean the bearing faces:

- on the catalytic pre-converter if they are to be reused,
- on the connection hose.

❑ Using **SURFACE CLEANER** and clean cloths, degrease the bearing faces:

II - REFITTING OPERATION FOR PART CONCERNED

❑ Refit:

- the new seal on the catalytic pre-converter,
- the catalytic pre-converter.
- the upstream strut

❑ Fit the upstream strut bolts on the engine without tightening them.

❑ Refit the downstream stay.

❑ In order, fit (without tightening):

- the downstream strut bolt on the gearbox,
- the gearbox downstream strut nut,
- the upstream strut bolts on the catalytic pre-converter,
- the downstream strut bolts on the catalytic pre-converter,
- the catalytic pre-converter nuts on the turbocharger.

❑ Torque tighten the **catalytic pre-converter nuts on the turbocharger (26 Nm)**.

K9K, and 734

❑ Tighten in order:

- the upstream stay bolts on the engine,
- the downstream strut bolt on the gearbox,
- the gearbox downstream strut nut,
- the upstream strut bolts on the catalytic pre-converter,
- the catalytic pre-converter downstream strut bolt.

> Note:
>
> Make sure there is no contact between the catalytic pre-converter and the turbocharger oil return pipe.

III - FINAL OPERATION.

❑ Refit the new exhaust bracket seal.

❑ Fit the exhaust pipe.

❑ Refit:

- the silencer rubber mounting bush bolt,
- the exhaust pipe rubber mounting bush bolt on the body,
- the particle filter stud bolts.

❑ Fit the diesel injector cooler on the catalytic pre-converter.

❑ Refit:

- the diesel injector cooler nuts on the catalytic pre-converter,
- the exhaust flange nuts,
- the rear suspended engine mounting (see **19D**, **Engine mounting**, **Lower engine tie-bar: Removal - Refitting**, page **19D-36**) ,
- the engine undertray,
- the engine undertray bolts,
- the air inlet metal tube,
- the timing end lifting eye,
- the timing end lifting eye bolts.

❑ CLip the exhaust gas temperature sensor connector onto the lifting eye on the timing end.

❑ Refit:

- the acoustic protection,
- the acoustic protection bolt,
- the acoustic protection clips,
- the scuttle panel grille (see **Scuttle panel grille: Removal - Refitting**) (MR 365, 56A, Exterior equipment),
- the engine cover.

❑ Connect the battery (see **Battery : Removal - Refitting**) (MR 364, 80A, Battery).

B84 or C84 or E84 or K84, and M9R, and 722 or 724

Essential equipment
safety strap(s)
roller-type stud removal tool

Tightening torques ▽	
lower engine tie-bar mounting bolts	**62 Nm**
the reinforcement lower cross member nuts	**62 Nm**

IMPORTANT
Wear heat protective gloves during the operation.

IMPORTANT
Wear protective gloves during the operation.

WARNING
To ensure that the exhaust pipe is correctly sealed, replace any loose adapters on the exhaust pipe.

REMOVAL

I - REMOVAL PREPARATION OPERATION

❑ Position the vehicle on a two-post lift (see **Vehicle: Towing and lifting**) (MR 364, 02A, Lifting equipment).

❑ Disconnect the battery (see **Battery: Removal - Refitting**) (MR 364, 80A, Battery).

❑ Remove:

- the engine cover,
- the front wiper arms (see **Windscreen wiper arm: Removal - Refitting**) (MR 364, 85A, Wiping - Washing),
- the scuttle panel grille (see **Scuttle panel grille: Removal - Refitting**) (MR 365, 56A, Exterior equipment),
- the acoustic protection clips on the scuttle panel partition,
- the acoustic protection,
- the engine undertray bolts,
- the engine undertray,
- the front right-hand wheel (see **Wheel: Removal - Refitting**) (MR 364, 35A, Wheels and tyres).

M9R, and 724

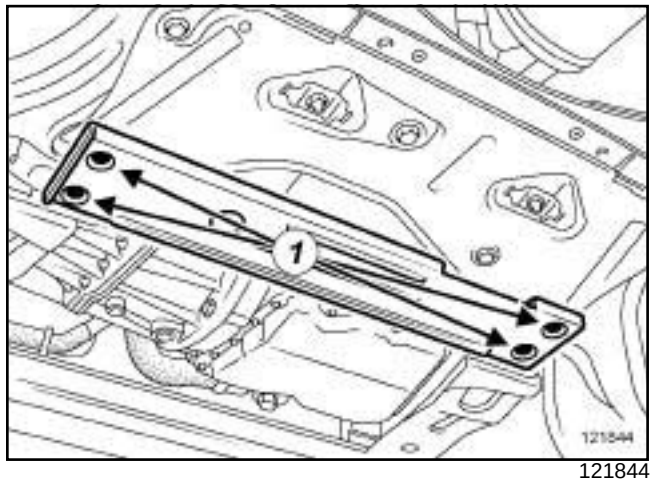

121844

❑ Remove:

- the reinforcement lower cross member nuts (**1**) ,
- the reinforcement lower cross member.

❑ Drain the manual gearbox (see **Manual gearbox oil: Draining - Refilling**) (MR 364, 21A, Manual gearbox).

❑ Remove:

- the front right-hand driveshaft (see **Front right-hand wheel driveshaft: Removal - Refitting**) (MR 364, 29A, Driveshafts),
- the lower engine tie-bar (see **19D**, **Engine mounting**, **Lower engine tie-bar: Removal - Refitting**, page **19D-36**) ,
- the lower engine tie-bar mounting bolts,
- the lower engine tie-bar mounting.

B84 or C84 or E84 or K84, and M9R, and 722 or 724

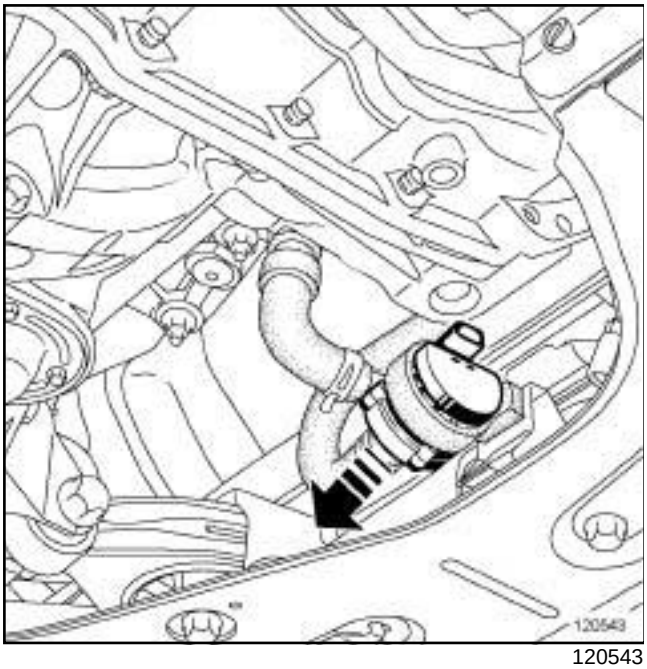

120543

❑ Remove the electric coolant pump from its mounting.

II - REMOVAL OPERATION FOR PART CONCERNED

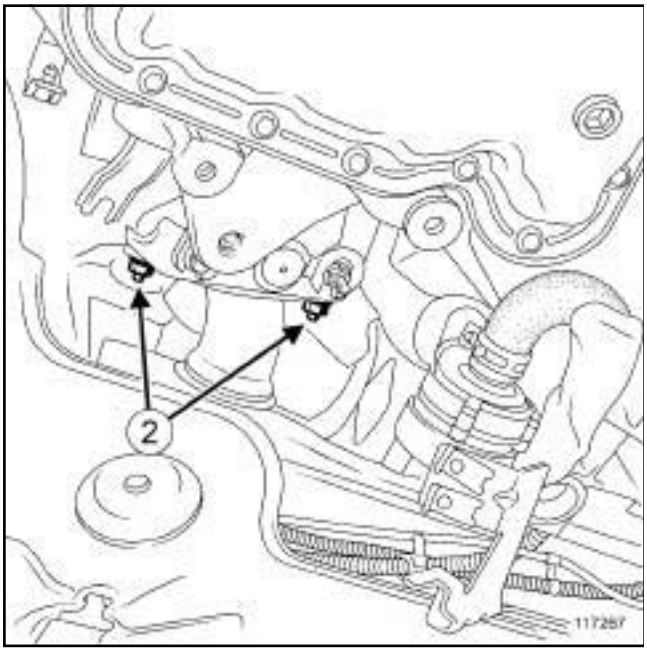

117267

❑ Remove the connecting hose nuts (**2**) .

❑ Remove the connecting hose from the catalytic pre-converter.

❑ Remove the seal between the connecting hose and the catalytic pre-converter.

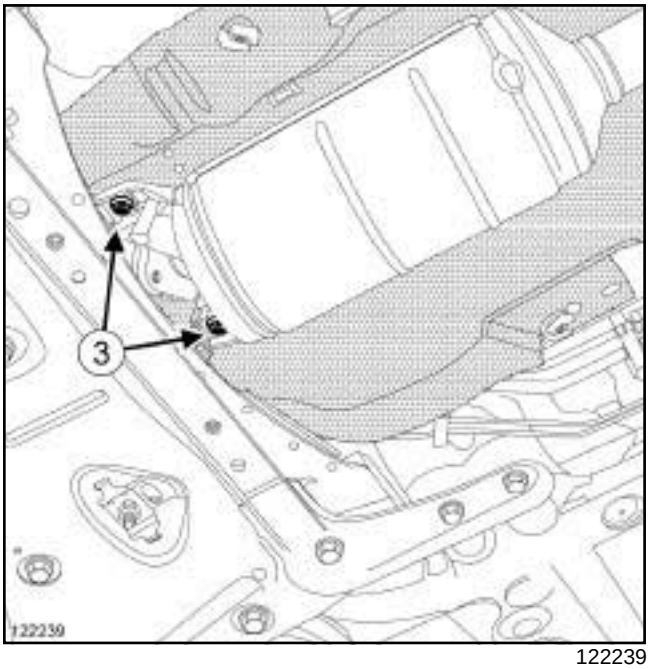

122239

❑ Remove the particle filter rubber mounting bush bolts (**3**) .

B84 or C84 or E84 or K84, and M9R, and 722 or 724

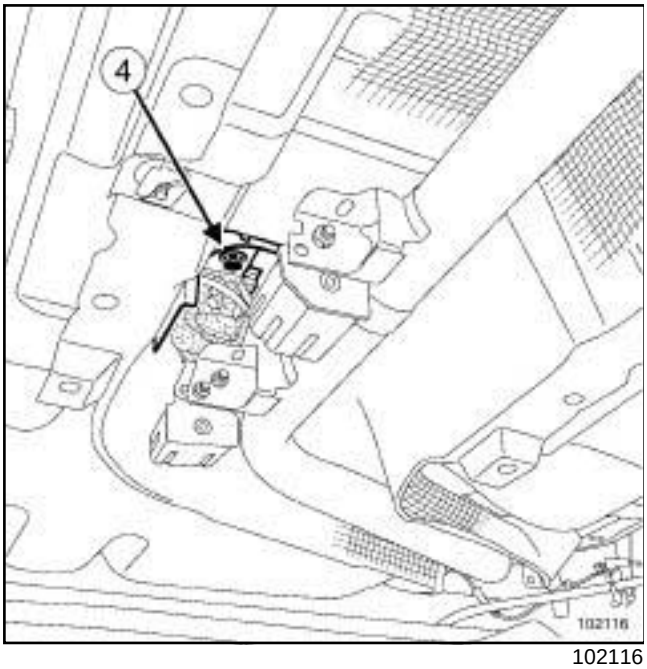

102116

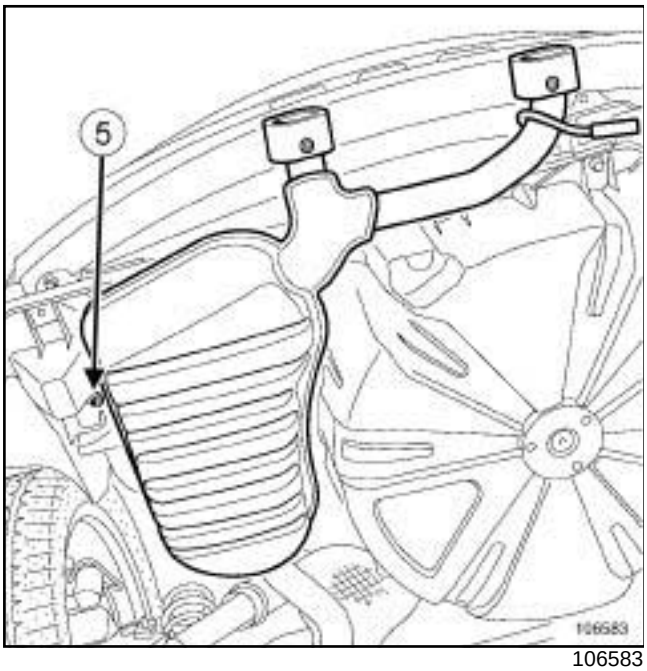

106583

❑

> Note:
>
> If the rubber mounting bushes are damaged, mark the position of the support on the body, then replace the « support - rubber mounting bush » assembly.

❑ Remove the bolts (**4**) and (**5**) from the intermediate pipe and silencer rubber mounting bushes.

❑ Move the « particle filter - intermediate pipe - silencer » assembly towards the rear.

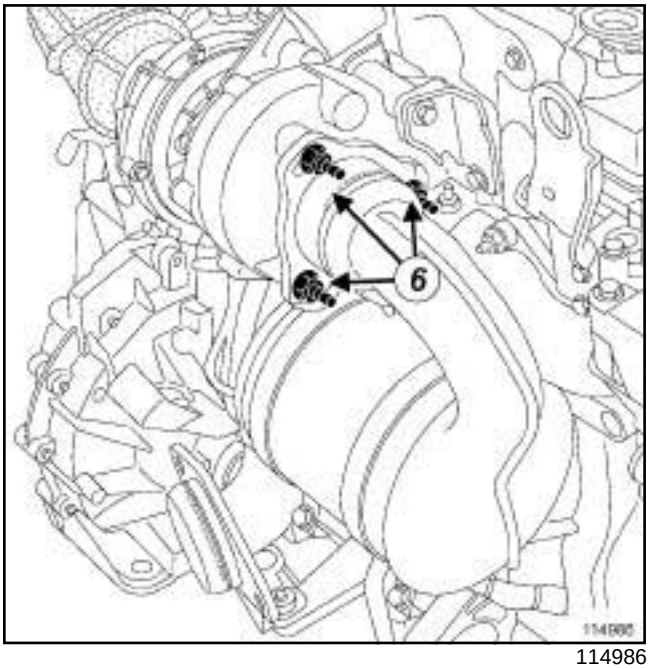

114986

❑ Remove the nuts (**6**) from the catalytic pre-converter on the turbocharger.

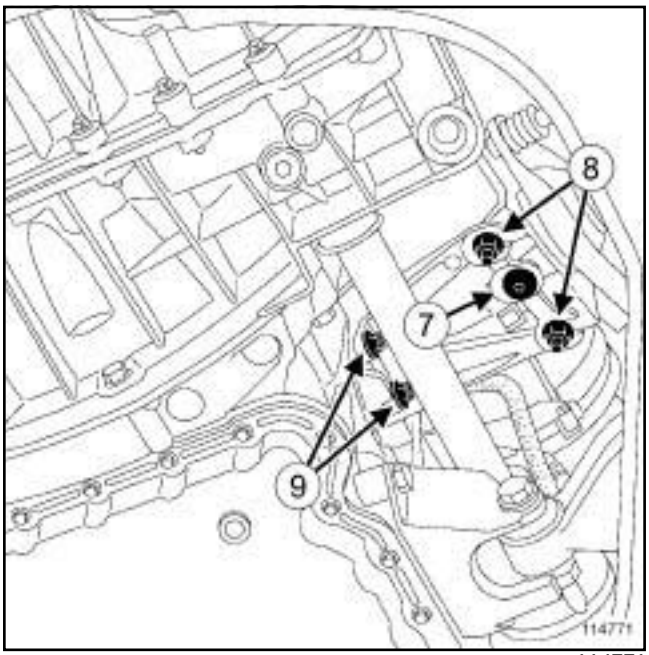

114771

❑ Remove:

- the stay bolt (**7**) on the catalytic pre-converter,
- the stay nuts (**8**) on the catalytic pre-converter,
- the cylinder block strut nuts (**9**) ,
- the catalytic pre-converter stay.

B84 or C84 or E84 or K84, and M9R, and 722 or 724

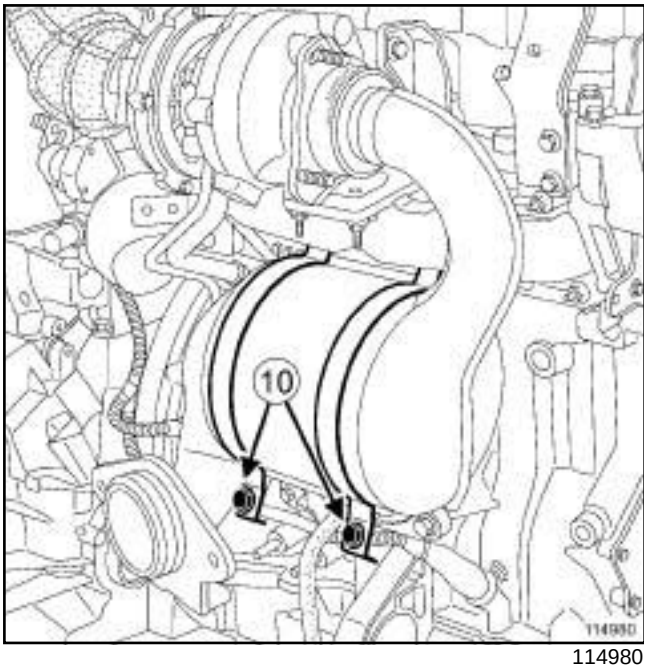

114980

❑ Remove:

- the bolts (**10**) from the catalytic pre-converter half-clips,
- the catalytic pre-converter half-clips.

❑ Remove the catalytic pre-converter at the timing end.

❑ Remove the seal between the catalytic pre-converter and the turbocharger.

❑ Fit the catalytic pre-converter using a **safety strap(s)** to the timing end lifting eye.

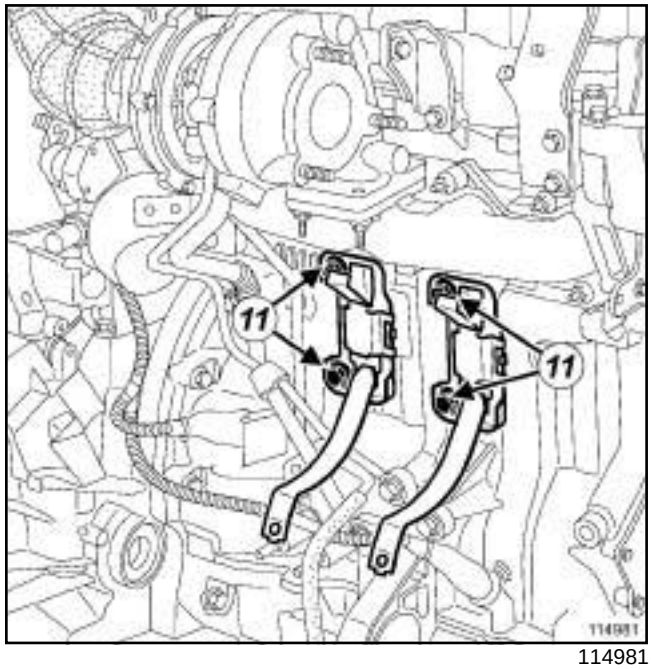

114981

❑ Remove:

- the catalytic pre-converter mounting clip bolts (**11**) ,
- the catalytic pre-converter mounting clips.

❑ Remove the **safety strap(s)**.

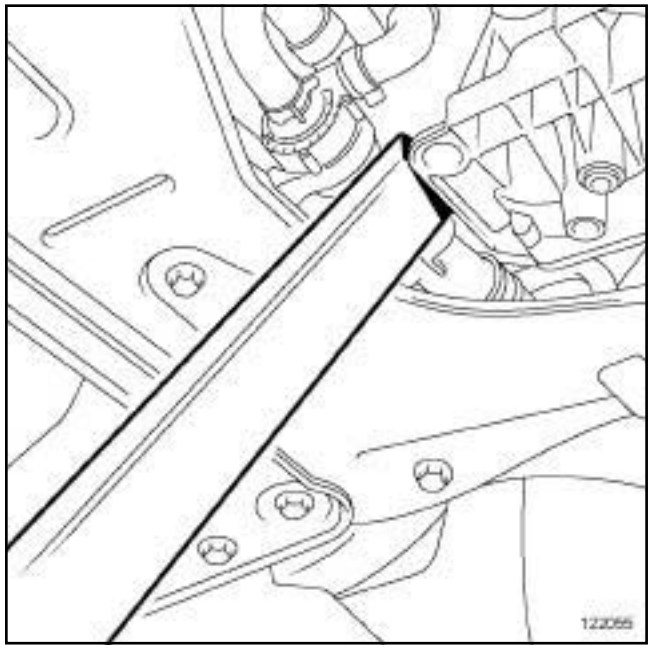

122055

❑ Tilt the engine forwards with a strut.

B84 or C84 or E84 or K84, and M9R, and 722 or 724

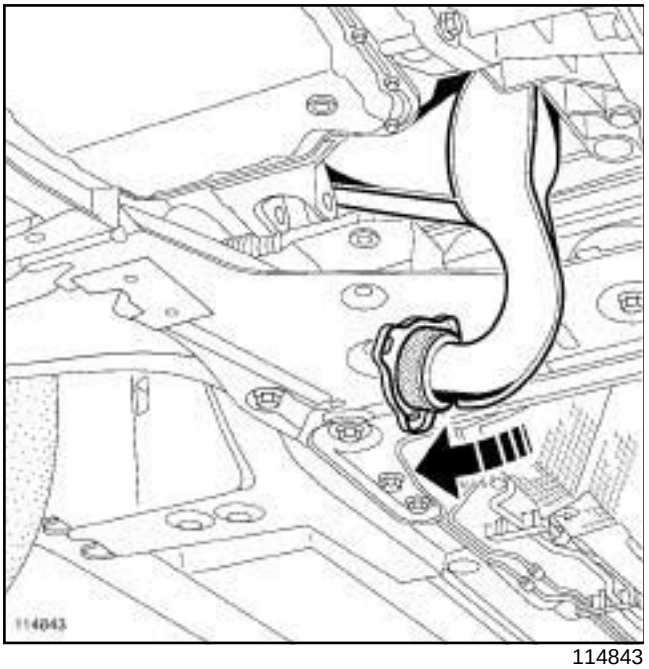

114843

❑ Remove the catalytic pre-converter.

REFITTING

I - REFITTING PREPARATIONS OPERATION

❑

> **WARNING**
> Any damaged heat shields must be replaced.

> **WARNING**
> To prevent the surrounding components from overheating, do not damage (tear, pierce bend etc.) a heat shield.
>
> All damaged heat shields must be replaced.

❑ Clean and degrease the bearing faces:

- on the catalytic pre-converter if they are to be reused,
- the turbocharger,

❑ Remove the turbocharger studs using a **roller-type stud removal tool**.

❑ Refit:

- the new turbocharger studs using a **roller-type stud removal tool**,
- the catalytic pre-converter mounting clips on the cylinder block,
- the catalytic pre-converter mounting clip bolts on the cylinder block.

II - REFITTING OPERATION FOR PART CONCERNED

❑ Tilt the engine forwards.

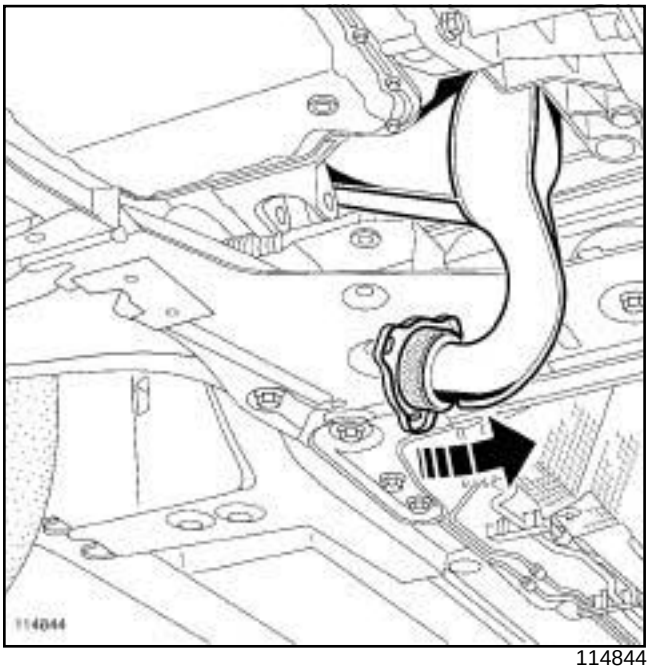

114844

❑ Fit:

- the new seal between the catalytic pre-converter and the turbocharger,
- the catalytic pre-converter on the turbocharger.

> **IMPORTANT**
> Wear protective gloves during the operation.

❑ Refit:

- the catalytic pre-converter half-clips,
- the catalytic pre-converter half-clip bolts.

❑ Fit the « particle filter - intermediate pipe - silencer » assembly.

❑ Refit:

- the intermediate pipe rubber mounting bush bolts,
- the silencer bolts,
- the particle filter rubber mounting bush bolts,
- the seal between the connecting hose and the catalytic pre-converter,

❑ Position the connecting hose on the catalytic pre-converter.

❑ Refit:

- the nuts between the connecting hose and the catalytic pre-converter,

B84 or C84 or E84 or K84, and M9R, and 722 or 724

- the catalytic pre-converter stay,
- the cylinder block strut nuts,
- the stay nuts on the catalytic pre-converter,
- the strut bolt on the catalytic pre-converter,
- the catalytic pre-converter nuts on the turbocharger.

III - FINAL OPERATION.

❑ Fit the electric coolant pump onto its mounting.

❑ Refit:

- the lower engine tie-bar mounting,
- the lower engine tie-bar mounting bolts.

❑ Torque tighten the **lower engine tie-bar mounting bolts (62 Nm)**.

❑ Refit:

- the lower engine tie-bar (see **19D**, **Engine mounting**, **Lower engine tie-bar: Removal - Refitting**, page **19D-36**) ,
- the front right-hand driveshaft (see **Front right-hand wheel driveshaft: Removal - Refitting**) (MR 364, 29A, Driveshafts).

❑ Fill the manual gearbox (see **Manual gearbox oil: Draining - Refilling**) (MR 364, 21A, Manual gearbox).

M9R, and 724

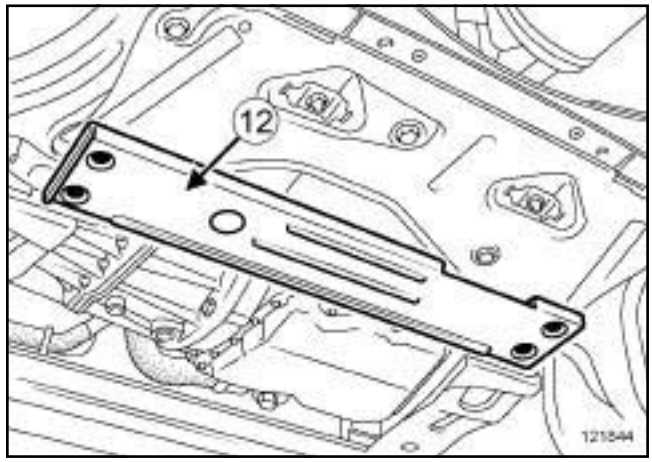

121844

❑

Note:

Position the cut (**12**) of the reinforcement lower cross member on the gearbox side.

❑ Refit:

- the reinforcement lower cross member,
- the reinforcement lower cross member nuts,

❑ Torque tighten **the reinforcement lower cross member nuts (62 Nm)**.

❑ Refit:

- the front right-hand wheel (see **Wheel: Removal - Refitting**) (MR 364, 35A, Wheels and tyres).
- the engine undertray,
- the engine undertray bolts,
- the acoustic protection,
- the acoustic protection clips on the scuttle panel partition,
- the scuttle panel grille (see **Scuttle panel grille: Removal - Refitting**) (MR 365, 56A, Exterior equipment),
- the front wiper arms (see **Windscreen wiper arm: Removal - Refitting**) (MR 364, 85A, Wiping - Washing),
- the engine cover.

❑ Connect the battery (see **Battery: Removal - Refitting**) (MR 364, 80A, Battery).

Catalytic converter: Removal - Refitting

B84 or C84 or G84 or S84, and F4R, and 770 or 771 or 776 – B84 or C84 or G84 or S84, and K4J – B84 or C84 or G84 or S84, and K4M

Essential special tooling	
Mot. 1495-01	22 mm socket for removing/ refitting oxygen sensors.

Tightening torques ▽	
oxygen sensor	**45 Nm**
exhaust bracket studs	**7 Nm**
exhaust bracket nuts	**21 Nm**

REMOVAL

❑ Position the vehicle on a two-post lift (see **Vehicle: Towing and lifting**) (MR 364, 02A, Lifting equipment).

❑ Disconnect the battery (see **Battery: Removal - Refitting**) (MR 364, 80A, Battery).

❑ Remove the engine undertray.

F4R, and 770 or 771 – K4J, and 730 or 732 – K4M, and 760 or 761 or 812 or 813

❑ Remove the downstream oxygen sensor (see **19B**, **Exhaust**, **Exhaust: Parts and consumables for the repair work**, page **19B-6**) (MR 364, 19B, Exhaust).

❑ Cut the exhaust pipe (see **19B**, **Exhaust**, **Exhaust: Precautions for repair**, page **19B-1**)

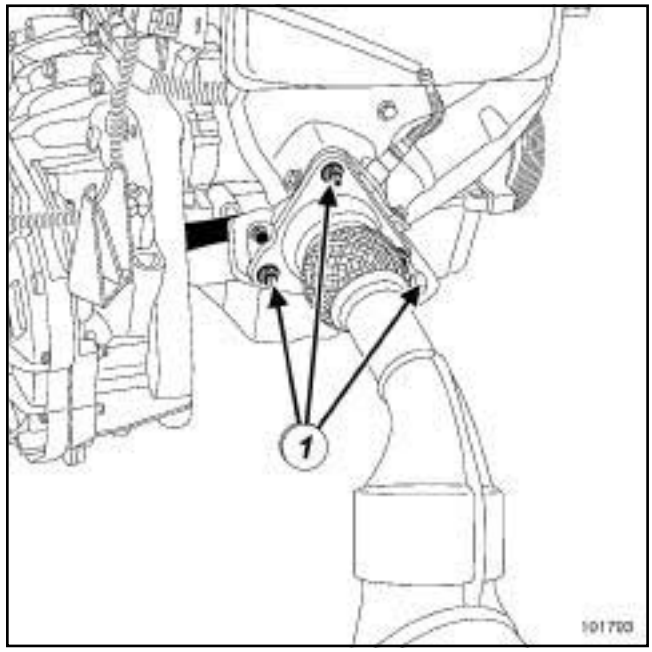

101793

❑ Remove:

- the exhaust bracket mounting nuts (**1**) ,
- the catalytic converter.

REFITTING

❑

Note:

Any damaged heat shields must be replaced.

❑ Refit the downstream oxygen sensor.

❑ Torque tighten the **oxygen sensor (45 Nm)** using the **(Mot. 1495-01)**.

❑ Refit and tighten to torque if necessary the **exhaust bracket studs (7 Nm)**.

❑ Fit:

- the catalytic converter,
- the sleeve (see **19B**, **Exhaust**, **Exhaust: Parts and consumables for the repair work**, page **19B-6**) (MR 364, 19B, Exhaust).

❑ Proceed in the reverse order to removal.

Note:

Always replace:

- the exhaust bracket seal.
- all disconnected plastic air inlet pipes.

B84 or C84 or G84 or S84, and F4R, and 770 or 771 or 776 – B84 or C84 or G84 or S84, and K4J – B84 or C84 or G84 or S84, and K4M

- ❑ Torque tighten the **exhaust bracket nuts (21 Nm)**.
- ❑ Tighten the sleeve while relieving the exhaust to ensure alignment.
- ❑ Connect the oxygen sensor.
- ❑ Make sure that all the exhaust pipe heat shields are in place and properly secured.
- ❑ Refit the engine undertray.
- ❑ Make sure that there is no contact with the underbody.
- ❑ Connect the battery (see **Battery : Removal - Refitting**) (MR 364, 80A, Battery).

B84 or C84 or G84 or S84, and F9Q, and 800 or 808

Tightening torques ▽	
catalytic converter mounting nuts on the turbocharger	**30 Nm**
catalytic converter stay nut (timing end)	**30 Nm**
catalytic converter strut mounting bolt (timing end)	**44 Nm**
catalytic converter stay mounting nut (flywheel end)	**21 Nm**
exhaust bracket studs (at the catalytic converter outlet)	**7 Nm**
exhaust bracket nuts (at the catalytic converter outlet)	**21 Nm**
exhaust pipe mounting bolt (on the body)	**21 Nm**
battery cover mounting bolts	**4 Nm**
wheel mounting bolts	**110 Nm**

REMOVAL

❑ Position the vehicle on a two-post lift.

❑ Disconnect the battery (see **Battery: Removal - Refitting**) (MR 364, 80A, Battery).

❑ Remove:

- the front right-hand wheel,
- the engine undertray.

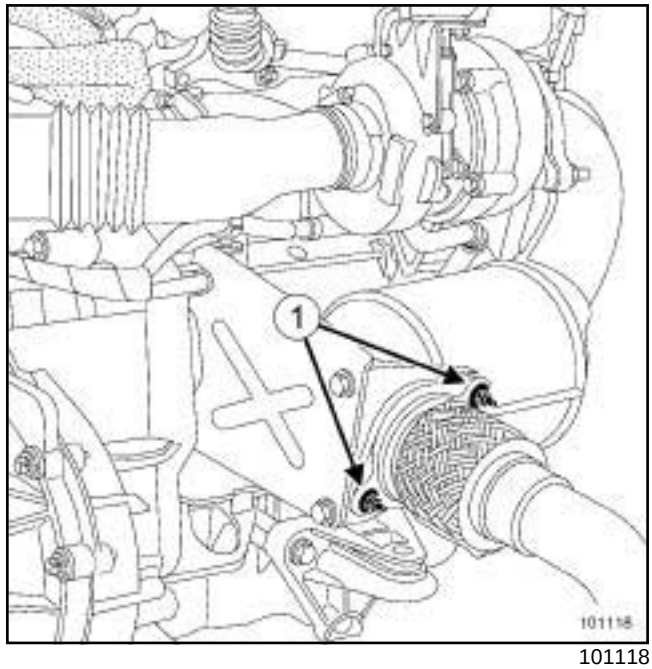

101118

❑ Remove the exhaust bracket nuts (**1**) (at the outlet of the catalytic converter).

Note:

Mark with a pen the position of the exhaust rubber mounting bush supports on the vehicle body.

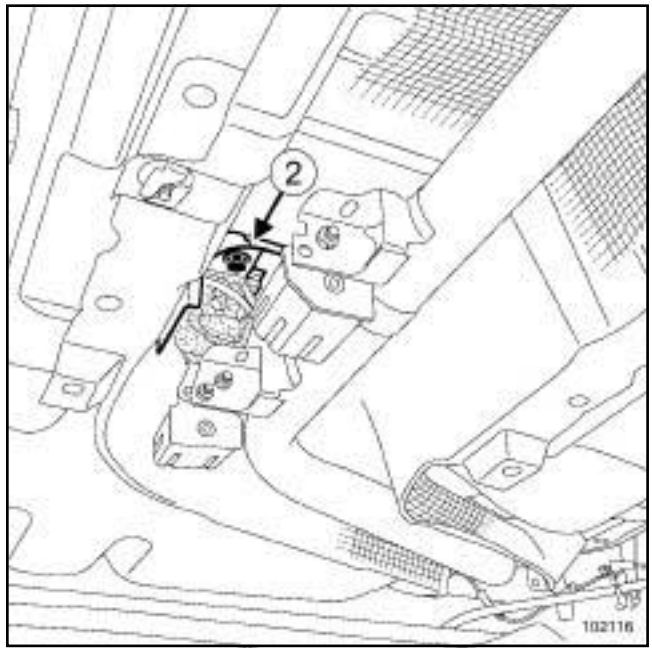

102116

❑ Remove the exhaust pipe rubber mounting bush bolt (**2**) from the body.

B84 or C84 or G84 or S84, and F9Q, and 800 or 808

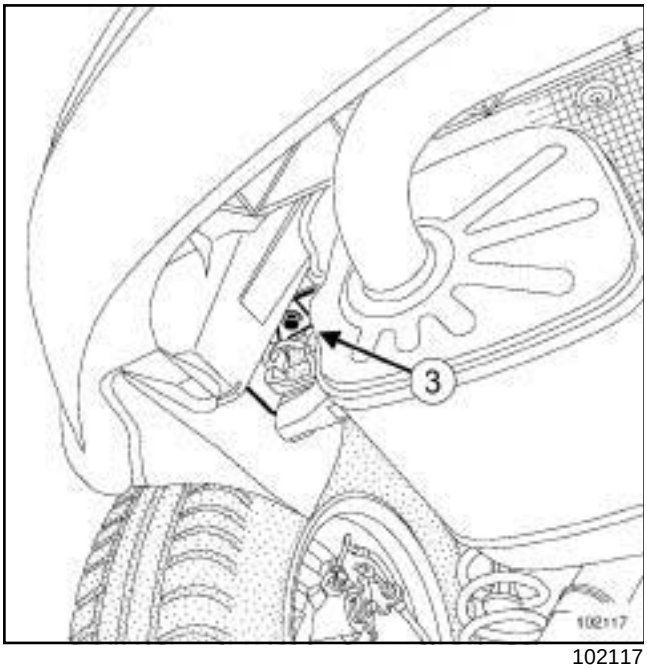

102117

❑ Remove the silencer rubber mounting bush bolt (**3**) .

❑ Withdraw the exhaust pipe towards the rear of the vehicle.

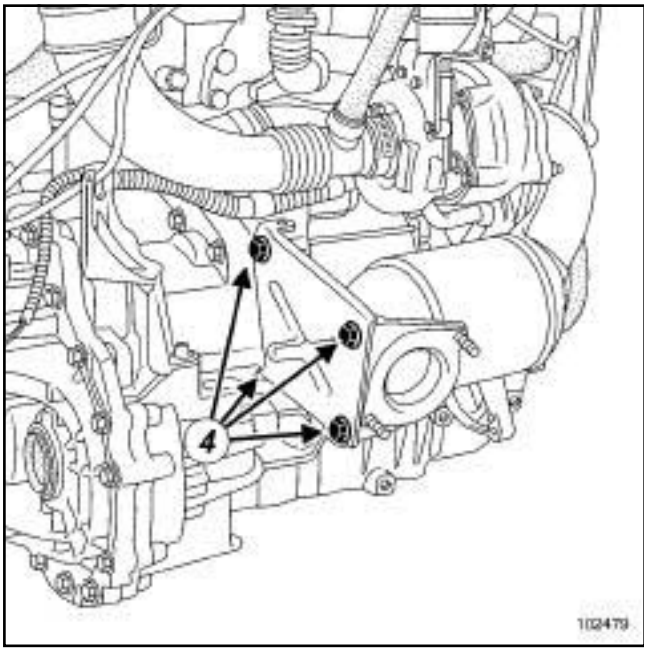

102479

❑ Remove the catalytic converter strut mounting bolts (**4**) (flywheel end).

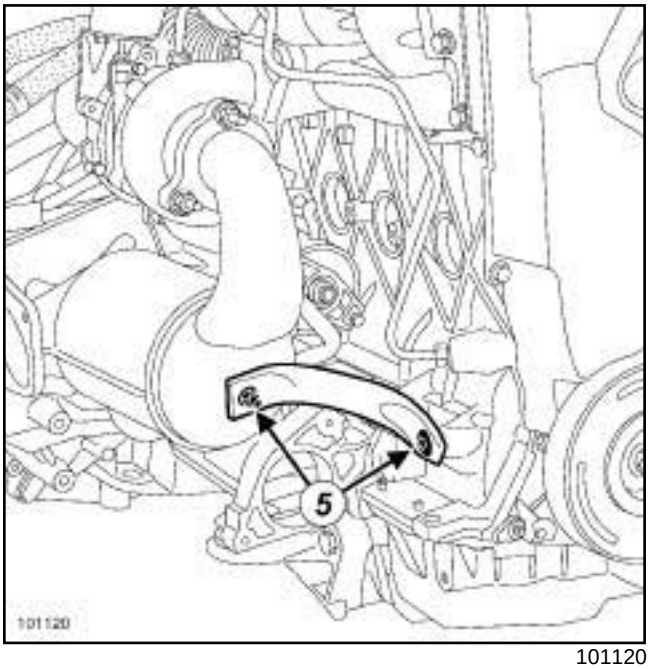

101120

❑ Remove:

- the catalytic converter strut mounting bolts (**5**) (timing end),
- the catalytic converter strut (timing end).

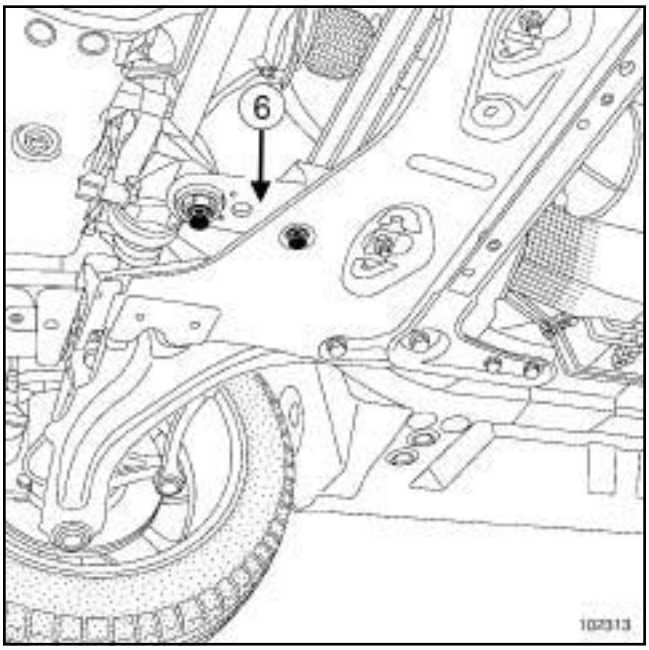

102313

❑ Remove the engine tie-bar (**6**) .

B84 or C84 or G84 or S84, and F9Q, and 800 or 808

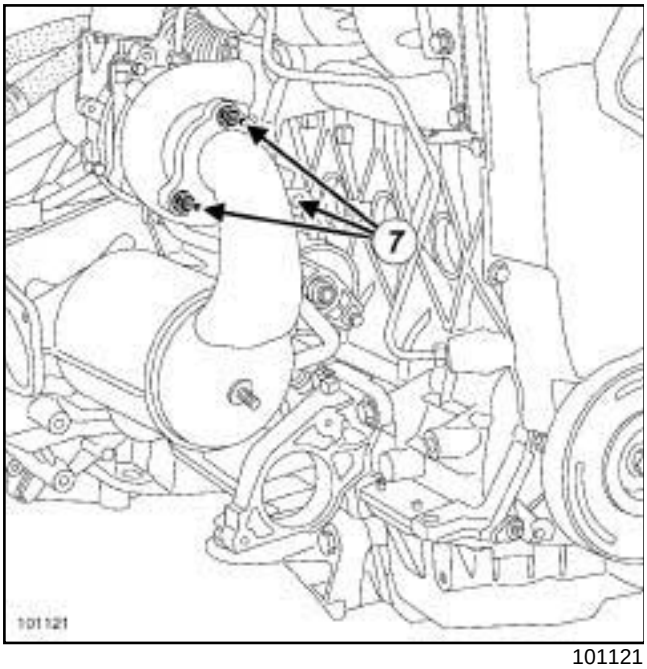

101121

❑ Remove:

- the engine lifting bracket,
- the nuts (**7**) mounting the catalytic converter to the turbocharger,
- the catalytic converter from the underbody of the vehicle.

REFITTING

❑

> **WARNING**
> Do not reuse a used sleeve.
>
> The « sleeve tightening nuts and bolts » assembly must be positioned so that they cannot come into contact with the underbody.
>
> Any damaged heat shields must be replaced.

❑ The order for fitting catalytic converter stays must be respected.

> **WARNING**
> The seals must always be replaced.

❑ Tighten in order and until contact:

- catalytic converter strut mounting bolts (timing end),
- strut mounting bolts (flywheel end),
- the catalytic converter nuts on the turbocharger,

❑ Torque tighten the **catalytic converter mounting nuts on the turbocharger (30 Nm)**.

Refitting the strut at the timing end

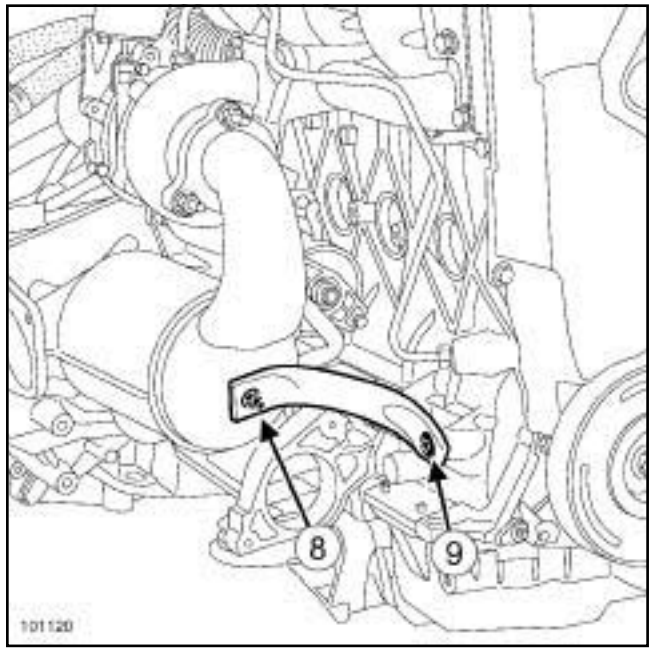

101120

❑ Torque tighten and in order:

- the **catalytic converter stay nut (timing end) (30 Nm)** (**8**) ,
- the **catalytic converter strut mounting bolt (timing end) (44 Nm)** (**9**) .

B84 or C84 or G84 or S84, and F9Q, and 800 or 808

Refitting the strut at the timing end

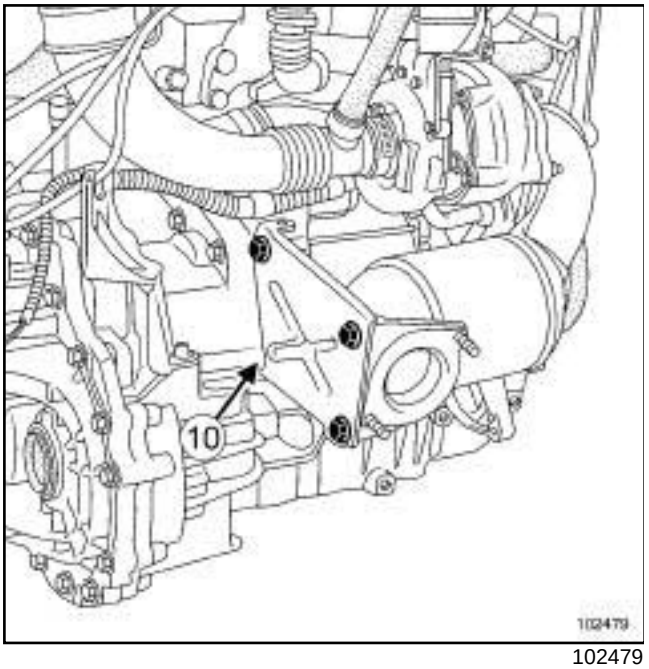

102479

- Tighten to torque and in order the **catalytic converter stay mounting nut (flywheel end) (21 Nm)** (**10**) .

> Note:
>
> Make sure there is no contact between the catalytic converter and the turbocharger oil return pipe.

- Proceed in the reverse order to removal.
- Torque tighten:
  - the **exhaust bracket studs (at the catalytic converter outlet) (7 Nm)**.
  - the **exhaust bracket nuts (at the catalytic converter outlet) (21 Nm)**,
  - the **exhaust pipe mounting bolt (on the body) (21 Nm)**.
- Refit the lower engine tie-bar (see **19D**, **Engine mounting**, **Lower engine tie-bar: Removal - Refitting**, page **19D-36**) .
- Make sure that all the exhaust pipe heat shields are in place and properly secured.
- Make sure that there is no contact with the underbody.
- Connect the battery (see **Battery : Removal - Refitting**) (MR 364, 80A, Battery).
- Torque tighten:
  - the **battery cover mounting bolts (4 Nm)**,
  - the **wheel mounting bolts (110 Nm)**.

Catalytic converter: Removal - Refitting

B84 or C84 or G84 or S84, and K9K, and 722 or 724 or 728 or 729 or 732

Tightening torques ▽	
turbocharger outlet studs	**7 Nm**
catalytic converter mounting nuts on the turbocharger	**26 Nm**
bolts mounting the upstream stay on the engine	**44 Nm**
bolts mounting the downstream stay on the gearbox	**21 Nm**
catalytic converter upstream strut mounting bolt	**25 Nm**
catalytic converter downstream strut mounting bolt	**21 Nm**
exhaust pipe mounting bolt on the body	**21 Nm**
catalytic converter outlet exhaust bracket studs	**7 Nm**
exhaust bracket nuts	**21 Nm**
bolts on the ball joint bracket fitted with their springs	**21 Nm**
battery cover mounting bolts	**4 Nm**

REMOVAL

❑ Position the vehicle on a two-post lift.

❑ Disconnect the battery (see **Battery: Removal - Refitting**) (MR 364, 80A, Battery).

❑ Remove the engine undertray.

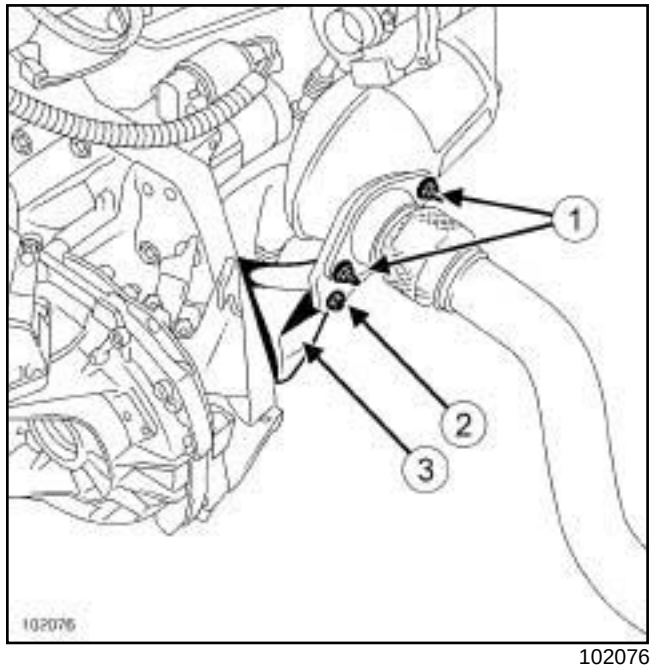

102076

❑ Remove:

- the exhaust bracket mounting bolts (**1**) ,
- the catalytic converter strut mounting bolt (**2**) .

❑ Loosen the other stay mountings on the gearbox.

❑ Remove the stay (**3**) .

B84 or C84 or G84 or S84, and K9K, and 722 or 724 or 728 or 729 or 732

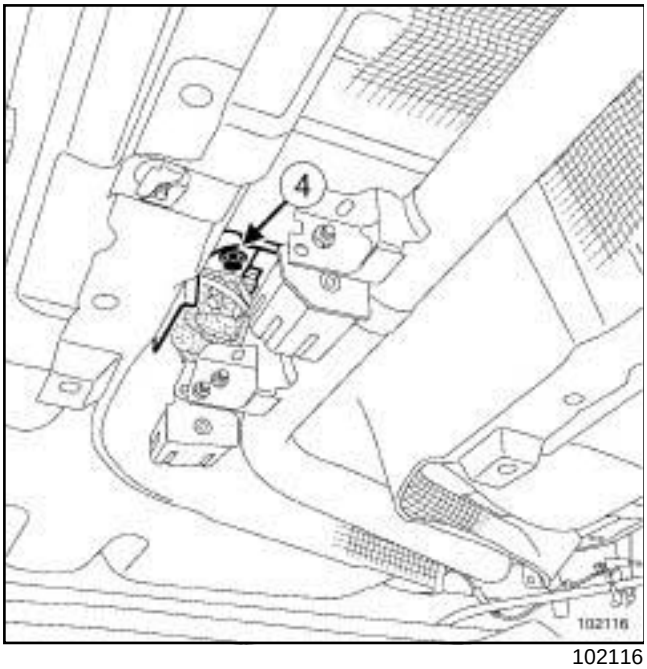

102116

❑ Remove the exhaust pipe rubber mounting bush bolt (**4**) from the body.

> Note:
>
> Mark with a pen the position of the exhaust silentbloc supports on the vehicle body.

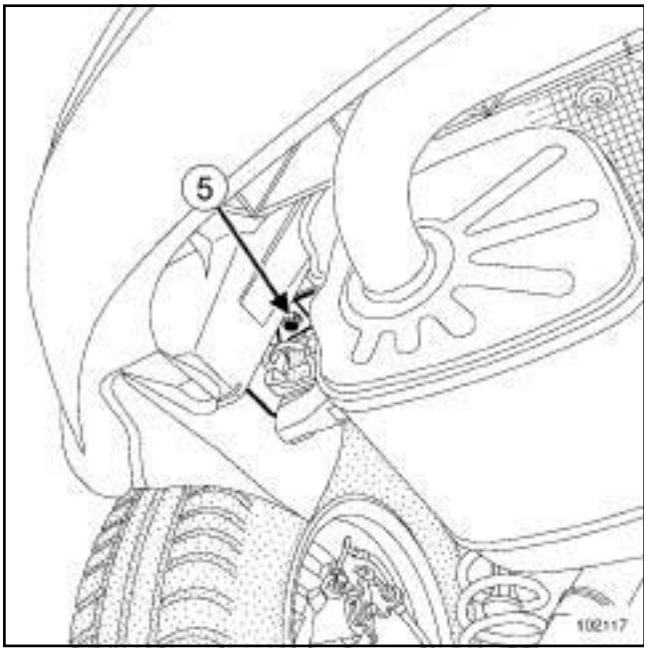

102117

❑ Remove the silencer rubber mounting bush bolt (**5**) .

❑ Withdraw the exhaust pipe towards the rear of the vehicle.

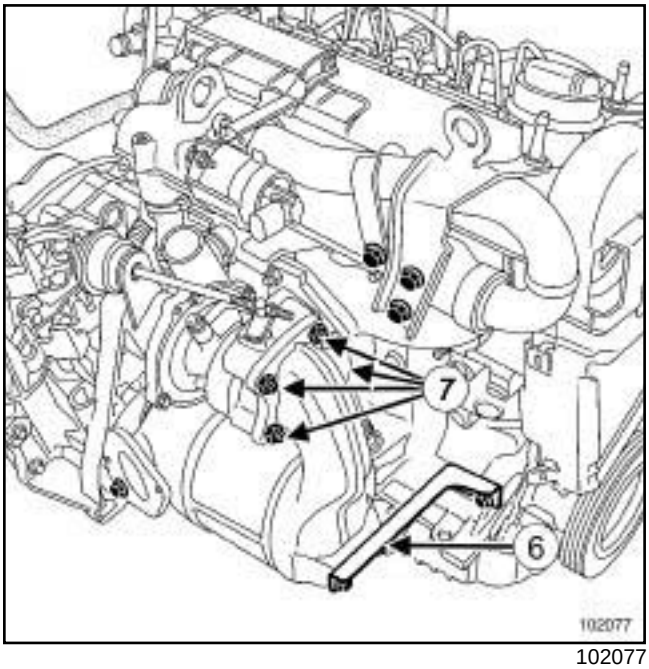

102077

❑ Remove:

- the catalytic converter upstream stay mounting bolts,
- the catalytic converter strut (**6**) ,
- the nuts (**7**) mounting the catalytic converter to the turbocharger,
- the catalytic converter.

B84 or C84 or G84 or S84, and K9K, and 722 or 724 or 728 or 729 or 732

REFITTING

❑

> **WARNING**
>
> Always replace:
>
> - the catalytic converter seal,
> - the turbocharger - catalytic converter bracket studs.

Torque tighten the **turbocharger outlet studs (7 Nm)**.

❑ Fit the catalytic converter.

❑ Pretighten in order:

- the upstream strut bolts on the engine,
- the upstream strut bolts on the catalytic converter,
- the downstream strut bolts on the gearbox,
- the downstream stay bolts on the catalytic converter,
- the catalytic converter/turbocharger mounting nuts.

❑ Tighten to torque and in order

- the **catalytic converter mounting nuts on the turbocharger (26 Nm)**,
- the **bolts mounting the upstream stay on the engine (44 Nm)**,
- the **bolts mounting the downstream stay on the gearbox (21 Nm)**,
- the **catalytic converter upstream strut mounting bolt (25 Nm)**,
- the **catalytic converter downstream strut mounting bolt (21 Nm)**,
- the **exhaust pipe mounting bolt on the body (21 Nm)**.

> Note:
>
> Make sure there is no contact between the catalytic converter and the turbocharger oil return pipe.

K9K, and 722 or 728 or 729

❑ Torque tighten:

- the **catalytic converter outlet exhaust bracket studs (7 Nm)**,
- the **exhaust bracket nuts (21 Nm)**.

K9K, and 724 or 732

❑ Torque tighten the **bolts on the ball joint bracket fitted with their springs (21 Nm)**.

❑ Proceed in the reverse order to removal.

❑ Refit the engine undertray.

❑ Make sure that there is no contact with the underbody.

> **WARNING**
>
> Any damaged heat shields must be replaced.

❑ Connect the battery (see **Battery : Removal - Refitting**) (MR 364, 80A, Battery).

❑ Torque tighten the **battery cover mounting bolts (4 Nm)**.

Catalytic converter: Removal - Refitting

B84 or C84 or E84 or K84 or L84, and M9R, and 700

Essential equipment
roller-type stud removal tool
safety strap(s)

Tightening torques ▽	
studs on the turbocharger	**14.5 Nm**
catalytic converter mounting clip bolts on the cylinder block	**21 Nm**
the studs on the catalytic converter	**19.5 Nm**
catalytic converter nuts on the turbocharger	**21 Nm**
catalytic converter half-clip bolts	**21 Nm**
catalytic converter stay bolt	**8 Nm**
stay nuts on the cylinder block	**21 Nm**
catalytic converter stay nut	**21 Nm**
ball jointed bracket bolts with their springs	**21 Nm**
silencer rubber mounting bush bolt	**21 Nm**
exhaust pipe rubber mounting bush bolt	**21 Nm**

IMPORTANT
Wear protective gloves during the operation.

REMOVAL

I - REMOVAL PREPARATION OPERATION

❑ Position the vehicle on a two-post lift (see **Vehicle: Towing and lifting**) (MR 364, 02A, Lifting equipment).

❑ Disconnect the battery (see **Battery: Removal - Refitting**) (MR 364, 80A, Battery).

❑ Remove:

- the engine covers,
- the scuttle panel grille (see **Scuttle panel grille: Removal - Refitting**) (MR 365, 56A, Exterior equipment),
- the acoustic protection clips on the scuttle panel partition,
- the acoustic protection.

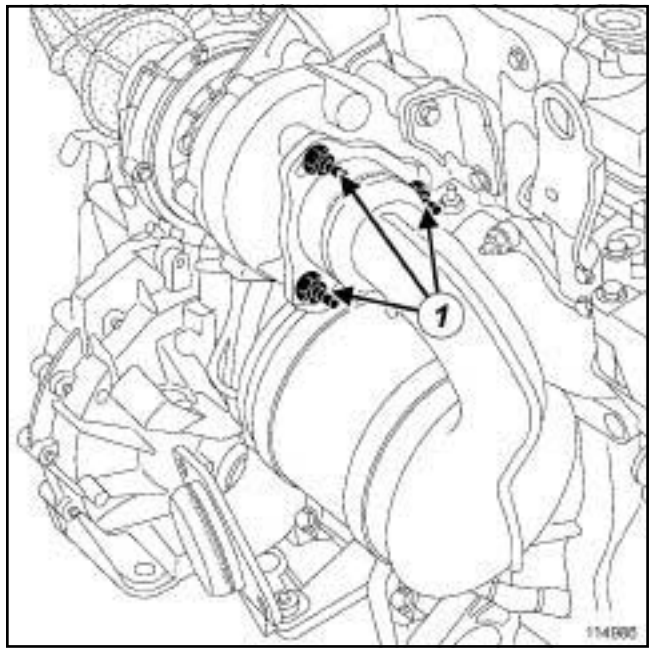

114986

❑ Remove:

- the catalytic converter nuts (**1**) on the turbocharger,
- the engine undertray bolts,
- the engine undertray.

B84 or C84 or E84 or K84 or L84, and M9R, and 700

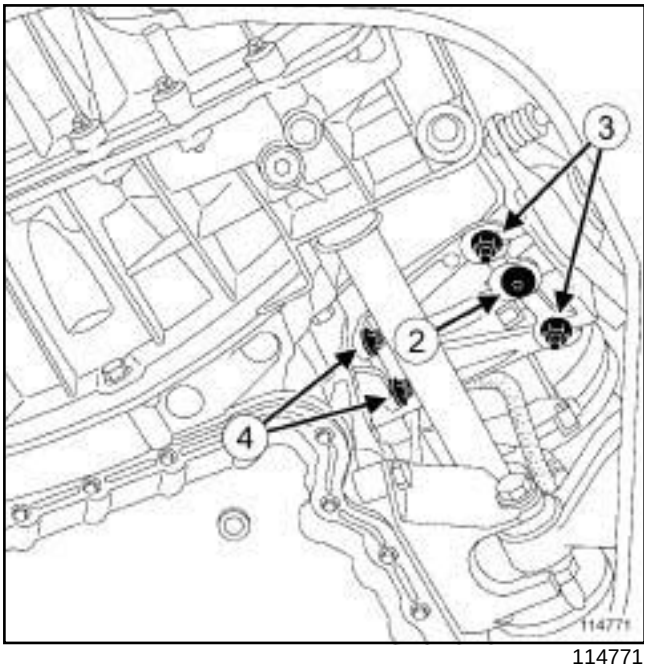

114771

❑ Remove:

- the lower engine tie-bar (see **19D**, **Engine mounting**, **Lower engine tie-bar: Removal - Refitting**, page **19D-36**) ,
- the stay bolt (**2**) on the catalytic converter,
- the stay nuts (**3**) on the catalytic converter,
- the stay nuts (**4**) on the cylinder block,
- the catalytic converter stay,
- the catalytic converter studs using a **roller-type stud removal tool**.

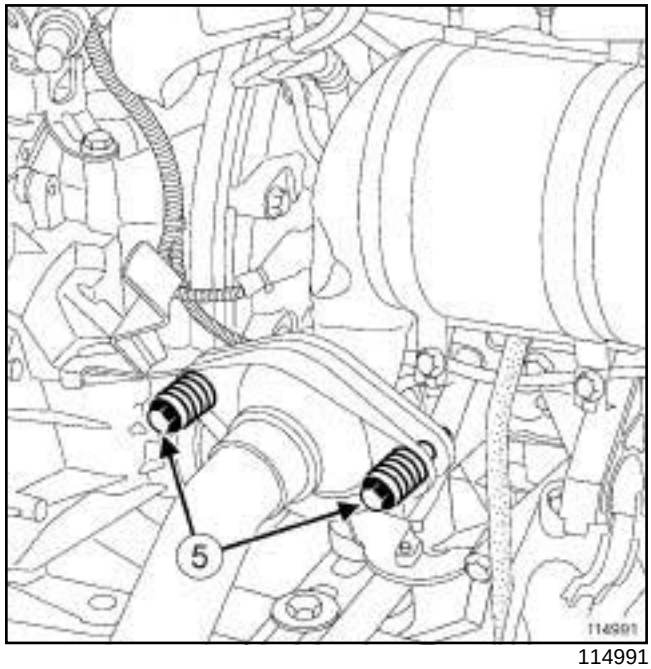

114991

❑ Remove the bolts from the ball joint bracket (**5**) fitted with their springs.

B84 or C84 or E84 or K84 or L84, and M9R, and 700

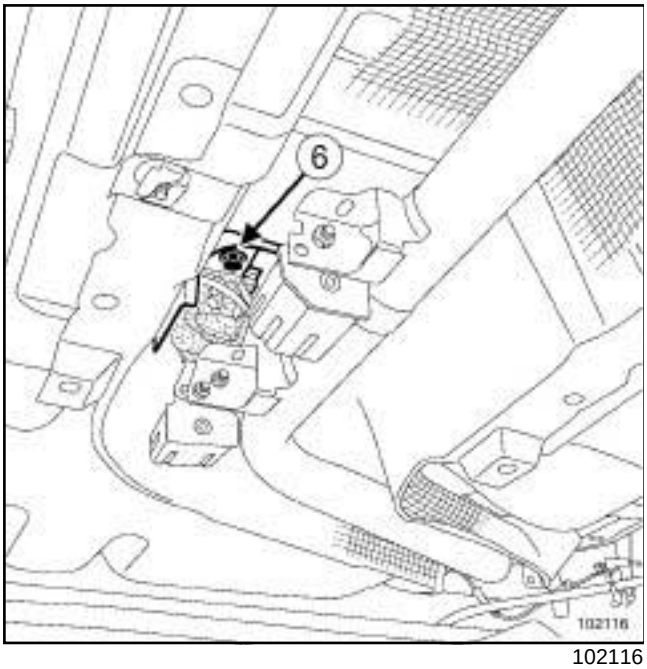

102116

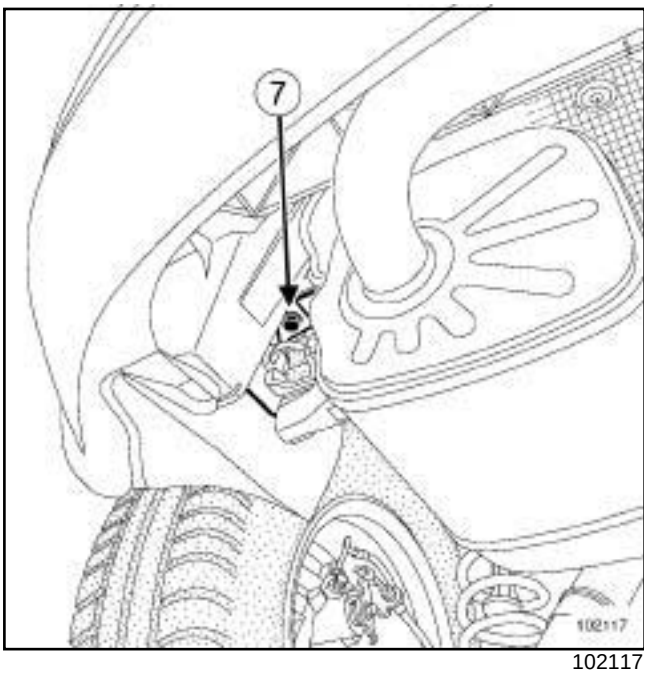

102117

❑

> Note:
>
> Mark with a pen the position of the exhaust rubber mounting bush supports on the vehicle body.

❑ Remove:

- the exhaust pipe rubber mounting bush bolt (**6**) ,
- the silencer rubber mounting bush bolt (**7**) .

❑ Move the exhaust pipe to one side.

II - OPERATION FOR REMOVAL OF PART CONCERNED

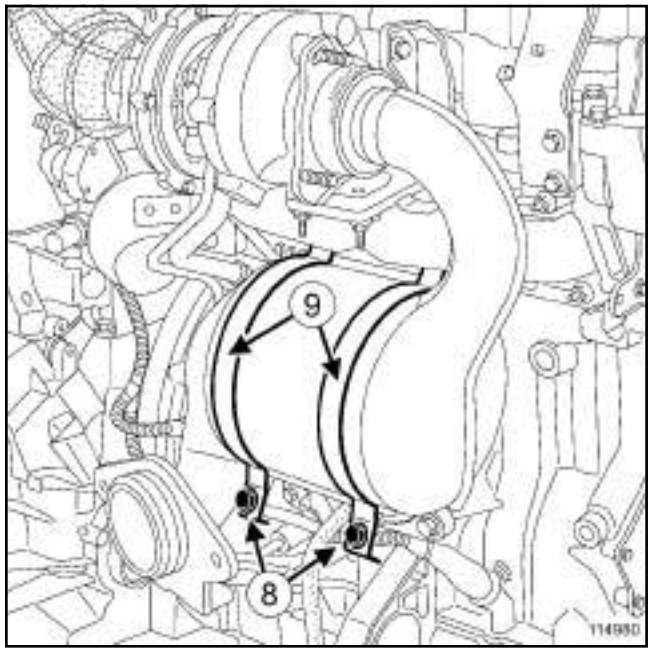

114980

❑ Remove:

- the catalytic converter half-clip bolts (**8**) ,
- the catalytic converter half-clips (**9**) .

❑ Remove the catalytic converter at the timing end.

❑ Fit the catalytic converter using a **safety strap(s)** on the timing end lifting eye.

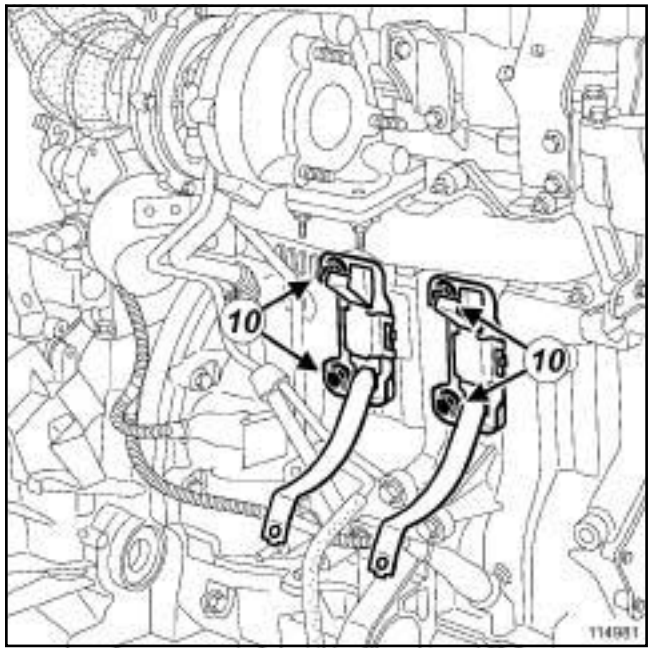

114981

❑ Remove:

- the catalytic converter mounting clip bolts (**10**) ,

B84 or C84 or E84 or K84 or L84, and M9R, and 700

- the catalytic converter mounting clips.

❏ Remove the **safety strap(s)**.

❏ Move the engine towards the front of the vehicle.

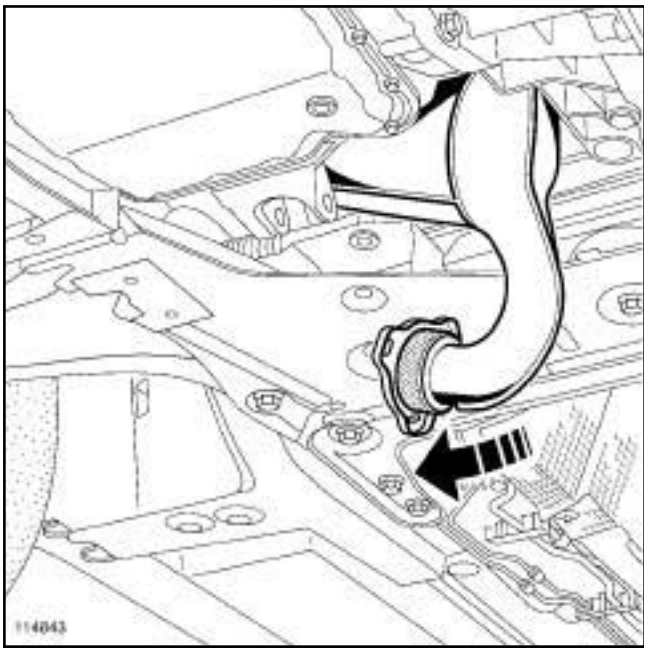

114843

❏ Remove the catalytic converter.

REFITTING

I - REFITTING PREPARATIONS OPERATION

❏ Remove the seal from the ball joint bracket.

❏ Remove the turbocharger studs using a **roller-type stud removal tool**.

❏ Clean and degrease the following mating faces:

- on the exhaust pipe,
- on the catalytic converter in case of reuse,
- the turbocharger,

❏ Refit the new studs onto the turbocharger using a **roller-type stud removal tool**.

❏ Torque tighten the **studs on the turbocharger (14.5 Nm)**.

❏ Fit the new catalytic converter mounting clips onto the cylinder block.

❏ Fit the catalytic converter mounting clip bolts on the cylinder block without tightening them.

❏ Torque tighten the **catalytic converter mounting clip bolts on the cylinder block (21 Nm)**.

II - REFITTING OPERATION FOR PART CONCERNED

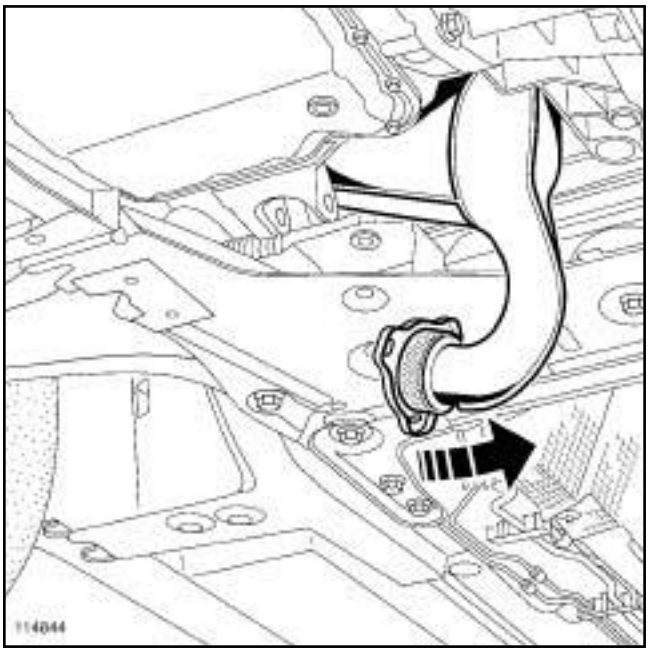

114844

❏ Move the engine towards the front of the vehicle.

❏ Fit:

- the new seal between the turbocharger and the catalytic converter,
- the catalytic converter.

❏ Refit the catalytic converter onto the turbocharger.

❏ Fit:

- the new catalytic converter nuts onto the turbocharger,
- the new catalytic converter half-clamps.

❏ Refit the studs onto the catalytic converter using a **roller-type stud removal tool**.

❏ Torque tighten **the studs on the catalytic converter (19.5 Nm)**.

❏ Refit:

- the catalytic converter half-clip bolts,
- the catalytic converter stay,
- the stay bolt on the catalytic converter,
- the stay nuts on the catalytic converter,
- the stay nuts on the cylinder block.

❏ Torque tighten:

- the **catalytic converter nuts on the turbocharger (21 Nm)**,
- the **catalytic converter half-clip bolts (21 Nm)**,

B84 or C84 or E84 or K84 or L84, and M9R, and 700

- the **catalytic converter stay bolt (8 Nm)**,
- the **stay nuts on the cylinder block (21 Nm)**,
- the **catalytic converter stay nut (21 Nm)**.

III - FINAL OPERATION.

❑ Refit the lower engine tie-bar (see **19D**, **Engine mounting**, **Lower engine tie-bar: Removal - Refitting**, page **19D-36**) .

❑ Torque tighten the lower engine tie-bar (see **19D**, **Engine mounting**, **Suspended engine mounting: Tightening torque**, page **19D-3**) .

❑ Refit the new seal to the ball joint bracket.

❑ Fit the exhaust pipe.

❑ Refit:

- the exhaust pipe rubber mounting bush bolt, aligning the marks,
- the silencer rubber mounting bush bolt, aligning the marks,
- the bolts on the ball joint bracket fitted with their springs.

❑ Torque tighten:

- the **ball jointed bracket bolts with their springs (21 Nm)**,
- the **silencer rubber mounting bush bolt (21 Nm)**,
- the **exhaust pipe rubber mounting bush bolt (21 Nm)**.

❑ Refit:

- the engine undertray,
- the engine undertray bolts,
- the acoustic protection,
- the acoustic protection clips on the scuttle panel partition,
- the scuttle panel grille (see **Scuttle panel grille: Removal - Refitting**) (MR 365, 56A, Exterior equipment),
- the engine covers.

❑ Connect the battery (see **Battery : Removal - Refitting**) (MR 364, 80A, Battery).

B84 or C84, and F4R, and 774

Tightening torques ▽	
oxygen sensors	**45 Nm**
exhaust bracket studs	**8.5 Nm**
catalytic converter nuts on the turbocharger	**40 Nm**
catalytic converter brackets	**8.5 Nm**

REMOVAL

❑ Remove the engine - gearbox assembly (see **10A**, **Engine and cylinder block assembly**, **Engine/ gearbox assembly: Removal - Refitting**, page **10A-97**) .

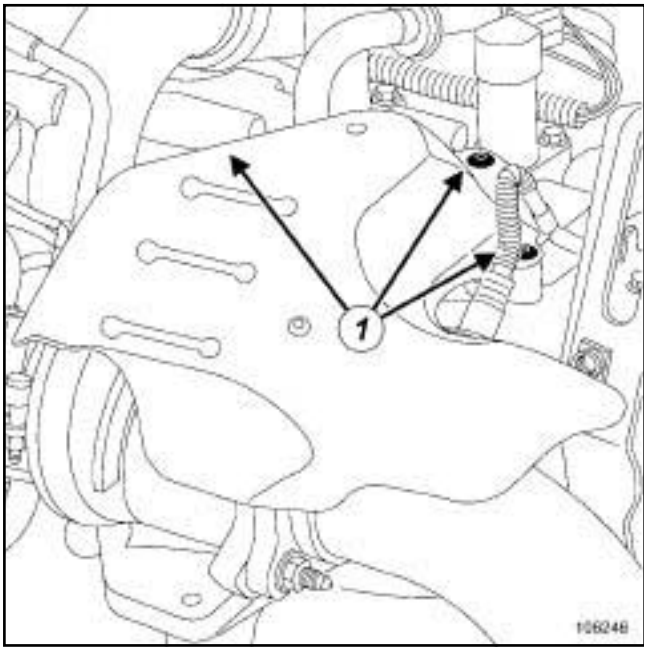

106246

❑ Remove:

- the heat shield mountings (**1**) ,
- the heat shield.

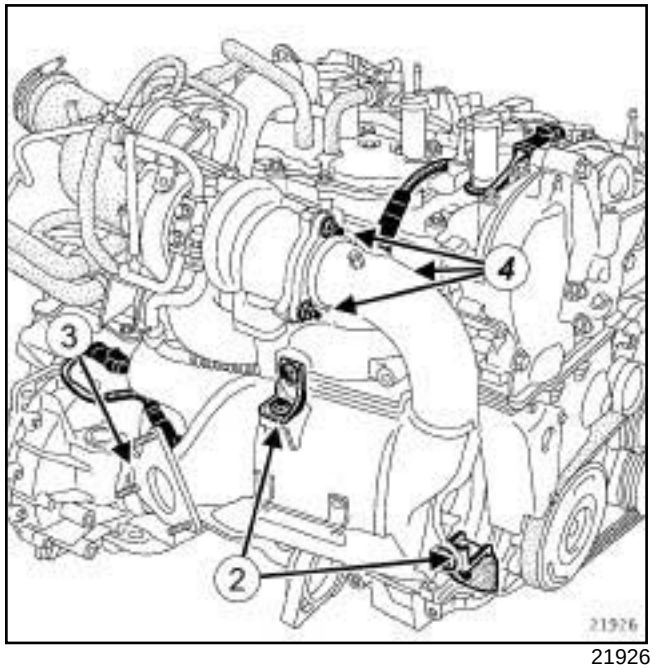

21926

❑ Disconnect the two oxygen sensors

❑ Remove:

- the brackets (**2**) from the catalytic converter,
- the catalytic converter / gearbox strut mounting (**3**) ,
- the nuts (**4**) mounting the catalytic converter on the turbocharger.

❑ Remove:

- the catalytic converter,
- the two oxygen sensors on the workbench.

REFITTING

❑

> **WARNING**
> Be sure to replace all the exhaust flange and turbocharger sealing joints.

❑ Refit both oxygen sensors.

❑ Tighten to torque:

- the **oxygen sensors (45 Nm)**,
- the **exhaust bracket studs (8.5 Nm)**.

❑ Proceed in the reverse order to removal.

❑ Position the catalytic converter nuts on the turbocharger.

B84 or C84, and F4R, and 774

❑ Tighten to torque and in order:

- the **catalytic converter nuts on the turbocharger (40 Nm)**,
- the **catalytic converter brackets (8.5 Nm)**.

B84 or C84 or G84 or S84, and F4R, and 770 or 771 or 776 – B84 or C84 or G84 or S84, and K4J – B84 or C84 or G84 or S84, and K4M

Tightening torques ▽	
rubber mounting bush support bolts on the expansion chamber	**8 Nm**
rubber mounting bush support bolts on the body	**21 Nm**

REMOVAL

❑ Position the vehicle on a lift (see **Vehicle: Towing and lifting**) (MR 364, 02A, Lifting equipment).

❑ Remove the engine undertray.

❑ Cut the exhaust pipe (see **19B**, **Exhaust**, **Exhaust: Parts and consumables for the repair work**, page **19B-6**) (MR 364, 19B, Exhaust).

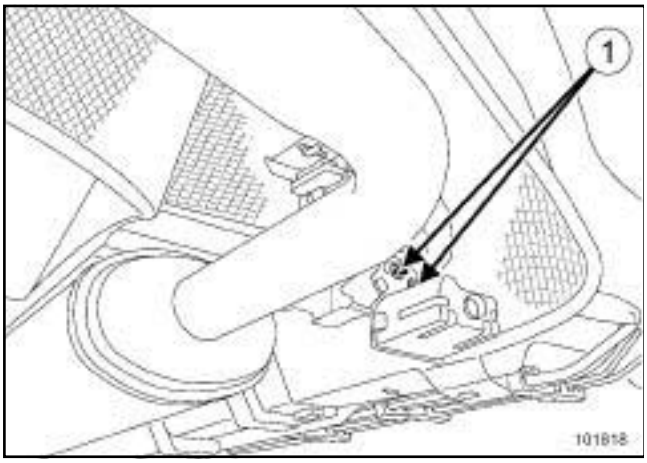

101818

❑ Remove:

- the expansion chamber bolts (**1**) on the rubber mounting bush support,
- the expansion chamber.

> Note:
>
> If the rubber mounting bushes are damaged, mark the position of the support on the body, then replace the «support - rubber mounting bush» assembly.

REFITTING

❑

> **WARNING**
>
> When replacing the intermediate section of the exhaust pipe (pipe on diesel versions, expansion chamber on petrol versions), shorten the spare part by **60 mm**.

❑ Fit:

- the expansion chamber,
- the sleeve (see **19B**, **Exhaust**, **Exhaust: Parts and consumables for the repair work**, page **19B-6**) (MR 364, 19B, Exhaust).

❑ Torque tighten:

- the **rubber mounting bush support bolts on the expansion chamber (8 Nm)**,
- the **rubber mounting bush support bolts on the body (21 Nm)**.

❑ Tighten the sleeves, while easing the exhaust pipe to ensure the correct alignment of the pipe.

❑ Make sure that all the exhaust pipe heat shields are in place and properly secured.

❑ Make sure that there is no contact with the underbody.

> **IMPORTANT**
>
> Position the «sleeve securing nut and bolt» assembly so that the assembly cannot come into contact with the underbody.

B84 or C84, and F4R, and 774

Tightening torques ▽	
exhaust clip	**25 Nm**
rubber mounting bush support bolts on the expansion chamber	**8 Nm**
rubber mounting bush support bolts on the body	**21 Nm**

REMOVAL

❑ Position the vehicle on a lift.

❑ Remove the engine undertray.

❑ Cut the exhaust pipe (see **19B**, **Exhaust**, **Exhaust: Parts and consumables for the repair work**, page **19B-6**) .

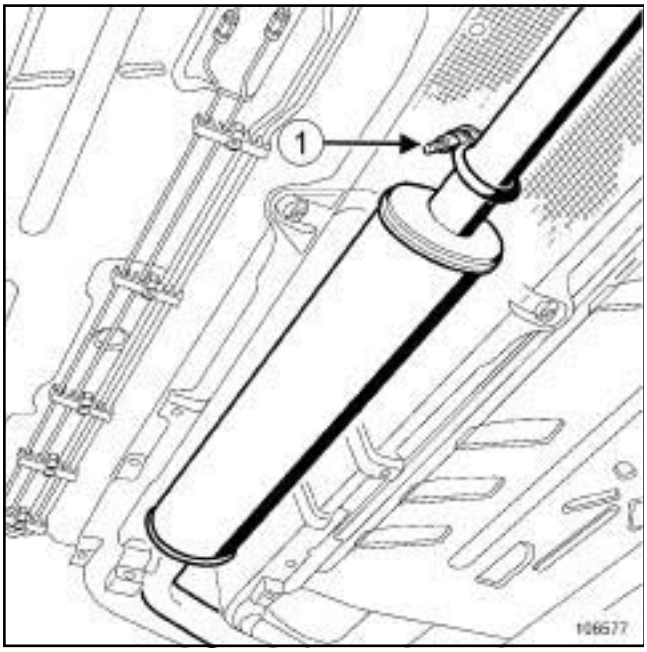

106577

❑ Remove the exhaust clip (**1**) .

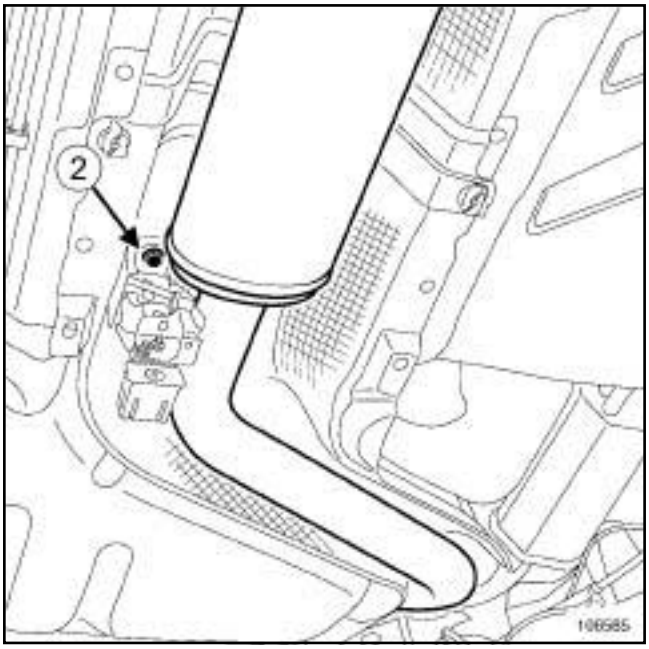

106585

❑ Remove:

- the rubber mounting bush support mounting bolt (**2**) ,
- the expansion chamber.

> Note:
>
> If the rubber mounting bushes are damaged, mark the position of the support on the body and replace the « support - rubber mounting bush » assembly.

REFITTING

❑ Fit:

- the expansion chamber,
- the exhaust clip,
- the sleeve (see **19B**, **Exhaust**, **Exhaust: Parts and consumables for the repair work**, page **19B-6**) .

❑ Torque tighten:

- the **exhaust clip (25 Nm)**,
- the **rubber mounting bush support bolts on the expansion chamber (8 Nm)**,
- the **rubber mounting bush support bolts on the body (21 Nm)**.

❑ Tighten the sleeve while supporting the exhaust pipe to ensure alignment (see **19B**, **Exhaust**, **Exhaust: Parts and consumables for the repair work**, page **19B-6**) .

B84 or C84, and F4R, and 774

- Make sure that all the exhaust pipe heat shields are in place and properly secured.
- Make sure that there is no contact with the underbody.

WARNING

Any damaged heat shields must be replaced.

Do not reuse a used sleeve.

The sleeve bolt and tightening nut must be positioned so that they cannot come into contact with the underbody.

B84 or C84 or G84 or S84, and F9Q, and EQT LEVEL EA1 or EQT LEVEL EA2 or EQT LEVEL EA3 or EQT LEVEL EA4 – B84 or C84 or G84 or S84, and K9K, and EQT LEVEL EA1 or EQT LEVEL EA2 or EQT LEVEL EA3 or EQT LEVEL EA4 – B84 or C84 or G84 or S84, and M9R, and EQT LEVEL EA1 or EQT LEVEL EA2 or EQT LEVEL EA3 or EQT LEVEL EA4

Tightening torques ▽	
rubber mounting bush support bolts on the exhaust pipe	**8 Nm**
rubber mounting bush support bolts on the body	**21 Nm**

REMOVAL

❏ Position the vehicle on a two-post lift.

❏ Cut the exhaust pipe (see **19B**, **Exhaust**, **Exhaust: Parts and consumables for the repair work**, page **19B-6**)

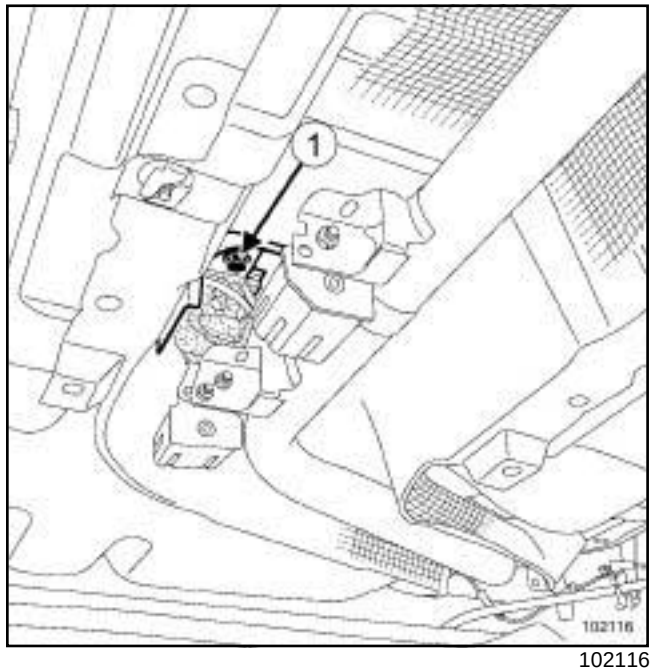

102116

❏ Remove:

- the exhaust connector pipe mounting bolts (**1**) on the rubber mounting bush support,
- the connector pipe.

Note:

If the rubber mounting bushes are damaged:

- mark the position of the mounting on the vehicle body,
- then replace the « support - rubber mounting bush » assembly.

REFITTING

❏

WARNING

Cut the new middle section pipe (see **19B**, **Exhaust**, **Exhaust: Parts and consumables for the repair work**, page **19B-6**) .

❏ Fit:

- the expansion chamber,
- the sleeves (see **19B**, **Exhaust**, **Exhaust: Parts and consumables for the repair work**, page **19B-6**) .

Fit the expansion chamber.

B84 or C84 or G84 or S84, and F9Q, and EQT LEVEL EA1 or EQT LEVEL EA2 or EQT LEVEL EA3 or EQT LEVEL EA4 – B84 or C84 or G84 or S84, and K9K, and EQT LEVEL EA1 or EQT LEVEL EA2 or EQT LEVEL EA3 or EQT LEVEL EA4 – B84 or C84 or G84 or S84, and M9R, and EQT LEVEL EA1 or EQT LEVEL EA2 or EQT LEVEL EA3 or EQT LEVEL EA4

- Torque tighten:
  - the **rubber mounting bush support bolts on the exhaust pipe (8 Nm)**,
  - the **rubber mounting bush support bolts on the body (21 Nm)**.
- Tighten the sleeve, whilst supporting the exhaust pipe to ensure the correct alignment of the pipe (see **19B**, **Exhaust**, **Exhaust: Parts and consumables for the repair work**, page **19B-6**) .
- Make sure that all the exhaust pipe heat shields are in place and properly secured.
- Make sure that there is no contact with the underbody.

WARNING

- Do not reuse a used sleeve.
- All the sleeve nuts and bolts must be positioned so that they cannot come into contact with the underbody.
- Any damaged heat shields must be replaced.

B84 or C84, and F4R, and 774

Tightening torques ▽	
exhaust bracket mounting nuts	**21 Nm**
exhaust clip	**25 Nm**
sub-frame reinforcement strut mountings	**62 Nm**

REMOVAL

❑ Position the vehicle on a two-post lift (see **Vehicle: Towing and lifting**) (MR364, 02, Lifting equipment).

❑ Remove the engine undertray.

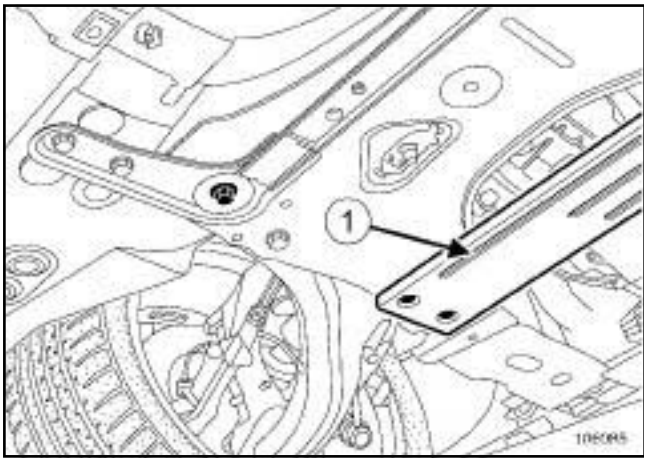

106085

❑ Remove the subframe stiffener bar (**1**) .

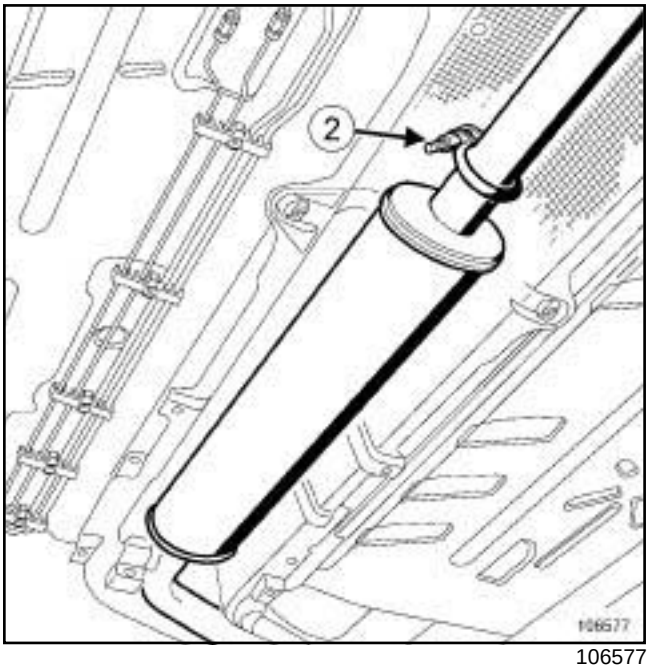

106577

❑ Remove the exhaust clip (**2**) .

❑ Remove the expansion chamber.

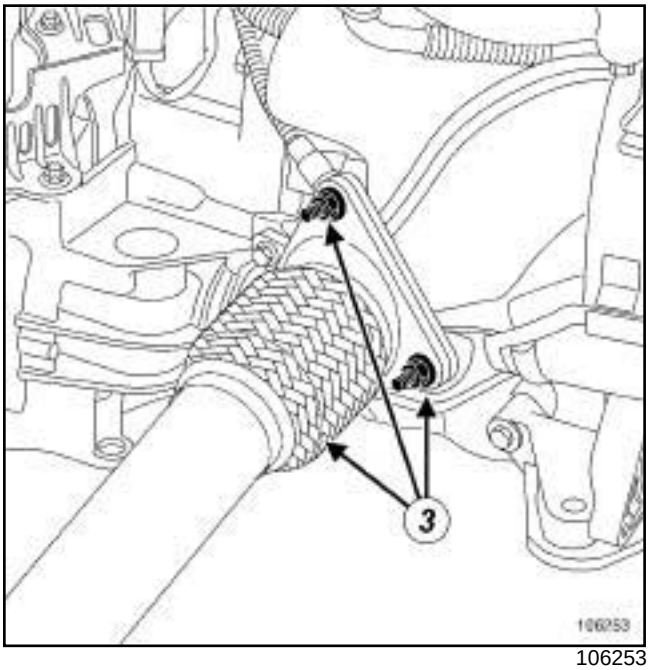

106253

❑ Remove:

- the nuts (**3**) from the exhaust flange,
- the middle tube,

B84 or C84, and F4R, and 774

REFITTING

❏

> **WARNING**
> Be sure to replace the exhaust bracket seal.

❏ Proceed in the reverse order to removal.

❏ Torque tighten:

- the **exhaust bracket mounting nuts (21 Nm)**,
- the **exhaust clip (25 Nm)**,
- the **sub-frame reinforcement strut mountings (62 Nm)**.

❏ Make sure that there is no contact with the underbody.

B84 or C84, and EQT LEVEL EAG

Tightening torques ▽	
connecting clamp nuts	**21 Nm**
exhaust pipe clamp nut	**25 Nm**
subframe stiffener bar bolts	**62 Nm**

❏

> Note:
>
> Before carrying out work on the intermediate pipe, (see **19B**, **Exhaust**, **Exhaust: Parts and consumables for the repair work**, page **19B-6**) .

PARTS AND CONSUMABLES FOR THE REPAIR WORK

❏ Parts always to be replaced:

- exhaust pipe clamp,
- seal between intermediate pipe and catalytic converter.

REMOVAL

❏ Position the vehicle on a two-post lift (see **Vehicle: Towing and lifting**) (MR364, 02, Lifting equipment).

❏ Remove the engine undertray.

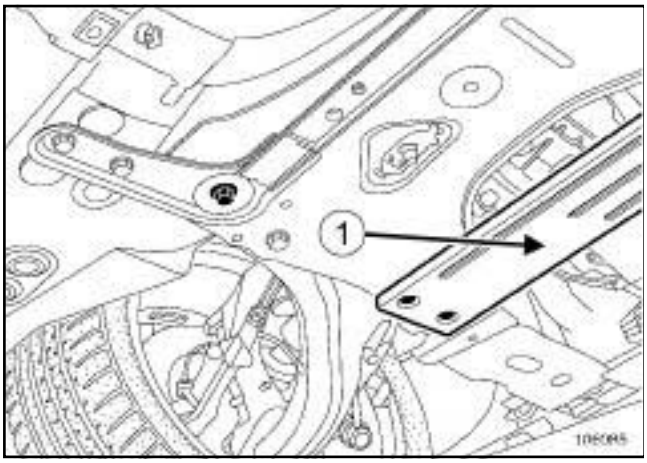

106085

❏ Remove the subframe stiffener bar (**1**) .

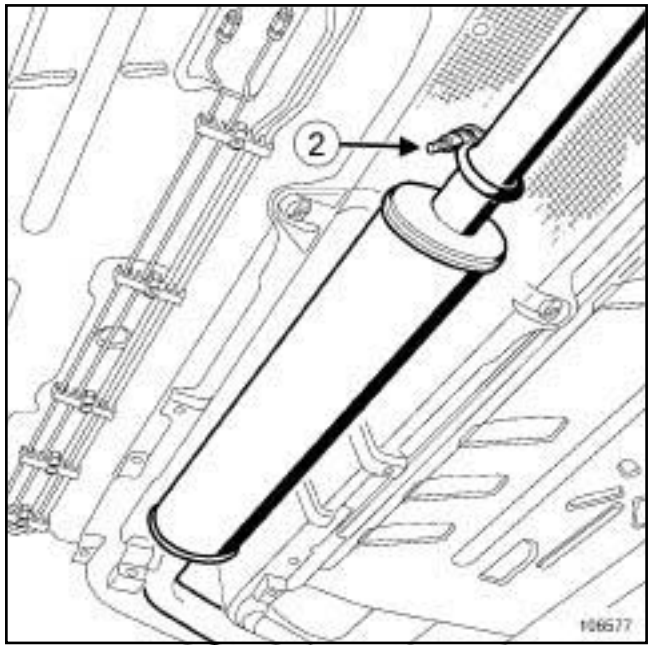

106577

❏ Remove the exhaust clip (**2**) .

❏ Remove the expansion chamber.

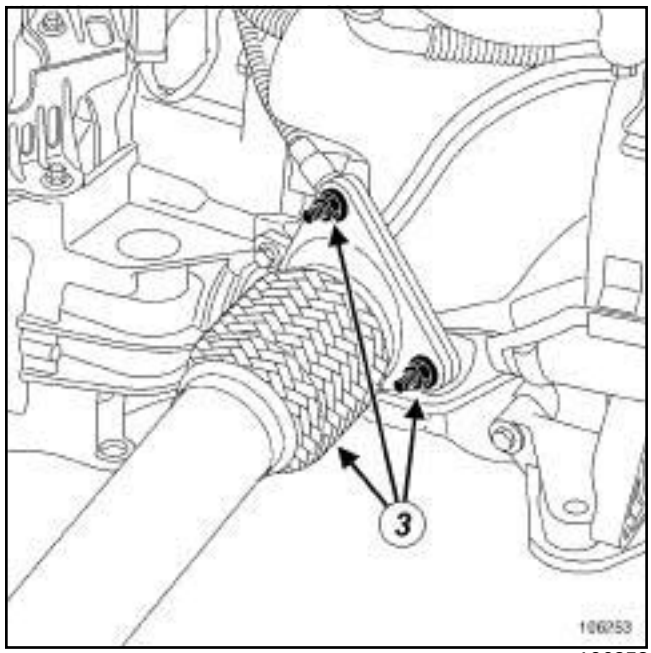

106253

❏ Remove:

- the nuts (**3**) from the exhaust flange,
- the middle tube,

REFITTING

❏ Fit the intermediate pipe complete with a new seal between the intermediate pipe and the catalytic converter.

B84 or C84, and EQT LEVEL EAG

- ❑ Tighten the nuts of the connecting clamp between the intermediate pipe and the catalytic converter by a few turns.
- ❑ Fit:
  - the intermediate pipe on the expansion chamber,
  - a new exhaust pipe clamp between the intermediate pipe and the expansion chamber.
- ❑ Tighten the exhaust pipe clamp nut a few turns.
- ❑ Torque tighten the **connecting clamp nuts (21 Nm)**.
- ❑ Adjust the intermediate pipe's connection to the expansion chamber to prevent any contact with the under body.
- ❑ Torque tighten the **exhaust pipe clamp nut (25 Nm)**.
- ❑ Torque tighten the **subframe stiffener bar bolts (62 Nm)**.
- ❑ Check there is no contact with the underbody, and that there are no leaks.

M9R, and 724

IMPORTANT
Wear heat protective gloves during the operation.

REMOVAL

REMOVAL PREPARATION OPERATION

❑ Position the vehicle on a two-post lift (see **Vehicle: Towing and lifting**) (MR 364, 02A, Lifting equipment).

❑ Cut the exhaust pipe (see **19B**, **Exhaust**, **Exhaust: Precautions for repair**, page **19B-1**)

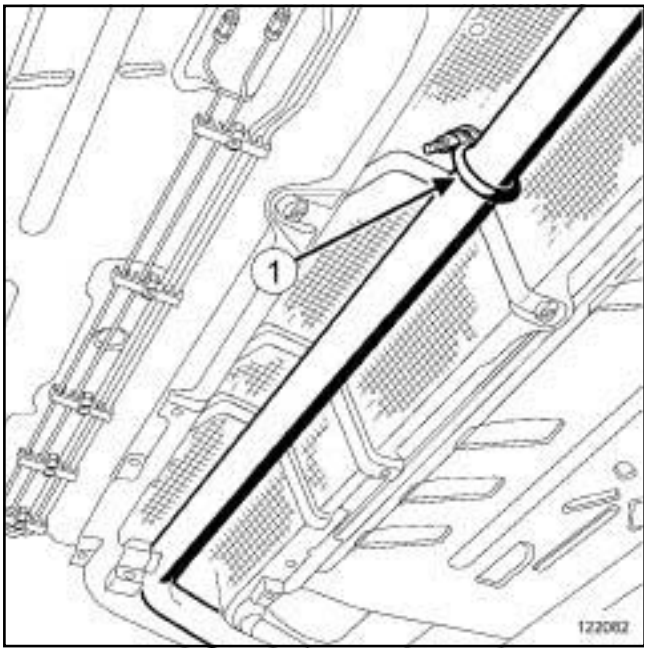

122082

❑ Remove the clip (**1**) between the particle filter and the intermediate pipe.

❑ Remove the particle filter from the intermediate pipe.

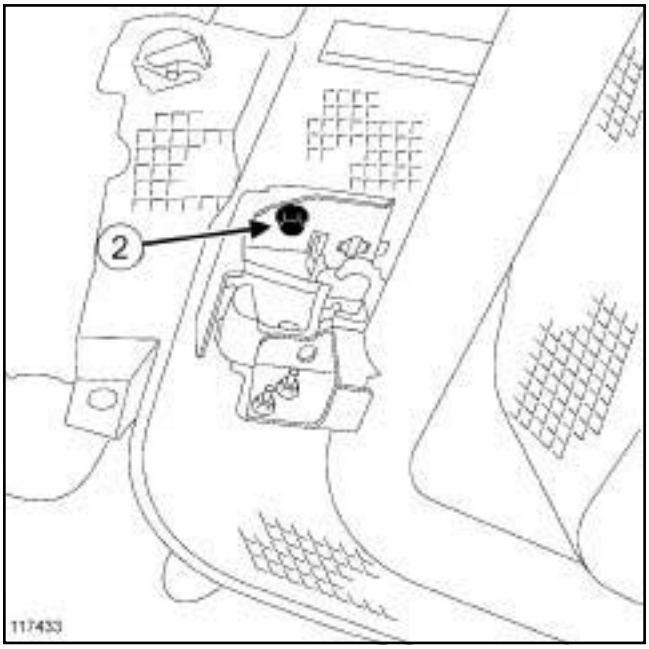

117433

❑ Remove:

- the intermediate pipe rubber mounting bush bolt (**2**) ,
- the middle tube,

Note:
If the rubber mounting bushes are damaged, mark the position of the support on the body, then replace the « support - rubber mounting bush » assembly.

REFITTING

I - REFITTING PREPARATIONS OPERATION

❑

WARNING
To prevent the surrounding components from overheating, do not damage (tear, pierce bend etc.) a heat shield. All damaged heat shields must be replaced.

❑ Remove:

- the intermediate pipe rubber mounting bush support bolts,
- the intermediate pipe rubber mounting bush support.

M9R, and 724

- Refit:
  - the new intermediate pipe rubber mounting bush support,
  - the new intermediate pipe rubber mounting bush support bolts.

II - REFITTING OPERATION FOR PART CONCERNED

- Fit the intermediate pipe.
- Cut the new exhaust middle pipe (see **19B**, **Exhaust**, **Exhaust: Precautions for repair**, page **19B-1**)
- Refit the intermediate pipe rubber mounting bush bolt.
- Fit a new sleeve between the silencer and the intermediate pipe (see **19B**, **Exhaust**, **Exhaust: Precautions for repair**, page **19B-1**) .

> **WARNING**
> Position the «sleeve securing nut and bolt» assembly so that the assembly cannot come into contact with the underbody.

- Tighten the sleeve while supporting the exhaust pipe to ensure they are aligned.
- Refit the clip between the particle filter and the intermediate pipe.
- Check:
  - that all the exhaust pipe heat shields are in place and properly attached,
  - that there is no contact with the underbody,
  - that there are no leaks.

K9K, and 734

Note:

Before carrying out work on the intermediate pipe (see **19B**, **Exhaust**, **Exhaust: Precautions for repair**, page **19B-1**) .

REMOVAL

I - REMOVAL PREPARATION OPERATION

❑ Position the vehicle on a two-post lift (see **Vehicle: Towing and lifting**) (MR 364, 02A, Lifting equipment).

II - OPERATION FOR REMOVAL OF PART CONCERNED

❑ Cut the exhaust pipe at the designated area to be cut, 1 and 2 (see **19B**, **Exhaust**, **Exhaust: Parts and consumables for the repair work**, page **19B-6**) and (see **19B**, **Exhaust**, **Exhaust: Precautions for repair**, page **19B-1**) .

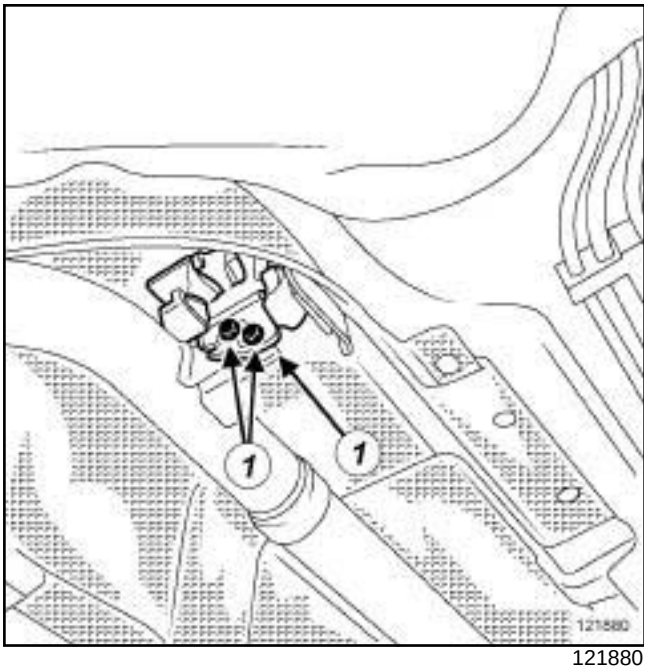

121880

❑ Remove:

- the intermediate pipe rubber mounting bush bolts (**1**)
- the rubber mounting bush of the intermediate pipe,
- the middle tube,

REFITTING

I - REFITTING PREPARATIONS OPERATION

❑ Always replace the intermediate pipe rubber mounting bush.

II - REFITTING OPERATION FOR PART CONCERNED

❑ Fit the intermediate pipe to the particle filter and to the silencer fitted with new after-sales sleeves then follow the instructions (see **19B**, **Exhaust**, **Exhaust: Precautions for repair**, page **19B-1**) .

❑ Refit:

- the rubber mounting bush of the intermediate pipe,
- the intermediate pipe rubber mounting bush bolts.

❑ Check the following and deal with if necessary:

- that there is no contact with the underbody,
- the presence and correct positioning of all the exhaust pipe heat shields.

❑ Start the engine.

❑ Check that there are no leaks and deal with them if necessary.

B84 or C84 or G84 or S84, and F9Q or K4J or K4M or K9K or M4R or M9R – B84 or C84 or G84 or S84, and F4R, and 770 or 771 or 776

Tightening torques ▽	
rubber mounting bush support bolts on the silencer	**8 Nm**
rubber mounting bush support bolts on the body	**21 Nm**

REMOVAL

❑ Position the vehicle on a two-post lift.

❑ Cut the exhaust pipe (see **19B**, **Exhaust**, **Exhaust: Parts and consumables for the repair work**, page **19B-6**)

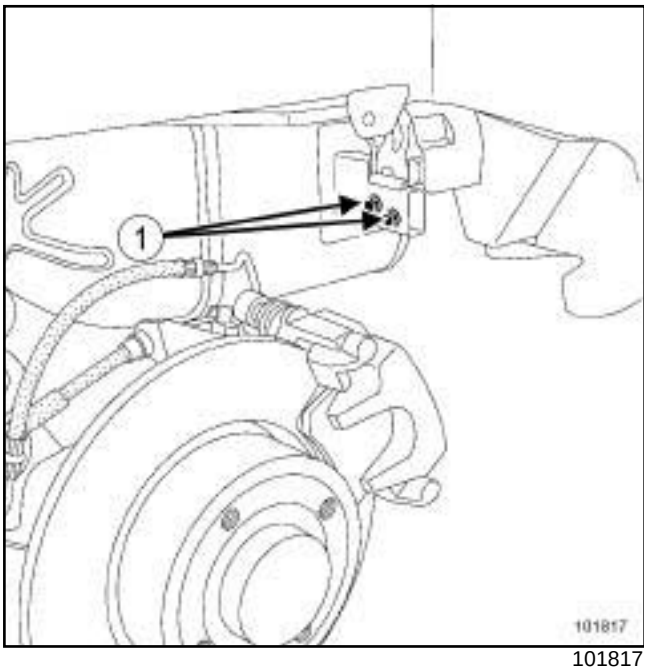

101817

❑ Remove:

- the silencer mounting bolts (**1**) on the rubber mounting bush support,
- the silencer.

Note:

If the rubber mounting bushes are damaged:

- mark the position of the mounting on the vehicle body,
- replace the « support/rubber mounting bush » assembly.

REFITTING

❑ Fit:

- the silencer,
- the sleeve (see **19B**, **Exhaust**, **Exhaust: Parts and consumables for the repair work**, page **19B-6**) .

❑ Torque tighten:

- the **rubber mounting bush support bolts on the silencer (8 Nm)**,
- the **rubber mounting bush support bolts on the body (21 Nm)**.

❑ Tighten the sleeve, while easing in the exhaust pipe to ensure the correct alignment of the pipe.

❑ Make sure that all the exhaust pipe heat shields are in place and properly secured.

❑ Make sure that there is no contact with the underbody.

WARNING

Do not reuse a used sleeve.

The « sleeve tightening nut and bolts » assembly must be positioned so that they cannot come into contact with the underbody.

Any damaged heat shields must be replaced.

B84 or C84, and F4R, and 776

Tightening torques ▽	
rubber mounting bush support bolts on the expansion chamber	**8 Nm**
rubber mounting bush support bolts on the body	**21 Nm**

❑

> Note:
>
> Before carrying out work on the silencer, (see **19B**, **Exhaust**, **Exhaust: Parts and consumables for the repair work**, page **19B-6**) .

REMOVAL

❑ Position the vehicle on a two-post lift (see **Vehicle: Towing and lifting**) (MR364, 02, Lifting equipment).

❑ Cut the exhaust pipe (see **19B**, **Exhaust**, **Exhaust: Parts and consumables for the repair work**, page **19B-6**) in the designated area to be cut (see **19B**, **Exhaust**, **Exhaust: Parts and consumables for the repair work**, page **19B-6**) .

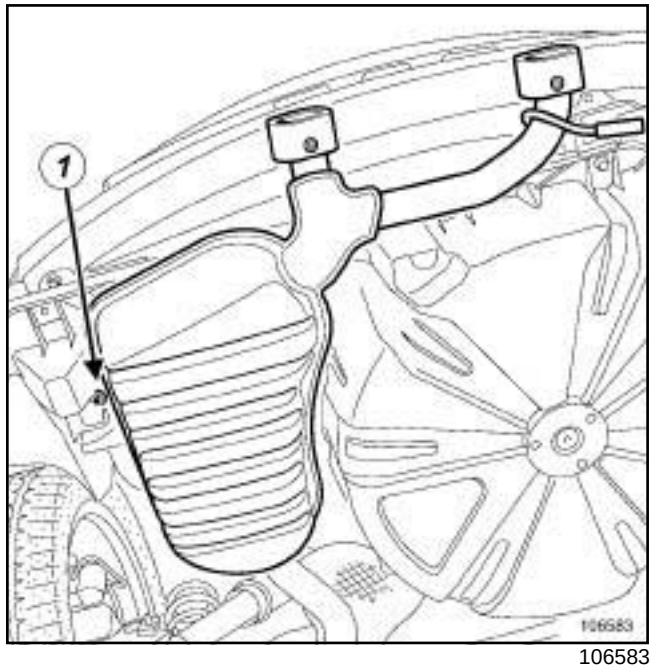

106583

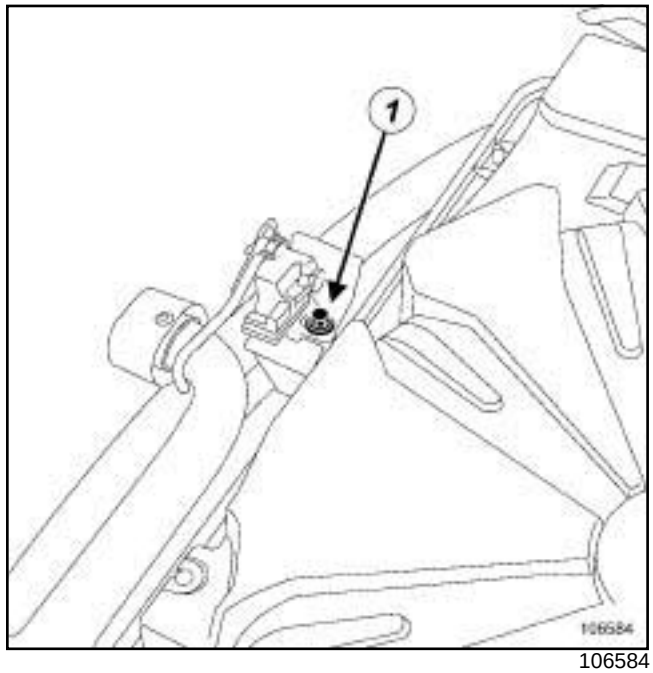

106584

❑ Remove:

- the rubber mounting bush support bolts (**1**) ,

- the silencer.

> Note:
>
> If the rubber mounting bushes are damaged, mark the position of the support on the body, then replace the « support - rubber mounting bush » assembly.

B84 or C84, and F4R, and 776

REFITTING

- Make sure that all the exhaust pipe heat shields are in place and properly secured.
- Fit:
  - the silencer,
  - the After Sales sleeve.

EQT LEVEL EAG

- Position the silencer so that it does not touch the bumper. The space between the two exhaust tailpipe tips and the bumper must be identical.

- Torque tighten:
  - the **rubber mounting bush support bolts on the expansion chamber (8 Nm)**,
  - the **rubber mounting bush support bolts on the body (21 Nm)**.
- Tighten the sleeve (see **19B**, **Exhaust**, **Exhaust: Parts and consumables for the repair work**, page **19B-6**) .

- Check there is no contact, and that there are no leaks.

M9R, and 724

IMPORTANT
Wear heat protective gloves during the operation.

REMOVAL

I - REMOVAL PREPARATION OPERATION

- ❑ Position the vehicle on a two-post lift (see **Vehicle: Towing and lifting**) (MR 364, 02A, Lifting equipment).
- ❑ Cut the exhaust pipe (see **19B**, **Exhaust**, **Exhaust: Precautions for repair**, page **19B-1**)
- ❑ Remove:
  - the rear lights (see **Rear light on wing: Removal - Refitting**) (MR 364, 81A, Rear lighting).
  - the rear bumper (see **Rear bumper: Removal - Refitting**) (MR 365, 55A, Exterior protection).

M9R, and 724

II - OPERATION FOR REMOVAL OF PART CONCERNED

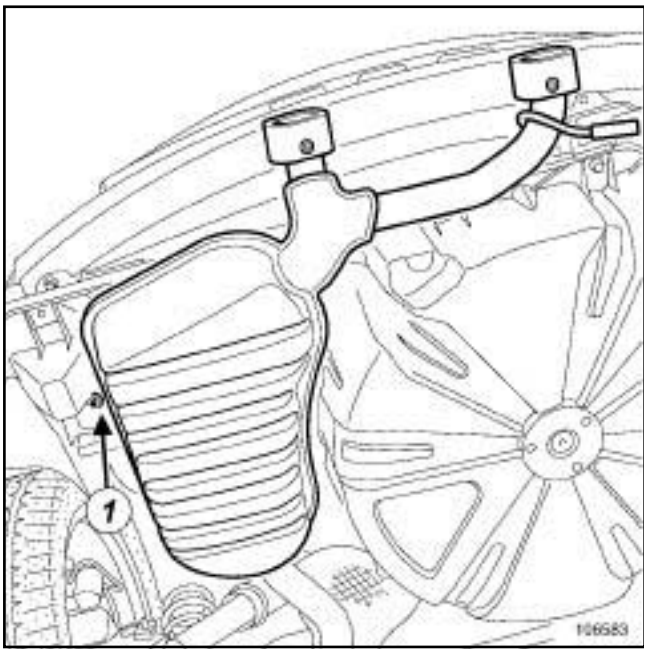

106583

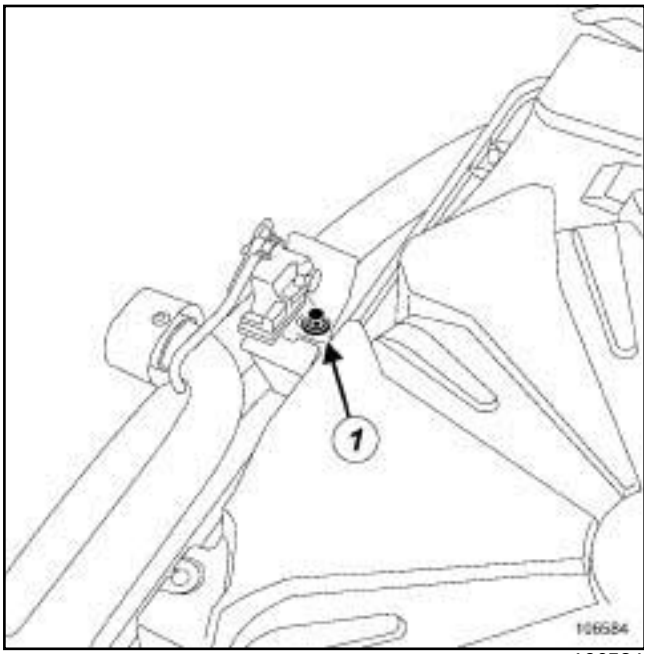

106584

❑ Remove:

- the silencer rubber mounting bush support bolts (**1**) ,
- the silencer.

Note:

If the rubber mounting bushes are damaged, mark the position of the support on the body, then replace the « support - rubber mounting bush » assembly.

REFITTING

I - REFITTING PREPARATIONS OPERATION

❑

WARNING

To prevent the surrounding components from overheating, do not damage (tear, pierce bend etc.) a heat shield. All damaged heat shields must be replaced.

❑ Remove:

- the silencer rubber mounting bush support bolts,
- the silencer rubber mounting bush supports.

❑ Refit:

- the new silencer rubber mounting bush supports,
- the new silencer rubber mounting bush support bolts.

II - OPERATION FOR REMOVAL OF PART CONCERNED

❑ Refit:

- the silencer,
- the silencer rubber mounting bush support bolts.

III - FINAL OPERATION.

❑ Fit a new sleeve between the silencer and the intermediate pipe (see **19B**, **Exhaust**, **Exhaust: Precautions for repair**, page **19B-1**) .

WARNING

Position the « sleeve securing nut and bolt » assembly so that the assembly cannot come into contact with the underbody.

❑ Tighten the sleeve while supporting the exhaust pipe to ensure they are aligned.

❑ Refit:

- the rear bumper (see **Rear bumper: Removal - Refitting**) (MR 365, 55A, Exterior protection),

M9R, and 724

- the rear lights (see **Rear light on wing: Removal - Refitting**) (MR 364, 81A, Rear lighting).

❏ Check:

- the alignment of the silencer in relation to the bumper,
- that all the exhaust pipe heat shields are in place and properly attached,
- that there is no contact with the underbody,
- that there are no leaks.

Particle filter: List and location of components

B84 or C84 or G84 or S84, and F9Q, and 803 or 804

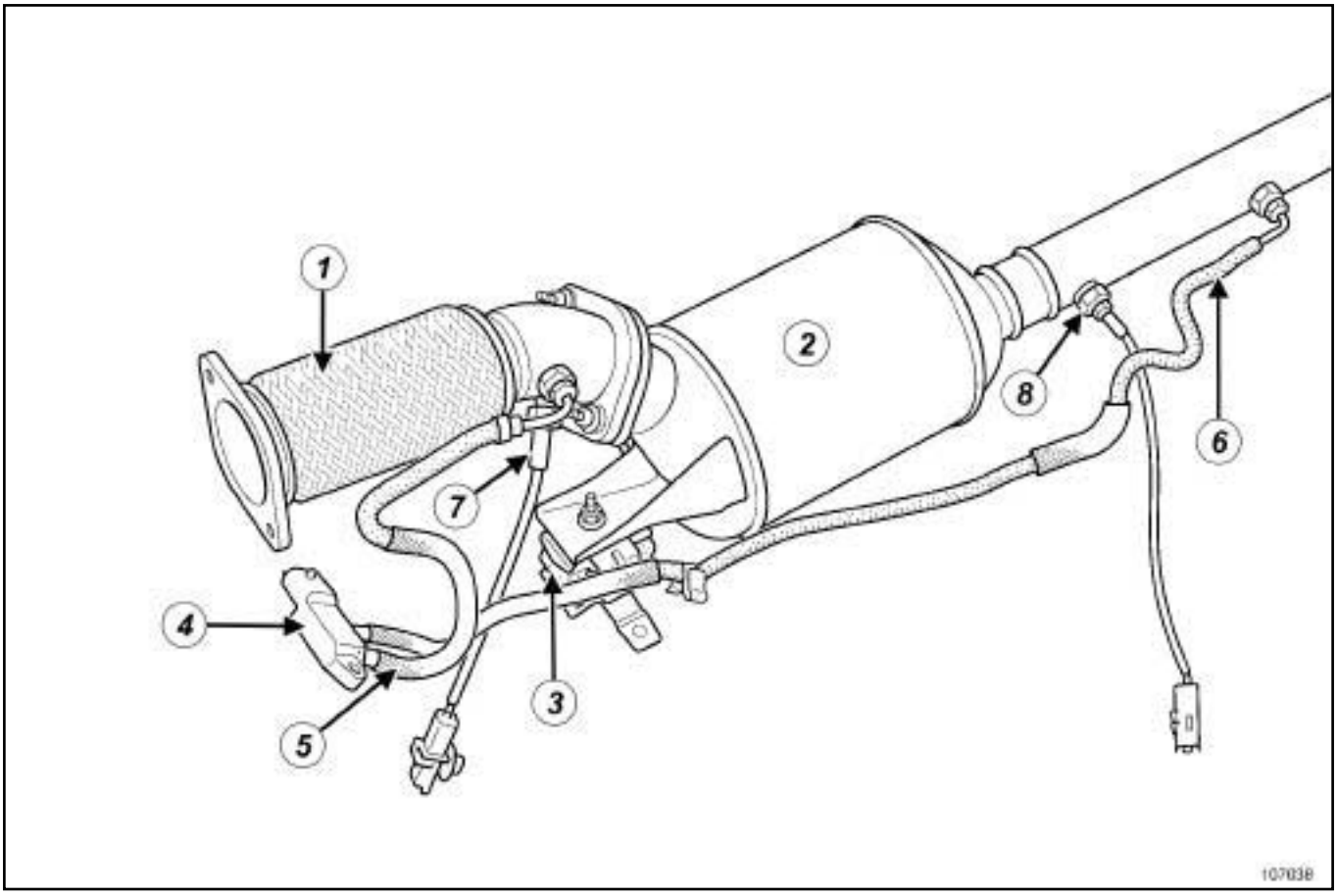

107038

(**1**) Flexible pipe

(**2**) Particle filter

(**3**) Rubber mounting bush

(**4**) Particle filter pressure sensor

(**5**) Upstream pressure measurement connection

(**6**) Downstream pressure measurement connection

(**7**) Upstream particle filter temperature sensor

(**8**) Downstream particle filter temperature sensor

M9R, and 724

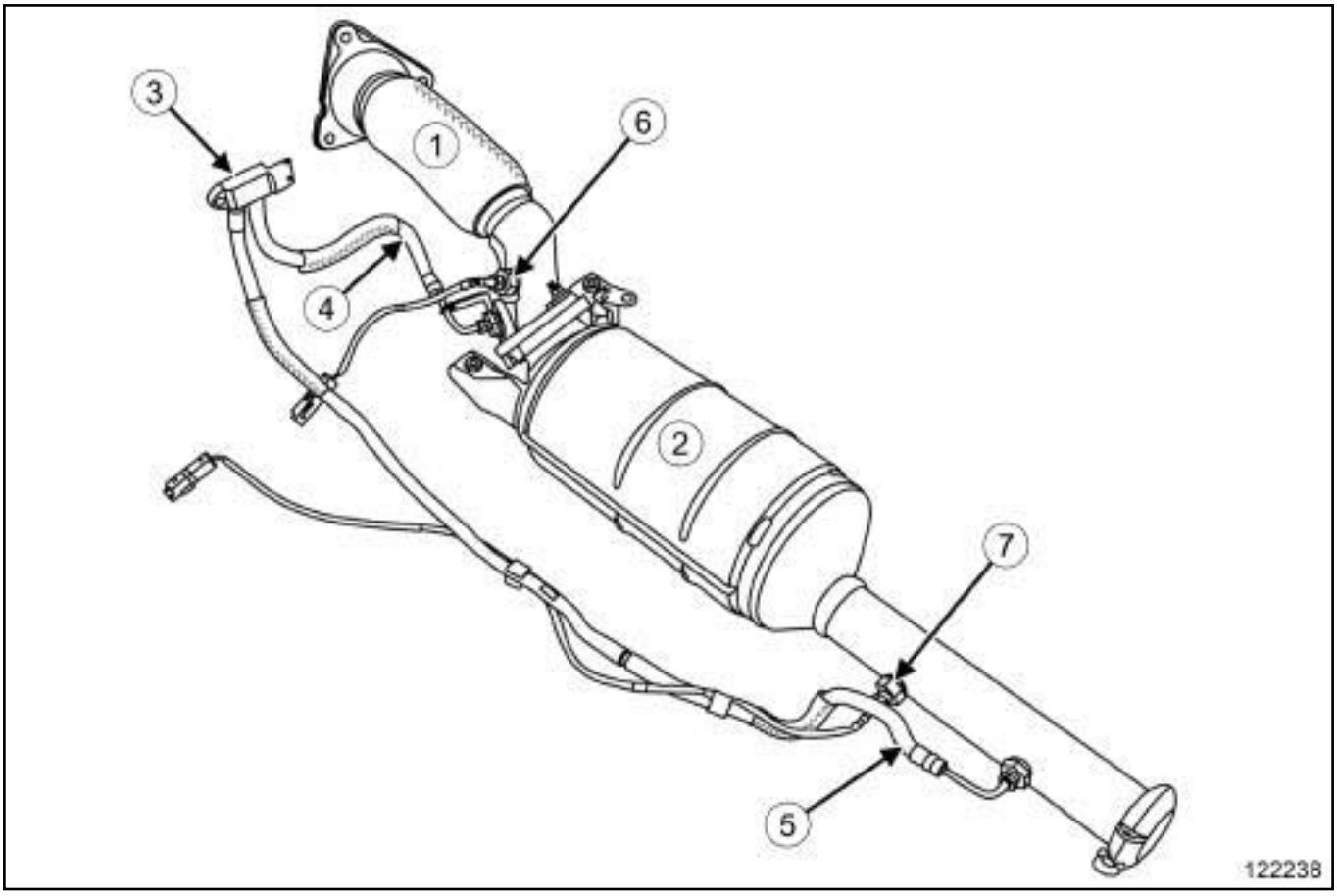

122238

(**1**)	Connection hose
(**2**)	Particle filter with intermediate tube
(**3**)	Particle filter differential pressure sensor
(**4**)	Upstream pressure measurement connection
(**5**)	Downstream pressure measurement connection
(**6**)	Particle filter upstream temperature sensor
(**7**)	Particle filter downstream temperature sensor

K9K, and 734

I - DIESEL INJECTOR ON THE CATALYTIC PRE-CONVERTER

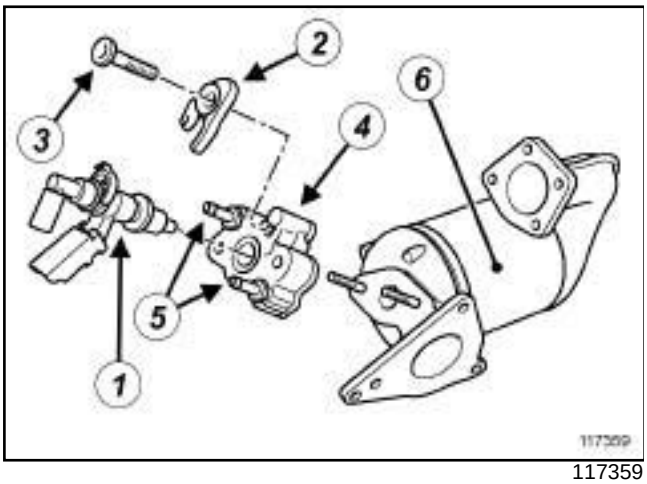

117359

(**1**) Diesel injector on the catalytic pre-converter, equipped with its seal

(**2**) Diesel injector retaining bracket on the catalytic pre-converter

(**3**) Diesel injector retaining bracket bolt on the catalytic pre-converter

(**4**) Diesel injector cooler on the catalytic pre-converter fitted with its seal

(**5**) Diesel injector cooler coolant circulation unions on the catalytic pre-converter

(**6**) Catalytic pre-converter

II - PARTICLE FILTER

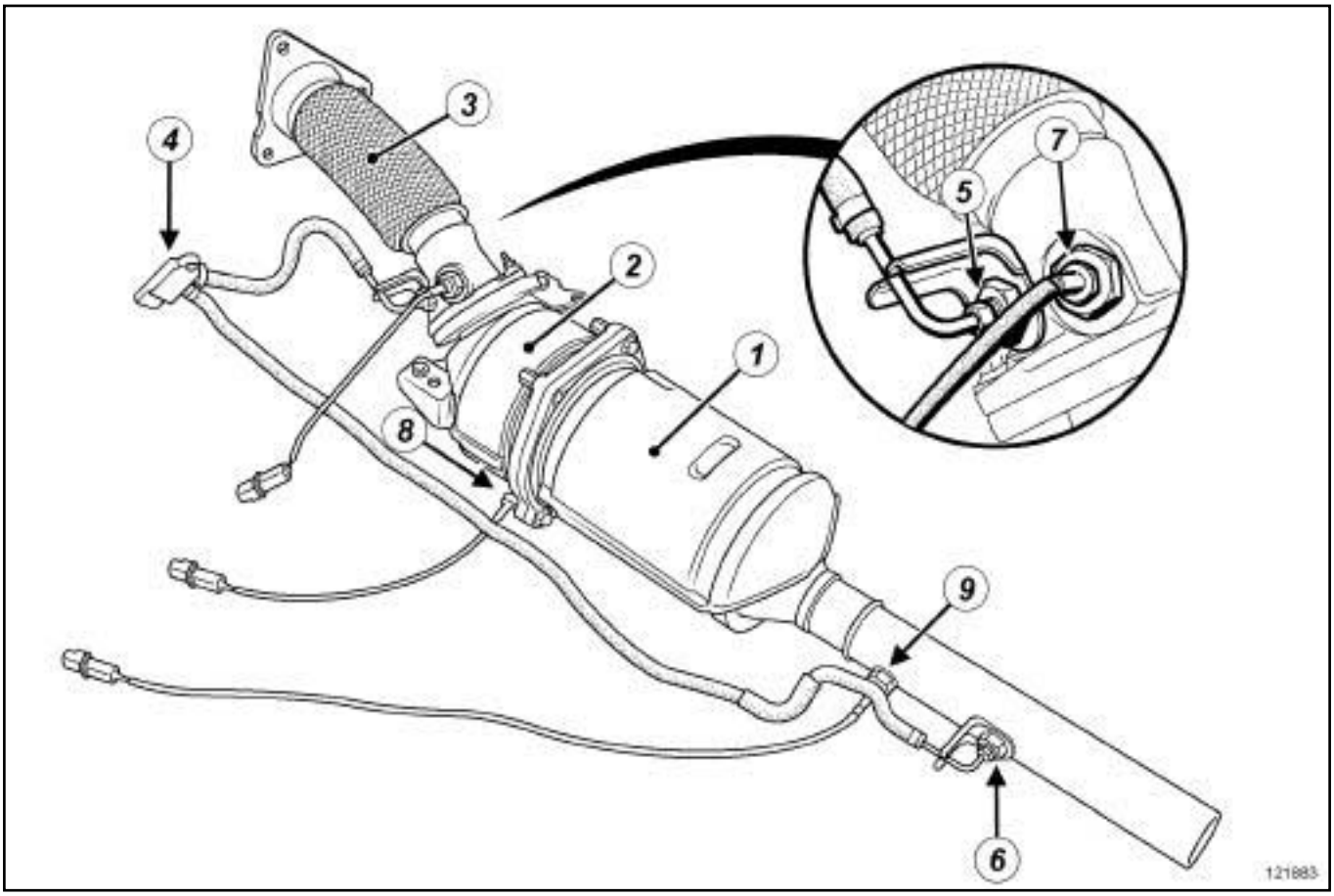

121883

(**1**) Particle filter

(**2**) Catalytic converter

(**3**) Flexible pipe

(**4**) Pressure measurement connection of the particle filter

(**5**) Particle filter upstream pressure measurement connection

(**6**) Pressure sensor downstream of the particle filter

(**7**) Catalytic converter upstream temperature sensor

K9K, and 734

(**8**)	Particle filter upstream temperature sensor
(**9**)	Particle filter downstream temperature sensor

B84 or C84 or G84 or S84, and F9Q, and 804

Essential equipment
diagnostic tool

I - SAFETY ADVICE

Due to the dangers of high temperatures, be sure to observe the following instructions:

- never open or separate the pressure tapping circuit, except at the unions on the exhaust pipe (only the supplier can guarantee pressure tapping circuit sealing),

- Position the pressure pipes correctly. If the pipes are not positioned correctly, their flexible sections may be twisted which will create low points and this may result in the pipes rupturing when fluid freezes and expands.

IMPORTANT
Do not park and run the engine in a place where combustible substances and materials such as grass or leaves can come into contact with the hot exhaust system.

II - OPERATING PRINCIPLE

The particle filter, located under the body at the outlet from the catalytic pre-convertor, limits the pollutant emissions by accumulating the unburnt particles from the exhaust fumes (loading or filtering phase), then these particles are eliminated by combustion (regeneration phase).

Using sensors, the injection computer measures the temperature as well as the pressure of the exhaust fumes upstream and downstream of the particle filter.

The injection computer continuously evaluates the level of clogging of the particle filter using the pressure difference upstream and downstream of the particle filter. When it is clogged, the two temperature values inform the injection computer that the temperature conditions are high enough (approximately **600°C**) to trigger regeneration.

This consists of burning the particles held in the particle filter: to do this, the injection switches to « delayed injection » mode and the fuel not burned in the combustion chambers burns the residues contained in the particle filter cells.

The extent to which the particle filter is clogged depends on the user's driving style:

- during an average journey (combined cycle and motorway of more than **15 minutes**), the particle filter automatically burns the particles without being noticed by the customer (apart from some white smoke): this is « spontaneous regeneration » ,

- if the operating temperature is not high enough to trigger spontaneous regeneration, clogging increases until it **exceeds 35 g** ; an acceleration request to trigger spontaneous regeneration is then sent to the driver via an instrument panel warning light; the same happens if several attempts to regenerate have failed.

- if these conditions are still not met and clogging **exceeds 45 g**. « Static generation » in the workshop is then necessary, using the **diagnostic tool** (« SERVICE » indicator light comes on with message « CHECK ANTIPOLLUTION » : (see **19B**, **Exhaust**, **Particle filter: Cleaning**, page **19B-101**) .

B84 or C84 or G84 or S84, and F9Q, and 803 or 804

Essential equipment
diagnostic tool

Tightening torques ▽	
nut mounting the rubber mounting bush on the particle filter	**25 N.m**
exhaust bracket nuts between the hose and the catalytic pre-converter	**21 N.m**
nuts mounting the rubber mounting bush on the sub-frame	**25 N.m**
exhaust trunking nut	**25 N.m**
downstream pressure measurement connection on its adapter	**21 N.m**
connecting clip bolt between the rear silencer and the particle filter	**25 N.m**
exhaust bracket nuts between the hose and the catalytic pre-converter	**21 N.m**
nuts mounting the rubber mounting bush on the sub-frame	**25 N.m**

REMOVAL

- ❑ Position the vehicle on a two-post lift.
- ❑ Disconnect the battery (see **Battery: Removal - Refitting**) .
- ❑ Remove the engine undertray.
- ❑ Cut the exhaust pipe after the particle filter (see **19B**, **Exhaust**, **Exhaust: Parts and consumables for the repair work**, page **19B-6**) .

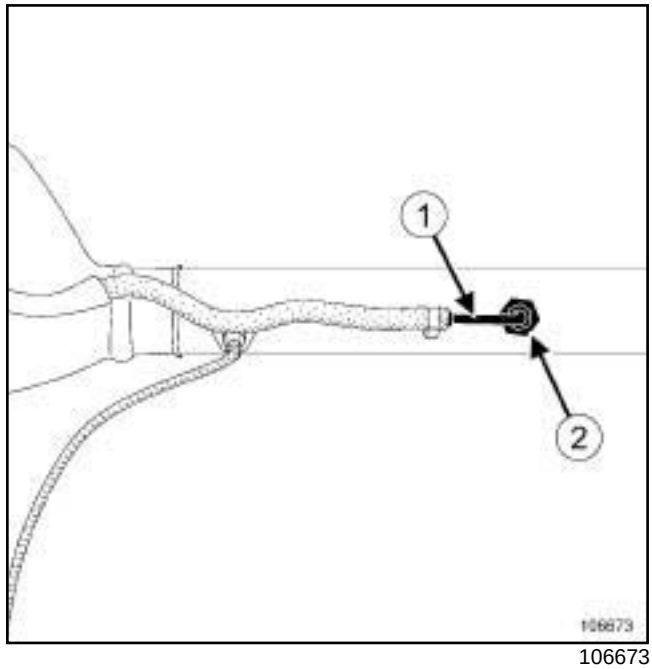

106673

- ❑ Remove the downstream pressure measurement connection (**1**) from its adapter (**2**) bolted onto the exhaust pipe.

WARNING
When the pressure measurement connection is removed, the adapter (**2**) must be held with a lock wrench.

WARNING
The pressure measurement circuit must never be opened except at the adapters on the exhaust pipe.

B84 or C84 or G84 or S84, and F9Q, and 803 or 804

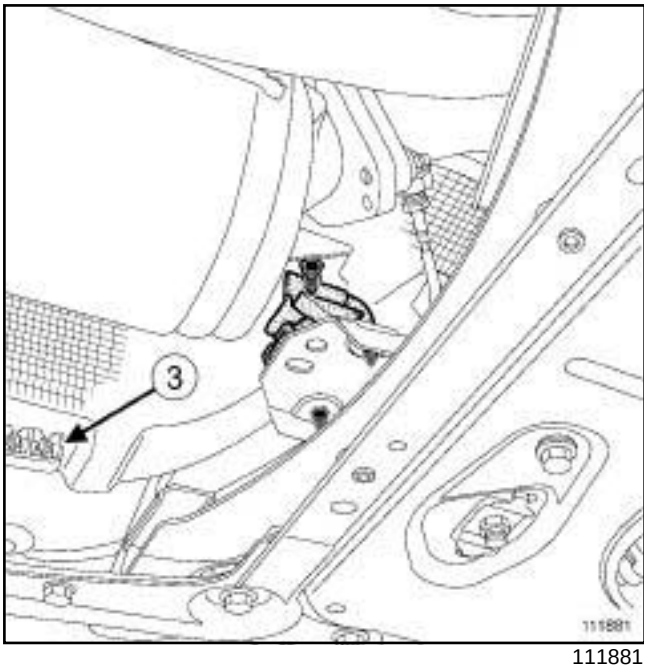

111881

- ❑ Remove the heat shield mounting clip (**3**) .
- ❑ Move the heat shield to one side slightly.
- ❑ Unclip:
  - the downstream pressure measurement tapping heat shield,
  - the downstream temperature sensor wiring harness.
- ❑ Pass the downstream pressure measurement connection into the engine compartment whilst leaving it joined to the pressure sensor.

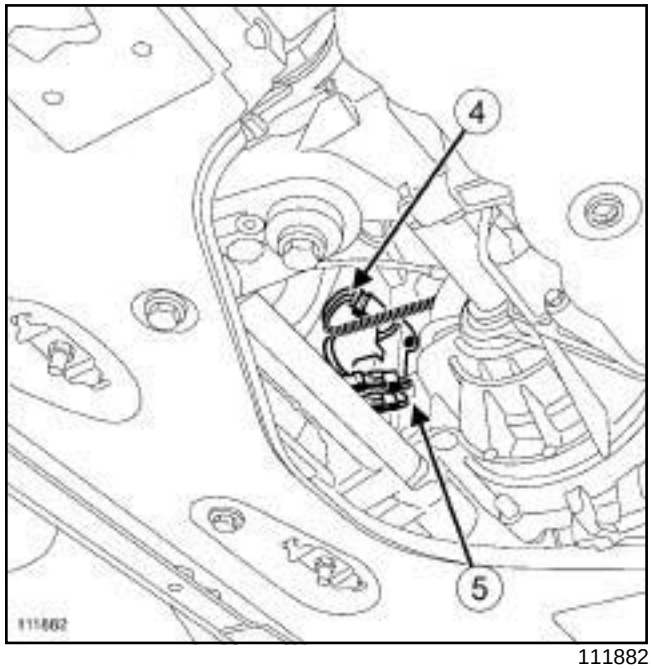

111882

- ❑ Disconnect the particle filter pressure sensor connector (**4**) .
- ❑ Remove the retaining clip (**5**) from the wiring harness on the particle filter pressure sensor mounting.

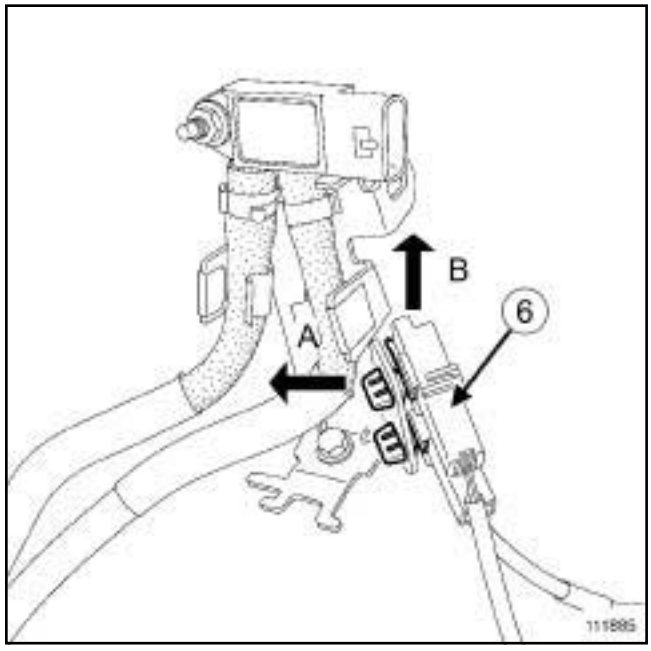

111885

- ❑ Disconnect the upstream and downstream temperature sensor offset connectors (**6**) .
- ❑ Unpick the upstream and downstream temperature sensor offset connectors (**6**) .

B84 or C84 or G84 or S84, and F9Q, and 803 or 804

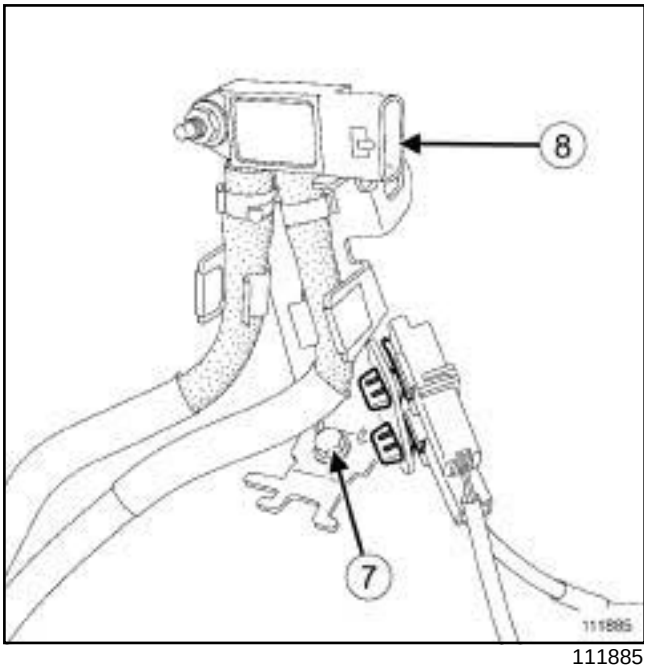

111885

❑ Remove:

- the mounting bolt (**7**) from the particle filter pressure sensor mounting.
- the particle filter pressure sensor assembly (**8**) and its mounting.

B84 or C84 or G84 or S84, and F9Q, and 803 or 804

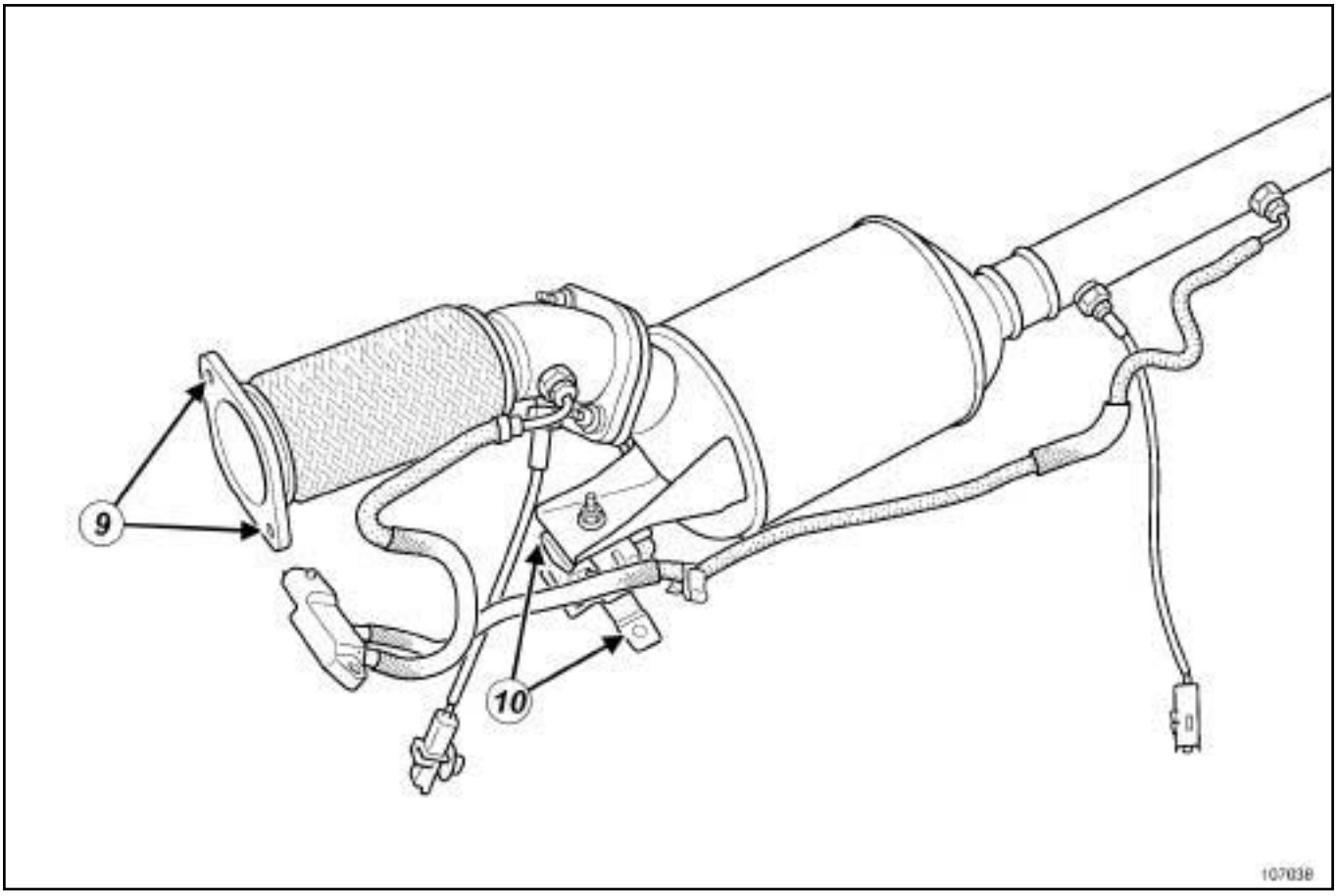

107038

❑ Remove:

- the mounting nuts (**9**) from the exhaust bracket between the connecting hose and the catalytic pre-converter,
- the mounting bolts (**10**) from the sub-frame rubber mounting bush,
- the particle filter.

❑ Once the particle filter has been removed, remove:

- the rubber mounting bush,
- the upstream and downstream temperature sensors from their adapters on the exhaust pipe (see **19B**, **Exhaust**, **Particle filter temperature sensors: Removal - Refitting**, page **19B-125**) ,
- the upstream pressure measurement tapping from its adapter on the exhaust pipe (see **19B**, **Exhaust**, **Particle filter pressure sensor: Removal - Refitting**, page **19B-114**) ,
- the flexible connection pipe (see **19B**, **Exhaust**, **Connecting hose: Removal - Refitting**, page **19B-142**) .

REFITTING

❑

WARNING

Always replace:

- the seal between the pipe and particle filter,
- the seal between the pipe and the catalytic pre-converter,
- any adapter on the exhaust pipe that has been loosened,

WARNING

Always clean the bearing surfaces of the connection hose - particle filter flanges thoroughly.

❑ With particle filter removed, refit:

- the connecting hose with new seals (see **19B**, **Exhaust**, **Connecting hose: Removal - Refitting**, page **19B-142**) ,

B84 or C84 or G84 or S84, and F9Q, and 803 or 804

- the upstream and downstream temperature sensors with their adapters to the exhaust pipe (see **19B**, **Exhaust**, **Particle filter temperature sensors: Removal - Refitting**, page **19B-125**) ,
- the upstream pressure measurement pipe on its adapter on the exhaust pipe (see **19B**, **Exhaust**, **Particle filter pressure sensor: Removal - Refitting**, page **19B-114**) ,
- the rubber mounting bush on the particle filter.

❏ Torque tighten the **nut mounting the rubber mounting bush on the particle filter (25 N.m)**.

❏ Place the pressure sensor and its mounting in the engine compartment before fitting the particle filter.

❏ Torque tighten:

- the **exhaust bracket nuts between the hose and the catalytic pre-converter (21 N.m)**.
- the **nuts mounting the rubber mounting bush on the sub-frame (25 N.m)**.

❏ Fit the exhaust trunking (see **19B**, **Exhaust**, **Exhaust: Parts and consumables for the repair work**, page **19B-6**) by applying sealing mastic for exhausts.

❏ Torque tighten the **exhaust trunking nut (25 N.m)** whilst ensuring that the exhaust pipe is aligned.

WARNING
When fitting the particle filter, be sure to pass the downstream pressure measurement connection behind the heat shield.

❏ Coat the threading of the downstream pressure measurement connection with **ANTI-SEIZE** high temperature grease or **COPPER-ALUMINIUM LUBRICANT**.

WARNING
Make sure that the grease does not run over the threading.

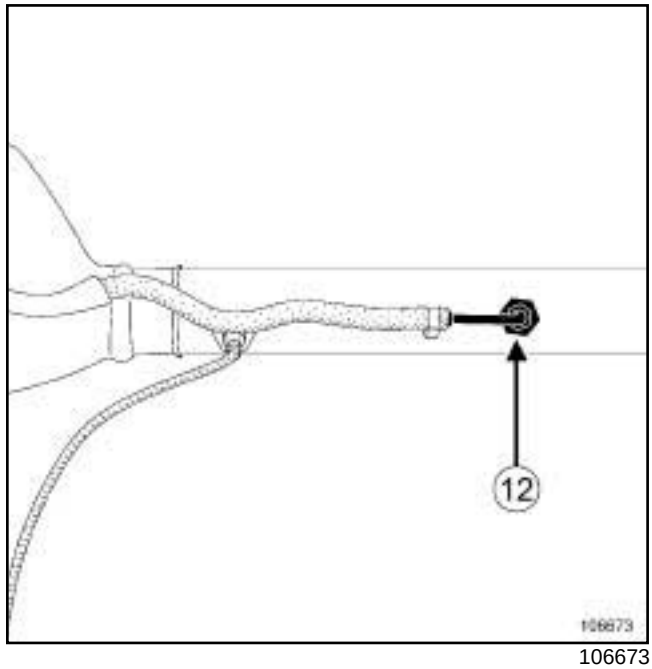

106673

❏

WARNING
Any exhaust pipe adapter (**12**) that has been loosened must be replaced.

B84 or C84 or G84 or S84, and F9Q, and 803 or 804

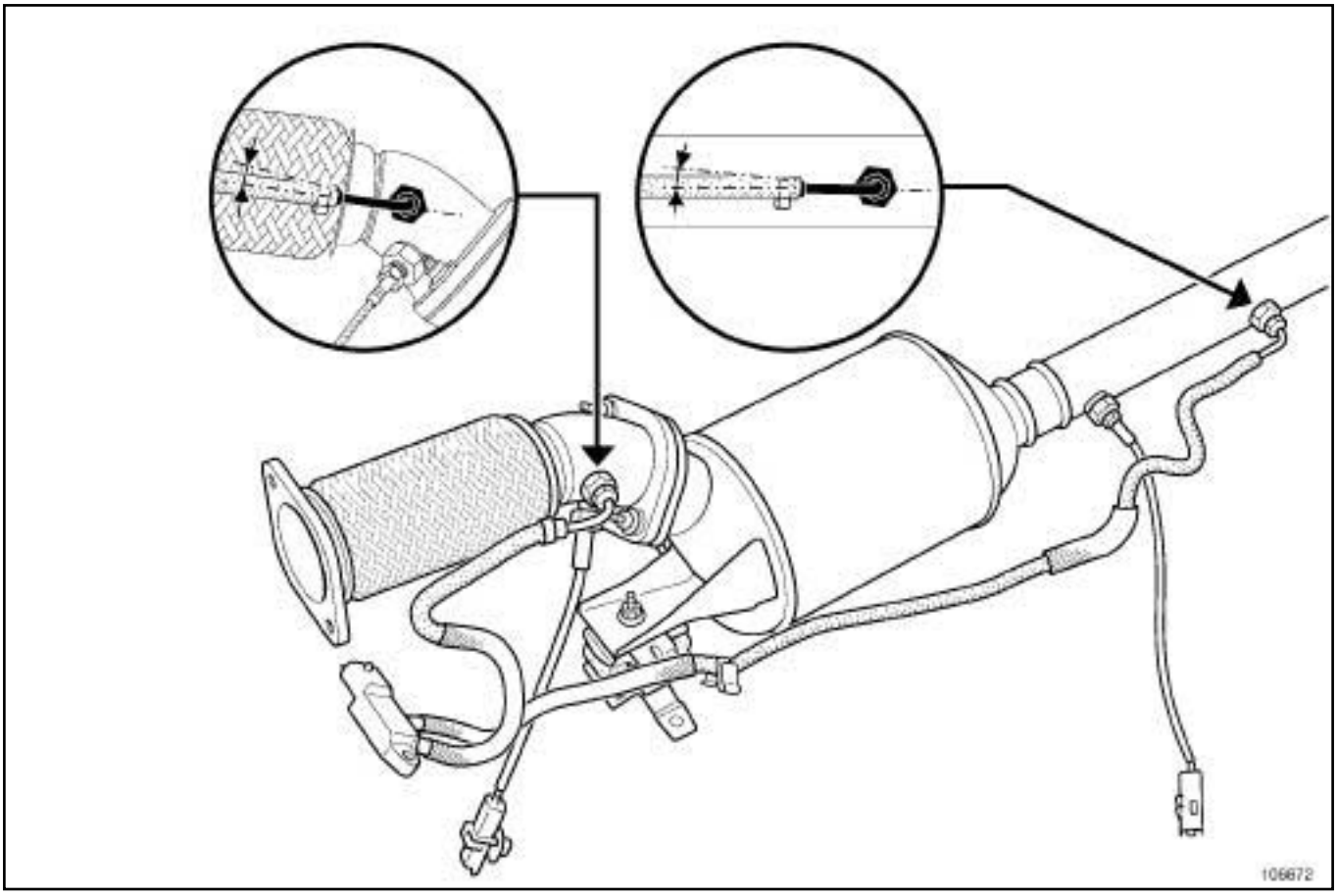

106672

- ❑ Fit the rigid part of the downstream pressure measurement connection then position it so that it is parallel (**+ 3°**) to the exhaust pipe longitudinal axis.
- ❑ Torque tighten the **downstream pressure measurement connection on its adapter (21 N.m)** screwed onto the exhaust pipe.
- ❑ Proceed in the reverse order to removal.
- ❑ Torque tighten:
  - the **connecting clip bolt between the rear silencer and the particle filter (25 N.m)**,
  - the **exhaust bracket nuts between the hose and the catalytic pre-converter (21 N.m)**,
  - the **nuts mounting the rubber mounting bush on the sub-frame (25 N.m)**.

WARNING

Make sure, after tightening the pressure measurement connections, that this pressure measurement connection has no low points (siphon) susceptible to water accumulation.

To do this:

- check that the rigid sections of the pressure connections are correctly positioned in relation to the exhaust pipe longitudinal axis,
- manipulate the pressure measurement connection retaining clips on the heat shield (turn the connection in the clip so as to avoid low points).

WARNING

Any damaged heat shields must be replaced.

- ❑ Make sure that there is no contact with the underbody.
- ❑ Connect the battery (see **Battery : Removal - Refitting**) (MR 364, 80A, Battery).
- ❑ Before restarting the engine, use the **diagnostic**

B84 or C84 or G84 or S84, and F9Q, and 803 or 804

tool to clear any faults stored by the injection computer.

WARNING

With the engine running, use a leak detector to carry out a **5-minute** leak test to check that there are no leaks from the exhaust pipe adapters.

REINITIALISING THE PARTICLE FILTER PARAMETERS

- To reinitialise the particle filter parameters (see **Fault finding - Replacement of components**) (MR 366, 13B, Diesel injection).

K9K, and 734

Essential special tooling	
Mot. 1199-01	Exhaust pipe cutter (diameter 35/50 mm and diameter 50/65mm). Complete kit in a case.

Essential equipment
diagnostic tool

Note:

Before carrying out work on the particle filter (see **19B**, **Exhaust**, **Exhaust: Precautions for repair**, page **19B-1**) .

IMPORTANT
Wear protective gloves during the operation.

IMPORTANT
Wear heat protective gloves during the operation.

The catalytic converter cannot be separated from the particle filter.

REMOVAL

I - REMOVAL PREPARATION OPERATION

❑ Position the vehicle on a two-post lift (see **Vehicle: Towing and lifting**) (MR 364, 02A, Lifting equipment).

❑ Disconnect the battery (see **Battery: Removal - Refitting**) (MR 364, 80A, Battery).

❑ Remove:

- the engine undertray bolts,
- the engine undertray.

WARNING
When removing the pressure measurement tapping from its adapter, the adapter ***(2)*** must be held with a lock wrench.

WARNING
The pressure measurement circuit must never be opened except at the adapters on the exhaust pipe.

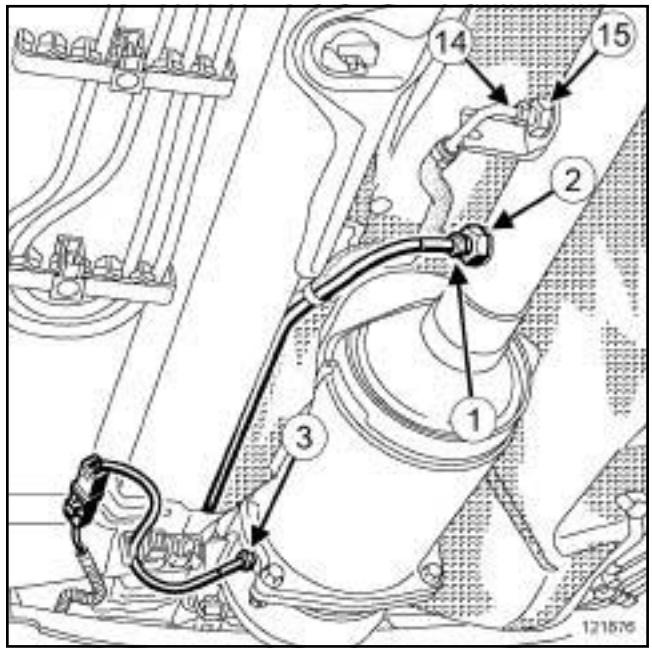

121876

❑ Remove:

- the temperature sensor (**1**) downstream of the particle filter from its adapter (**2**) on the exhaust pipe,
- the temperature sensor (**3**) upstream of the particle filter,
- the pressure measurement line downstream of the particle filter (**14**) from its adapter (**15**) .

K9K, and 734

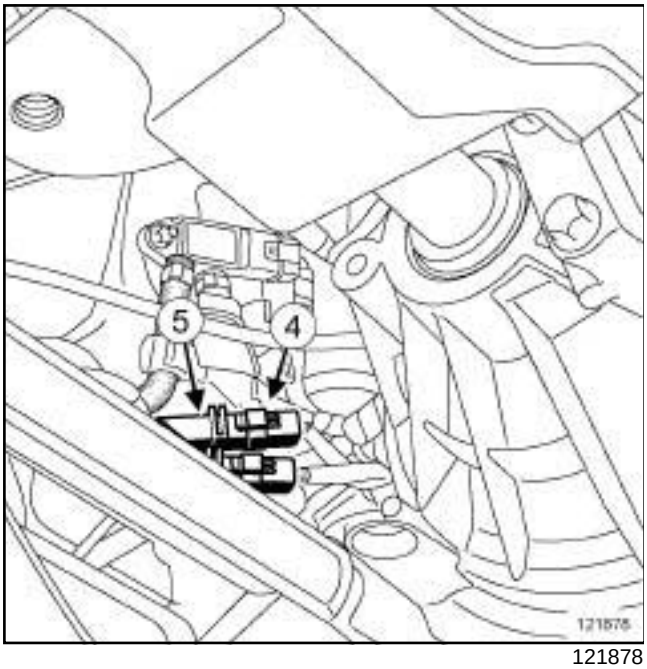

121878

- ❑ Disconnect the male connector (**4**) from the temperature sensor upstream of the catalytic converter.
- ❑ Disconnect the temperature sensor female connector (**5**) upstream of the catalytic converter from the retaining bracket.

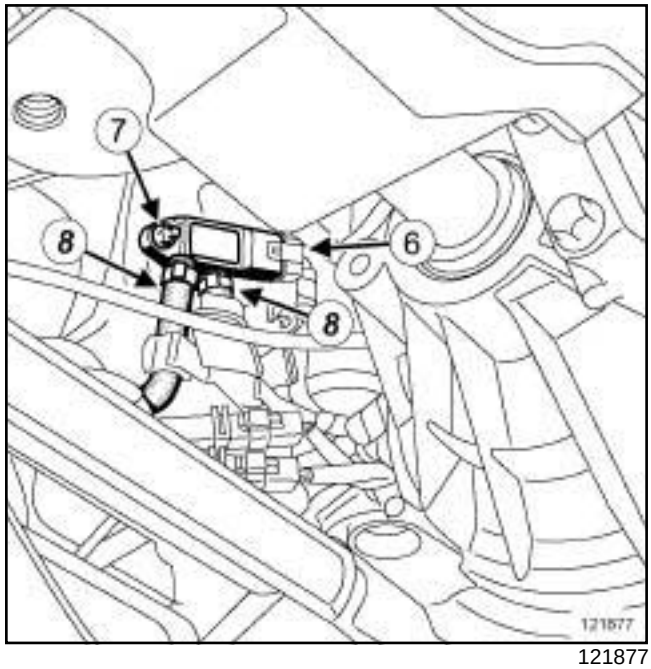

121877

- ❑ Disconnect the particle filter pressure sensor connector (**6**) .
- ❑ Remove the particle filter pressure sensor nut (**7**) .
- ❑ Detach the particle filter pressure sensor pipes (**8**) from the retaining bracket.
- ❑ Remove the particle filter pressure sensor from the retaining bracket.

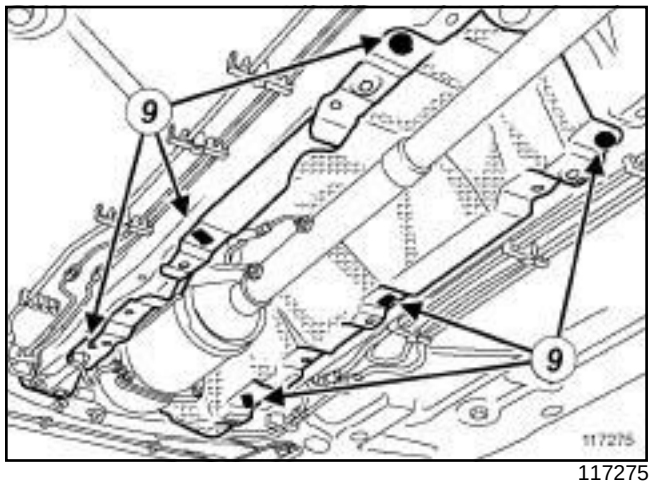

117275

- ❑ Remove the clips (**9**) from the heat shield.
- ❑ Remove the heat shield.

K9K, and 734

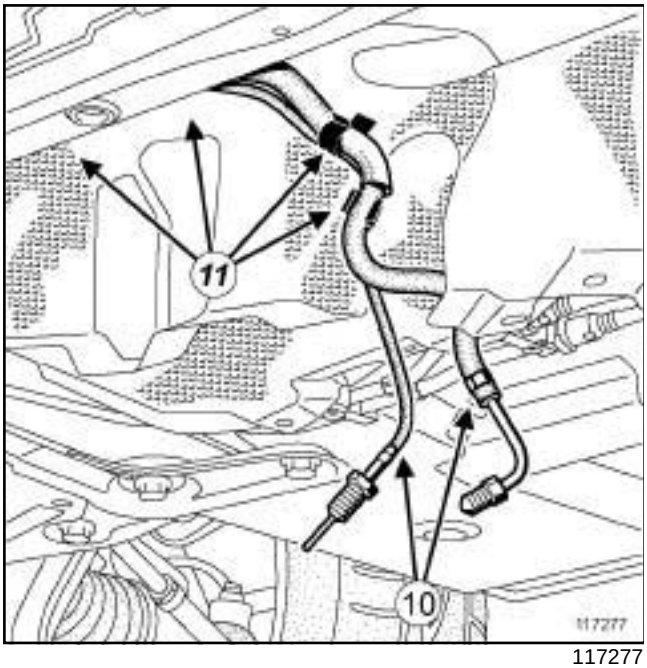

117277

❑ Detach the « particle filter downstream temperature sensor wiring harness - downstream pressure measurement pipe » (**10**) assembly from the heat shield by pressing on the clips (**11**) .

❑ Remove the « particle filter downstream temperature sensor wiring harness - downstream pressure measurement pipe » assembly from the heat shield.

❑ Unpick the particle filter downstream temperature sensor wiring harness from the downstream pressure measurement connection by pressing on the clips (**11**) .

II - OPERATION FOR REMOVAL OF PART CONCERNED

❑ Cut the exhaust pipe at the marking between the particle filter and the expansion chamber with the **(Mot. 1199-01)** (see **19B**, **Exhaust**, **Exhaust: Precautions for repair**, page **19B-1**) (MR 364, 19B, Exhaust) and (see **19B**, **Exhaust**, **Exhaust: Parts and consumables for the repair work**, page **19B-6**) .

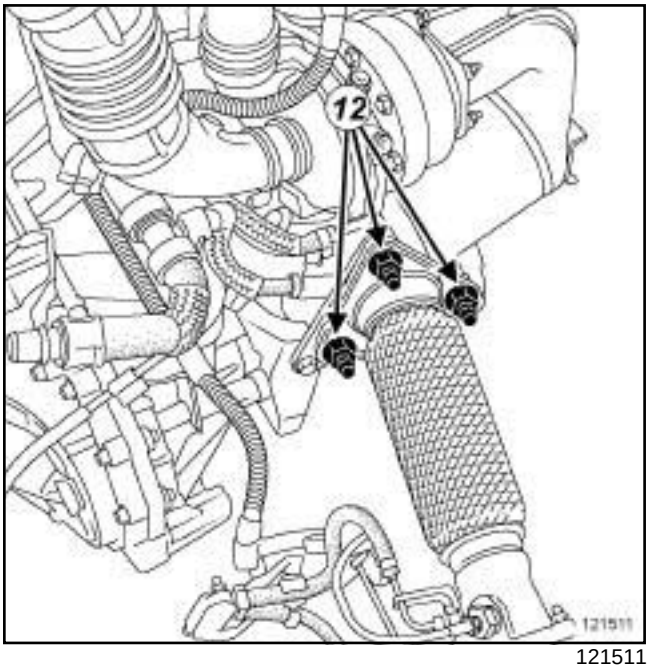

121511

❑ Remove the nuts (**12**) from the connecting hose on the catalytic pre-converter.

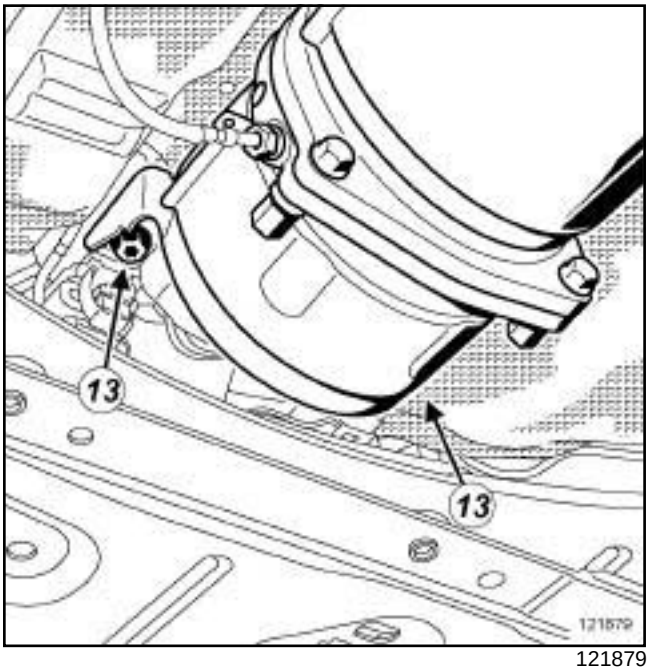

121879

❑ Remove the particle filter.

❑ Remove the particle filter rubber mounting bush bolts (**13**) from the sub-frame.

❑ If replacing the particle filter, on the bench remove:

- the catalytic converter upstream temperature sensor (see **19B**, **Exhaust**, **Particle filter temperature sensors: Removal - Refitting**, page **19B-125**) ,

K9K, and 734

- the particle filter pressure sensor (see **19B**, **Exhaust**, **Particle filter pressure sensor: Removal - Refitting**, page **19B-114**) ,
- the flexible connection pipe (see **19B**, **Exhaust**, **Connecting hose: Removal - Refitting**, page **19B-142**) .

REFITTING

I - REFITTING PREPARATION OPERATION

❑ Deburr the cut marks on the exhaust pipe and on the particle filter if it is to be re-used.

❑

> **WARNING**
> When fitting the particle filter, be sure to pass the downstream pressure measurement connection behind the heat shield.

> **WARNING**
> Always replace any adapter that has been removed from the exhaust pipe.

❑ Always clean the bearing faces on the connections:

- catalytic pre-converter - connecting hose,
- connecting hose - particle filter (if removed).

> **WARNING**
>
> Replace:
>
> - the seal between the hose and particle filter,
> - the seal between the hose and the catalytic pre-converter,
> - any adapter on the exhaust pipe that has been removed,

> Note:
>
> Make sure that the grease does not run over the threading.

❑ Coat the threadings with **COPPER ANTI-SEIZE GREASE** or **COPPER-ALUMINIUM LUBRICANT** (see **Vehicle: Parts and ingredients for the repairwork**) (MR 364, 04B, Consumables - Products):

- on the upstream pressure measurement pipe union,
- on the downstream pressure measurement pipe union,
- on the temperature sensor upstream of the catalytic converter.

❑ If replacing the particle filter, refit:

- the connecting hose (see **19B**, **Exhaust**, **Connecting hose: Removal - Refitting**, page **19B-142**) ,
- the particle filter pressure sensor (see **19B**, **Exhaust**, **Particle filter pressure sensor: Removal - Refitting**, page **19B-114**) ,
- the catalytic converter upstream temperature sensor (see **19B**, **Exhaust**, **Particle filter temperature sensors: Removal - Refitting**, page **19B-125**) .

II - REFITTING OPERATION FOR PART CONCERNED

❑ Refit the new seal between the catalytic pre-converter and the flexible pipe.

❑ Fit:

- particle filter.
- a new after-sales sleeve and follow the instructions (see **19B**, **Exhaust**, **Exhaust: Precautions for repair**, page **19B-1**) .

❑ Refit:

- the particle filter rubber mounting bush bolts on the sub-frame,
- the flexible pipe nuts on the catalytic pre-converter.

III - FINAL OPERATION.

❑ Attach the particle filter downstream temperature sensor wiring harness to the downstream pressure measurement pipe.

❑ Fit the « particle filter downstream temperature sensor wiring harness - downstream pressure measurement pipe » assembly behind the heat shield.

❑ Attach the « particle filter downstream temperature sensor wiring harness - downstream pressure measurement pipe » assembly to the heat shield.

❑ Fit the heat shield.

❑ Refit the heat shield clips.

❑ Fit the particle filter pressure sensor to the retaining bracket.

❑ Clip the particle filter pressure sensor pipes onto the retaining bracket.

❑ Refit the particle filter pressure sensor nut.

❑ Connect the particle filter pressure sensor connector.

K9K, and 734

- ❑ Clip the temperature sensor female connector upstream of the catalytic converter onto the retaining bracket.
- ❑ Connect the temperature sensor male connector upstream of the catalytic converter.
- ❑ Coat the particle filter upstream and downstream temperature sensor threadings with **COPPER ANTI-SEIZE GREASE** or **COPPER-ALUMINIUM LUBRICANT** (see **Vehicle: Parts and ingredients for the repairwork**) (MR 364, 04B, Consumables - Products).
- ❑ Refit:
  - the temperature sensor upstream of the particle filter,
  - the temperature sensor downstream of the particle filter on its adapter,
  - the engine undertray bolts,
  - the engine undertray.
- ❑ Connect the battery (see **Battery : Removal - Refitting**) (MR 364, 80A, Battery).
- ❑ Before starting the engine, use the **diagnostic tool** to clear any faults stored by the injection computer.
- ❑ If replacing the particle filter, reinitialise the particle filter parameters (see **Fault finding - Replacement of components**) (MR 366, 13B, Diesel injection).

M9R, and 724

Essential equipment
diagnostic tool

REMOVAL

I - REMOVAL PREPARATION OPERATION

❑ Position the vehicle on a two-post lift (see **Vehicle: Towing and lifting**) (MR 364, 02A, Lifting equipment).

❑ Remove the front engine cover.

❑ Disconnect the battery (see **Battery: Removal - Refitting**) (MR 364, 80A, Battery).

❑ Remove:

- the engine undertray bolts,
- the engine undertray.

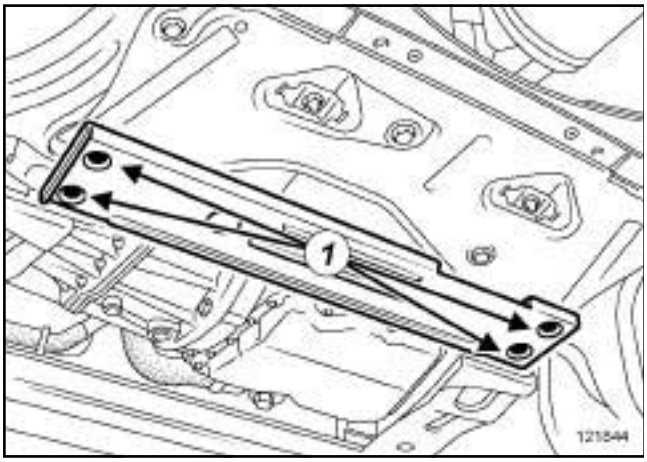

121844

❑ Remove:

- the reinforcement lower cross member nuts (**1**) ,
- the reinforcement lower cross member.

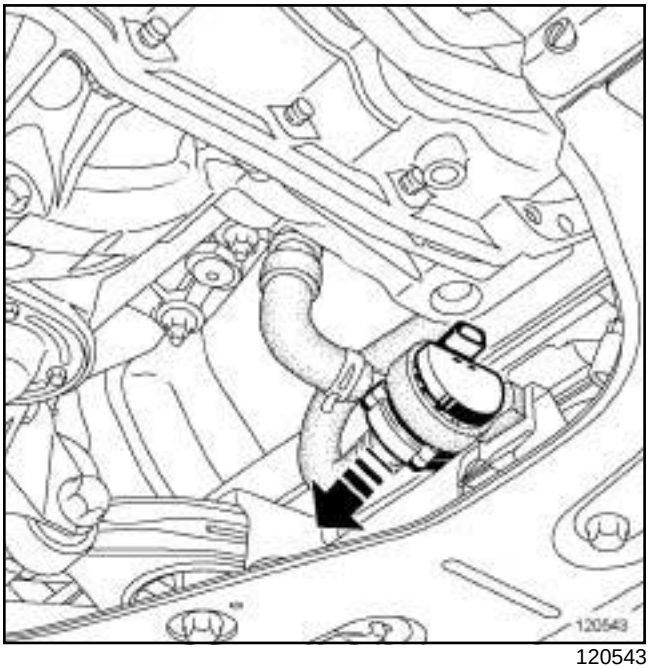

120543

❑ Remove the electric coolant pump from its mounting.

II - OPERATION FOR REMOVAL OF PART CONCERNED

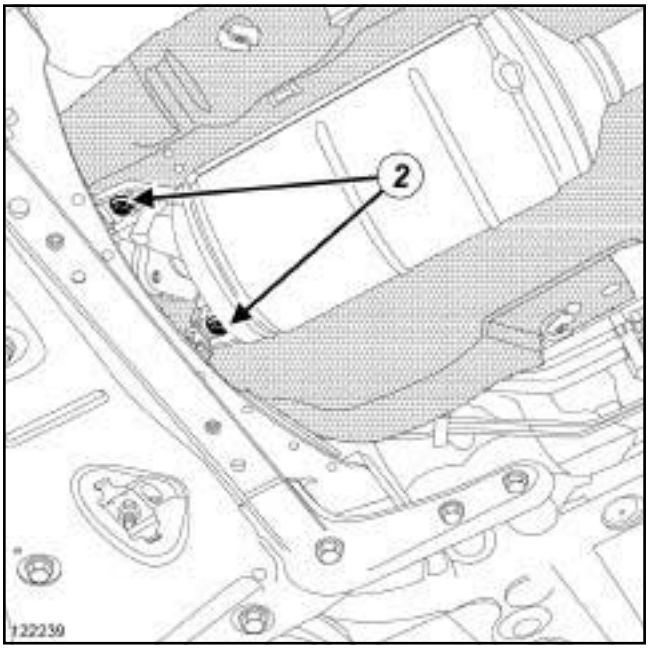

122239

❑ Remove the rubber mounting bush nuts (**2**) from the sub-frame

M9R, and 724

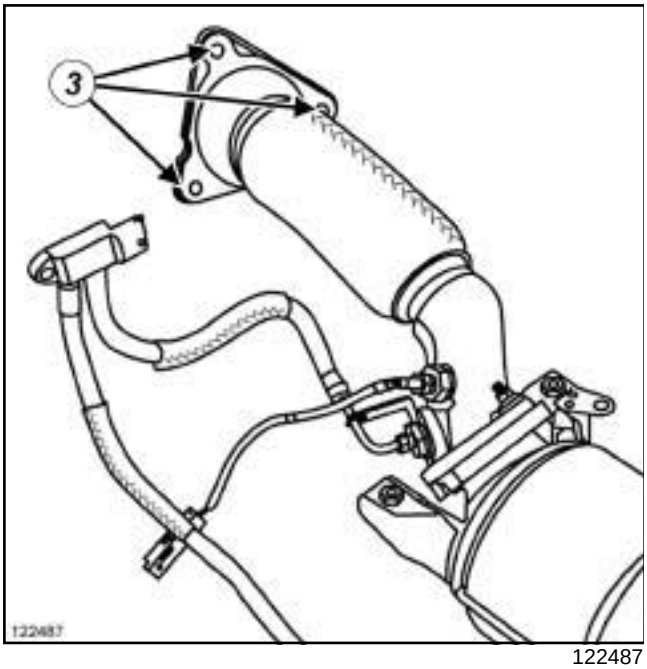

122487

❑ Remove the nuts (**3**) from the exhaust bracket between the flexible pipe and the catalytic pre-converter.

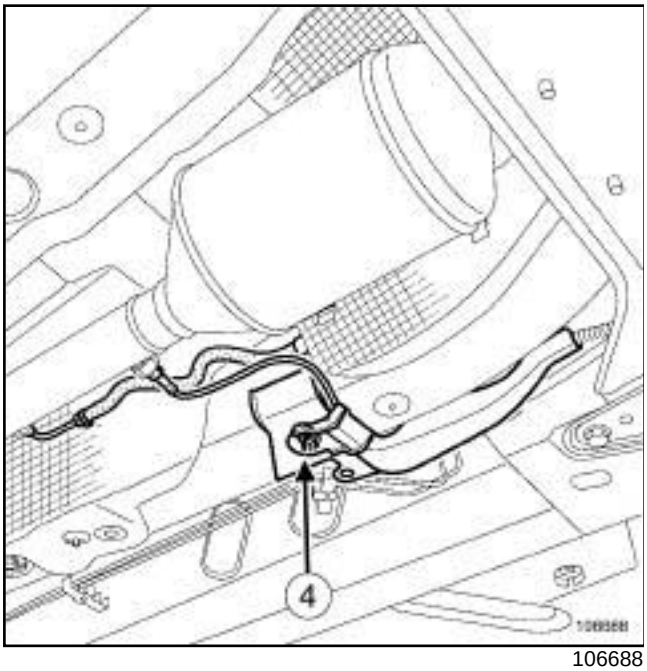

106688

❑ Remove the particle filter heat shield clip nut (**4**) .

❑ Remove the particle filter heat shield.

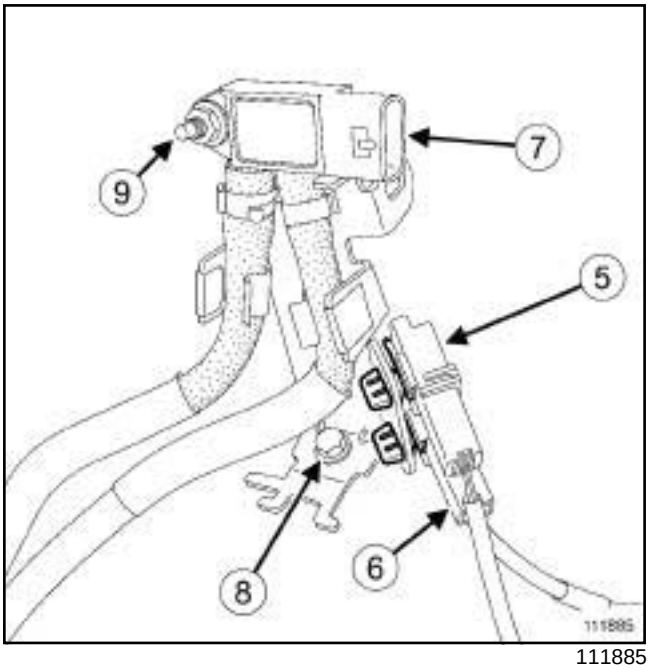

111885

❑ Disconnect:

- the upstream temperature sensor connector (**5**) ,
- the downstream temperature sensor connector (**6**) ,
- the particle filter pressure sensor connector (**7**) .

❑ Remove from their mountings:

- the upstream temperature sensor connector,
- the downstream temperature sensor connector.

❑ Remove:

- the steering rack bracket nut (**8**) ,
- the particle filter pressure sensor nut (**9**) .

❑ Unclip the particle filter pressure sensor connector from its mounting.

M9R, and 724

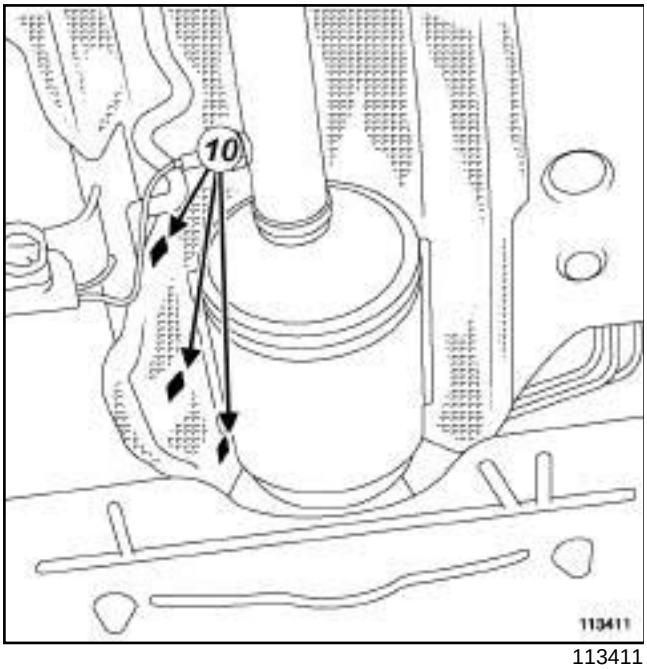

113411

❑ Unclip:

- the heat shield downstream pressure measurement connection from the particle filter at (**10**) ,
- the heat shield downstream temperature measurement connection from the particle filter at (**10**) .

❑ Pass the connections into the engine compartment leaving them connected to the pressure sensor.

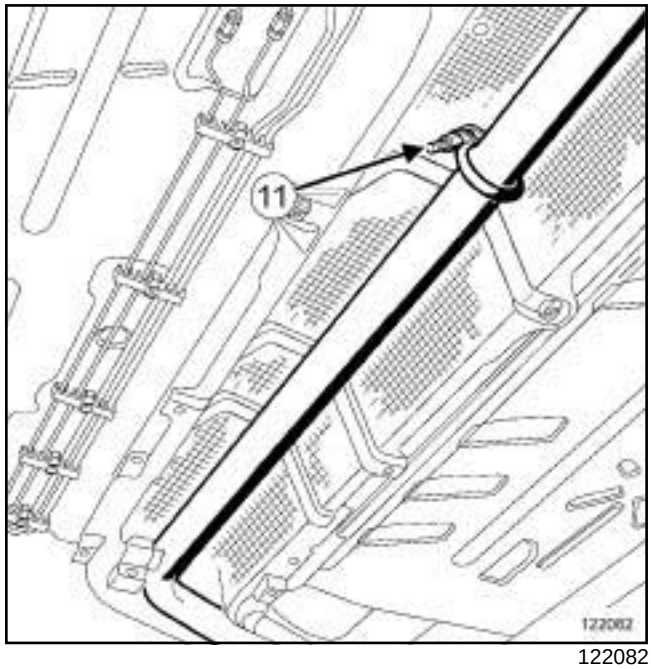

122082

❑ Remove the clip (**11**) between the particle filter and the connecting pipe.

❑ Remove the particle filter from the intermediate pipe.

❑ Remove:

- the « particle filter - connecting hose - pressure sensor - temperature sensor » assembly,
- the seal between the connecting hose and the catalytic converter.

❑ Remove the following from particle filter assembly:

- the particle filter downstream pressure sensor (see **19B**, **Exhaust**, **Particle filter pressure sensor: Removal - Refitting**, page **19B-114**) ,
- the particle filter downstream temperature sensor (see **19B**, **Exhaust**, **Particle filter temperature sensors: Removal - Refitting**, page **19B-125**) ,
- the flexible connection pipe (see **19B**, **Exhaust**, **Connecting hose: Removal - Refitting**, page **19B-142**) .

REFITTING

I - REFITTING PREPARATIONS OPERATION

❑

WARNING
To ensure that the exhaust pipe is correctly sealed, replace any loose adapters on the exhaust pipe.

M9R, and 724

❏ Clean the pressure faces:

- of the connector hose and particle filter,
- of the catalytic converter and the connecting hose.

❏ Always replace:

- the seal between the connecting hose and particle filter,
- the seal between the connecting hose and the catalytic pre-converter.

II - REFITTING OPERATION FOR PART CONCERNED

❏ With particle filter removed, refit:

- the connecting hose with a new seal (see **19B**, **Exhaust**, **Connecting hose: Removal - Refitting**, page **19B-142**) ,
- the particle filter downstream temperature sensor (see **19B**, **Exhaust**, **Particle filter temperature sensors: Removal - Refitting**, page **19B-125**) ,
- the particle filter downstream pressure sensor (see **19B**, **Exhaust**, **Particle filter pressure sensor: Removal - Refitting**, page **19B-114**) .

❏ Refit:

- the seal between the connecting hose and the catalytic converter,
- the « particle filter - connecting hose - pressure sensor - temperature sensor » assembly.

> **WARNING**
> When fitting the particle filter, be sure to pass the downstream pressure measurement connection behind the heat shield.

❏ Fit the particle filter to the intermediate pipe.

❏ Refit the clip between the particle filter and the intermediate pipe.

❏ Pass the particle filter downstream temperature measurement connection and the particle filter downstream pressure measurement connection behind the heat shield.

❏ Clip:

- the downstream temperature measurement connection to the particle filter heat shield,
- the downstream pressure measurement connection to the particle filter heat shield.

❏ Clip the particle filter pressure sensor connector onto its mounting.

❏ Refit:

- the particle filter pressure sensor nut,
- the steering rack bracket nut.

❏ Remove from their mountings:

- the downstream temperature sensor connector,
- the upstream temperature sensor connector.

❏ Connect:

- the particle filter pressure sensor connector,
- the downstream temperature sensor connector,
- the upstream temperature sensor connector.

❏ Fit the particle filter heat shield.

❏ Refit:

- the particle filter heat shield clip nut,
- the exhaust bracket nuts between the connecting hose and the catalytic pre-converter,
- the rubber mounting bush nuts on the sub-frame.

III - FINAL OPERATION.

❏ Fit the electric coolant pump to its mounting.

❏ Refit:

- the reinforcement lower cross member,
- the reinforcement lower cross member nuts.
- the engine undertray,
- the engine undertray bolts.

❏ Connect the battery (see **Battery: Removal - Refitting**) (MR 364, 80A, Battery).

❏ Refit the engine cover.

❏ Before restarting the engine, use the **diagnostic tool** to clear any faults stored by the injection computer.

❏ To reinitialise the particle filter parameters (see **Fault finding - Replacement of components**) (MR 366, 13B, Diesel injection).

B84 or C84, and F9Q, and 803 or 804

Essential special tooling	
Mot. 1329	Oil filter removing tool (76 mm diameter).
Mot. 1018	Sump plug tool.

Essential equipment
kit for particle filter
kit for twin exhaust
diagnostic tool

Tightening torques ▽	
engine drain plug	**20 Nm**
rubber mounting bush on the body	**21 Nm**
rubber mounting bush on the connector pipe	**8 Nm**

Note:

Forced regeneration can only be carried out after the « SERVICE» warning light comes on along with the message «REGENERATE PARTICLE FILTER» or the orange «CHECK EMISSION CONTROL» warning light (see **Driver's Handbook for vehicle concerned**).

I - INSTRUCTIONS FOR CARRYING OUT FORCED REGENERATION OF THE PARTICLE FILTER

Precautions to be taken during forced regeneration of the particle filter

❑ Two additional equipment kits for workshop exhaust gas extractors are available (see **2005 garage equipment catalogue**), both are approved for use at the high temperatures produced during forced regeneration of a particle filter, for example.

These two kits approved for particle filter regeneration are:

- the **kit for particle filter** for use with vehicles fitted with a single exhaust pipe on the silencer,
- the **kit for twin exhaust** for use with vehicles with a twin exhaust pipe on the silencer.

IMPORTANT

During forced regeneration of the particle filter, the temperature of the exhaust pipe rises significantly.

Always use one of these kits approved for use at the high temperatures generated during forced regeneration, whether this is being carried out in the workshop with an exhaust gas extractor or outside the workshop.

Ensure that when in use, the kit is not touching the rear bumper when carrying out forced regeneration of the particle filter.

B84 or C84, and F9Q, and 803 or 804

Twin exhaust pipe kit special features

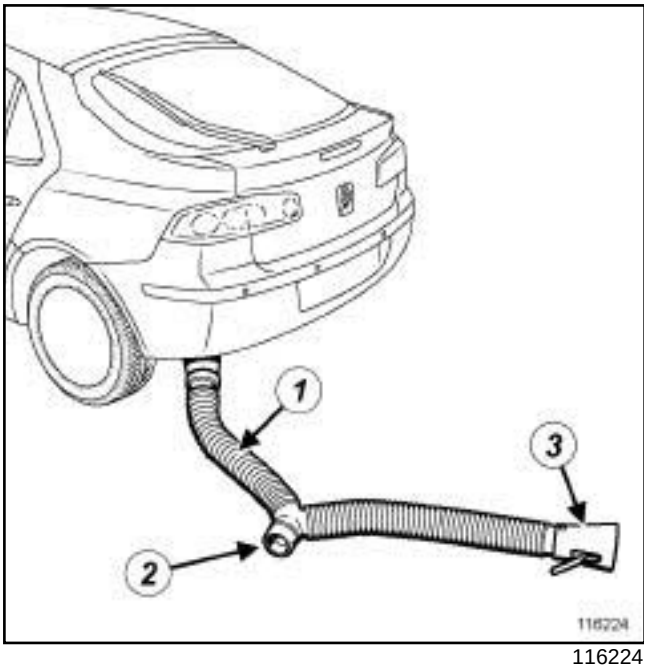

116224

❑

Note:

Ensure, when using a **kit for twin exhaust** (**1**) on a single exit exhaust system:

- that an exhaust gas extractor is fitted to holes (**2**) and (**3**) if forced regeneration is being carried out in the workshop,
- that hoses (**2**) and (**3**) are positioned to direct the hot exhaust gases away from another vehicle or a person, if the operation is being carried out outside the workshop.

II - PROCEDURE FOR FORCED REGENERATION OF THE PARTICLE FILTER USING THE CLIP DIAGNOSTIC TOOL

❑ Connect the **diagnostic tool** to the vehicle.

IMPORTANT

During forced regeneration of the particle filter, the temperature of the exhaust pipe rises significantly.

Always use one of these kits approved for use at the high temperatures generated during forced regeneration, whether this is being carried out in the workshop with an exhaust gas extractor or outside the workshop.

Ensure that when in use, the kit is not touching the rear bumper when carrying out forced regeneration of the particle filter.

WARNING

To prevent engine racing, check the engine oil level using the dipstick before running the forced regeneration command.

The engine oil level must be between the « MIN » and « MAX » marks on the dipstick.

❑ For the particle filter forced regeneration procedure, see **MR 366 Fault finding, 13B, Diesel injection, Fault finding - Interpretation of commands, Particle filter regeneration**.

Note:

If required, the forced regeneration procedure may be stopped by pressing the engine Start button twice in succession.

Note:

Strong odours and thick smoke are to be expected during forced regeneration of the particle filter.

❑ When forced regeneration of the particle filter is complete, use the diagnostic tool to:

- deal with the present faults,
- clear the stored faults.

B84 or C84, and F9Q, and 803 or 804

❑ Position the vehicle on a two-post lift (see **MR 364 Mechanics, 02A, Lifting equipment, Towing and lifting**).

> **IMPORTANT**
> Allow the engine to cool before draining the oil.

❑ Remove the oil filter using the **(Mot. 1329)** for **F9Q** engines.

❑ Coat the new oil filter sealing ring with engine oil.

❑ Tighten the oil filter until the seal makes contact with the engine.

❑ Tighten the new oil filter **manually** 3/4 of a turn.

❑ Wipe away any excess oil.

❑ Remove:

- the engine oil filler cap,
- the engine undertray,
- the sump drain plug using the **(Mot. 1018)** or **an 8 mm square male drive drain plug socket**.

❑ Allow all the engine oil to flow into a drain tray.

Rubber-lipped seal

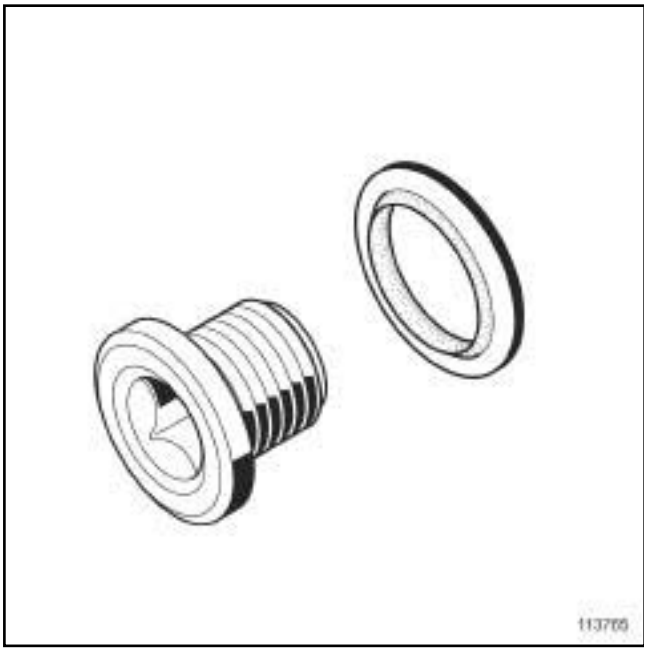

113765

❑ Refit the new seal (no direction of fitting for rubber-lipped seals).

❑ Tighten to torque the **engine drain plug (20 Nm)**.

❑ Clean any traces of the drained oil from the sump.

❑ Refit the engine undertray.

❑ Refill the engine oil.

❑ Refit the filler cap.

❑ Wait for **10 minutes**.

❑ Check the oil level using the dipstick.

❑ Top up if necessary.

> Note:
> The engine oil level must be between the « MIN » and « MAX » marks on the dipstick.

❑

> Note:
> After each particle filter forced regeneration, always replace the exhaust system connector pipe rubber mounting bush.

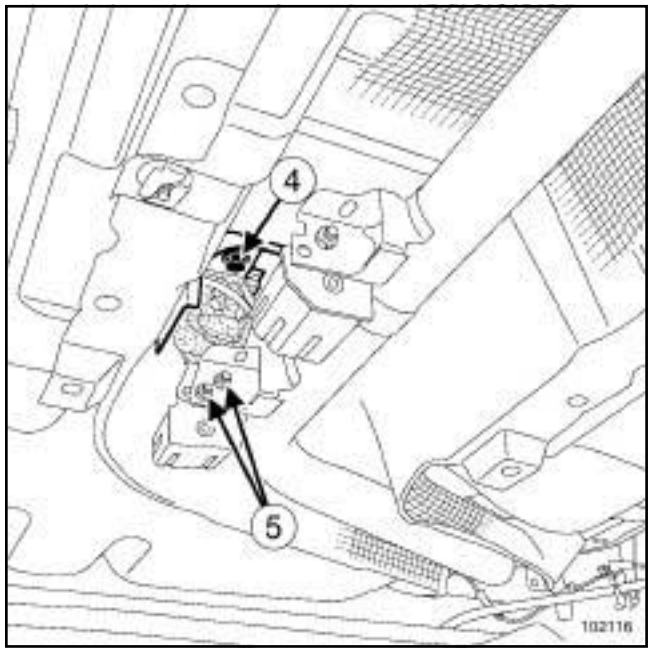

102116

❑ Remove:

- the exhaust system connector pipe rubber mounting bush mounting bolt (**4**) on the body,
- the exhaust system connector pipe rubber mounting bush mounting bolt (**5**) on the connector pipe.

❑ Fit the new exhaust system connector pipe rubber mounting bush.

❑ Tighten to torque:

- the bolt mounting the **rubber mounting bush on the body (21 Nm)**,
- the bolts mounting the **rubber mounting bush on the connector pipe (8 Nm)**.

K9K, and 734

Essential equipment
kit for particle filter
kit for twin exhaust
diagnostic tool

Note:

Forced regeneration should only be carried out after the « SERVICE » warning light has come on accompanied by the «REGENERATE PARTICLE FILTER» message or the orange «CHECK EMISSIONS» warning light (see **Driver's Handbook for vehicle concerned**).

I - INSTRUCTIONS FOR CARRYING OUT FORCED REGENERATION OF THE PARTICLE FILTER

Precautions to be taken during forced regeneration of the particle filter

❑ There are currently two additional kits for extracting exhaust gases in the workshop (see **Garage equipment catalogue 2005**), both of which are approved for the high temperatures produced during particle filter forced regeneration.

The two kits approved for particle filter regeneration are:

- the **kit for particle filter** for use with vehicles fitted with a single exit silencer,
- the **kit for twin exhaust** for use with vehicles equipped with a twin exhaust pipe on the silencer.

IMPORTANT

During forced regeneration of the particle filter, the temperature of the exhaust pipe rises significantly.

Always use one of the two kits approved for the high temperatures reached during forced regeneration, whether the operation is carried out in the workshop using an exhaust gas extractor, or outside the workshop.

Ensure that when in use, the kit is not touching the rear bumper when carrying out forced regeneration of the particle filter.

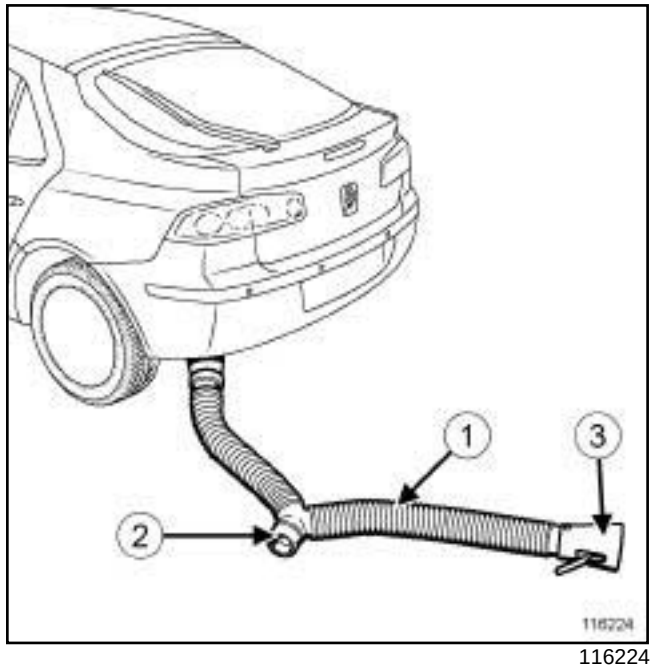

116224

❑

Note:

When using a **kit for twin exhaust** (**1**) on a single exhaust pipe:

- be sure to place an exhaust gas extractor over the openings (**2**) and (**3**) if forced regeneration takes place in the workshop,
- that openings (**2**) and (**3**) are positioned to direct the hot exhaust gases away from another vehicle or a person, if the operation is being carried out outside the workshop.

II - PROCEDURE FOR FORCED REGENERATION OF THE PARTICLE FILTER USING THE DIAGNOSTIC TOOL

❑ Connect the **diagnostic tool** to the vehicle.

IMPORTANT

During forced regeneration of the particle filter, the temperature of the exhaust pipe rises significantly.

Always use one of the two kits approved for the high temperatures reached during forced regeneration, whether the operation is carried out in the workshop using an exhaust gas extractor, or outside the workshop.

Ensure that when in use, the kit is not touching the rear bumper when carrying out forced regeneration of the particle filter.

K9K, and 734

❑ To prevent engine racing, check the engine oil level using the dipstick before running the forced regeneration command.

> Note:
>
> The engine oil level must be between the « MIN » and « MAX » marks on the dipstick.

❑ For the particle filter forced regeneration procedure (see **Fault finding - Interpretation of commands**) (MR 366, 13B, Diesel injection).

> Note:
>
> If necessary, forced regeneration can be stopped by switching off the ignition.

> Note:
>
> Strong odours and thick smoke are to be expected during forced regeneration of the particle filter.

❑ When forced regeneration of the particle filter has finished, and using the **diagnostic tool** :

- deal with the present faults,
- clear the stored faults.

❑ Wait for **10 minutes**.

> **WARNING**
>
> Always check the oil level using the dipstick.
>
> Do not exceed the maximum level on the dipstick (could destroy the engine).
>
> Correct the engine oil level if necessary before delivering the vehicle to the customer.

❑ Check the oil level using the dipstick.

❑ Adjust the oil level, if necessary.

❑ Always replace the intermediate exhaust pipe rubber mounting bush after each particle filter forced regeneration.

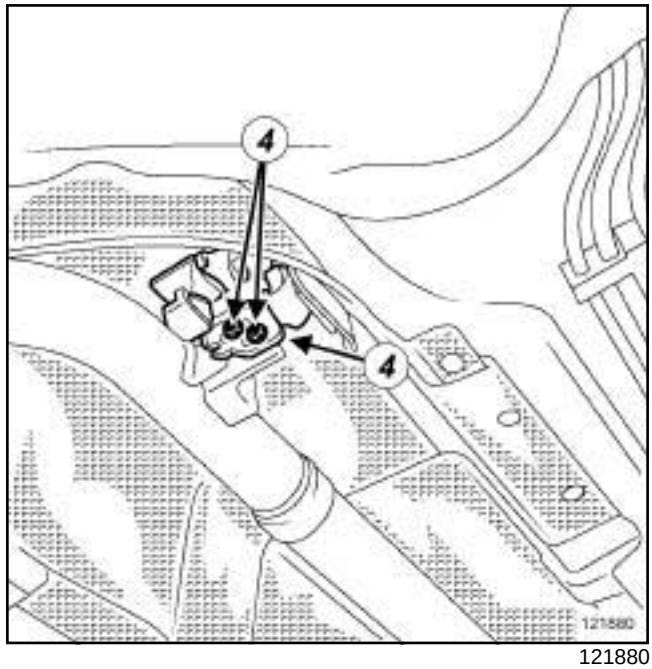

121880

❑ Remove:

- the intermediate pipe rubber mounting bush bolts (**4**) ,
- the intermediate pipe rubber mounting bush.

❑ Refit:

- the new intermediate pipe rubber mounting bush,
- the intermediate pipe rubber mounting bush bolts.

Exhaust gas temperature sensor: Removal - Refitting

B84 or C84 or G84 or S84, and F9Q, and 803 or 804 or 816

Essential special tooling	
Mot. 1807	Spanner for tightening exhaust gas temperature sensor

Tightening torques ▽	
exhaust gas temperature sensor	**40 Nm**

REMOVAL

❑ Consumables:

- **COPPER ANTI-SEIZE** high temperature grease,
- **COPPER-ALUMINIUM LUBRICANT**.

REMOVAL

I - REMOVAL PREPARATION OPERATION

❑ Position the vehicle on a two-post lift (see **Vehicle: Towing and lifting**) (MR 364, 02A, Lifting equipment).

❑ Disconnect the battery (see **Battery: Removal - Refitting**) (MR 364, 80A, Battery).

❑ Remove the front engine cover.

II - OPERATION FOR REMOVAL OF PART CONCERNED

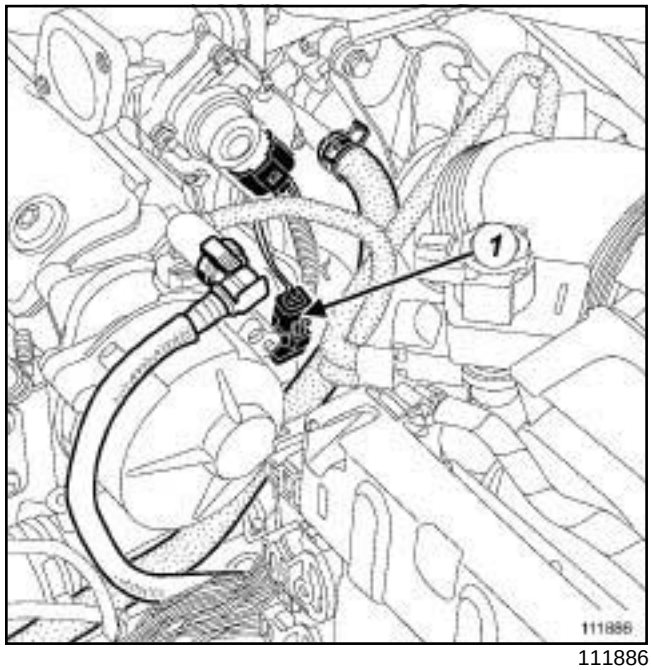

111886

❑ Disconnect the turbocharger upstream temperature sensor connector (**1**) .

❑ Remove the scuttle panel grille (see **Scuttle panel grille: Removal - Refitting**) (MR 365, 56A, Mechanisms and accessories).

❑ Remove the scoop under the scuttle panel grille (see **Scuttle panel grille: Removal - Refitting**) (MR 365, 56A, Mechanisms and accessories).

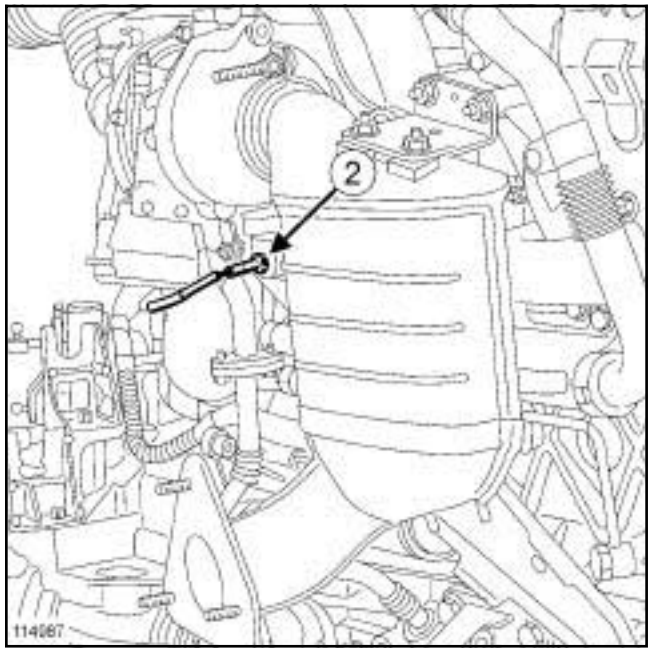

114987

❑ Remove the exhaust temperature sensor (**2**) using the **(Mot. 1807)**.

B84 or C84 or G84 or S84, and F9Q, and 803 or 804 or 816

REFITTING

I - REFITTING PREPARATIONS OPERATION

❑ Clean the exhaust gas temperature sensor using a clean, dry, lint-free cloth if it is being reused.

II - REFITTING OPERATION FOR PART CONCERNED

❑ Coat the temperature sensor threading with **COPPER ANTI-SEIZE** high temperature grease or **COPPER-ALUMINIUM LUBRICANT**,

❑ Fit the exhaust gas temperature sensor nut without tightening it.

❑ Torque tighten the **exhaust gas temperature sensor (40 Nm)** using the **(Mot. 1807)**.

❑ Connect the temperature sensor connector.

❑ Refit:

- the scoop under the scuttle panel grille (see **Scuttle panel grille: Removal - Refitting**) (MR 365, 56A, Mechanisms and accessories),
- the scuttle panel grille (see **Scuttle panel grille: Removal - Refitting**)

❑ Refit the scuttle panel grille (see **56A, Exterior equipment, Scuttle panel grille: Removal - Refitting**).

III - FINAL OPERATION.

❑ Disconnect the battery (see **Battery: Removal - Refitting**) (MR 364, 80A, Battery).

Exhaust gas temperature sensor: Removal - Refitting

B84 or C84 or E84 or K84, and M9R, and 722 or 724

Tightening torques ▽	
exhaust gas temperature sensor	**40 Nm**

REMOVAL

I - REMOVAL PREPARATION OPERATION

❑ Remove:

- the engine cover,
- the front wiper arms (see **Windscreen wiper arm: Removal - Refitting**) (MR 364, 85A, Wiping - Washing),
- the scuttle panel grille (see **Scuttle panel grille: Removal - Refitting**) (MR 365, 56A, Exterior equipment),
- the acoustic protection clips on the scuttle panel partition,
- the acoustic protection.

II - OPERATION FOR REMOVAL OF PART CONCERNED

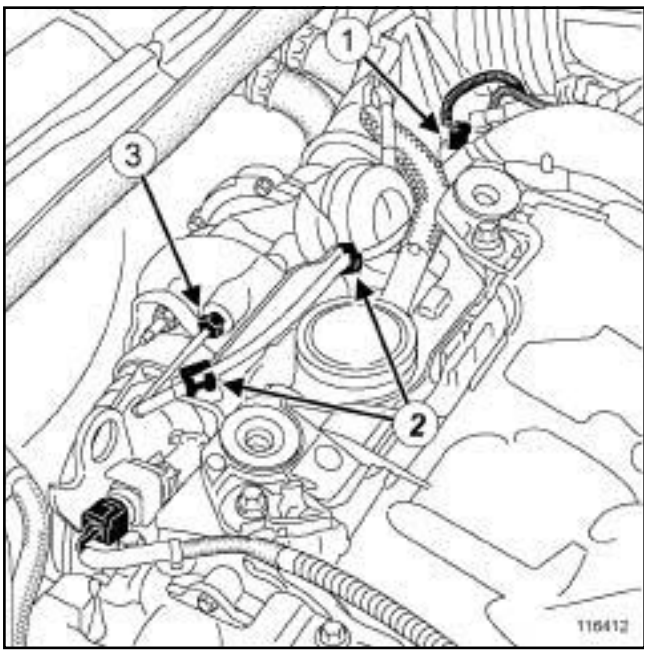

116412

❑ Disconnect the exhaust gas temperature sensor connector (**1**) .

❑ Unclip:

- the exhaust gas temperature sensor connector from its mounting.
- the exhaust gas temperature sensor wiring harness at (**2**) .

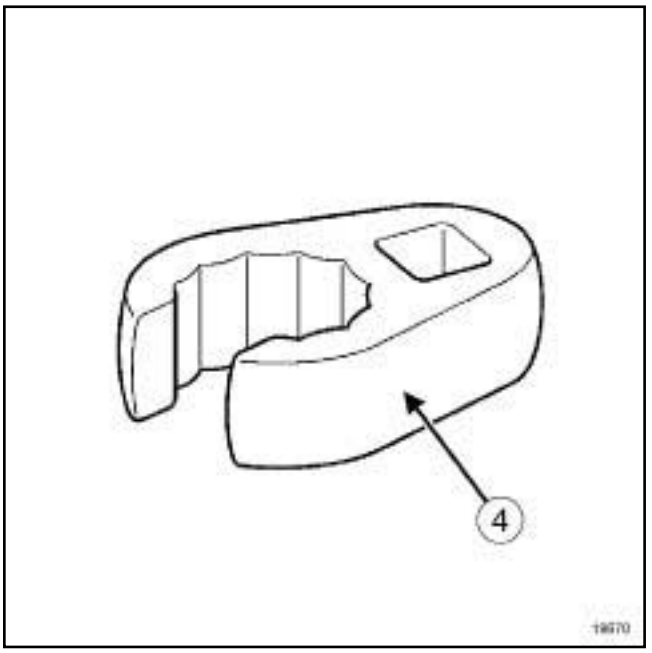

19670

❑ Remove the exhaust gas temperature sensor ***(3)*** with a crow foot wrench (**4**) .

REFITTING

I - REFITTING OPERATION FOR PART CONCERNED

❑ Refit the exhaust gas temperature sensor.

B84 or C84 or E84 or K84, and M9R, and 722 or 724

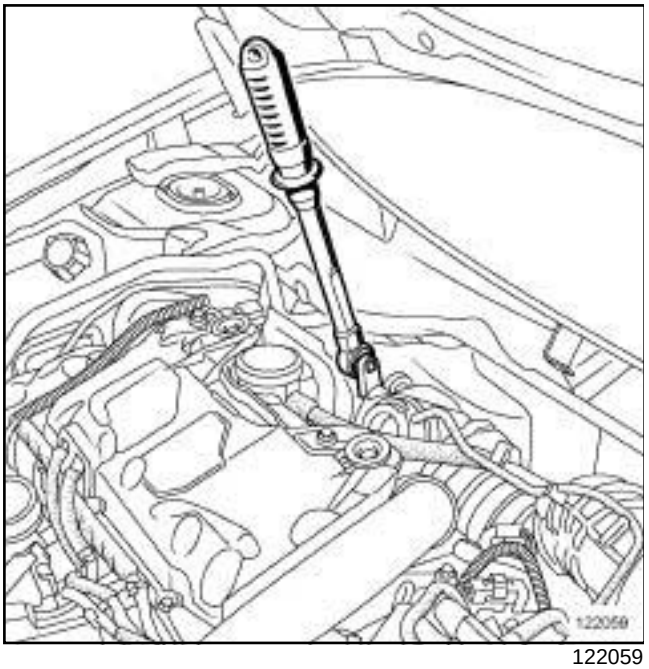

122059

- ❑ Torque tighten the **exhaust gas temperature sensor (40 Nm)**.
- ❑ Clip:
  - the exhaust gas temperature sensor wiring harness,
  - the exhaust gas temperature sensor connector on its mounting.
- ❑ Connect the exhaust gas temperature sensor connector.

II - FINAL OPERATION.

- ❑ Refit:
  - the acoustic protection,
  - the acoustic protection clips on the scuttle panel partition,
  - the scuttle panel grille (see **Scuttle panel grille: Removal - Refitting**) (MR 365, 56A, Exterior equipment),
  - the front wiper arms (see **Windscreen wiper arm: Removal - Refitting**) (MR 364, 85A, Wiping - Washing),
  - the engine cover.

Exhaust gas temperature sensor: Removal - Refitting

K9K, and 734

Essential special tooling	
Mot. 1807	Spanner for tightening exhaust gas temperature sensor

Essential equipment
roller-type stud removal tool

Tightening torques ▽	
exhaust gas temperature sensor nut	**32 Nm**

Note:

Before carrying out work on the exhaust gas temperature sensor (see **19B**, **Exhaust**, **Exhaust: Precautions for repair**, page **19B-1**) .

REMOVAL

I - REMOVAL PREPARATION OPERATION

❑ Position the vehicle on a two-post lift (see **Vehicle: Towing and lifting**) (MR 364, 02A, Lifting equipment).

❑ Disconnect the battery (see **Battery: Removal - Refitting**) (MR 364, 80A, Battery).

❑ Remove the front engine cover.

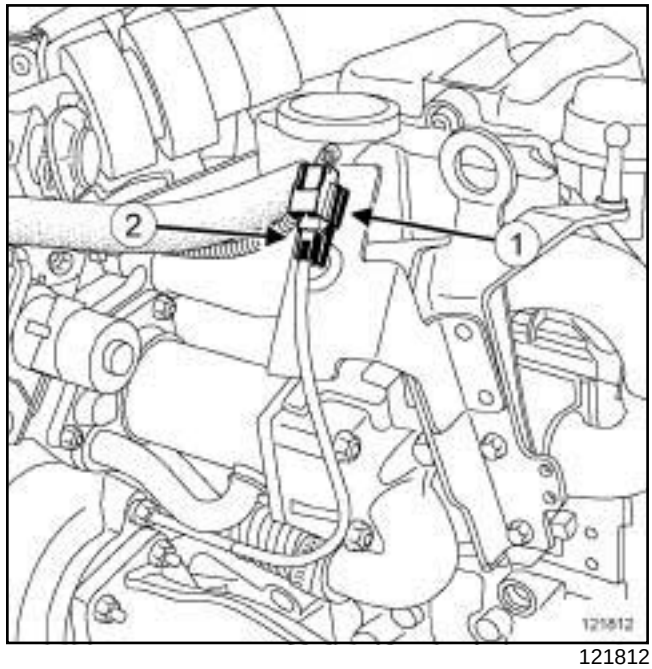

121812

❑ Disconnect the exhaust gas temperature sensor connector (**1**) .

❑ Detach the exhaust gas temperature sensor connector from the lifting eye on the timing end at (**2**) .

❑ Remove:

- the rear suspended engine mounting (see **19D**, **Engine mounting**, **Lower engine tie-bar: Removal - Refitting**, page **19D-36**) ,
- the catalytic pre-converter (see **19B**, **Exhaust**, **Catalytic pre-converter: Removal - Refitting**, page **19B-29**) .

❑ Remove the turbocharger studs with a **roller-type stud removal tool** to facilitate access to the exhaust gas temperature sensor.

K9K, and 734

II - OPERATION FOR REMOVAL OF PART CONCERNED

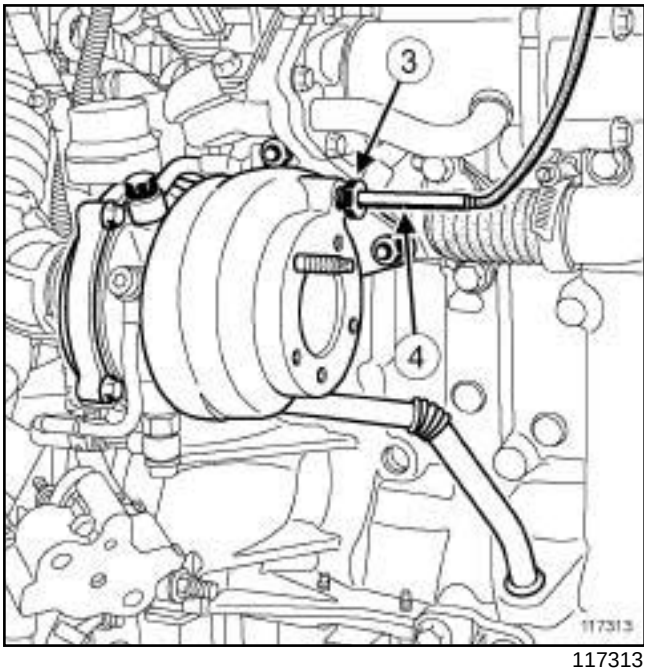

117313

❑ Remove:

- the nut (**3**) from the exhaust gas temperature sensor with the **(Mot. 1807)**,
- the exhaust gas temperature sensor (**4**) .

REFITTING

I - REFITTING PREPARATIONS OPERATION

❑ Clean the exhaust gas temperature sensor using a clean, dry, lint-free cloth if it is being reused.

❑ Always replace the turbocharger studs if the turbocharger is being reused.

II - REFITTING OPERATION FOR PART CONCERNED

❑ Remove the turbocharger studs with a **roller-type stud removal tool** if the turbocharger is being reused.

> Note:
>
> Make sure that the grease does not run over the threading.

❑ Coat the exhaust gas temperature sensor nut threading with **COPPER ANTI-SEIZE GREASE** or **COPPER ALUMINIUM LUBRICANT** (see **Vehicle: Parts and ingredients for the repairwork**) (MR 364, 04B, Consumables - Products).

❑ Fit the exhaust gas temperature sensor into its housing on the turbocharger.

❑ Fit the exhaust gas temperature sensor nut without tightening it.

❑ Torque tighten the **exhaust gas temperature sensor nut (32 Nm)** using the **(Mot. 1807)**.

III - FINAL OPERATION.

❑ Refit the turbocharger studs using a **roller-type stud removal tool**.

❑ Refit:

- the catalytic pre-converter (see **19B**, **Exhaust**, **Catalytic pre-converter: Removal - Refitting**, page **19B-29**) ,
- the rear suspended engine mounting (see **19D**, **Engine mounting**, **Lower engine tie-bar: Removal - Refitting**, page **19D-36**) .

❑ CLip the exhaust gas temperature sensor connector onto the lifting eye on the timing end.

❑ Connect the exhaust gas temperature sensor connector.

❑ Refit the engine cover.

❑ Connect the battery (see **Battery : Removal - Refitting**) (MR 364, 80A, Battery).

B84 or C84 or E84 or K84, and M9R, and 722 or 724

REMOVAL

REMOVAL PREPARATION OPERATION

❑ Remove:

- the engine cover,
- the front wiper arms (see **Windscreen wiper arm: Removal - Refitting**) (MR 364, 85A, Wiping - Washing),
- the scuttle panel grille (see **Scuttle panel grille: Removal - Refitting**) (MR 365, 56A, Exterior equipment),
- the acoustic protection clips on the scuttle panel partition,
- the acoustic protection.

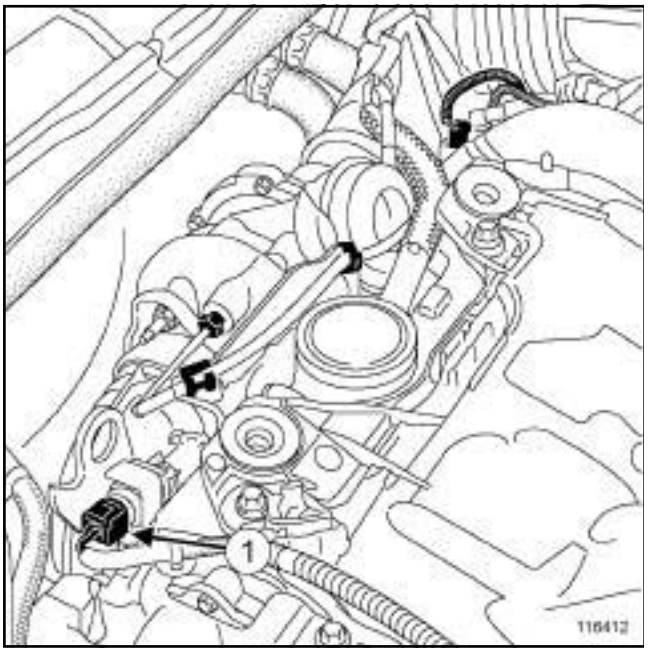

116412

❑ Disconnect the exhaust gas pressure sensor connector (**1**) .

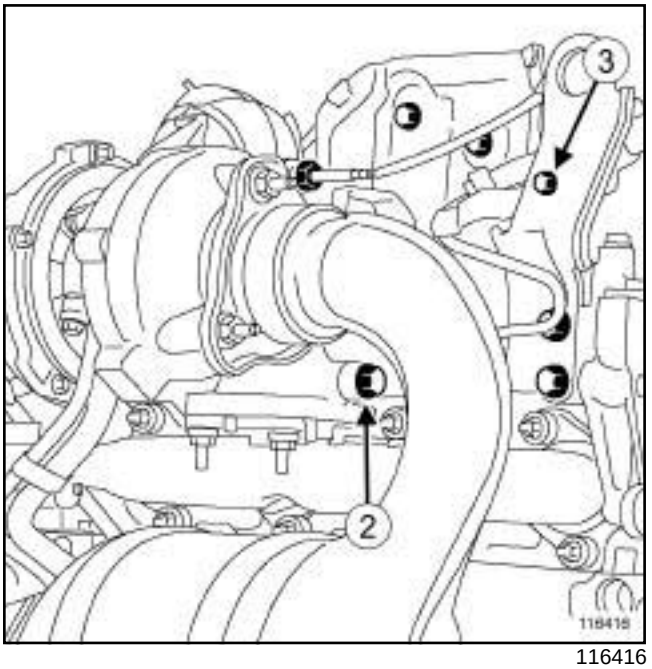

116416

❑ Remove:

- the exhaust gas pressure sensor pipe hollow bolt (**2**) on the turbocharger,
- the bolt (**3**) from the exhaust gas pressure sensor pipe on the lifting eye,
- the exhaust gas pressure sensor with its pipe.

B84 or C84 or E84 or K84, and M9R, and 722 or 724

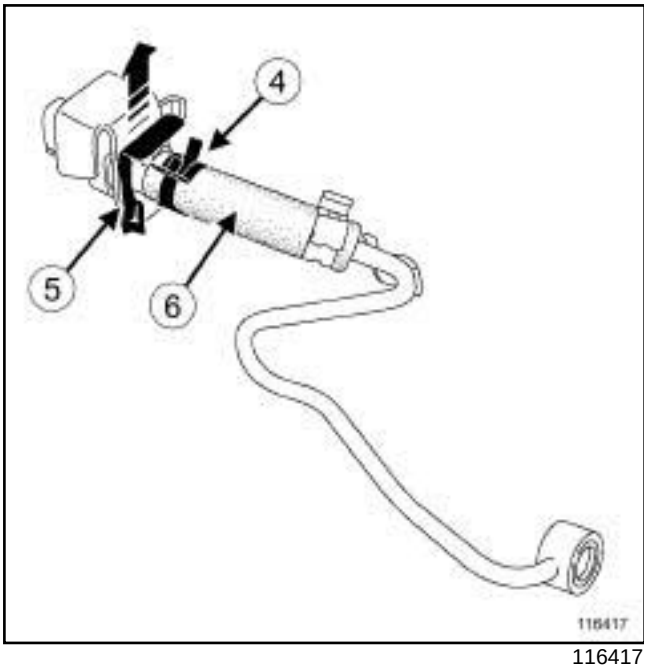

116417

- ❑ Remove the exhaust gas pressure sensor pipe clip (**4**) .
- ❑ Remove the exhaust gas pressure sensor clip (**5**) .
- ❑ Disconnect the exhaust gas pressure sensor pipe (**6**) .
- ❑ Remove the exhaust gas pressure sensor from its mounting.

REFITTING

REFITTING OPERATION FOR PART CONCERNED

- ❑ Refit the exhaust gas pressure sensor to its mounting.
- ❑ Connect the exhaust gas pressure sensor pipe.
- ❑ Refit the exhaust gas pressure sensor clip.
- ❑ Fit the exhaust gas pressure sensor pipe clip.
- ❑ Refit:
  - the exhaust gas pressure sensor with its pipe,
  - the exhaust gas pressure sensor pipe bolt on the lifting eye,
  - the exhaust gas pressure sensor pipe hollow bolt on the turbocharger.
- ❑ Connect the exhaust gas pressure sensor connector.
- ❑ Refit:
  - the acoustic protection,
  - the acoustic protection clips on the scuttle panel partition,
  - the scuttle panel grille (see **Scuttle panel grille: Removal - Refitting**) (MR 365, 56A, Exterior equipment),
  - the front wiper arms (see **Windscreen wiper arm: Removal - Refitting**) (MR 364, 85A, Wiping - Washing),
  - the engine cover.

Particle filter pressure sensor: Removal - Refitting

B84 or C84 or G84 or S84, and F9Q, and 803 or 804

Essential equipment
diagnostic tool

Tightening torques ▽	
adapter	**44 Nm**
upstream pressure measurement connection on its union screwed to the exhaust pipe	**21 Nm**

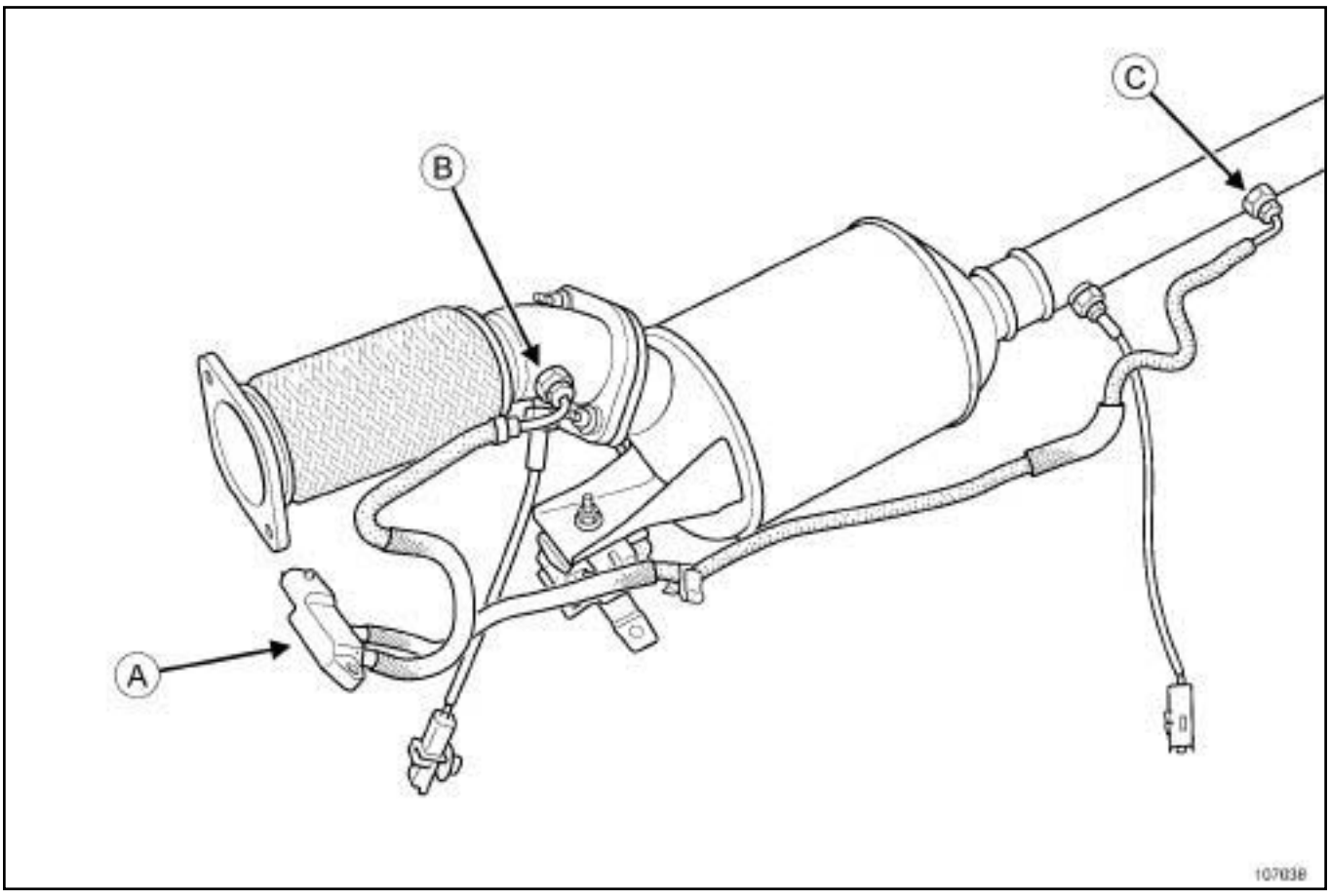

107038

- ❑ (**A**) Particle filter pressure sensor.
- ❑ (**B**) Upstream pressure measurement connection end piece.
- ❑ (**C**) Downstream pressure measurement connection end piece.

REMOVAL

- ❑ Remove the particle filter (see **19B**, **Exhaust**, **Particle filter: Removal - Refitting**, page **19B-85**) .

B84 or C84 or G84 or S84, and F9Q, and 803 or 804

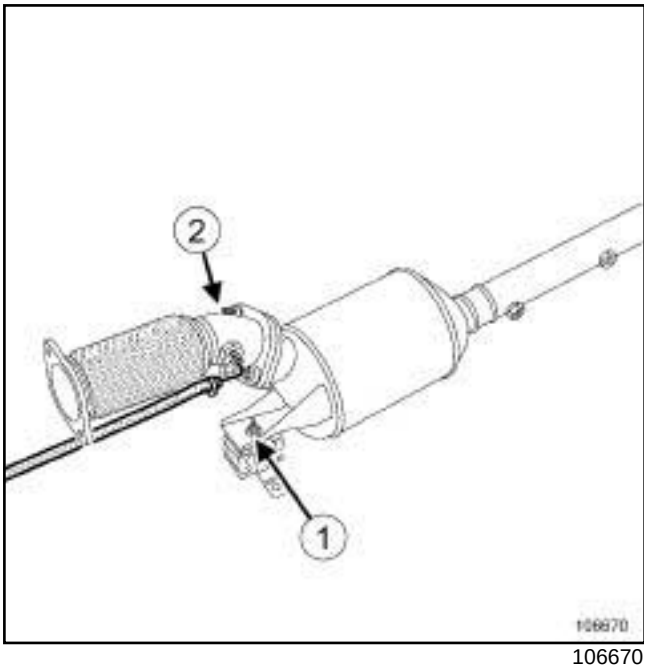

106670

❑ Remove the upstream pressure measurement connection (**1**) from its intermediate adapter (**2**) bolted to the exhaust pipe.

WARNING
When removing the pressure measurement connection (**1**) from its adapter, it is essential to hold the adapter (**2**) with a lock wrench.

WARNING
The pressure measurement circuit must only ever be opened at the adapters on the exhaust pipe.

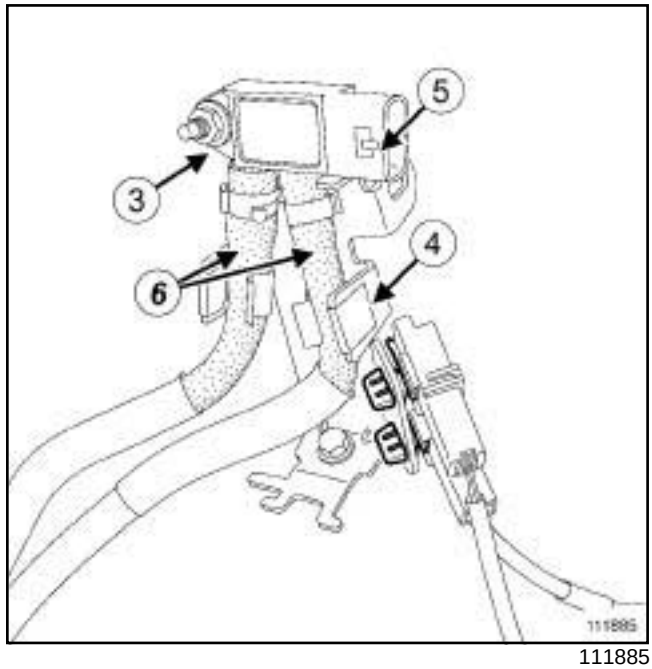

111885

❑ Remove:

- the mounting nut (**3**) from the particle filter pressure sensor mounting (**4**) ,
- the particle filter pressure sensor:

WARNING
Never separate the pressure measurement connections (**5**) from the particle filter pressure sensor (**6**) replace the « sensor - pipe - end piece» assembly if necessary, supplied assembled by the Parts Department (see **19B**, **Exhaust**, **Particle filter: Function**, page **19B-84**) .

B84 or C84 or G84 or S84, and F9Q, and 803 or 804

REFITTING

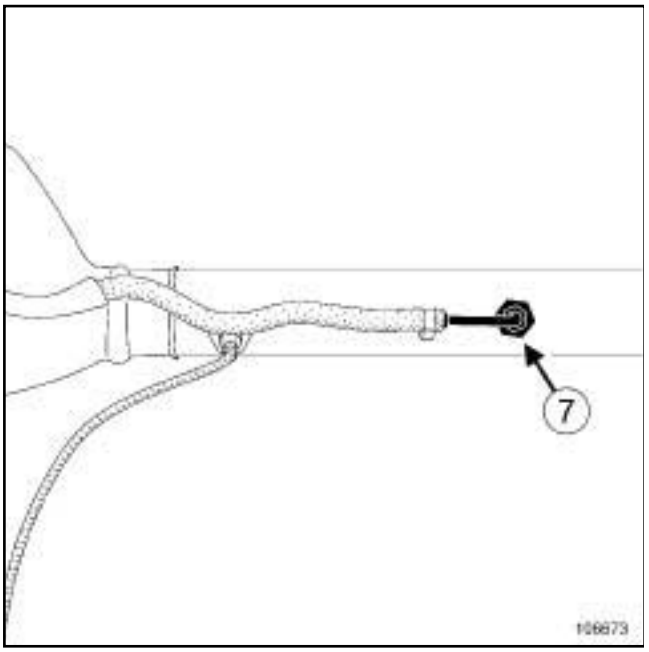

106673

❑

WARNING

Any exhaust pipe adapter (**7**) that has been loosened must be replaced.

❑ If the adapter has been replaced, torque tighten the **adapter (44 Nm)**.

❑ Coat the threading of the upstream pressure measurement connection with **ANTI-SEIZE** high temperature grease or **COPPER-ALUMINIUM LUBRICANT**.

WARNING

Make sure that the grease does not run over the threading.

B84 or C84 or G84 or S84, and F9Q, and 803 or 804

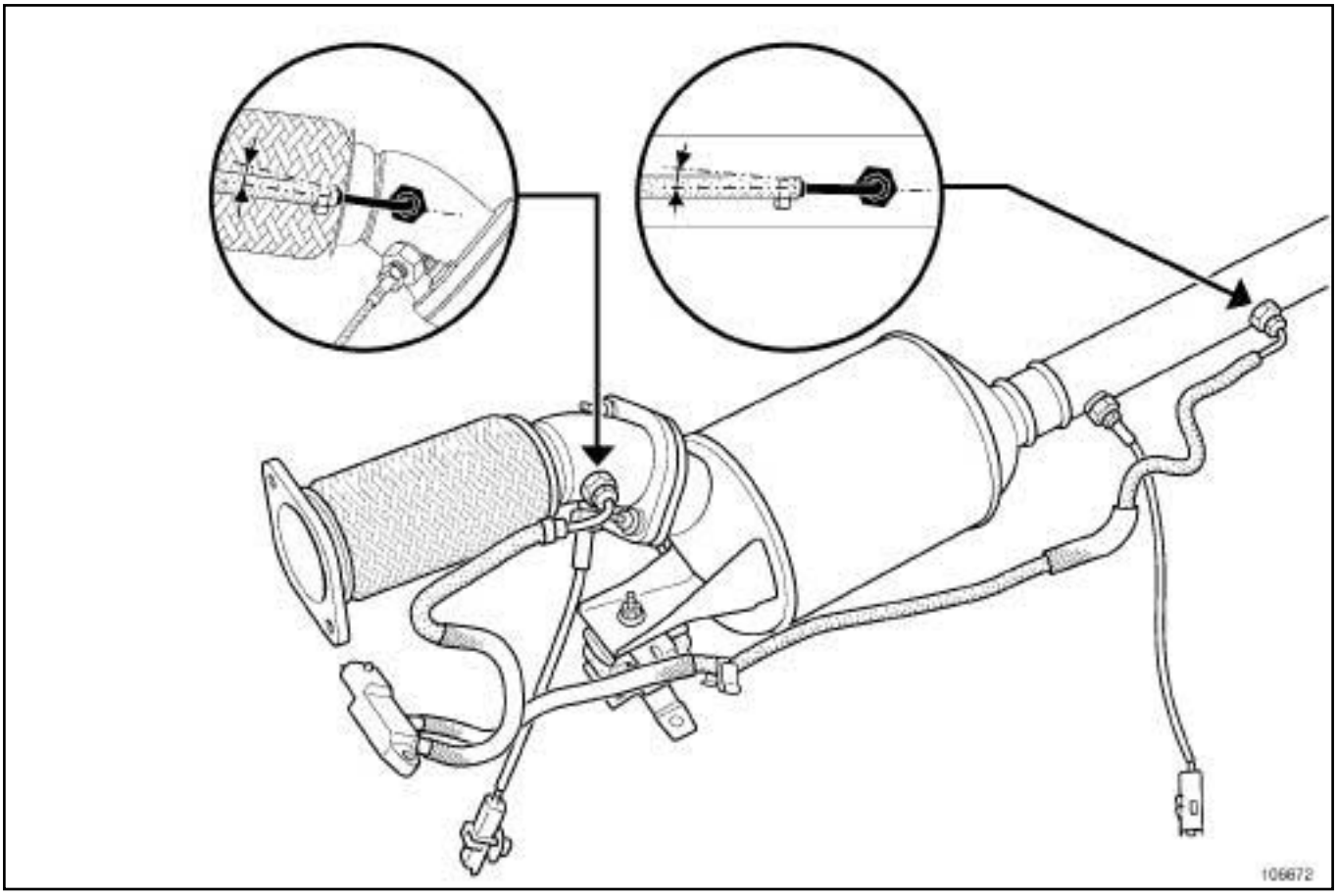

106672

- Fit the rigid part of the upstream pressure measurement tapping then position it so that it is parallel (± **3°**) to the exhaust pipe longitudinal axis.
- Torque tighten the **upstream pressure measurement connection on its union screwed to the exhaust pipe (21 Nm)**.
- Refit the particle filter (see **19B**, **Exhaust**, **Particle filter: Removal - Refitting**, page **19B-85**) .

WARNING

Make sure, after tightening the pressure measurement connections, that this pressure measurement line assembly has no low points (siphon) susceptible to water accumulation.

To do this:

- check that the rigid sections of the pressure connections are correctly positioned in relation to the exhaust pipe longitudinal axis,
- manipulate the pressure measurement connection retaining clips on the heat shield (turn the connection in the clip so as to avoid low points).

- Before restarting the engine, use the **diagnostic tool** to clear any faults stored by the injection computer.

Particle filter pressure sensor: Removal - Refitting

M9R, and 724

Essential equipment
diagnostic tool

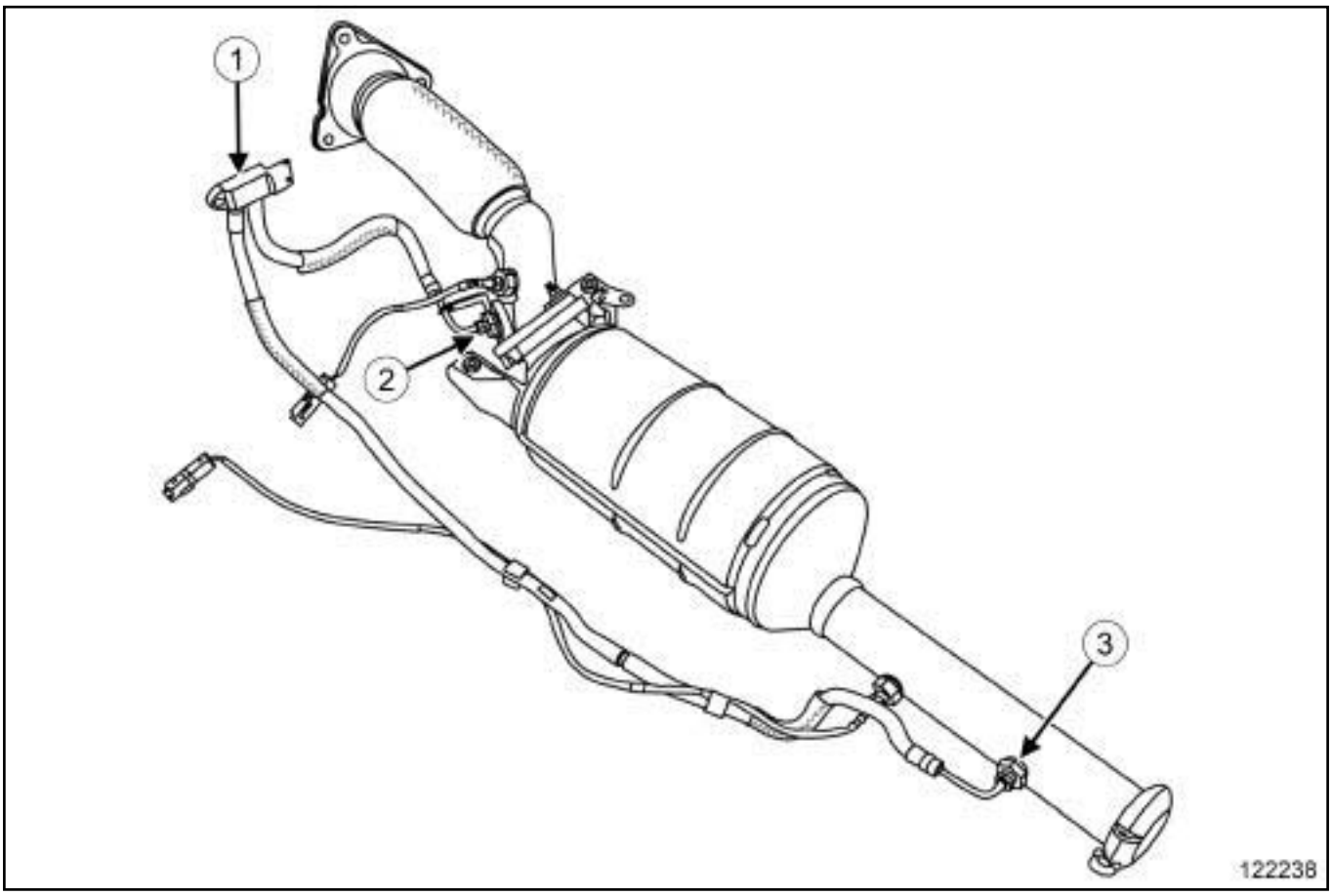

122238

(**1**) Particle filter pressure sensor

(**2**) Upstream pressure measurement connection end piece

(**3**) Downstream pressure measurement connection end piece

WARNING

The pressure measurement circuit must never be opened except at the adapters on the exhaust pipe.

WARNING

Never separate the pressure measurement pipes from the particle filter pressure sensor.

Replace the « sensor - pipes - end piece » assembly, if necessary, supplied as a unit by the Parts Department.

REMOVAL

I - REMOVAL PREPARATION OPERATION

❑ Position the vehicle on a two-post lift (see **Vehicle: Towing and lifting**) (MR 364, 02A, Lifting equipment).

❑ Disconnect the battery (see **Battery: Removal - Refitting**) (MR 364, 80A, Battery).

❑ Remove:

- the engine undertray bolts,
- the engine undertray.

M9R, and 724

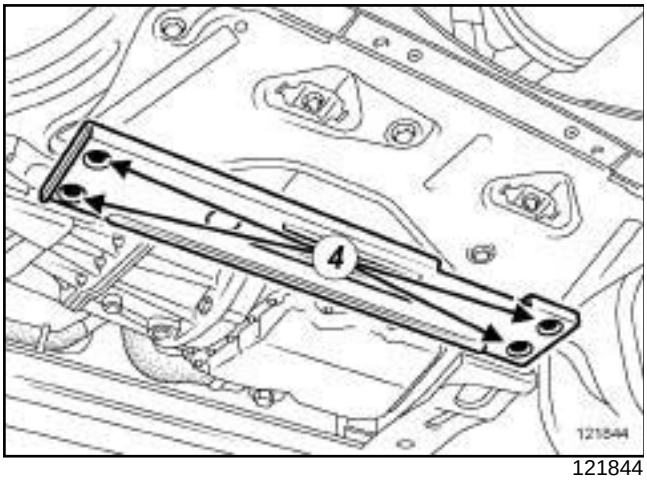

121844

❑ Remove:

- the reinforcement lower cross member nuts (**4**) ,
- the reinforcement lower cross member.

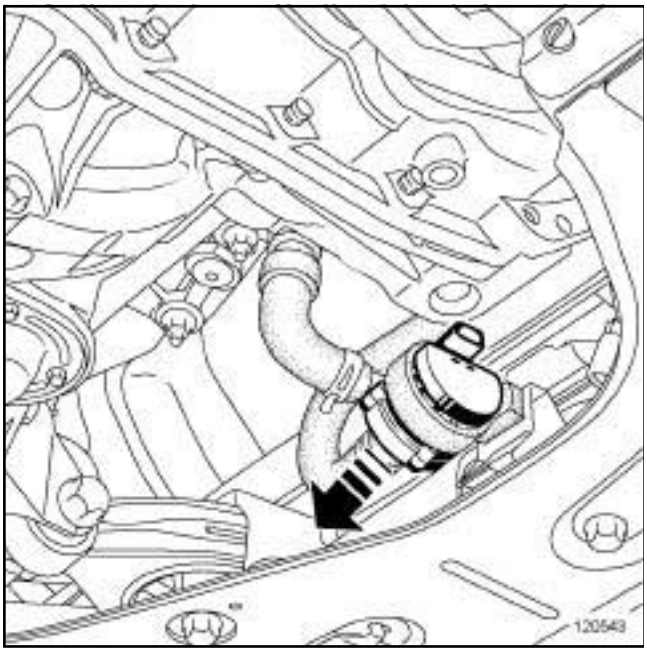

120543

❑ Remove the electric coolant pump from its mounting.

❑ Remove the particle filter (see **19B**, **Exhaust**, **Particle filter: Removal - Refitting**, page **19B-85**) .

II - OPERATION FOR REMOVAL OF PART CONCERNED

1 - Upstream particle filter pressure sensor

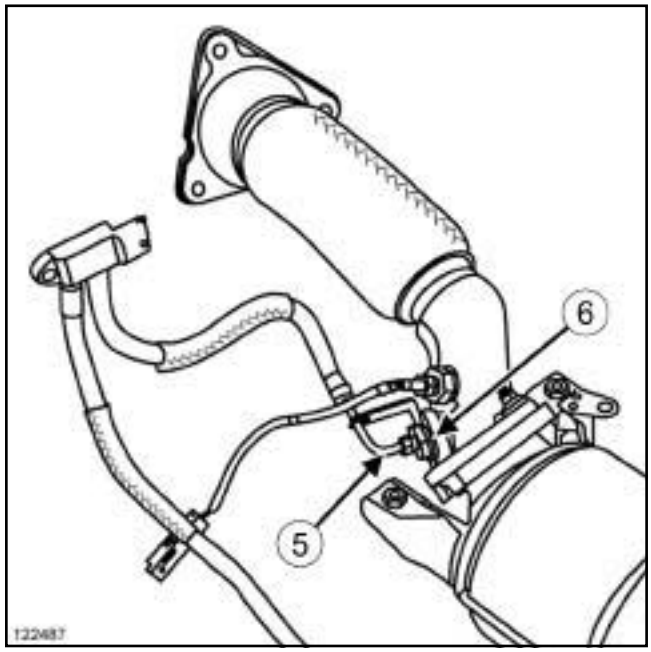

122487

❑ Remove the upstream pressure measurement connection (**5**) from its intermediate adapter bolted to the exhaust pipe (**6**) .

WARNING

When the pressure measurement tapping is removed from its adapter, the adapter (**6**) must be held with a lock wrench.

M9R, and 724

2 - Downstream particle filter pressure sensor

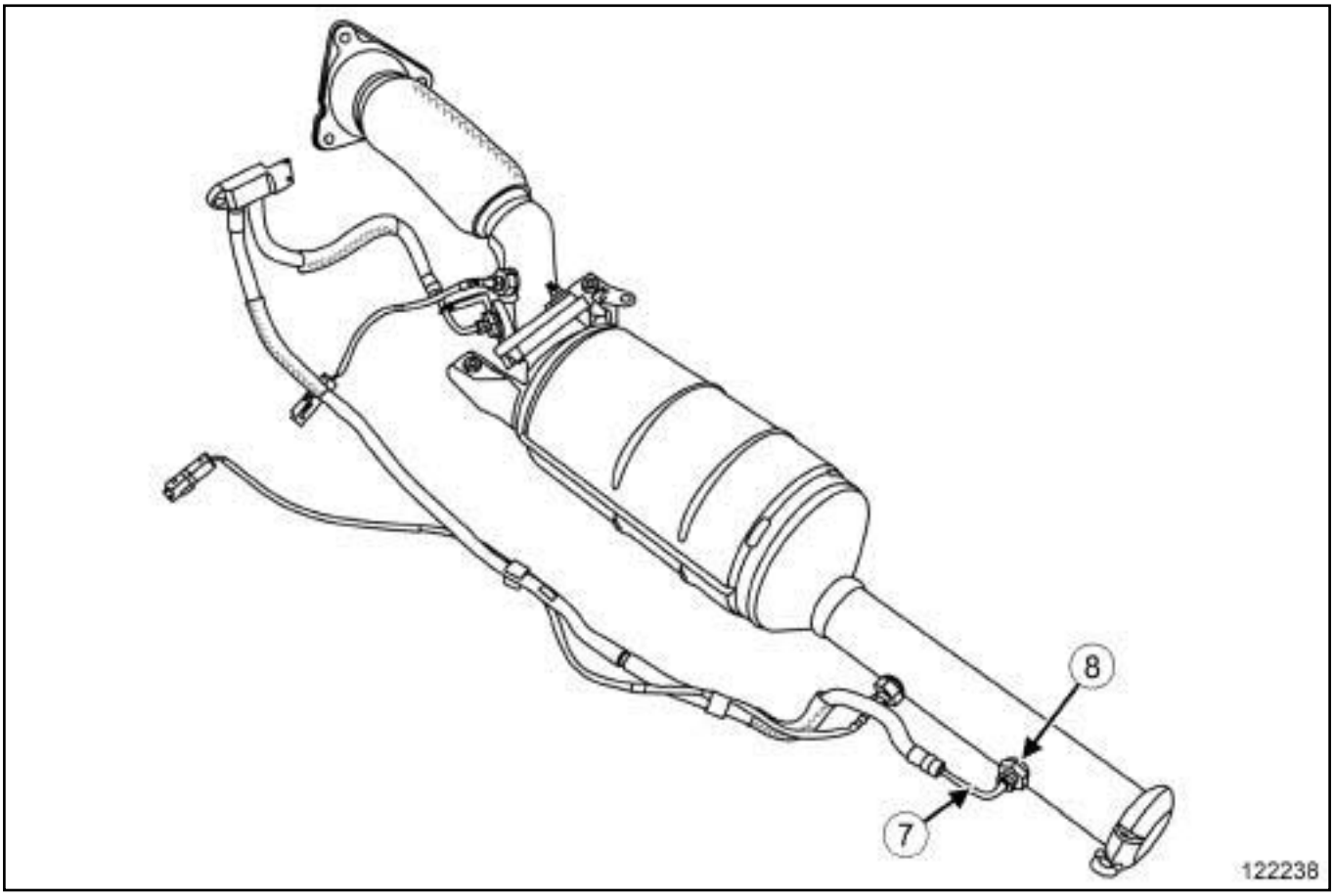

122238

❑ Remove the downstream pressure measurement connection (**7**) from its intermediate adapter bolted to the exhaust pipe (**8**) .

> **WARNING**
> When the pressure measurement tapping is removed from its adapter, the adapter (**8**) must be held with a lock wrench.

REFITTING

I - REFITTING PREPARATIONS OPERATION

❑ Coat the upstream pressure measurement connection threadings with high temperature **ANTI-SEIZE** (see **Vehicle: Parts and ingredients for the repairwork**) grease (MR 364, 04B, Consumables - Products).

❑ Make sure that the grease does not run over the threading.

> **WARNING**
> To ensure that the exhaust pipe is correctly sealed, replace any loose adapters on the exhaust pipe.

II - REFITTING OPERATION FOR PART CONCERNED

1 - Downstream particle filter pressure sensor

❑ Fit the rigid section of the downstream pressure measurement connection then position it so that it is parallel (**+3°**) to the longitudinal axis of the exhaust pipe.

❑ Only tighten the adapter bolted to the exhaust pipe if it has been replaced.

❑ Refit the downstream pressure measurement connection to its adapter bolted to the exhaust pipe.

M9R, and 724

2 - Upstream particle filter pressure sensor

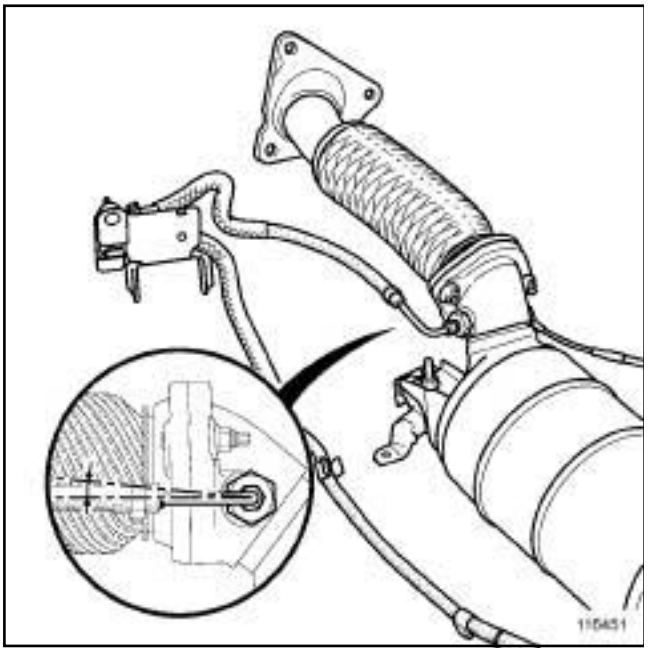

116451

- ❑ Fit the rigid part of the upstream pressure tapping then position it so that it is parallel (**+3°**) with the exhaust pipe longitudinal axis.
- ❑ Only tighten the adapter bolted to the exhaust pipe if it has been replaced.
- ❑ Refit the upstream pressure measurement connection to its adapter bolted to the exhaust pipe.

III - FINAL OPERATION.

- ❑ Refit the particle filter (see **19B**, **Exhaust**, **Particle filter: Removal - Refitting**, page **19B-85**) .
- ❑ Fit the electric coolant pump to its mounting.
- ❑ Refit:
  - the reinforcement lower cross member,
  - the reinforcement lower cross member nuts,
  - the engine undertray,
  - the engine undertray bolts.
- ❑ Connect the battery (see **Battery: Removal - Refitting**) (MR 364, 80A, Battery).
- ❑ Before restarting the engine, use the **diagnostic tool** to clear any faults stored by the injection computer.

Particle filter pressure sensor: Removal - Refitting

K9K, and 734

Essential equipment
diagnostic tool

WARNING
The pressure measurement circuit must never be opened except at the adapters on the exhaust pipe.

Note:

Before carrying out any work on the particle filter pressure sensor (see **19B**, **Exhaust**, **Exhaust: Precautions for repair**, page **19B-1**) .

REMOVAL

I - REMOVAL PREPARATION OPERATION

❑ Position the vehicle on a two-post lift (see **Vehicle: Towing and lifting**) (MR 364, 02A, Lifting equipment).

❑ Disconnect the battery (see **Battery: Removal - Refitting**) (MR 364, 80A, Battery).

❑ Remove:

- the engine undertray bolts,
- the engine undertray,
- the particle filter (see **19B**, **Exhaust**, **Particle filter: Removal - Refitting**, page **19B-85**) .

II - OPERATION FOR REMOVAL OF PART CONCERNED

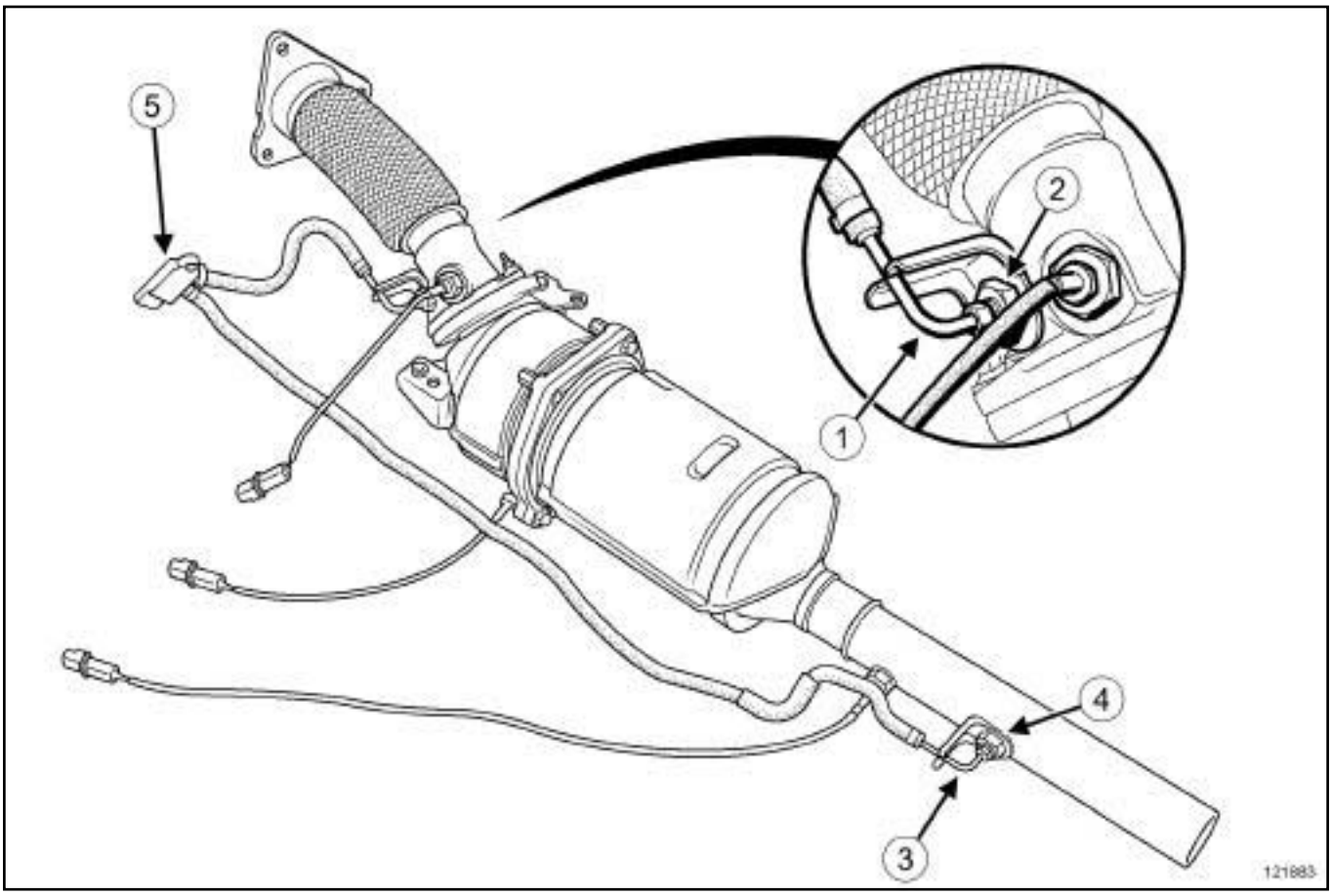

121883

❑

WARNING
When the pressure measurement connection is removed from its adapter, the adapter (**2**) and (**4**) must be held with a lock wrench.

❑ Remove:

- the upstream pressure measurement pipe (**1**) from its adapter (**2**) bolted to the exhaust pipe,
- the downstream pressure measurement pipe (**3**) from its adapter (**4**) bolted to the exhaust pipe,

K9K, and 734

- the pressure sensor (**5**) fitted with its upstream and downstream pressure measurement pipes.

REFITTING

I - REFITTING PREPARATIONS OPERATION

❏

> **WARNING**
> Always replace any adapter that has been removed from the exhaust pipe.

❏ If the adapter(s) is replaced, do no refit the pressure measurement pipe indexing bracket(s).

> Note:
>
> Make sure that the grease does not run over the threading.

❏ Coat the temperature sensor threading with **COPPER ANTI-SEIZE GREASE** or **COPPER ALUMINIUM LUBRICANT** (see **Vehicle: Parts and ingredients for the repairwork**) (MR 364, 04B, Consumables - Products).

II - REFITTING OPERATION FOR PART CONCERNED

1 - If the adapter(s) is replaced

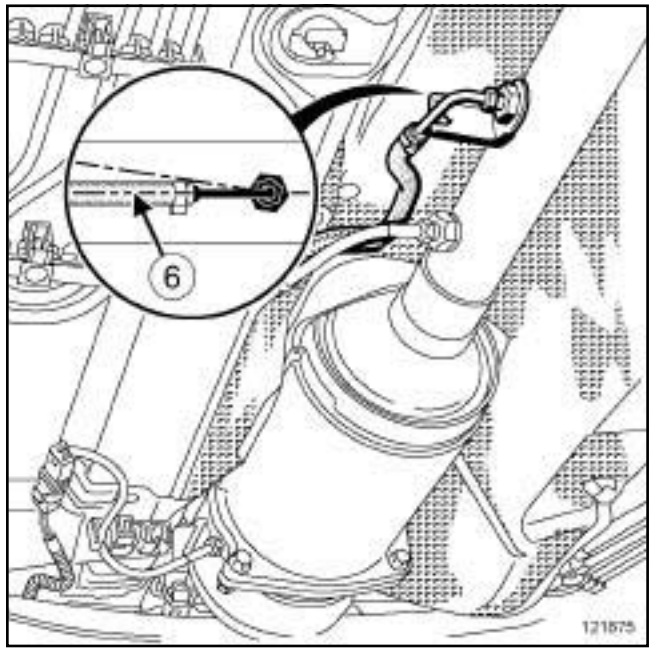

121875

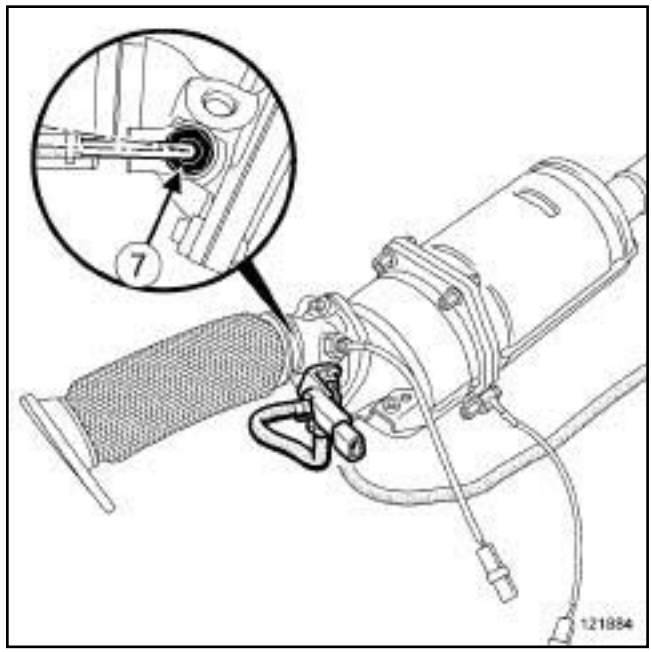

121884

❏ Refit:

- the downstream pressure measurement pipe to its adapter bolted onto the exhaust pipe, observing an angle (**6**) of **+3°** for the rigid section in relation to the exhaust pipe,

K9K, and 734

- the upstream pressure measurement pipe to its adapter bolted onto the exhaust pipe, observing an angle (**7**) of **+3°** for the rigid section in relation to the exhaust pipe.

2 - If the adapter(s) is not replaced

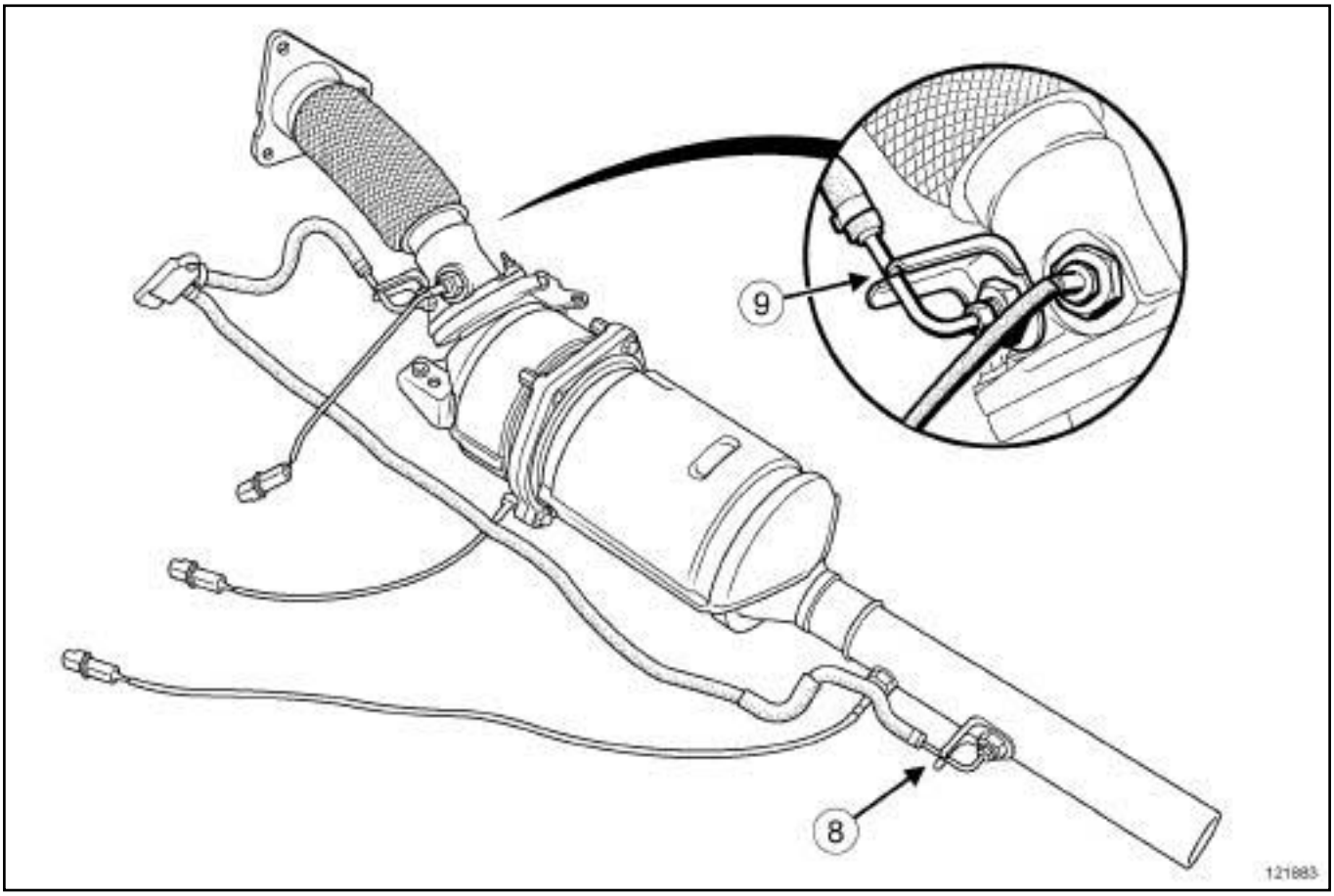

121883

❑ Refit:

- the downstream pressure measurement pipe to its adapter bolted onto the exhaust pipe by placing it in the indexing bracket groove (**8**) ,
- the upstream pressure measurement pipe to its adapter bolted to the exhaust pipe by placing it in the indexing bracket groove (**9**) .

III - FINAL OPERATION.

❑ Refit:

- the particle filter (see **19B**, **Exhaust**, **Particle filter: Removal - Refitting**, page **19B-85**) ,
- the engine undertray,
- the engine undertray bolts.

❑ Connect the battery (see **Battery : Removal - Refitting**) (MR 364, 80A, Battery).

❑ Before starting the engine, use the **diagnostic tool** to clear any faults stored by the injection computer.

❑ If replacing the particle filter, reinitialise the particle filter parameters (see **Fault finding - Replacement of components**) (MR 366, 13B, Diesel injection).

Particle filter temperature sensors: Removal - Refitting

B84 or C84 or G84 or S84, and F9Q, and 803 or 804

Essential equipment
diagnostic tool

Tightening torques ▽	
adapter	**44 Nm**
downstream particle filter temperature sensor	**30 Nm**

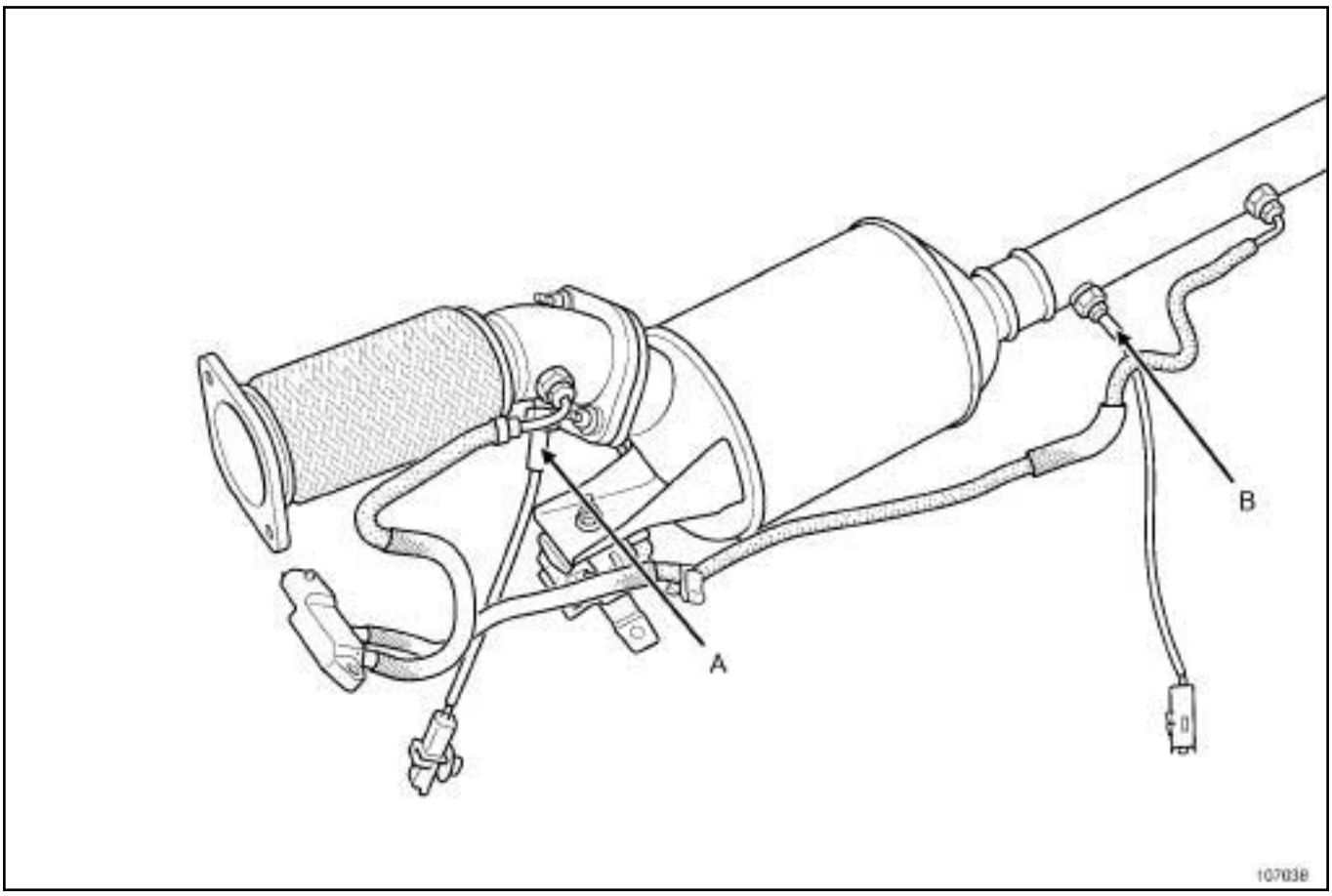

107038

❑ (**A**) Upstream particle filter temperature sensor

(**B**) Downstream particle filter temperature sensor

I - (A) UPSTREAM PARTICLE FILTER TEMPERATURE SENSOR

1 - Removal

❑ Remove the particle filter (see **19B**, **Exhaust**, **Particle filter: Removal - Refitting**, page **19B-85**) .

B84 or C84 or G84 or S84, and F9Q, and 803 or 804

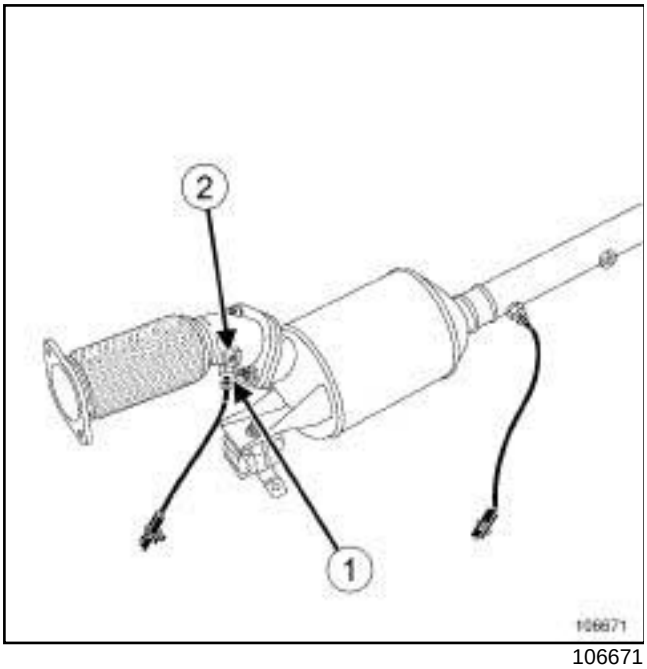

106671

❑ Remove the upstream particle filter temperature sensor (**1**) from its adapter (**2**) screwed onto the exhaust pipe.

> **WARNING**
> When the upstream particle filter temperature sensor (**1**) is removed, the adapter must be held (**2**) with a lock-wrench.

2 - Refitting

❑

> **WARNING**
> Any exhaust pipe adapter ***(2)*** that has been loosened must be replaced.

❑ If the adapter has been replaced, torque tighten the **adapter (44 Nm)**.

❑ Coat the threading of the particle filter upstream temperature sensor with **ANTI-SEIZE** high temperature grease or **COPPER-ALUMINIUM LUBRICANT**.

> **WARNING**
> Make sure that the grease does not run over the threading.

❑ Torque tighten the **upstream particle filter temperature sensor (30 Nm)**.

❑ Check:

- that there is no contact with the wiring harness,
- the condition of the wiring harness.

❑ Replace the wiring harness if necessary.

❑ Refit the particle filter (see **19B**, **Exhaust**, **Particle filter: Removal - Refitting**, page **19B-85**) .

II - (B) DOWNSTREAM PARTICLE FILTER TEMPERATURE SENSOR

1 - Removal

❑ Position the vehicle on a two-post lift.

❑ Disconnect the battery (see **Battery : Removal - Refitting**) (MR 364, 80A, Battery).

❑ Remove the engine undertray.

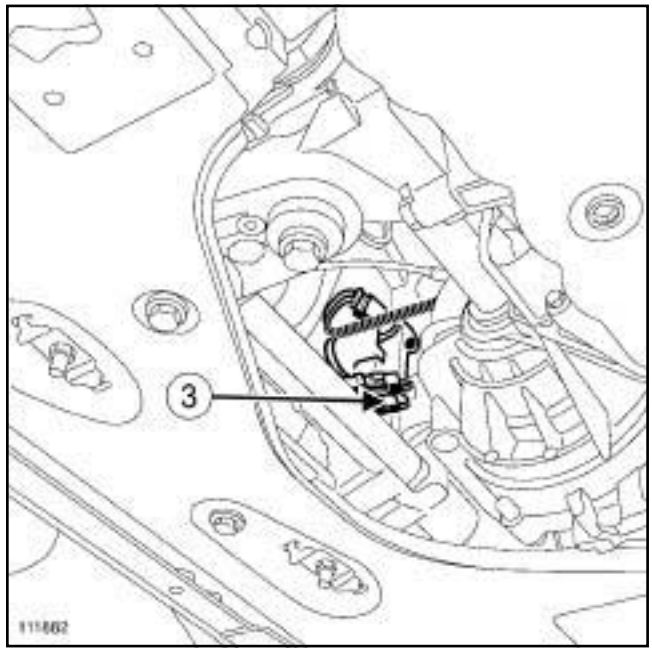

111882

❑ Disconnect the downstream particle filter temperature sensor offset connector (**3**) .

B84 or C84 or G84 or S84, and F9Q, and 803 or 804

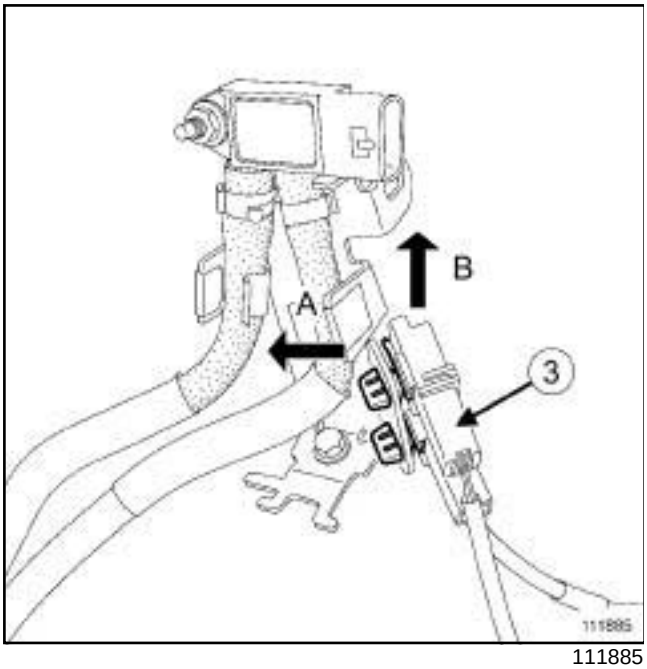

111885

❑ Unpick the downstream particle filter temperature sensor offset connector (**3**) from its mounting.

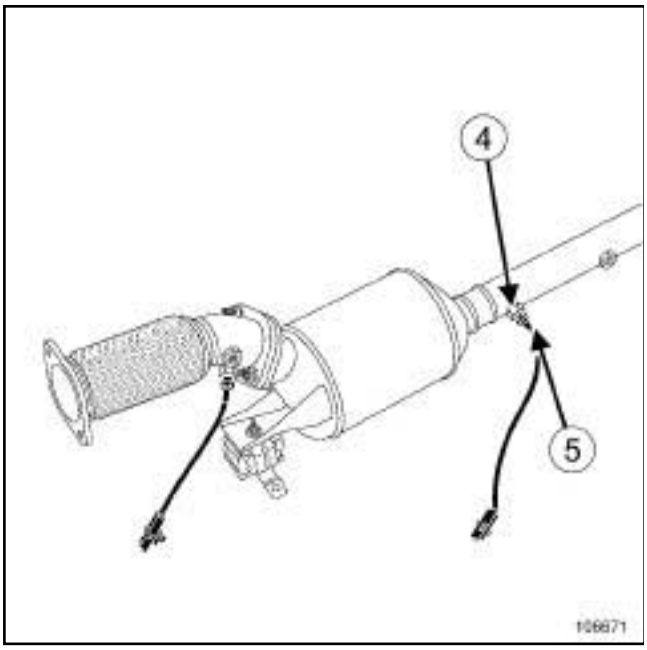

106671

❑ Remove the downstream particle filter temperature sensor (**4**) from its adapter (**5**) screwed into the exhaust pipe.

> **WARNING**
> When removing the downstream particle filter temperature sensor (**4**) , the adapter (**5**) must be held with a lock wrench.

2 - Refitting

❑

> **WARNING**
> Any exhaust pipe adapter ***(3)*** that has been loosened must be replaced.

❑ If the adapter has been replaced, torque tighten the **adapter (44 Nm)**.

❑ Coat the threading of the particle filter downstream temperature sensor with **ANTI-SEIZE** high temperature grease or **COPPER-ALUMINIUM LUBRICANT**.

> **WARNING**
> Make sure that the grease does not run over the threading.

❑ Torque tighten the **downstream particle filter temperature sensor (30 Nm)**

❑ Check:

- that there is no contact with the wiring harness,
- the condition of the wiring harness.

❑ Replace the wiring harness if necessary.

❑ Proceed in the reverse order to removal.

❑ Connect the battery (see **Battery : Removal - Refitting**) (MR 364, 80A, Battery).

❑ Before restarting the engine, use the **diagnostic tool** to clear any faults stored by the injection computer.

K9K, and 734

Essential equipment
diagnostic tool

Note:

Before carrying out any work on the particle filter temperature sensors (see **19B**, **Exhaust**, **Exhaust: Precautions for repair**, page **19B-1**) .

REMOVAL

I - REMOVAL PREPARATION OPERATION

- ❑ Position the vehicle on a two-post lift (see **Vehicle: Towing and lifting**) (MR 364, 02A, Lifting equipment).
- ❑ Disconnect the battery (see **Battery: Removal - Refitting**) (MR 364, 80A, Battery).
- ❑ Remove the engine undertray.

Catalytic converter upstream temperature sensor

- ❑ Remove the particle filter (see **19B**, **Exhaust**, **Particle filter: Removal - Refitting**, page **19B-85**) .

II - OPERATION FOR REMOVAL OF PART CONCERNED

1 - Catalytic converter upstream temperature sensor

- ❑

WARNING
When the pressure measurement connection is removed from its adapter, the adapter must be held with a lock wrench.

- ❑ Remove the catalytic converter upstream temperature sensor from its adapter bolted to the exhaust pipe.

2 - Particle filter upstream temperature sensor

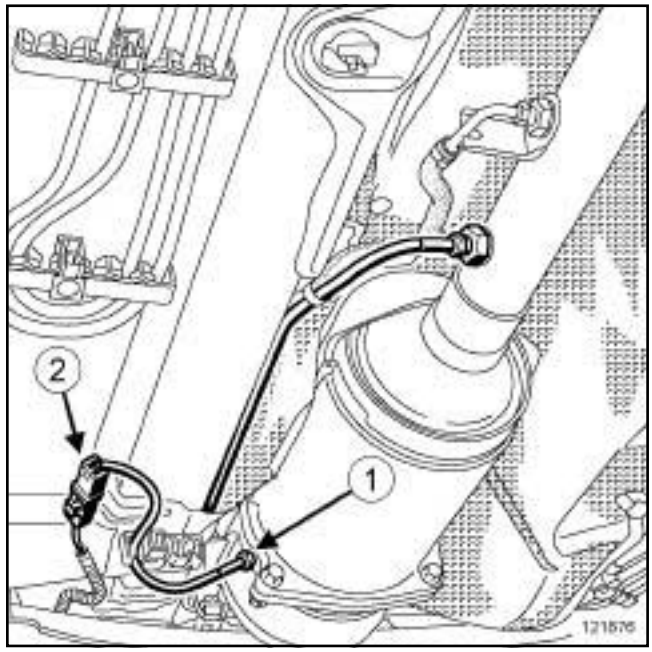

121876

- ❑ Remove the particle filter upstream temperature sensor (**1**) .
- ❑ Detach the particle filter heat shield upstream temperature sensor connector (**2**) .
- ❑ Disconnect the particle filter upstream temperature sensor connector (**2**) .
- ❑ Remove the particle filter upstream temperature sensor.

K9K, and 734

3 - Particle filter downstream temperature sensor

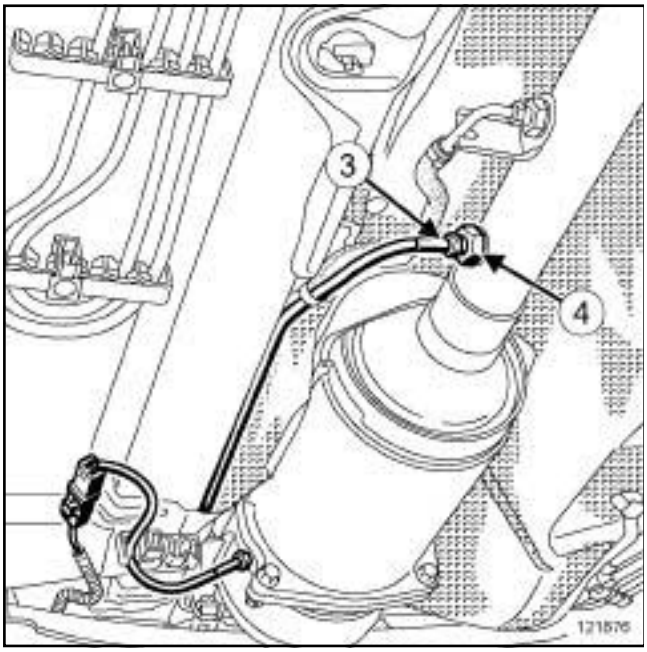

121876

❑

> **WARNING**
> When the pressure measurement tapping is removed from its adapter, the adapter (**4**) must be held with a lock wrench.

❑ Remove the temperature sensor (**3**) downstream of the particle filter from its adapter (**4**) bolted to the exhaust pipe.

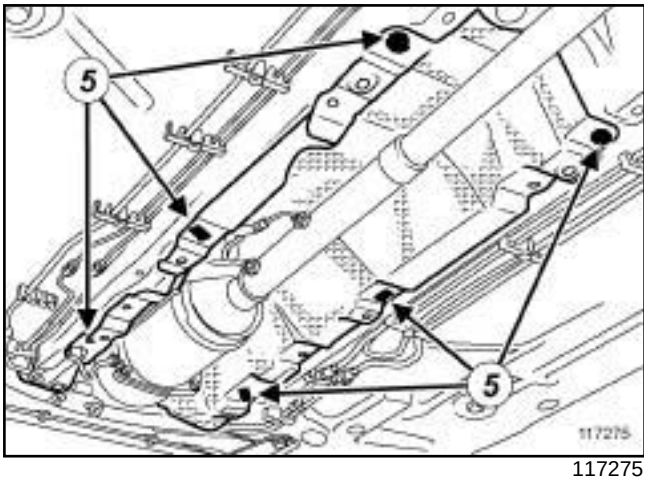

117275

❑ Remove the heat shield clips (**5**)

❑ Remove the heat shield.

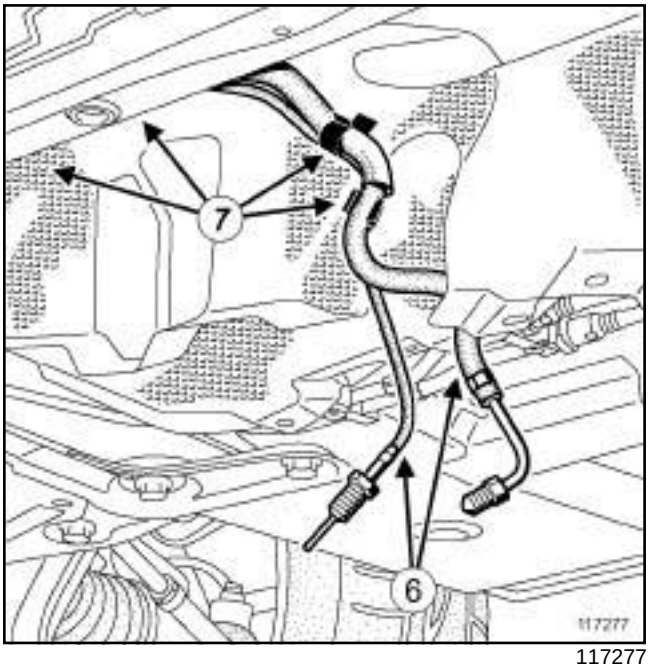

117277

❑ Detach the « particle filter downstream temperature sensor wiring harness - downstream pressure measurement pipe » (**6**) assembly from the heat shield by pressing on the clips (**7**) .

❑ Remove the « particle filter downstream temperature sensor wiring harness - downstream pressure measurement pipe » assembly from the heat shield.

❑ Unpick the particle filter downstream temperature sensor wiring harness from the downstream pressure measurement connection by pressing on the clips (**7**) .

K9K, and 734

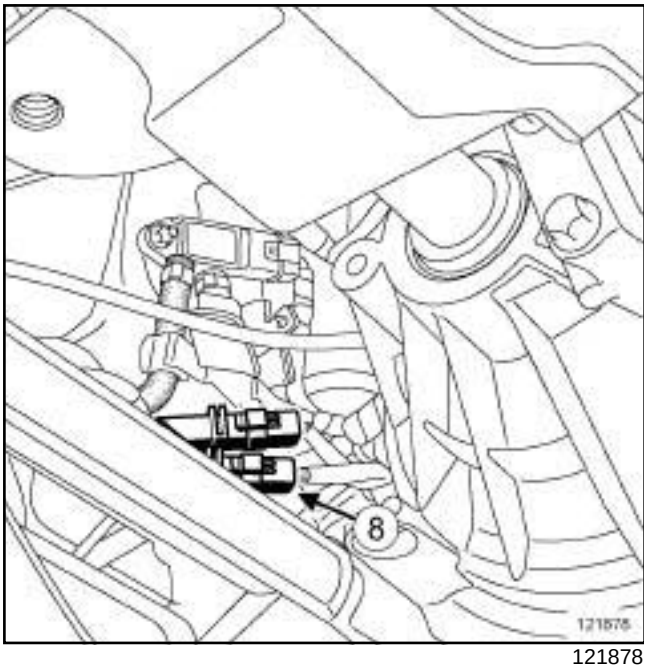

121878

- ❑ Disconnect the particle filter downstream temperature sensor male connector (**8**) .
- ❑ Disconnect the particle filter downstream temperature sensor female connector from the retaining bracket.
- ❑ Remove the particle filter downstream temperature sensor.

REFITTING

I - REFITTING PREPARATIONS OPERATION

❑

> **WARNING**
> Always replace any adapter that has been removed from the exhaust pipe.

> Note:
> Make sure that the grease does not run over the threading.

- ❑ Coat the temperature sensor threading with **COPPER ANTI-SEIZE GREASE** or **COPPER ALUMINIUM LUBRICANT** (see **Vehicle: Parts and ingredients for the repairwork**) (MR 364, 04B, Consumables - Products).

II - REFITTING OPERATION FOR PART CONCERNED

1 - Catalytic converter upstream temperature sensor

- ❑ Refit the catalytic converter upstream temperature sensor on its adapter bolted to the exhaust pipe.

2 - Particle filter upstream temperature sensor

- ❑ Refit the particle filter upstream temperature sensor.
- ❑ Connect the particle filter upstream temperature sensor connector.
- ❑ Attach the particle filter upstream temperature sensor connector to the heat shield.

3 - Particle filter downstream temperature sensor

- ❑ Attach the particle filter downstream temperature sensor female connector to the retaining bracket.
- ❑ Connect the particle filter downstream temperature sensor male connector.
- ❑ Attach the particle filter downstream temperature sensor wiring harness to the downstream pressure measurement pipe.
- ❑ Fit the « particle filter downstream temperature sensor wiring harness - downstream pressure measurement pipe » assembly behind the heat shield.
- ❑ Attach the « particle filter downstream temperature sensor wiring harness - downstream pressure measurement pipe » assembly to the heat shield.
- ❑ Fit the heat shield.
- ❑ Refit the heat shield clips.
- ❑ Refit the particle filter downstream temperature sensor to its adapter bolted to the exhaust pipe.

III - FINAL OPERATION.

1 - Catalytic converter upstream temperature sensor

- ❑ Refit the particle filter (see **19B**, **Exhaust**, **Particle filter: Removal - Refitting**, page **19B-85**) .
- ❑ Refit the engine undertray.
- ❑ Connect the battery (see **Battery : Removal - Refitting**) (MR 364, 80A, Battery).
- ❑ Before starting the engine, use the **diagnostic tool** to clear any faults stored by the injection computer.

K9K, and 734

- If replacing the particle filter, reinitialise the particle filter parameters (see **Fault finding - Replacement of components**) (MR 366, 13B, Diesel injection).

2 - All other sensors

- Refit the engine undertray.
- Connect the battery (see **Battery : Removal - Refitting**) (MR 364, 80A, Battery).
- Before starting the engine, use the **diagnostic tool** to clear any faults stored by the injection computer.

M9R, and 724

Essential equipment
diagnostic tool

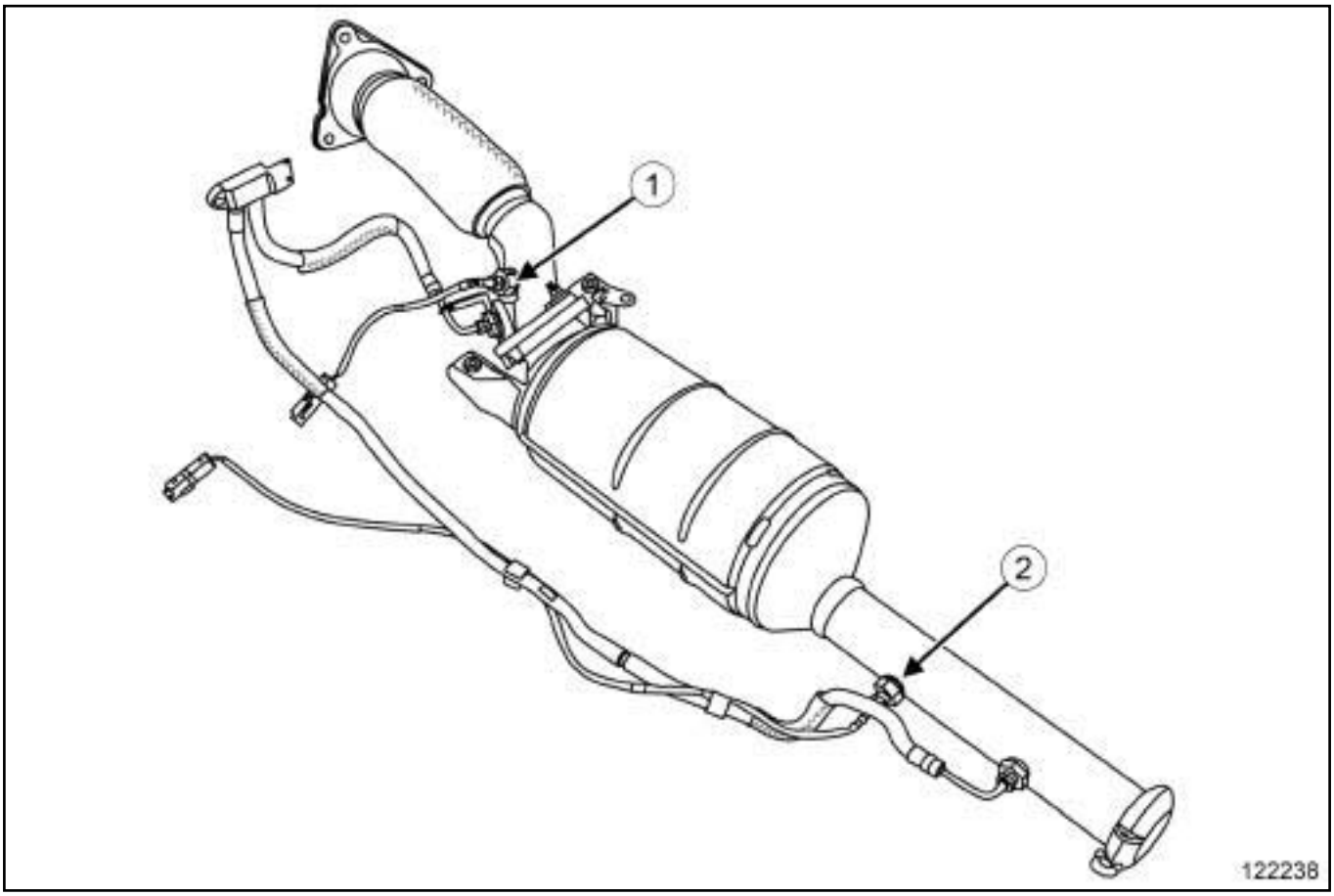

122238

(**1**) Particle filter upstream temperature sensor

(**2**) Particle filter downstream temperature sensor

REMOVAL

I - REMOVAL PREPARATION OPERATION

❑ Position the vehicle on a two-post lift (see **Vehicle: Towing and lifting**) (MR 364, 02A, Lifting equipment).

❑ Disconnect the battery (see **Battery: Removal - Refitting**) (MR 364, 80A, Battery).

❑ Remove:

- the engine undertray bolts,
- the engine undertray.

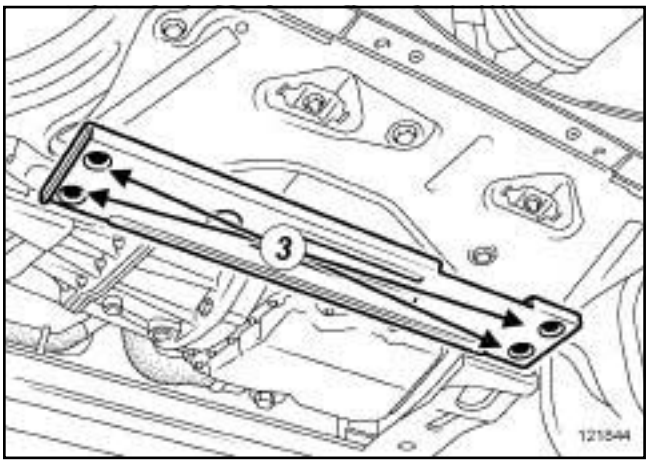

121844

❑ Remove:

- the reinforcement lower cross member nuts (**3**) ,
- the reinforcement lower cross member.

M9R, and 724

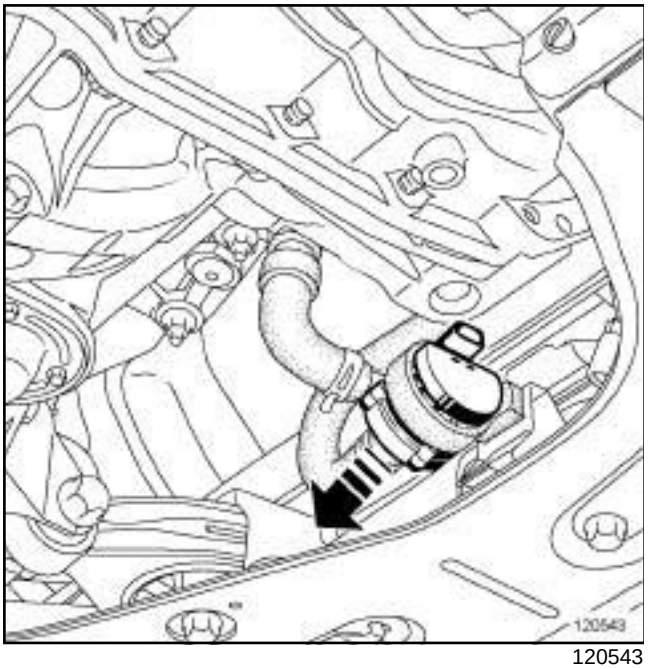

120543

❑ Remove the electric coolant pump from its mounting.

M9R, and 724

II - OPERATION FOR REMOVAL OF PART CONCERNED

1 - Upstream particle filter temperature sensor

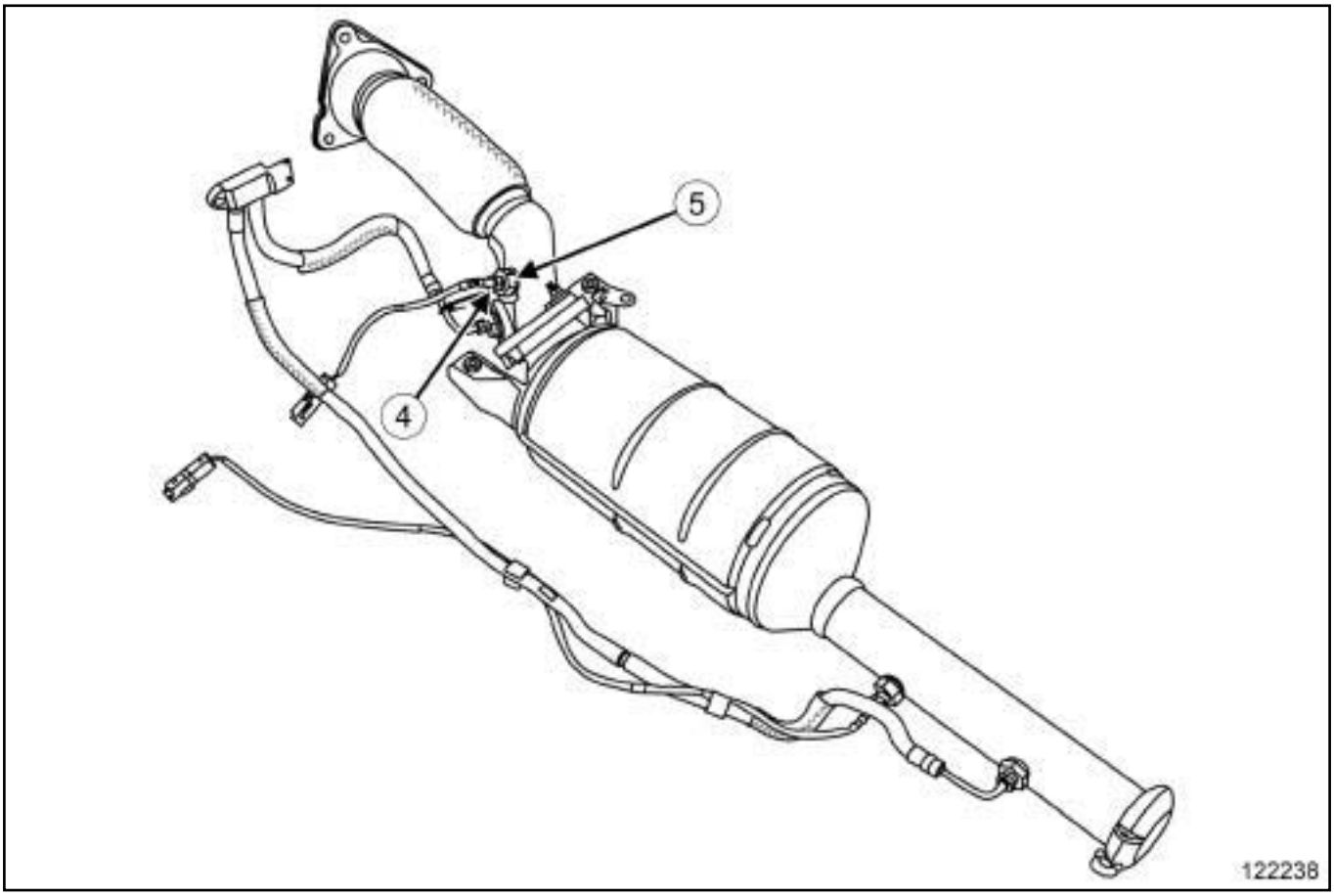

122238

- Disconnect the upstream particle filter temperature sensor connector.
- Remove:
  - the particle filter (see **19B**, **Exhaust**, **Particle filter: Removal - Refitting**, page **19B-85**) ,
  - the upstream particle filter temperature sensor (**4**) from its intermediate adapter bolted to the exhaust pipe (**5**) .

WARNING

When removing the particle filter temperature sensor, the adapter must be held with a lock-wrench.

M9R, and 724

2 - Downstream particle filter temperature sensor

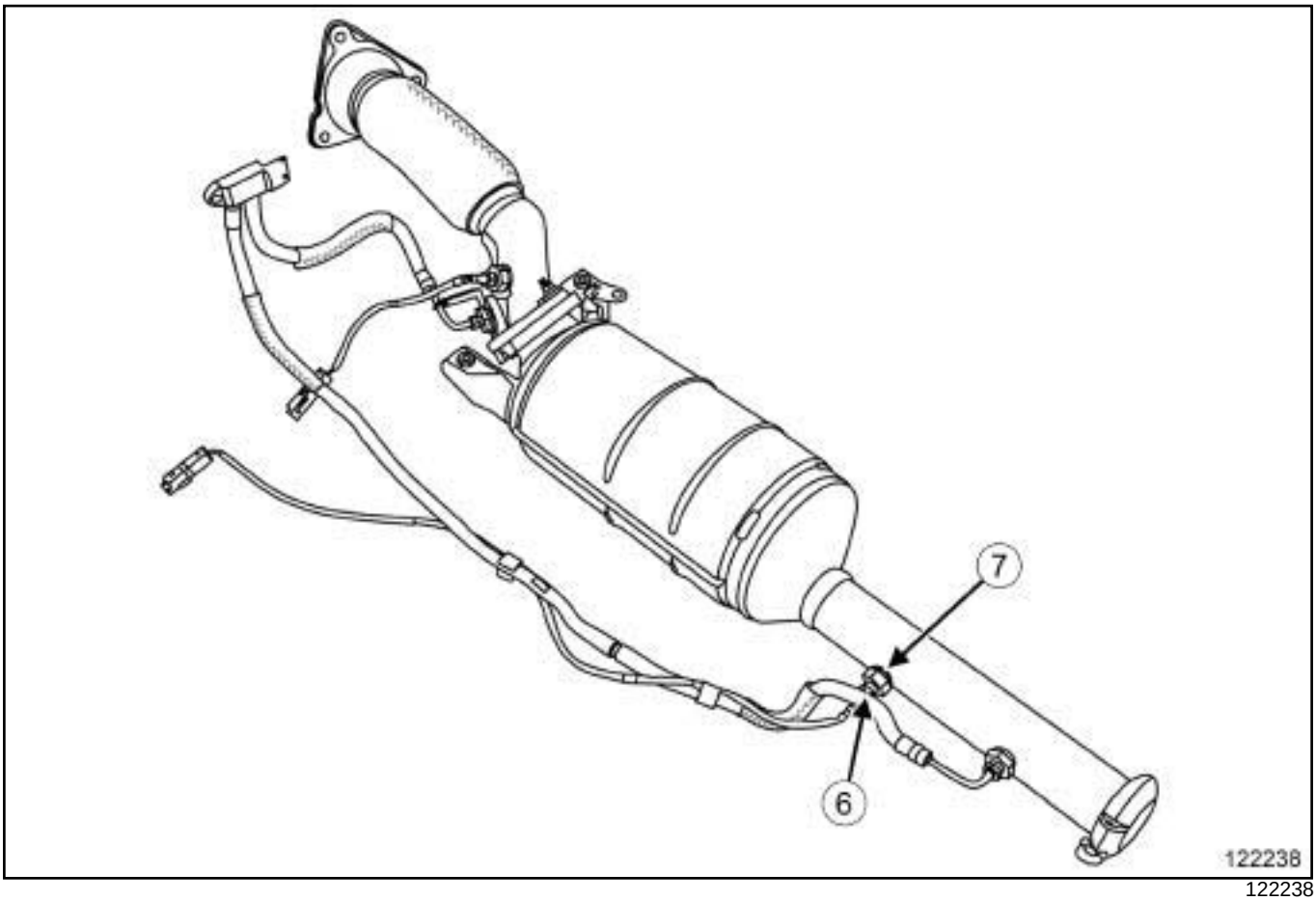

122238

❑ Remove the downstream particle filter temperature sensor (**6**) from its intermediate adapter bolted to the exhaust pipe (**7**) .

> **WARNING**
> When removing the particle filter temperature sensor, the adapter must be held with a lock-wrench.

❑ Disconnect the downstream particle filter temperature sensor connector.

REFITTING

I - REFITTING PREPARATIONS OPERATION

❑ Check the condition of the temperature sensor wiring harnesses.

> Note:
> If necessary, replace the particle filter temperature sensor wiring harnesses.

❑ Coat the particle filter temperature sensor threadings with high temperature **ANTI-SEIZE** (see **Vehicle: Parts and ingredients for the repairwork**) grease (MR 364, 04B, Consumables - Products).

> **WARNING**
> To ensure that the exhaust pipe is correctly sealed, replace any loose adapters on the exhaust pipe.

❑ Make sure that the grease does not run over the threading.

II - REFITTING OPERATION FOR PART CONCERNED

1 - Downstream particle filter temperature sensor

❑ Only tighten the adapter bolted to the exhaust pipe if it has been replaced.

❑ Refit the downstream temperature sensor onto its adapter.

❑ Connect the downstream particle filter temperature sensor connector.

M9R, and 724

2 - Upstream particle filter temperature sensor

- ❑ Only tighten the adapter bolted to the exhaust pipe if it has been replaced.
- ❑ Refit:
  - the upstream particle filter temperature sensor to its adapter,
  - the particle filter (see **19B**, **Exhaust**, **Particle filter: Removal - Refitting**, page **19B-85**) .
- ❑ Connect the upstream particle filter temperature sensor connector.

III - FINAL OPERATION.

- ❑ Fit the electric coolant pump to its mounting.
- ❑ Refit:
  - the reinforcement lower cross member,
  - the reinforcement lower cross member nuts.
  - the engine undertray,
  - the engine undertray bolts.
- ❑ Connect the battery (see **Battery: Removal - Refitting**) (MR 364, 80A, Battery).
- ❑ Before restarting the engine, use the **diagnostic tool** to clear any faults stored by the injection computer.

Exhaust fuel injector: Removal - Refitting

K9K, and 734

Essential equipment
diagnostic tool

Tightening torques	
diesel injector retaining bracket bolt on the catalytic pre-converter	**25 N.m**

Note:

Before carrying out work on the catalytic pre-converter diesel injector (see **19B**, **Exhaust**, **Exhaust: Precautions for repair**, page **19B-1**) .

IMPORTANT

Consult the safety and cleanliness advice and operation recommendations before carrying out any repair (see **13B**, **Diesel injection**, **Diesel injection: Precautions for repair**, page **13B-12**) .

IMPORTANT

Wear protective gloves during the operation.

IMPORTANT

Wear heat protective gloves during the operation.

REMOVAL

I - REMOVAL PREPARATION OPERATION

❏ Position the vehicle on a two-post lift (see **Vehicle: Towing and lifting**) (MR 364, 02A, Lifting equipment).

❏ Connect **diagnostic tool** to the vehicle.

❏ Run command **AC238** "Fuel pump relay" in order to lower the fuel pressure in the exhaust fuel injector supply system.

Note:

Repeat this operation 4 times in order to discharge the residual pressure as much as possible.

❏ Remove:

- the battery (see **Battery: Removal - Refitting**) (MR 364, 80A, Battery),
- the battery tray (see **Battery tray: Removal - Refitting**) (MR 364, 80A, Battery),
- the air filter unit (see **12A**, **Fuel mixture**, **Air filter unit: Removal - Refitting**, page **12A-11**) .

II - OPERATION FOR REMOVAL OF PART CONCERNED

❏ Remove:

- the engine undertray bolts,
- the engine undertray.

K9K, and 734

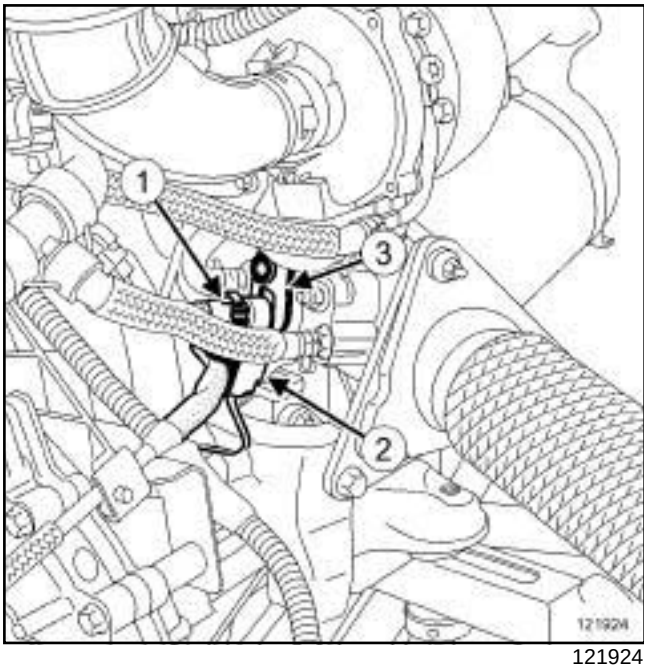

121924

❑

> Note:
>
> Be careful not to damage the connector.

> Note:
>
> Prepare for diesel outflow (pressurised circuit).

❑ Disconnect the diesel injector supply pipe union (**1**) from the catalytic pre-converter.

❑ Plug the openings.

❑ Disconnect the diesel injector connector (**2**) from the catalytic pre-converter.

❑ Remove:

- the retaining bracket bolt (**3**) from the diesel injector on the catalytic pre-converter using a ratchet fitted with an extension and a **T45 male torx socket**,
- the diesel injector retaining bracket (**3**) on the catalytic pre-converter,
- the diesel injector from the catalytic pre-converter fitted with its seal.

❑ Discard the catalytic pre-converter diesel injector seal.

REFITTING

I - REMOVAL PREPARATION OPERATION

❑ Leave the catalytic pre-converter diesel injector to soak in a container filled with diesel.

❑ Wipe the diesel fuel injector using new cleaning cloths (part no. **77 11 211 707**).

> **WARNING**
>
> It is strictly forbidden to clean the injectors with:
>
> - a wire brush,
> - an emery cloth,
> - an ultrasonic cleaner.

❑ Always replace the catalytic pre-converter diesel injector seal.

II - REFITTING OPERATION FOR PART CONCERNED

❑ Refit the catalytic pre-converter diesel injector fitted with its new seal and its retaining bracket to the diesel injector cooler on the catalytic pre-converter.

❑ Before tightening the bracket bolt, ensure that the injector is positioned properly in relation to its bracket: flat surfaces to guide the bracket on the injector ensure this correct position.

If the injector is incorrectly positioned, the entire particle filter will not work properly as the diesel fuel jet will not be correctly oriented.

❑ Refit the diesel injector retaining bracket bolt on the catalytic pre-converter.

❑ Torque tighten the **diesel injector retaining bracket bolt on the catalytic pre-converter (25 N.m)**.

❑ Connect the diesel injector connector to the catalytic pre-converter.

❑ Remove the blanking plugs from the openings.

❑ Connect the diesel injector supply pipe union to the catalytic pre-converter.

III - FINAL OPERATION

❑ Refit:

- the engine undertray,
- the engine undertray bolts.

❑ Refit:

- the air filter unit (see **12A**, **Fuel mixture**, **Air filter unit: Removal - Refitting**, page **12A-11**) ,
- the battery tray (see **Battery tray: Removal - Refitting**) (MR 364, 80A, Battery),
- the battery (see **Battery : Removal - Refitting**) (MR 364, 80A, Battery).

❑ Connect the **diagnostic tool** to the vehicle.

K9K, and 734

- Run command **AC 237** : fuel pump relay.
- Wait for the command to end, then lift the vehicle and check that there are no leaks on the injector circuit: deal with any leaks.

Exhaust fuel injector cooler: Removal - Refitting

K9K, and 732

Essential special tooling	
Ms. 583	Hose clamp pliers.
Mot. 1448	Long nose pliers for hose clips.

Tightening torques ▽	
the nuts of the exhaust fuel injector cooler	**25 N.m**

IMPORTANT
Wear protective gloves during the operation.

REMOVAL

I - REMOVAL PREPARATION OPERATION

❑ Position the vehicle on a two-post lift (see **Vehicle: Towing and lifting**) (02A, Lifting equipment).

❑ Remove:

- the engine undertray bolts,
- the engine undertray,
- the battery (see **Battery: Removal - Refitting**) (80A, Battery),
- the battery tray (see **Battery tray: Removal - Refitting**) (80A, Battery),
- the air filter unit (see **12A**, **Fuel mixture**, **Air filter unit: Removal - Refitting**, page **12A-11**) ,
- the exhaust fuel injector (see **19B**, **Exhaust**, **Exhaust fuel injector: Removal - Refitting**, page **19B-137**) .

II - OPERATION FOR REMOVAL OF PART CONCERNED

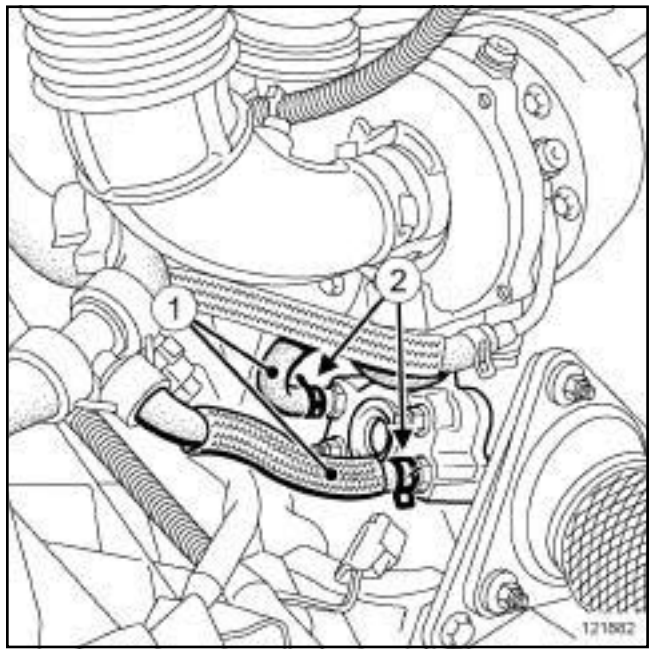

121882

❑ Fit the tools **(Ms. 583)** on the hoses (**1**) of the exhaust fuel injector cooler.

❑ Separate the clips (**2**) on the hoses of the exhaust fuel injector cooler using the tool **(Mot. 1448)**.

WARNING
Prepare for the flow of fluid, and protect the surrounding components.

❑ Disconnect the hoses (**1**) from the exhaust fuel injector cooler.

K9K, and 732

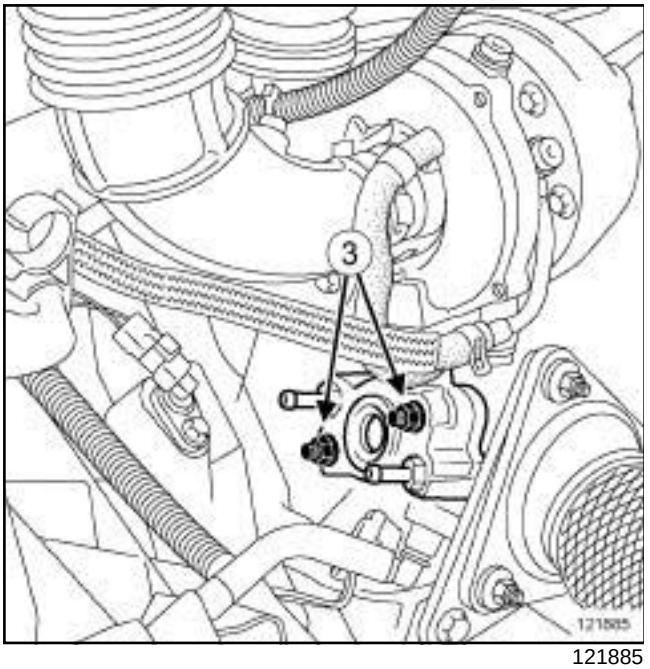

121885

❑ Remove:

- the nuts (**3**) of the exhaust fuel injector cooler,
- the exhaust fuel injector cooler.

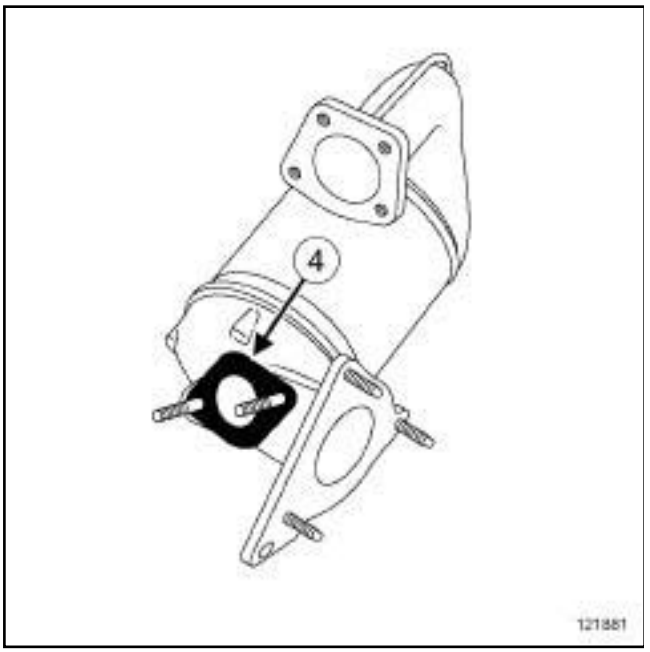

121881

❑ Remove the seal (**4**) from the exhaust fuel injector cooler then discard it.

REFITTING

I - REFITTING PREPARATION OPERATION

❑ Always replace the seal on the exhaust fuel injector cooler.

II - REFITTING OPERATION FOR PART CONCERNED

❑ Refit:

- a new seal for the exhaust fuel injector cooler,
- the exhaust fuel injector cooler.

❑ Torque tighten **the nuts of the exhaust fuel injector cooler (25 N.m)**.

❑ Connect the hoses to the exhaust fuel injector cooler.

❑ Fit the clips on the hoses of the exhaust fuel injector cooler using the tool **(Mot. 1448)**.

❑ Remove the tools **(Ms. 583)** from the hoses of the exhaust fuel injector cooler.

III - FINAL OPERATION

❑ Refit:

- the exhaust fuel injector (see **19B**, **Exhaust**, **Exhaust fuel injector: Removal - Refitting**, page **19B-137**) ,
- the air filter unit (see **12A**, **Fuel mixture**, **Air filter unit: Removal - Refitting**, page **12A-11**) ,
- the battery tray (see **Battery tray: Removal - Refitting**) (80A, Battery),
- the battery (see **Battery : Removal - Refitting**) (80A, Battery).

❑ Fill and bleed the cooling system (see **19A**, **Cooling**, **Cooling circuit: Draining - Refilling**, page **19A-15**) .

❑ Refit the engine undertray.

B84 or C84 or G84 or S84, and F9Q, and 803 or 804

Tightening torques ▽	
exhaust bracket nuts	**21 Nm**

REMOVAL

❑ Remove:

- the particle filter (see **19B**, **Exhaust**, **Particle filter: Removal - Refitting**, page **19B-85**) ,
- the upstream temperature sensor to its adapter on the exhaust pipe (see **19B**, **Exhaust**, **Particle filter temperature sensors: Removal - Refitting**, page **19B-125**) ,
- the upstream pressure tapping to its adapter on the exhaust pipe (see **19B**, **Exhaust**, **Particle filter pressure sensor: Removal - Refitting**, page **19B-114**) .

❑ Remove:

- the nuts for the exhaust flange between the connection hose and the particle filter,
- the flexible pipe.

REFITTING

❑

WARNING

Always replace:

- the flange seal between the connection hose and the catalytic pre-converter,
- the flange seal between the connection hose and particle filter,

WARNING

Always clean the bearing surfaces thoroughly on:

- the catalytic pre-converter - flexible pipe connecting brackets,
- the flange between the connection hose and the particle filter,

❑ Refit:

- the connecting hose with new seals,
- the upstream temperature sensor to its adapter on the exhaust pipe (see **19B**, **Exhaust**, **Particle filter temperature sensors: Removal - Refitting**, page **19B-125**) ,
- the upstream pressure tapping to its adapter on the exhaust pipe (see **19B**, **Exhaust**, **Particle filter pressure sensor: Removal - Refitting**, page **19B-114**) .

❑ Torque tighten the **exhaust bracket nuts (21 Nm)** between the connecting hose and the particle filter.

❑ Refit the particle filter (see **19B**, **Exhaust**, **Particle filter: Removal - Refitting**, page **19B-85**) .

M9R, and 724

Note:

Before carrying out any work on the flexible pipe (see **19B**, **Exhaust**, **Exhaust: Precautions for repair**, page **19B-1**) .

REMOVAL

I - REMOVAL PREPARATION OPERATION

❑ Position the vehicle on a two-post lift (see **Vehicle: Towing and lifting**) (MR 364, 02A, Lifting equipment).

❑ Remove:

- the engine undertray bolts,
- the engine undertray.

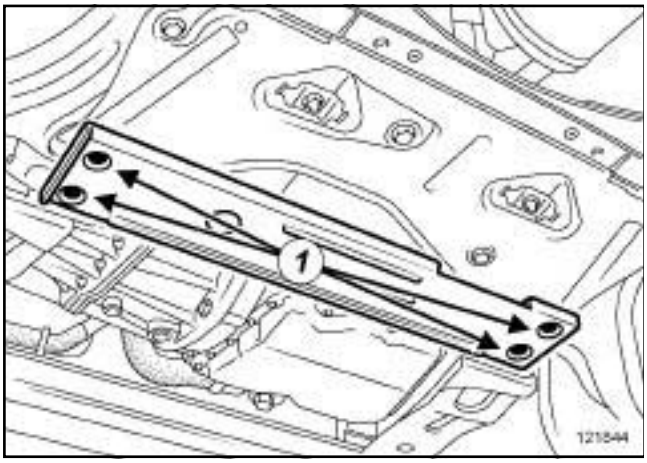

121844

❑ Remove:

- the reinforcement lower cross member nuts (**1**) ,
- the reinforcement lower cross member.

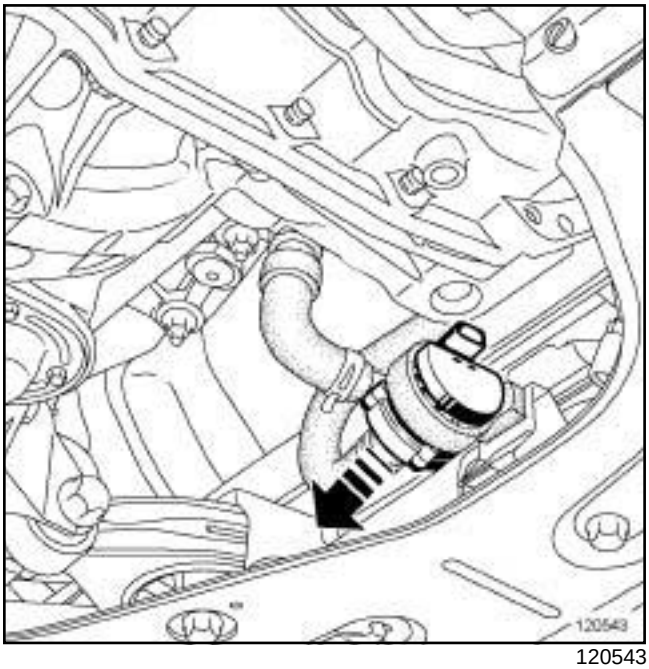

120543

❑ Remove the electric coolant pump from its mounting.

❑ Remove the particle filter (see **19B**, **Exhaust**, **Particle filter: Removal - Refitting**, page **19B-85**) .

M9R, and 724

II - OPERATION FOR REMOVAL OF PART CONCERNED

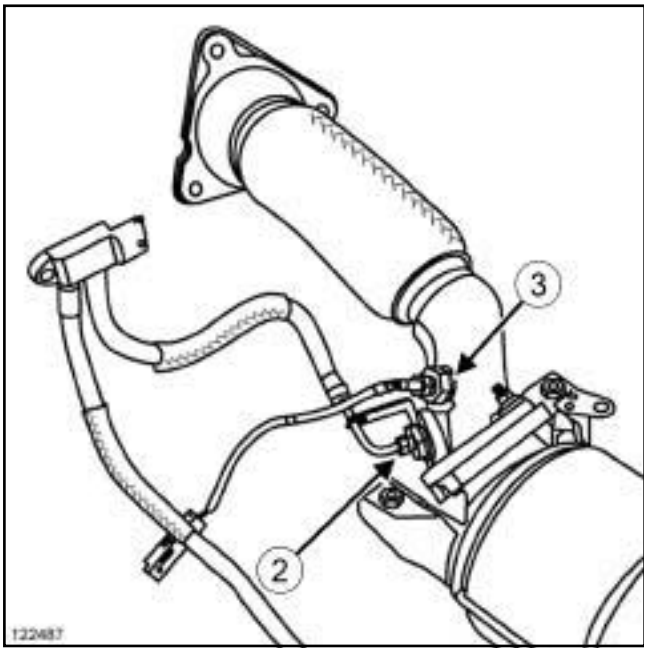

122487

❑ Remove the flexible pipe:

- the particle filter pressure sensor (**2**) (see **19B**, **Exhaust**, **Particle filter pressure sensor: Removal - Refitting**, page **19B-114**) ,
- the particle filter temperature sensor (**3**) (see **19B**, **Exhaust**, **Particle filter temperature sensors: Removal - Refitting**, page **19B-125**) .

❑ Remove:

- the flexible pipe nuts (**2**) ,
- the flexible connection pipe,
- the seal between the particle filter and the flexible pipe.

REFITTING

I - REFITTING PREPARATIONS OPERATION

❑ The exhaust bracket bearing faces between the exhaust hose and the catalytic pre-converter and the bearing faces between the flexible pipe and the catalytic converter must be carefully cleaned with an abrasive pad.

❑ Degrease the bearing faces with degreaser and clean cloths.

❑ Always replace the seal between the particle filter and the flexible pipe.

II - REFITTING OPERATION FOR PART CONCERNED

❑ Refit:

- the new seal between the particle filter and the flexible pipe,
- the flexible connection pipe,
- the flexible pipe nuts.

❑ Refit the following on the flexible pipe:

- the particle filter temperature sensor (see **19B**, **Exhaust**, **Particle filter temperature sensors: Removal - Refitting**, page **19B-125**) ,
- the particle filter pressure sensor: (see **19B**, **Exhaust**, **Particle filter pressure sensor: Removal - Refitting**, page **19B-114**)

III - FINAL OPERATION.

❑ Refit the particle filter (see **19B**, **Exhaust**, **Particle filter: Removal - Refitting**, page **19B-85**) .

❑ Fit the electric coolant pump onto its mounting.

❑ Refit:

- the reinforcement lower cross member,
- the reinforcement lower cross member nuts,
- the engine undertray,
- the engine undertray bolts.

Connecting hose: Removal - Refitting

K9K, and 734

Essential equipment
diagnostic tool

Note:

Before carrying out any work on the flexible pipe (see **19B**, **Exhaust**, **Exhaust: Precautions for repair**, page **19B-1**) .

REMOVAL

I - REMOVAL PREPARATION OPERATION

❑ Position the vehicle on a two-post lift (see **Vehicle: Towing and lifting**) (MR 364, 02A, Lifting equipment).

❑ Disconnect the battery (see **Battery: Removal - Refitting**) (MR 364, 80A, Battery).

❑ Remove the particle filter (see **19B**, **Exhaust**, **Particle filter: Removal - Refitting**, page **19B-85**) .

II - OPERATION FOR REMOVAL OF PART CONCERNED

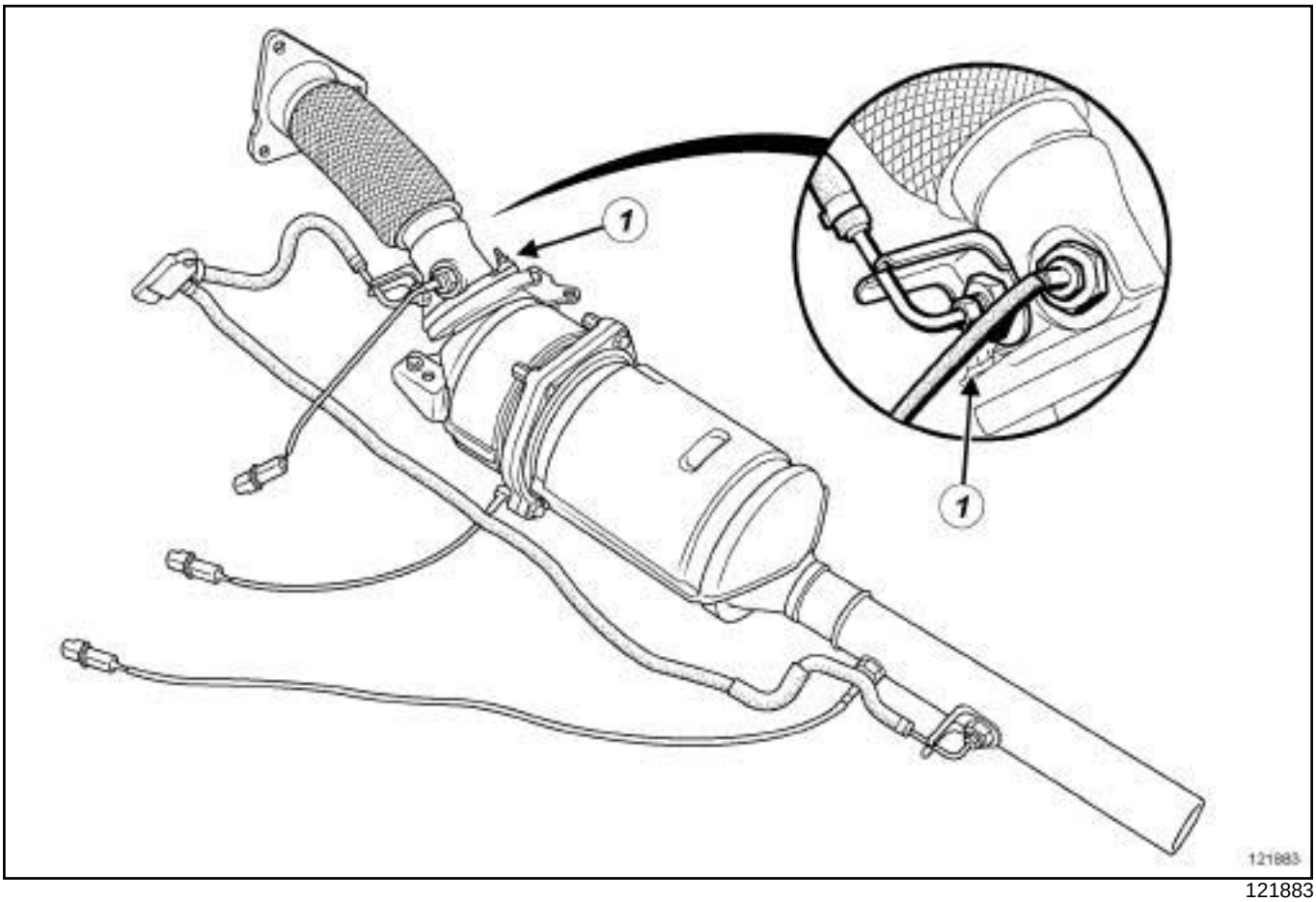

121883

❑ Remove:

- the flexible pipe nuts (**1**) ,
- the particle filter pressure sensor on the flexible pipe (see **19B**, **Exhaust**, **Particle filter pressure sensor: Removal - Refitting**, page **19B-114**) ,
- the flexible connection pipe,
- the seal between the flexible pipe and the catalytic converter.

❑ Discard the seal between the flexible pipe and the catalytic converter.

❑ If replacing the flexible pipe, remove the catalytic converter upstream temperature sensor (see **19B**, **Exhaust**, **Particle filter temperature sensors: Removal - Refitting**, page **19B-125**) .

K9K, and 734

REFITTING

I - REFITTING PREPARATIONS OPERATION

- The exhaust bracket bearing faces between the exhaust hose and the catalytic pre-converter and the bearing faces between the flexible pipe and the catalytic converter must be carefully cleaned with an abrasive pad.
- Degrease the bearing faces with degreaser and clean cloths.
- Always replace the seal between the flexible pipe and the catalytic converter.
- If replacing the flexible pipe, refit the catalytic converter upstream temperature sensor (see **19B**, **Exhaust**, **Particle filter temperature sensors: Removal - Refitting**, page **19B-125**) .

II - REFITTING OPERATION FOR PART CONCERNED

- Refit:
  - the seal between the flexible pipe and the new catalytic converter,
  - the flexible connection pipe,
  - the particle filter pressure sensor on the flexible pipe (see **19B**, **Exhaust**, **Particle filter pressure sensor: Removal - Refitting**, page **19B-114**) ,
  - the flexible pipe nuts.

III - FINAL OPERATION.

- Refit the particle filter (see **19B**, **Exhaust**, **Particle filter: Removal - Refitting**, page **19B-85**) .
- Connect the battery (see **Battery : Removal - Refitting**) (MR 364, 80A, Battery).
- Before starting the engine, use the **diagnostic tool** to clear any faults stored by the injection computer.
- If replacing the particle filter, reinitialise the particle filter parameters (see **Fault finding - Replacement of components**) (MR 366, 13B, Diesel injection).

B84 or C84 or G84 or S84, and F4R or K4J or K4M

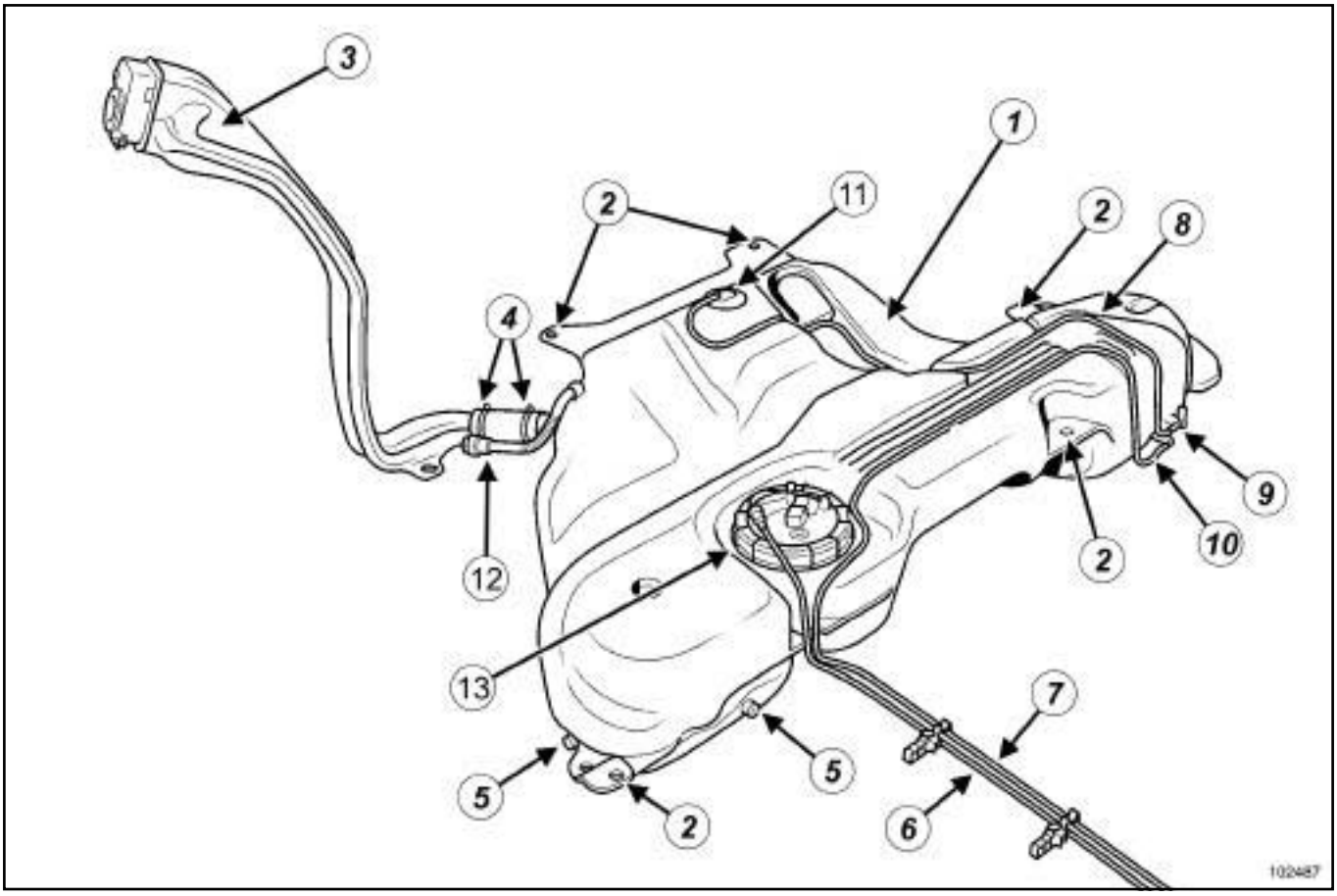

102487

No.	Description
1	Tank
2	Mounting holes
3	Filler neck
4	Neck mounting clips
5	Brake pipe mounting clips
6	Fuel supply pipe
7	Fuel vapour supply pipe
8	Fuel vapour absorber supply pipe (from the tank)
9	Breather
10	Fuel vapour absorber
11	Overfill prevention valve and leak prevention valve in case of vehicle roll-over
12	Anti-backflow pipe (degassing - filling)
13	Petrol aspiration assembly

B84 or C84 or G84 or S84, and F4R or K4J or K4M

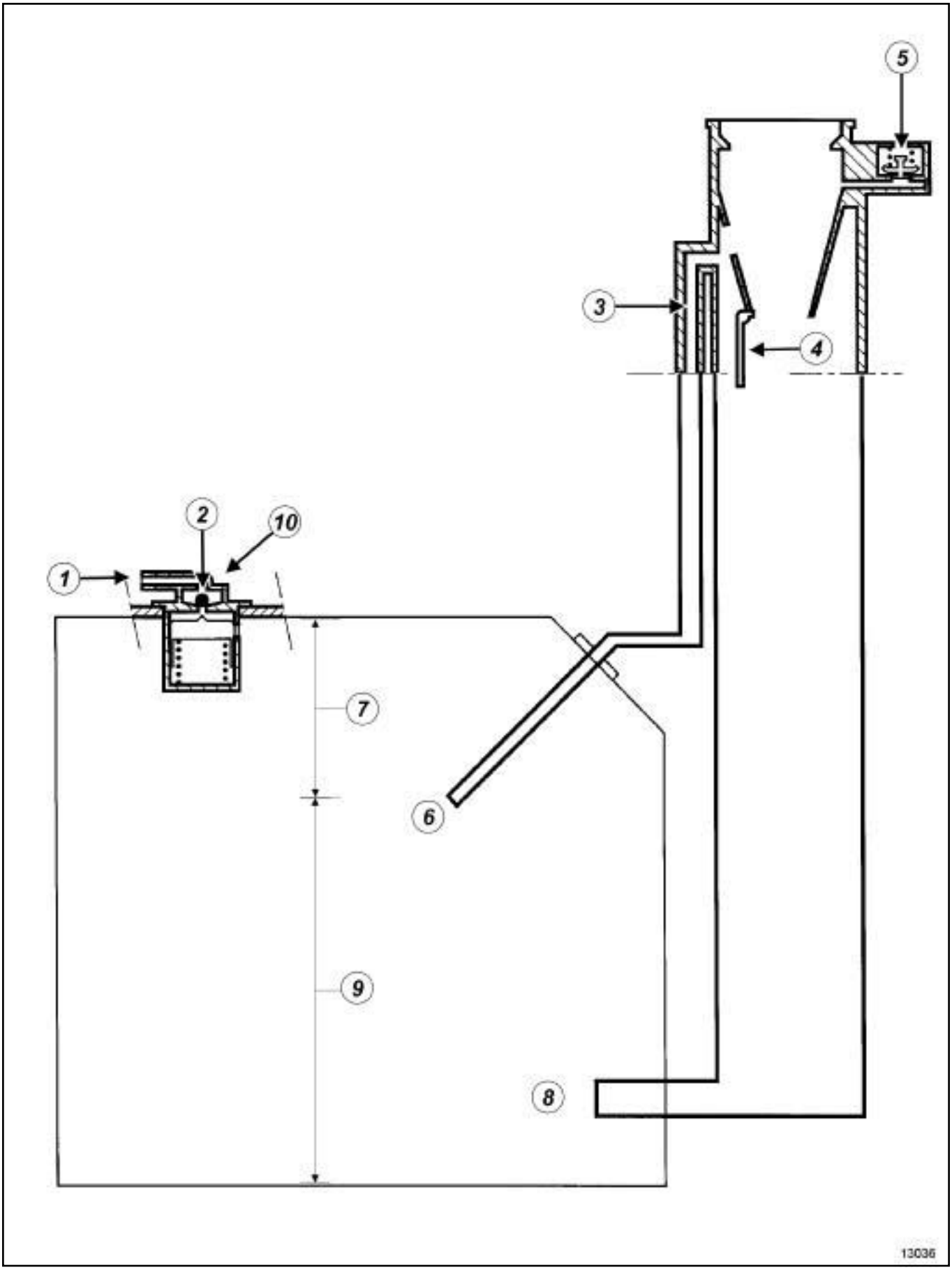

B84 or C84 or G84 or S84, and F4R or K4J or K4M

13036

No.	Description
1	Connection to fuel vapour absorber
2	Overfill prevention ball
3	Filling anti-splashback pipe
4	Restriction valve
5	Excess pressure/underpressure safety valve
6	Air outlet hole during filling
7	Volume of air allowing fuel expansion
8	Fuel inlet for filling
9	Usable fuel volume
10	Overfill prevention valve and leak prevention valve in case of vehicle roll-over

ROLE OF THE FILLER NECK AND VALVES

1 - Overpressure/underpressure safety valves

If the fuel vapour recirculation circuit is blocked, this valve prevents the fuel tank being subjected to excess pressure (the tank expands) or under-pressure (as fuel is used, the tank collapses).

2 - Restriction valve

This valve prevents diesel fuel or leaded petrol pump nozzles from entering the tank.

3 - Overfill prevention valve and leak prevention valve in case of vehicle roll-over

The ball acts as an overfill prevention valve.

When the vehicle is stationary, during filling, the ball rests on its seat, retaining a specific volume of air in the tank.

When the vehicle is moving, the ball leaves its seat, enabling a connection between the tank and the fuel vapour absorber.

When the tank is full, a sufficient volume of air to allow the fuel contained within it to expand must remain in the tank, but not so much as to make the tank burst.

The vehicle roll over leak prevention valve prevents the fuel tank from emptying via the pipe to the petrol vapour absorber.

4 - Filler neck

The filler neck for unleaded petrol has:

- a smaller diameter filling opening (restriction valve). Leaded petrol damages the toxic fume filter system: catalytic converter and lambda sensor,
- a valve blocking the filling opening (to prevent fuel vapour release or backflow of petrol),
- a leaktight cap.

B84 or C84 or G84 or S84, and K9K – B84 or C84 or G84 or S84, and F9Q – B84 or C84 or G84 or S84, and M9R

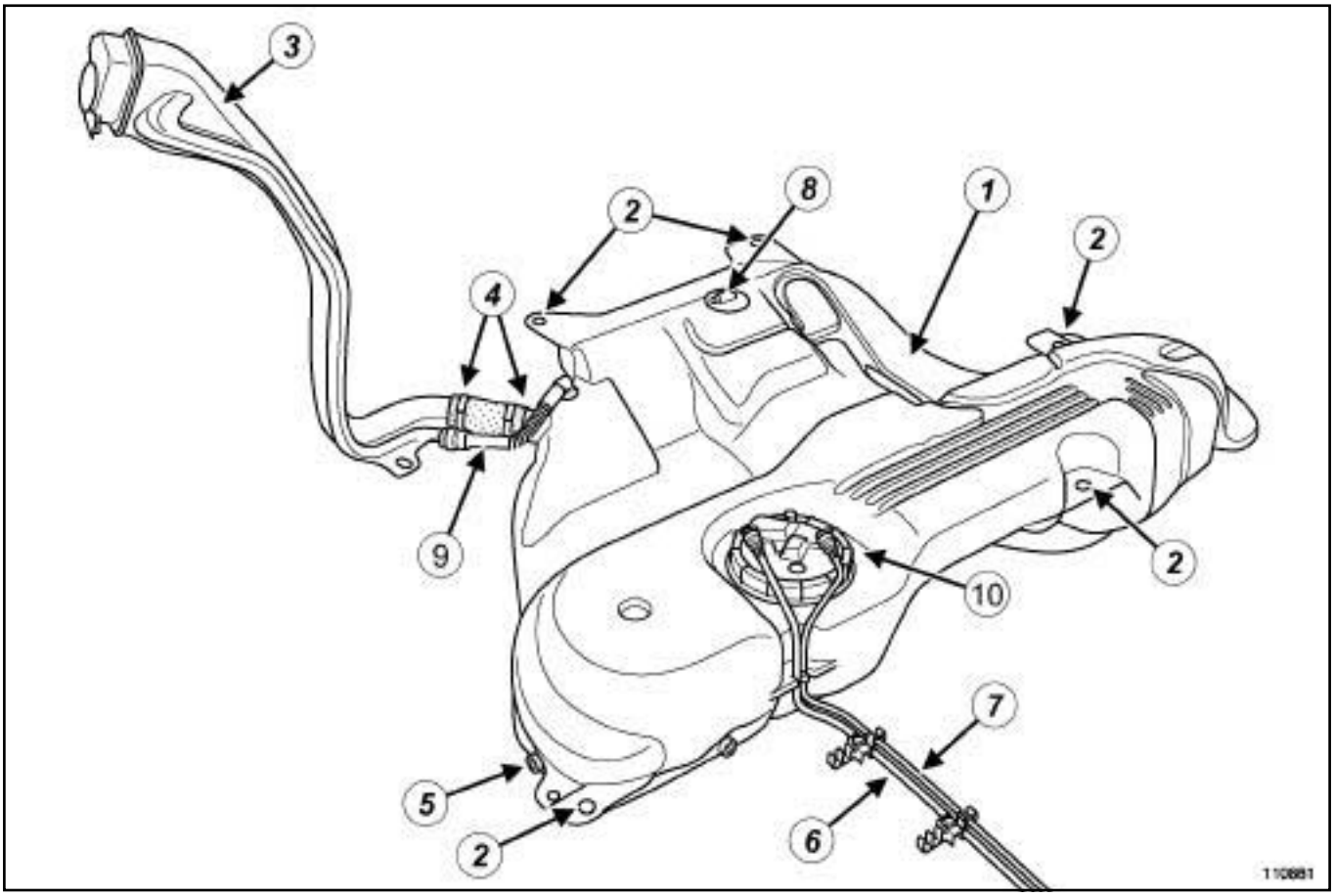

110881

No.	Description
1	Tank
2	Mounting holes
3	Filler neck
4	Neck mounting clips
5	Brake pipe mounting clips
6	Fuel supply pipe
7	Fuel return pipe
8	Fuel tank venting valve and vehicle roll-over leak prevention valve
9	Anti-backflow pipe (degassing - filling)
10	Diesel aspiration assembly

B84 or C84 or G84 or S84, and K9K – B84 or C84 or G84 or S84, and F9Q – B84 or C84 or G84 or S84, and M9R

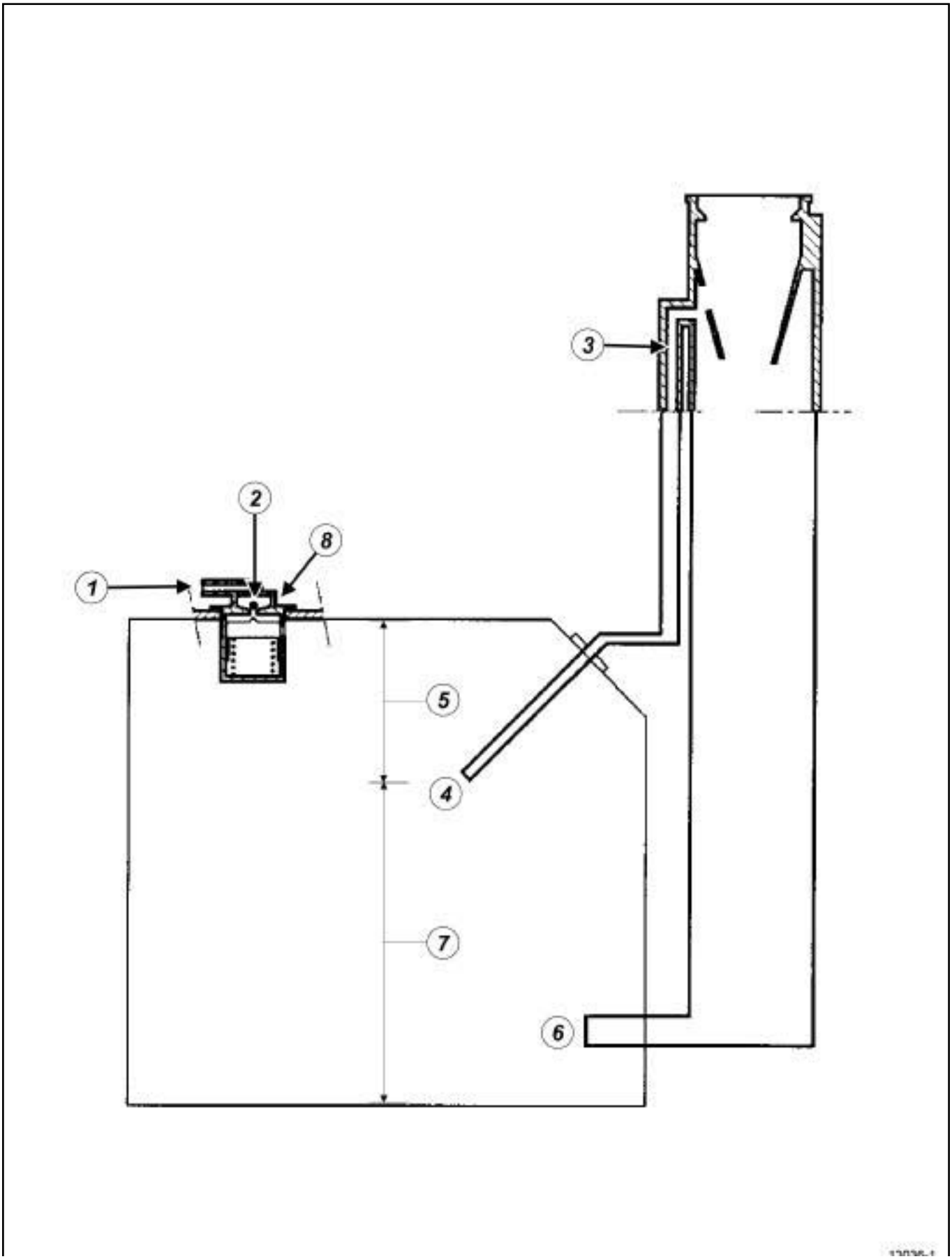

B84 or C84 or G84 or S84, and K9K – B84 or C84 or G84 or S84, and F9Q – B84 or C84 or G84 or S84, and M9R

13036-1

No.	Description
1	Breather
2	Overfill prevention ball
3	Filling anti-splashback pipe
4	Air outlet hole during filling
5	Volume of air allowing fuel expansion
6	Fuel inlet for filling
7	Usable fuel volume
8	Fuel tank venting valve and vehicle roll-over leak prevention valve

ROLE OF THE FILLER NECK AND VALVES

1 - Overfill prevention valve and leak prevention valve in case of vehicle roll-over

The ball acts as an overfill prevention valve.

When the vehicle is stationary, during filling, the ball rests on its seat, retaining a specific volume of air in the tank.

When the vehicle is moving, the ball leaves its seat, enabling ventilation of the fuel tank.

When the tank is full, it is vital that a sufficient volume of air remains inside the tank to allow the fuel it contains to expand, but not to such an extent that it may burst.

The vehicle roll-over leak prevention valve prevents the tank from emptying via the ventilation pipe.

2 - Filler neck

The filler neck for unleaded fuel has a leaktight cap.

B84 or C84 or G84 or S84, and F4R or K4J or K4M

Essential special tooling	
Mot. 1311-08	Union for measuring fuel pressure.

WARNING

During this operation, be sure to:

- refrain from smoking or bringing red hot objects close to the work area,
- guard against petrol splashes caused by the residual pressure in the pipes,
- protect sensitive areas from fuel outflow.

IMPORTANT

Wear goggles with side protectors for this operation.

IMPORTANT

Wear latex gloves during the operation.

WARNING

To prevent impurities from entering the circuit, plugs must be fitted to the openings of all the fuel circuit components exposed to the open air.

WARNING

To avoid any corrosion or damage, protect the areas on which fuel is likely to run.

DRAINING THE FUEL TANK

K4J – F4R

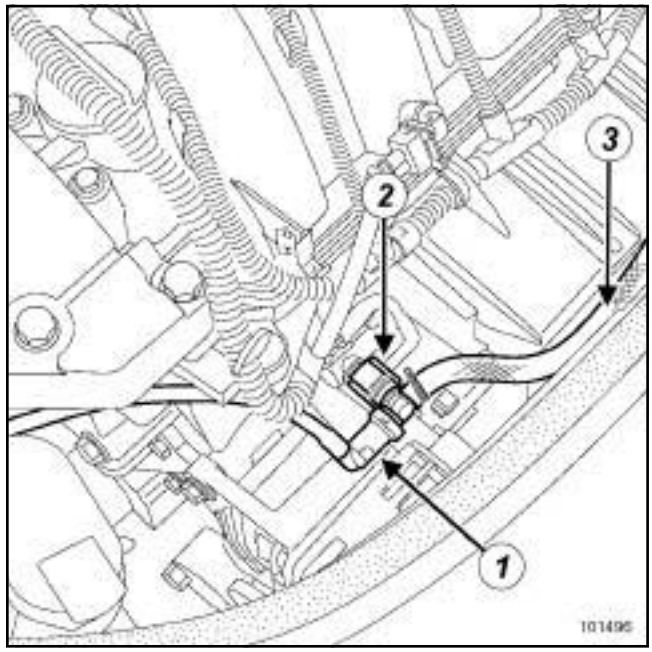

101496

❑ Disconnect the fuel supply union (**1**) .

❑ Fit the (**2**) « T » **(Mot. 1311-08)** union.

❑ Connect the siphoning pump (**3**) to the « T » union outlet.

B84 or C84 or G84 or S84, and F4R or K4J or K4M

K4M

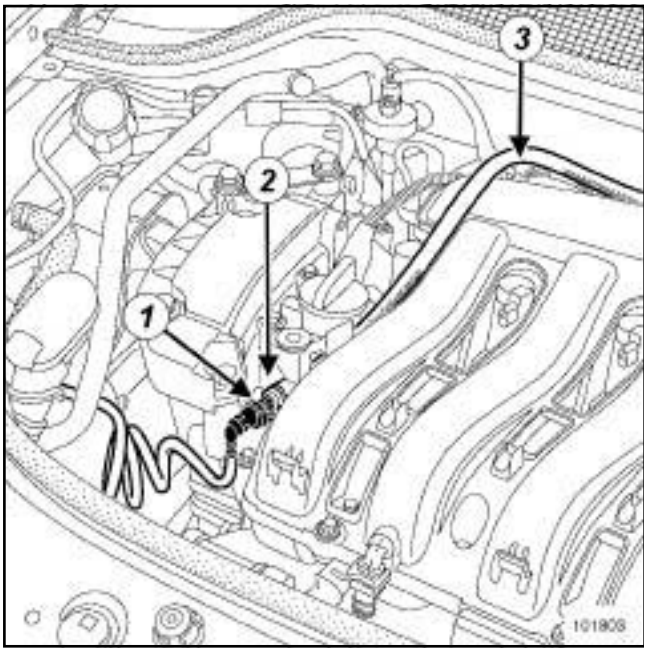

101803

- ❑ Disconnect the fuel inlet union (**1**) .
- ❑ Fit a (**2**) « T » union.
- ❑ Connect the siphoning pump (**3**) to the « T » union outlet.

- ❑ Activate the siphoning pump to drain the tank.

B84 or C84 or G84 or S84, and F9Q or K9K or M9R

Essential equipment
pneumatic transfer pump for fuels

IMPORTANT

During this operation, be sure to:

- refrain from smoking or bringing red hot objects close to the work area,
- beware of fuel splashes when disconnecting the union,
- protect sensitive areas from fuel outflow.

DRAINING THE FUEL TANK

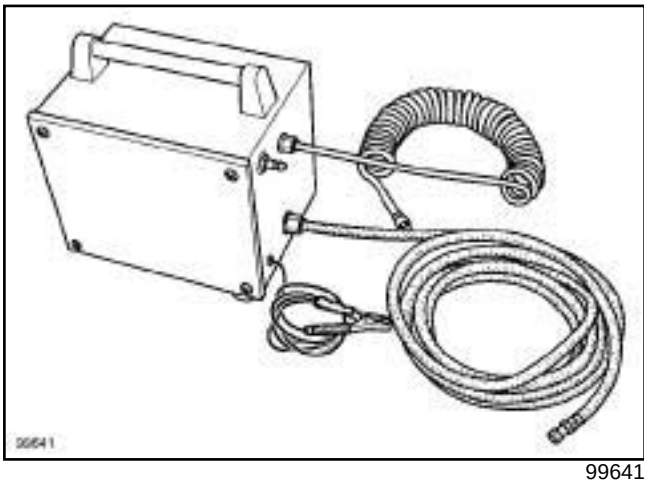

99641

❑ Disconnect the battery (see **Battery: Removal - Refitting**) (MR 364, 80A, Battery).

Note:

As diesel vehicles are not fitted with an electrical fuel pump, the **pneumatic transfer pump for fuels** must be used to drain the fuel tank.

❑ Lift the rear bench seat base (see **Rear bench seat base: Removal - Refitting**) (MR 365, 76A, Rear seat frames and runners).

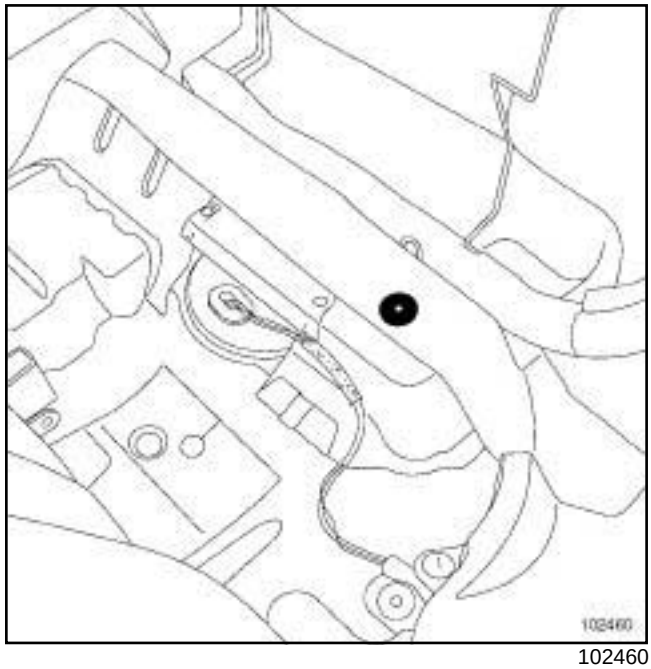

102460

❑ Remove the carpet retaining clip.

❑ Move the carpet aside.

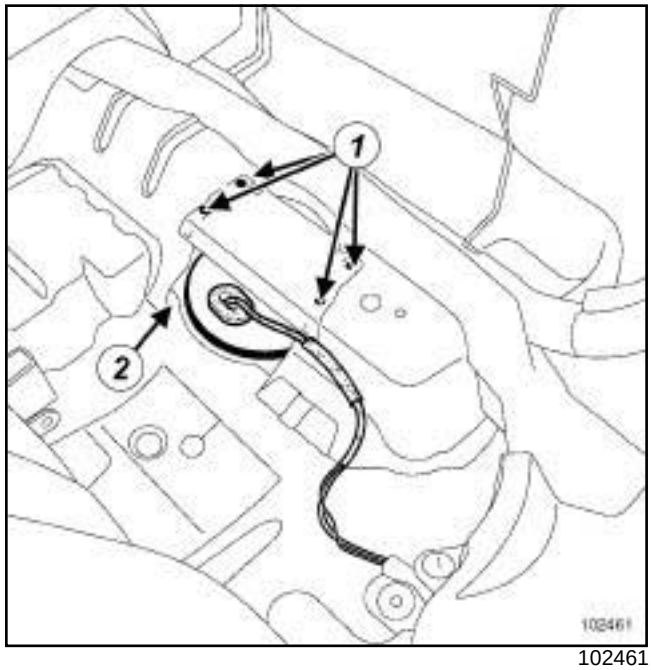

102461

❑ Remove:

- the closure panel bolts (**1**) ,
- the closure panel,
- the inspection flap blanking cover (**2**) .

B84 or C84 or G84 or S84, and F9Q or K9K or M9R

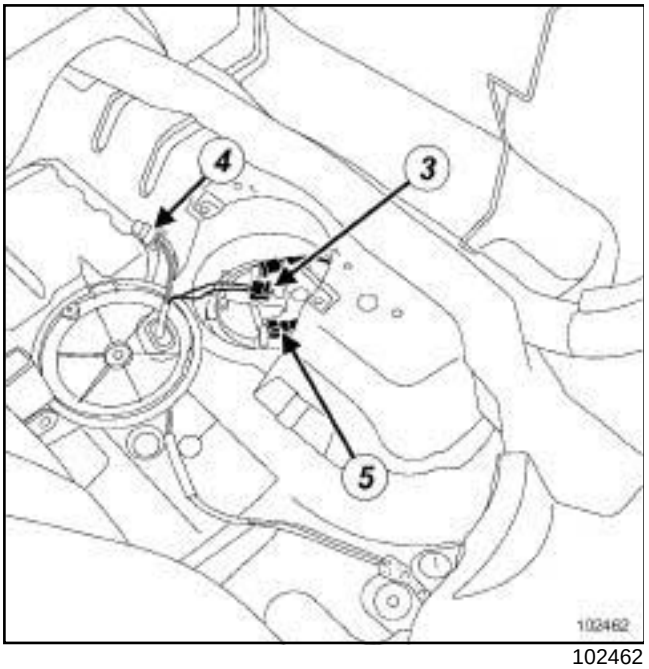

102462

- ❑ Disconnect:
  - the fuel sender connector (**3**) ,
  - the body height sensor connector (**4**) (if fitted to the vehicle),
  - union (**5**) .
- ❑ Make preparations for fuel outflow.
- ❑ Connect the suction pipe of the **pneumatic transfer pump for fuels** in the place of the diesel fuel supply quick release union ***(5)*** .
- ❑ Place the **siphoning pump** splashback pipe into a container.
- ❑ Run the **pneumatic transfer pump for fuels**.
- ❑ Let the fuel flow out until it the flow is intermittent.
- ❑ Drain the tank.
- ❑ Proceed in the reverse order to removal.
- ❑ Connect the battery (see **Battery : Removal - Refitting**) (MR 364, 80A, Battery).

Fuel tank: Removal - Refitting

B84 or C84 or G84 or S84

Essential equipment
component jack

Tightening torques ▽	
wheel bolt	**110 Nm**
tank mounting	**21 Nm**
battery cover mounting bolts	**4 Nm**

IMPORTANT

During this operation, be sure to:

- refrain from smoking or bringing red hot objects close to the working area,
- beware of fuel splashes when disconnecting the union,
- protect sensitive areas from fuel outflow.

REMOVAL

❑ Drain the tank (see **19C**, **Tank**, **Fuel tank: Draining**, page **19C-7**) .

❑ Remove the « pump-sender-filter » (see **19C**, **Tank**, **Pump-sender unit-filter: Removal - Refitting**, page **19C-18**) assembly for petrol engines or the sender (see **19C**, **Tank**, **Sender unit: Removal - Refitting**, page **19C-15**) for diesel engines.

❑ Position the vehicle on a two-post lift (see **Vehicle: Towing and lifting**) (MR 364, 02A, Lifting equipment).

❑ Disconnect the battery (see **Battery : Removal - Refitting**) (MR 364, 80A, Battery).

❑ Remove:

- the engine undertray,
- the exhaust clamp - manifold mounting nuts,
- the expansion chamber - body mounting bolt,
- the silencer rubber mounting bush support connecting bolts,
- the exhaust pipe from the sub-frame and the rear axle.

❑ Disconnect the headlight height adjustment sensor wiring (depending on vehicle equipment level).

❑ Unclip the headlight height adjustment sensor linkage (depending on vehicle equipment level).

F4R or K4J or K4M

❑ Remove the petrol vapour absorber (see **14A**, **Anti-pollution**, **Fuel vapour canister: Removal - Refitting**, page **14A-3**) .

❑ Unclip the petrol vapour absorber pipes.

❑ Disconnect the connectors on the « Pump-Sender-Filter » assembly (see **19C**, **Tank**, **Pump-sender unit-filter: Removal - Refitting**, page **19C-18**) .

B84 or C84 or G84 or S84

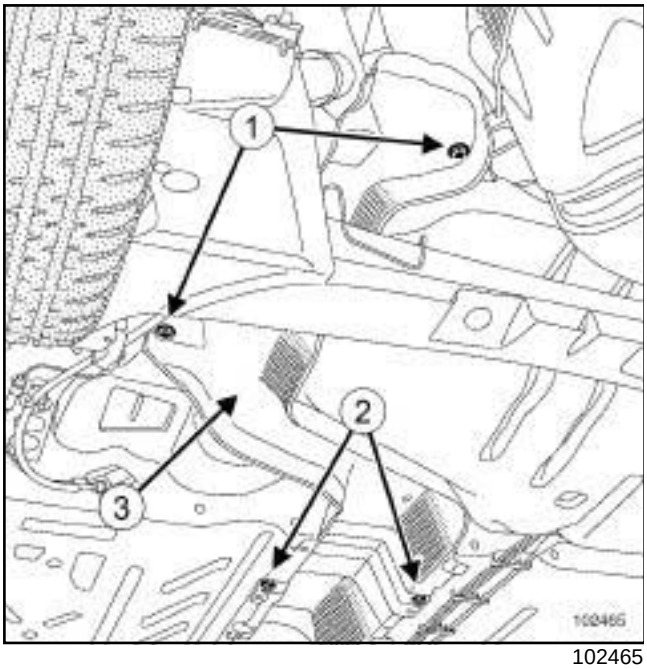

102465

❑ Remove:

- the mounting bolts (**1**) from the fuel tank and the heat shield,
- the retaining clips (**2**) from the heat shield,
- heat shield (**3**) .

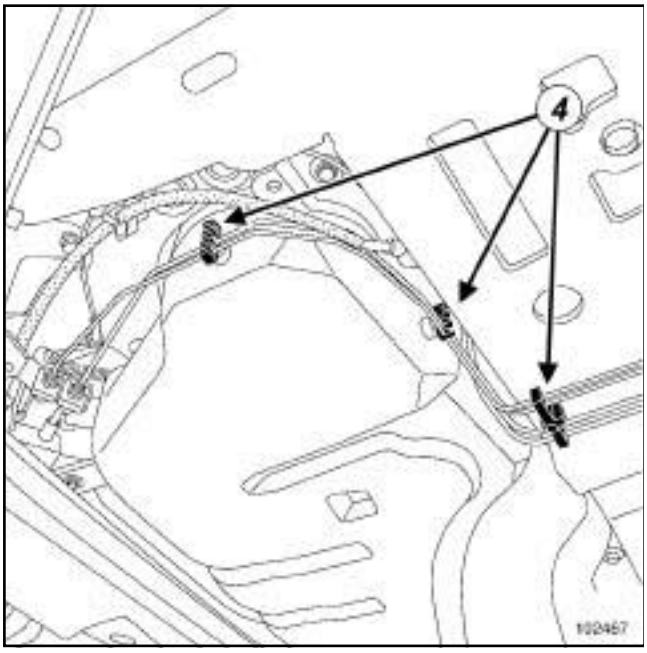

102467

❑ Remove the retaining clips (**4**) from the brake and fuel pipes.

❑ Unclip:

- the fuel pipe unions at the catalytic converter,
- the clips from the fuel pipes.

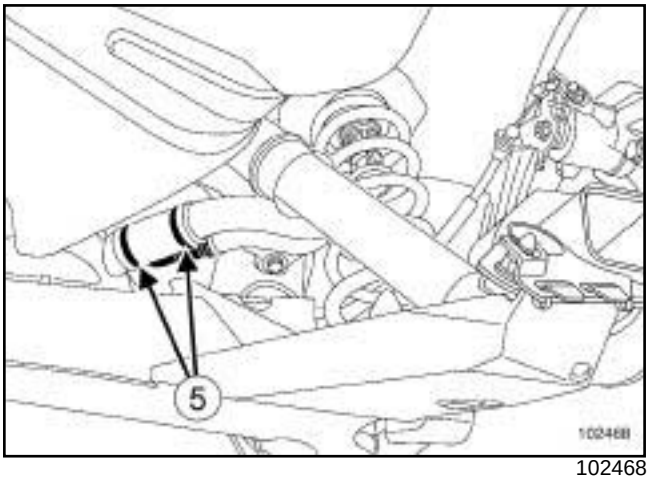

102468

❑ Remove the clips (**5**) from the tank connection hose and the filler neck.

❑ Move the hoses to one side.

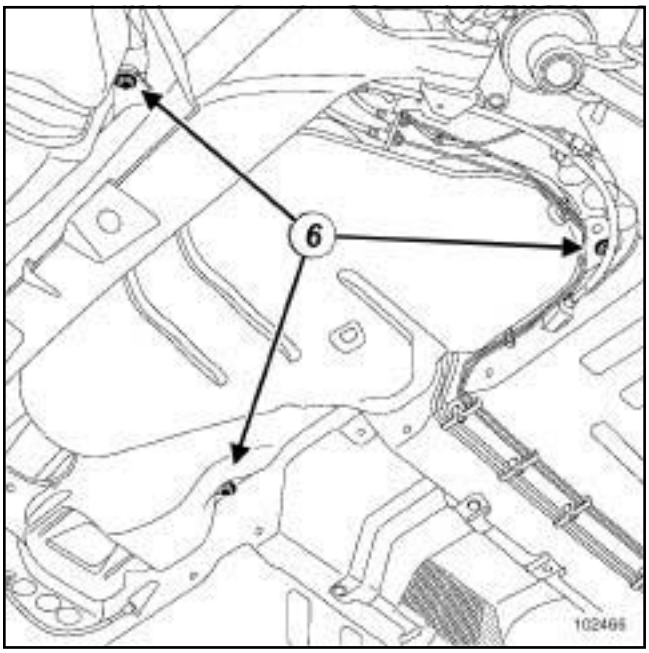

102466

❑ Position the **component jack** under the tank.

❑ Remove the mounting bolts (**6**) from the tank.

❑ Lower the fuel tank.

B84 or C84 or G84 or S84

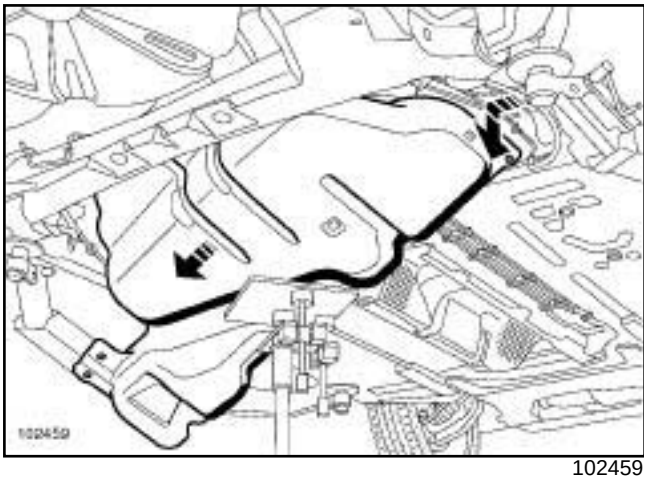

102459

- ❑ Remove the tank by turning it around the exhaust pipe.
- ❑ Take care not to damage the brake pipes or the parking brake cable.

REFITTING

- ❑ Reshape the heat shield.
- ❑ Take care not to bring the heat shield into contact with the tank.
- ❑ The tank hose securing clips must always be replaced.
- ❑ Proceed in the reverse order to removal.
- ❑ Torque tighten:
  - the **wheel bolt (110 Nm)**,
  - the **tank mounting (21 Nm)**.
- ❑ Check that the fuel pipe unions click into place.
- ❑ Refit the « pump-sender-filter » assembly (see **19C**, **Tank**, **Pump-sender unit-filter: Removal - Refitting**, page **19C-18**) for petrol engines or the sender (see **19C**, **Tank**, **Sender unit: Removal - Refitting**, page **19C-15**) for diesel engines.
- ❑ Connect the battery (see **Battery : Removal - Refitting**) (MR 364, 80A, Battery).
- ❑ Torque tighten the **battery cover mounting bolts (4 Nm)**.

B84 or C84 or G84 or S84

Tightening torques ▽	
battery cover mounting bolts	**4 Nm**

IMPORTANT

During this operation, it is essential to:

- refrain from smoking or bringing red hot objects near the working area,
- beware of fuel splashes when disconnecting the union,
- protect sensitive areas from fuel outflow.

REMOVAL

❑ Drain the tank (see **19C**, **Tank**, **Fuel tank: Draining**, page **19C-7**) .

❑ Position the vehicle on a two-post lift (see **Vehicle: Towing and lifting**) (MR 364, 02A, Lifting equipment).

❑ Disconnect the battery (see **Battery: Removal - Refitting**) (MR 364, 80A, Battery).

❑ Remove:

- the rear right-hand wheel,
- the rear right-hand wheel arch liner.

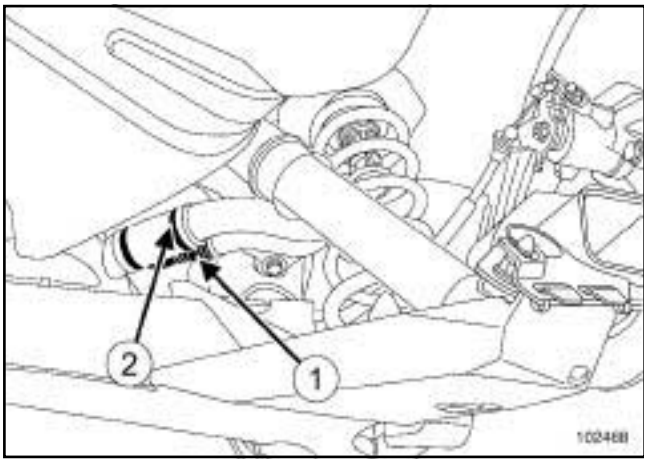

102468

❑ Disconnect the anti-splashback pipe (**1**) .

❑ Remove filler pipe clips (**2**) .

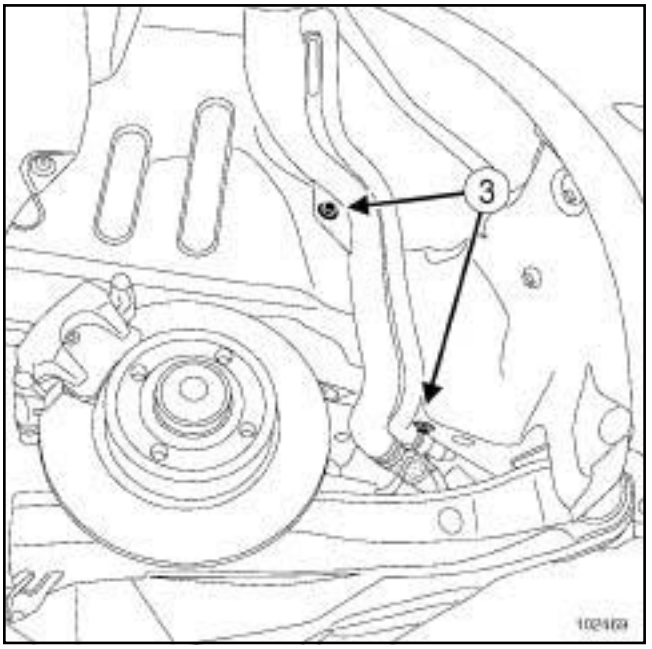

102469

❑ Remove the mounting bolts (**3**) from the filler neck.

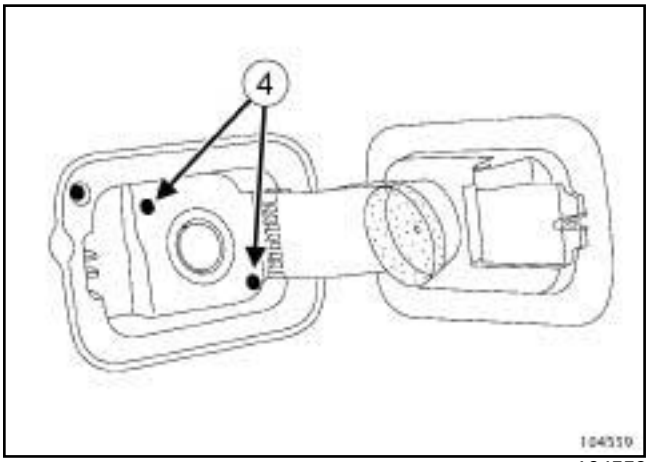

104559

❑ Remove:

- the mounting bolts (**4**) from the filler neck,
- the filler neck.

REFITTING

❑ Always replace the clips with new ones.

❑ Proceed in the reverse order to removal.

❑ Connect the battery (see **Battery : Removal - Refitting**) (MR 364, 80A, Battery).

❑ Torque tighten the **battery cover mounting bolts (4 Nm)**.

Sender unit: Removal - Refitting

B84 or C84 or G84 or S84, and F9Q or K9K or M9R

Essential special tooling	
Mot. 1397	Universal petrol tank gauge nut wrench.

Tightening torques ▽	
battery cover mounting bolts	**4 Nm**

IMPORTANT

During this operation, it is essential to:

- refrain from smoking or bringing red hot objects close to the working area,
- beware of fuel splashes when disconnecting the union,
- protect sensitive areas from fuel outflow.

REMOVAL

❑ Disconnect the battery (see **Battery: Removal - Refitting**) (MR 364, 80A, Battery).

❑ Drain the fuel tank (see **19C**, **Tank**, **Fuel tank: Draining**, page **19C-7**) .

❑ Lift the rear bench seat base (see **Rear bench seat base: Removal - Refitting**) (MR 365, 76A, Rear seat frames and runners).

❑ Remove the carpet retaining clip.

❑ Move the carpet aside.

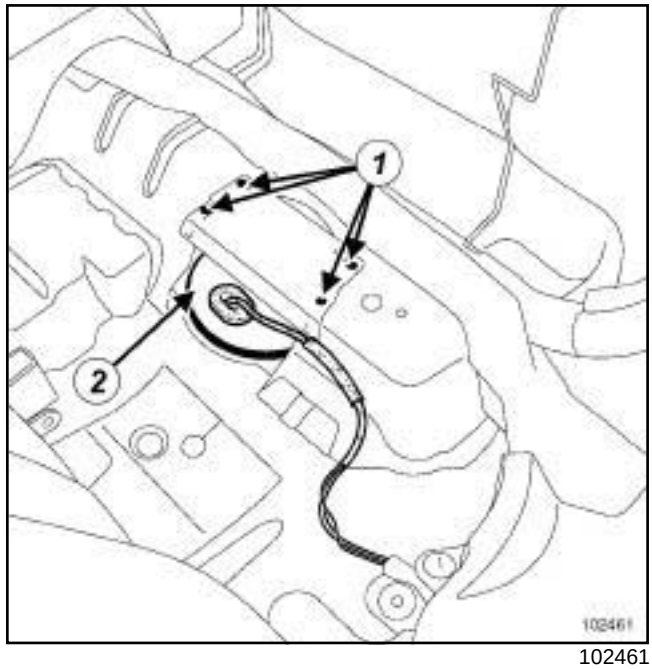

102461

❑ Remove:

- the mounting bolts (**1**) from the closure panel,
- the closure panel,
- the blanking cover (**2**) from the inspection flap.

B84 or C84 or G84 or S84, and F9Q or K9K or M9R

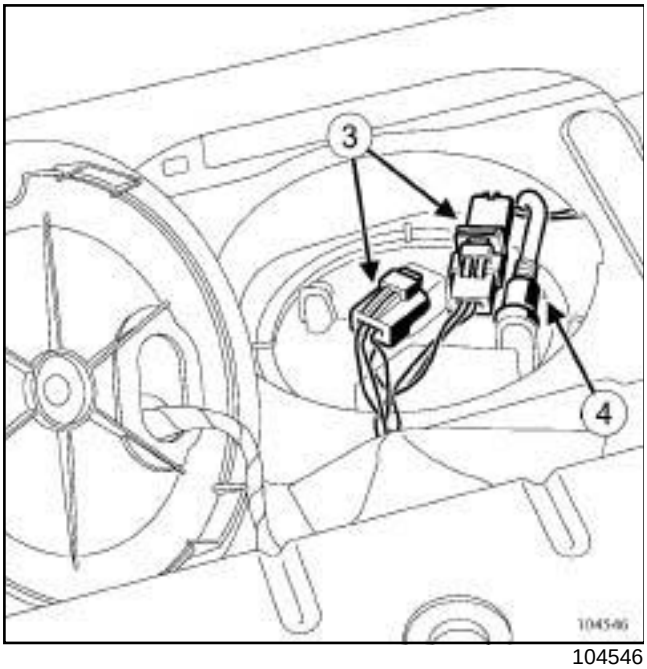

104546

- ❑ Disconnect:
  - electrical connectors (**3**) ,
  - quick-release union(s) (**4**) .
- ❑ Prepare for the fuel outflow.
- ❑ Fit suitable blanking plugs onto the unions (see **13B**, **Diesel injection**, **Diesel injection: Precautions for repair**, page **13B-12**) .

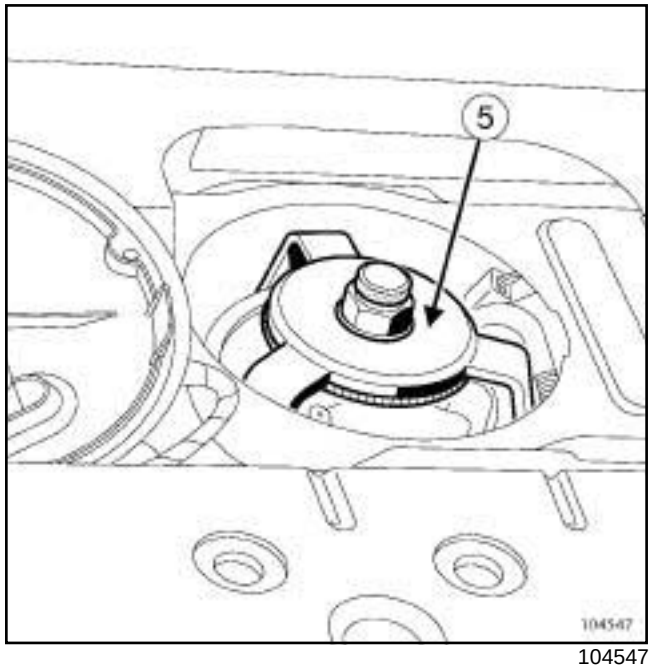

104547

- ❑ Remove the nut from the sender using tool **(Mot. 1397)** (**5**) .
- ❑ Remove the sender, being careful with the float.

WARNING

Refit the sender nut as soon as the sender has been removed to prevent any deformation of the fuel tank.

B84 or C84 or G84 or S84, and F9Q or K9K or M9R

REFITTING

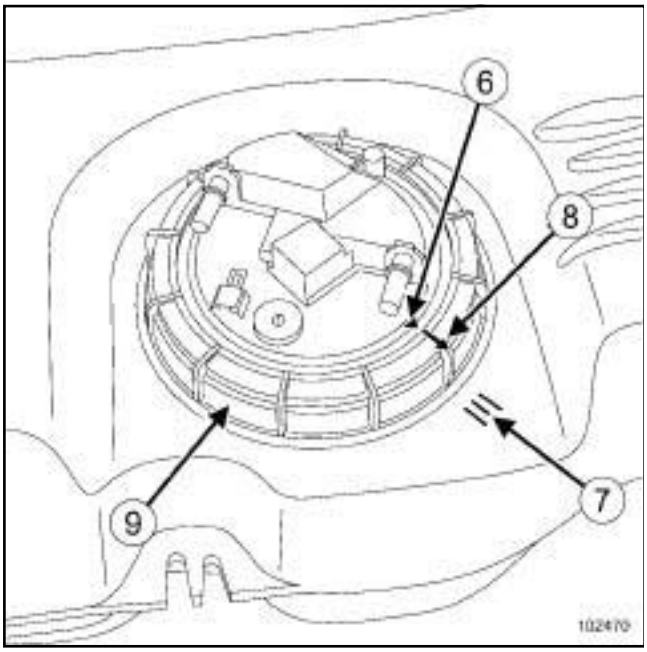

102470

- ❑ Replace the O-ring seal.
- ❑ Refit the sender, aligning the mark (**6**) on the sender with the mark (**7**) on the tank.
- ❑ Position nut (**9**) .
- ❑ Tighten the nut (**9**) until the mark (**8**) on the nut is aligned with the mark (**7**) on the tank and with the mark (**6**) on the sender.
- ❑ Proceed in the reverse order to removal.
- ❑ Connect the battery (see **Battery : Removal - Refitting**) (MR 364, 80A, Battery).
- ❑ Torque tighten the **battery cover mounting bolts (4 Nm)**.

Pump-sender unit-filter: Removal - Refitting

B84 or C84 or G84 or S84, and K4M – B84 or C84 or G84 or S84, and F4R – B84 or C84 or G84 or S84, and K4J

Essential special tooling	
Mot. 1397	Universal petrol tank gauge nut wrench.

Tightening torques ▽	
battery cover mounting bolts	**4 Nm**

IMPORTANT

During this operation, it is essential to:

- refrain from smoking or bringing red hot objects close to the working area,
- beware of fuel splashes when disconnecting the union,
- protect sensitive areas from fuel outflow.

REMOVAL

❑ Disconnect the battery (see **Battery: Removal - Refitting**) (MR 364, 80A, Battery).

❑ Drain the fuel tank (see **19C**, **Tank**, **Fuel tank: Draining**, page **19C-7**) .

❑ Lift the rear bench seat base (see **Rear bench seat base: Removal - Refitting**) (MR 365, 76A, Rear seat frames and runners).

❑ Remove the carpet retaining clip.

❑ Move the carpet aside.

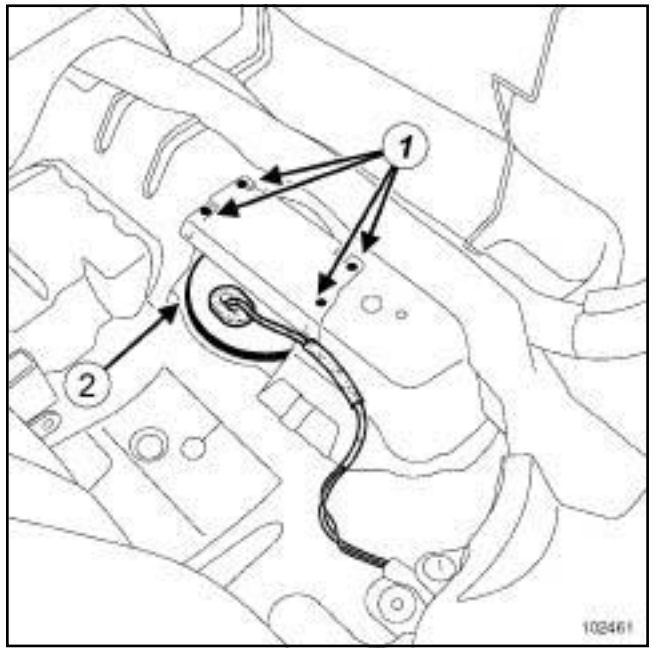

102461

❑ Remove:

- the mounting bolts (**1**) from the closure panel,
- the closure panel,
- the blanking cover (**2**) from the inspection flap.

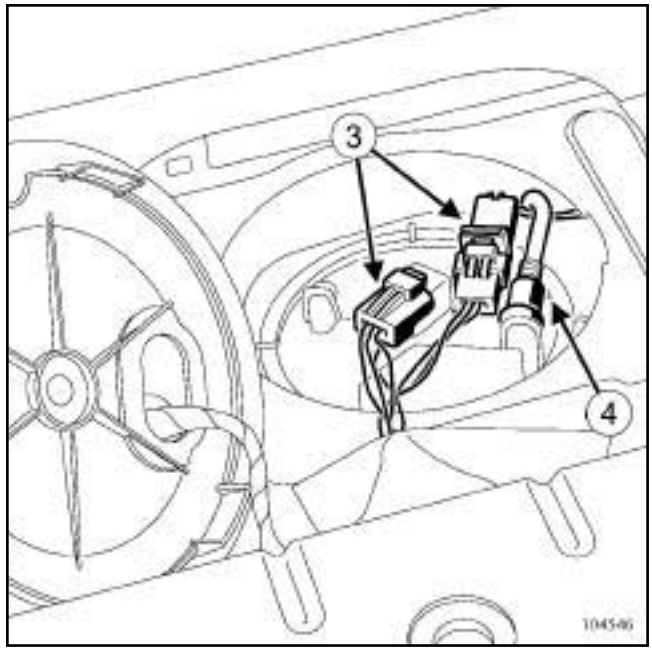

104546

❑ Disconnect:

- electrical connectors (**3**) ,
- quick-release union(s) (**4**) .

❑ Prepare for the fuel outflow.

B84 or C84 or G84 or S84, and K4M – B84 or C84 or G84 or S84, and F4R – B84 or C84 or G84 or S84, and K4J

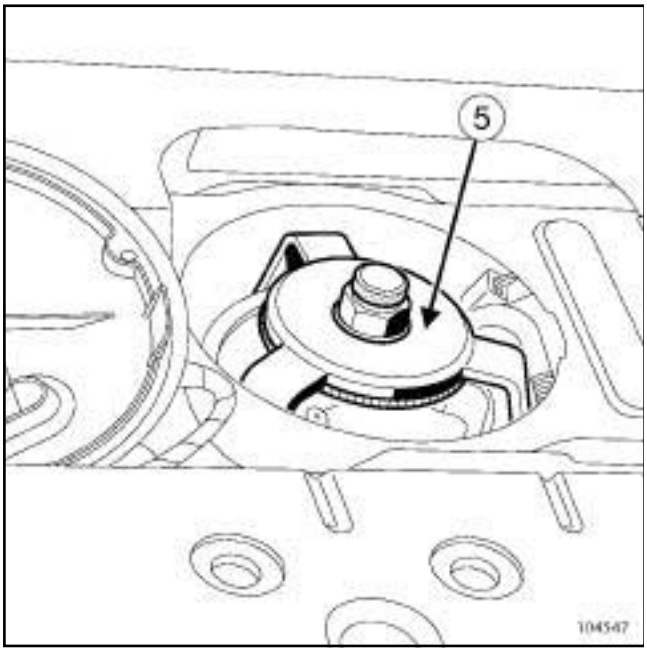

104547

- ❑ Remove the nut from the pump/sender/filter assembly using tool **(Mot. 1397)** (**5**) .
- ❑ Remove the pump/sender/filter assembly, being careful not to damage the float.

> **WARNING**
> Refit the pump/sender/filter assembly nut as soon as the pump/sender/filter assembly has been removed to prevent any deformation of the fuel tank.

REFITTING

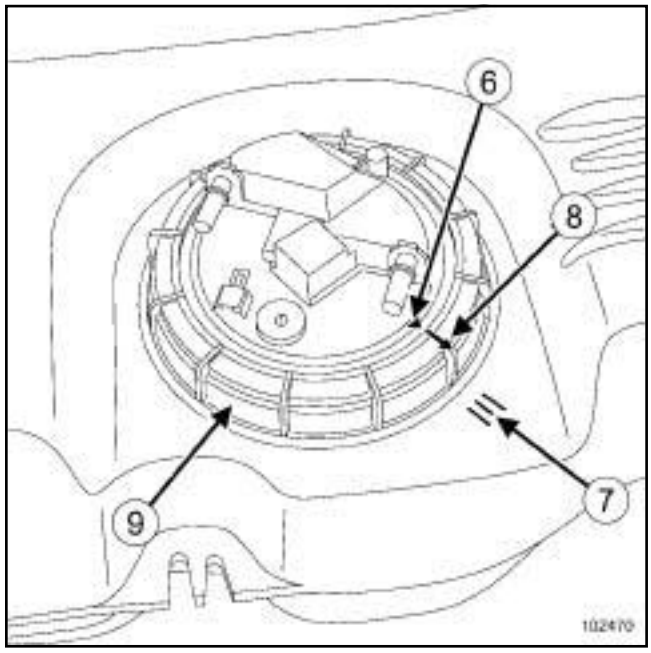

102470

- ❑ Replace the O-ring seal.
- ❑ Refit the pump/sender/filter assembly, aligning mark (**6**) on the pump/sender/filter assembly with mark (**7**) on the tank.
- ❑ Position nut (**9**) .
- ❑ Tighten the nut (**9**) until the mark (**8**) on the nut is aligned with the mark (**7**) on the tank and with the mark (**6**) on the pump-sender-filter assembly.
- ❑ Proceed in the reverse order to removal.
- ❑ Connect the battery (see **Battery : Removal - Refitting**) (MR 364, 80A, Battery).
- ❑ Torque tighten the **battery cover mounting bolts (4 Nm)**.

B84 or C84 or G84 or S84, and F4R or K4J or K4M

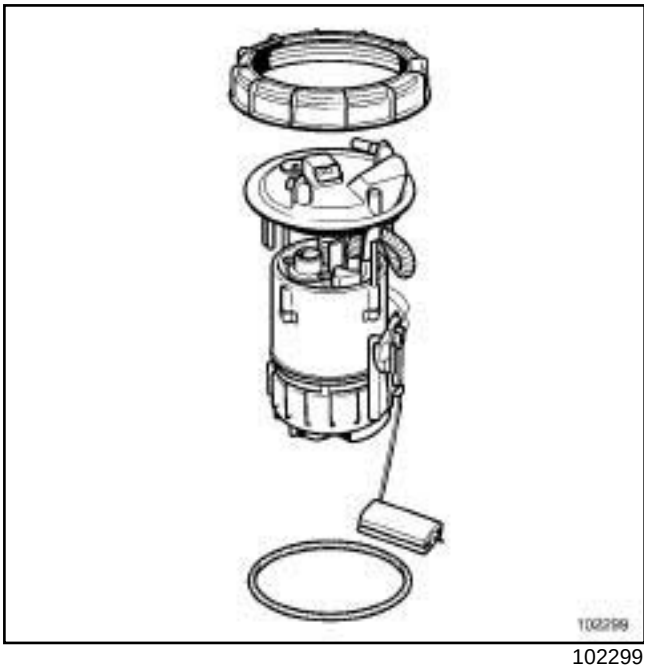

102299

The fuel filter is located in the fuel tank; it is integrated into the « pump-sender-filter » assembly and cannot be removed.

The « pump-sender-filter » assembly must be replaced if one of the components is faulty.

The filter is intended to have a long service life.

Checking the fuel supply pressure and the pump delivery rate is the equivalent of running fault finding on the « pump-sender-filter » assembly.

B84 or C84 or G84 or S84

CHECKING THE SENDER UNIT

Capacity	**Resistance value between terminals A1 and B2 (Ω) ± 10 Ω**	**Height H (mm) ± 6mm**
Tank full	20	upper stop
Tank 3/4 full	95	**150**
Tank 1/2 full	170	**111**
Tank 1/4 full	245	**72**
Spare	290	**40**
Tank empty	320	lower stop

❑ **MEASURING HEIGHT H**

❑ Place the removed sender on a flat surface.

H is the height measured between the float pin and the working plane.

Note:

All these values are given as a guide.

K84 or L84, and K4M, and 768

IMPORTANT

During this operation, be sure to:

- refrain from smoking or bringing red hot objects close to the working area,
- be careful of fuel splashes when disconnecting the union.

WARNING

To avoid any corrosion or damage, protect the areas on which fuel is likely to run.

Note:

The additional fuel system tank has a capacity of 0.66 L.

REMOVAL

I - REMOVAL PREPARATION OPERATION

❑ Lift the bonnet. The additional fuel system tank is located on the left-hand section of the scuttle panel grille.

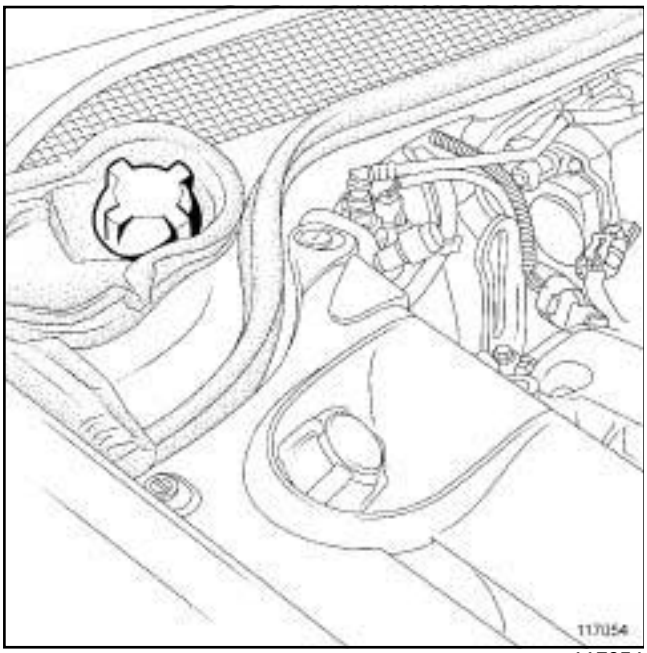

117054

❑ Disconnect the battery (see **Battery: Removal - Refitting**) (MR 364, 80A, Battery).

❑ Remove the scuttle panel grille (see **Scuttle panel grille: Removal - Refitting**) (MR 365, 56A, Exterior equipment).

II - OPERATION FOR REMOVAL OF PART CONCERNED

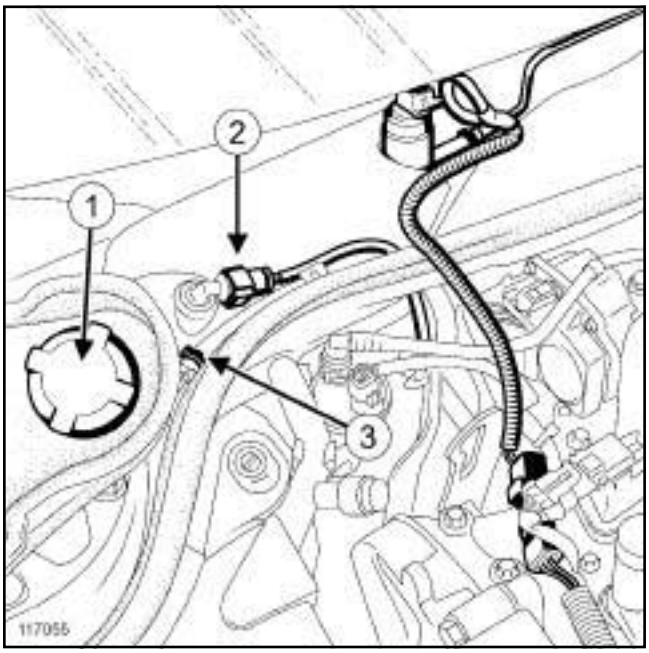

117055

❑ Remove the cap from the additional fuel system (**1**) .

K84 or L84, and K4M, and 768

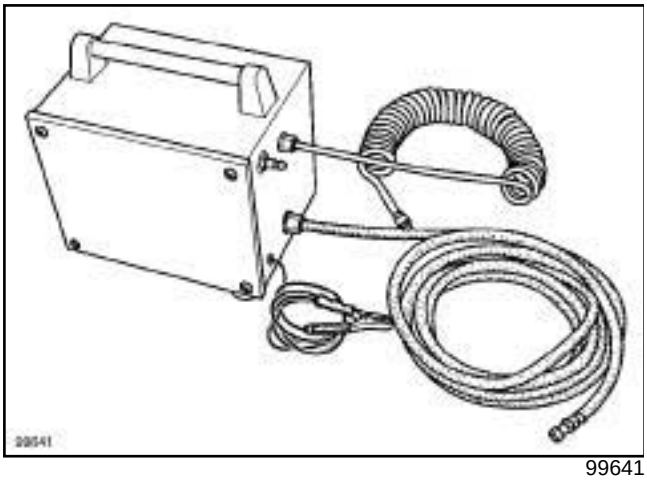

99641

❑ Drain by siphoning the fuel via the additional fuel system tank filler neck ***(1)*** using the pneumatic siphoning pump.

❑ Remove:

- the fuel pump to the additional fuel system tank (see **19C**, **Tank**, **Additional fuel circuit petrol pump: Removal - Refitting**, page **19C-24**) ,
- the bolts from the additional fuel system tank.

❑ Unclip the quick-release union ***(2)*** .

❑ Loosen the clip ***(3)*** from the additional fuel system tank pipe.

❑ Disconnect the additional fuel system tank pipe.

❑ Remove the additional fuel system tank.

REFITTING

I - REFITTING PREPARATIONS OPERATION

❑ Always replace the additional fuel system fuel pump seal.

II - REFITTING OPERATION FOR PART CONCERNED

❑ Refit:

- the additional fuel system tank,
- the bolts from the additional fuel system tank.

❑ Connect the additional fuel system tank pipe.

❑ Tighten the clip on the additional fuel system tank pipe.

❑ Clip on the quick-release union.

❑ Refit:

- the fuel pump to the additional fuel system tank (see **19C**, **Tank**, **Additional fuel circuit petrol pump: Removal - Refitting**, page **19C-24**) ,
- the additional fuel system cap.

III - FINAL OPERATION.

❑ Refit the scuttle panel grille (see **Scuttle panel grille: Removal - Refitting**) (MR 365, 56A, Exterior equipment).

❑ Connect the battery (see **Battery : Removal - Refitting**) (MR 364, 80A, Battery).

K84 or L84, and K4M, and 768

IMPORTANT

During this operation, be sure to:

- refrain from smoking or bringing red hot objects close to the working area,
- be careful of fuel splashes when disconnecting the union.

WARNING

To avoid any corrosion or damage, protect the areas on which fuel is likely to run.

REMOVAL

I - REMOVAL PREPARATION OPERATION

❑ Disconnect the battery (see **Battery: Removal - Refitting**) (MR 364, 80A, Battery).

❑ Remove the scuttle panel grille (see **Scuttle panel grille: Removal - Refitting**) (MR 365, 56A, Exterior equipment).

II - OPERATION FOR REMOVAL OF PART CONCERNED

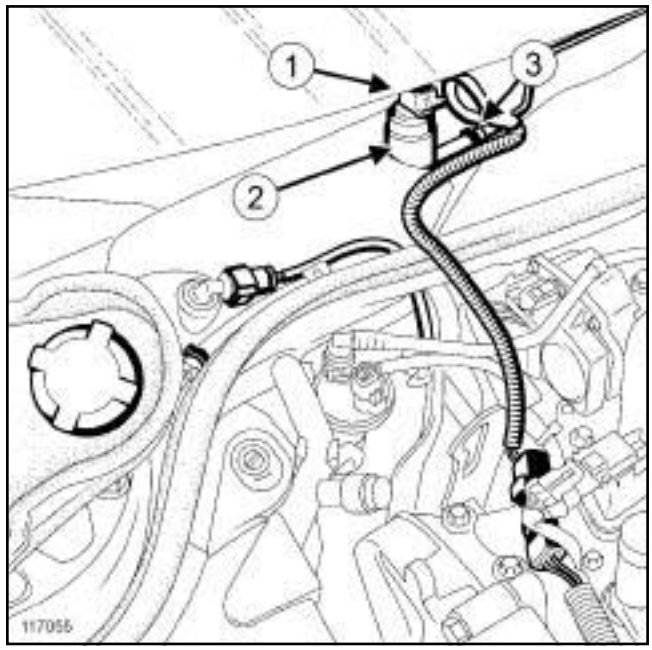

117055

❑ Disconnect the connector (**1**) from the additional fuel system fuel pump.

❑ Unclip the additional fuel system fuel pump (**2**) from the additional fuel system tank.

❑ Loosen the fuel pipe clip (**3**) on the additional fuel system fuel pump.

❑ Disconnect the fuel pipe from the additional fuel system fuel pump.

REFITTING

I - REFITTING PREPARATIONS OPERATION

❑ Always replace:

- the clip for the fuel pipe on the additional fuel system fuel pump.
- the additional fuel system fuel pump seal.

II - REFITTING OPERATION FOR PART CONCERNED

❑ Connect the fuel pipe to the additional fuel system fuel pump.

❑ Tighten the new fuel pipe clip on the additional fuel system fuel pump.

❑ Clip the additional fuel system fuel pump onto the additional fuel system tank.

❑ Connect the additional fuel system fuel pump connector.

K84 or L84, and K4M, and 768

III - FINAL OPERATION.

- ❑ Refit the scuttle panel grille (see **Scuttle panel grille: Removal - Refitting**) (MR 365, 56A, Exterior equipment).
- ❑ Connect the battery (see **Battery : Removal - Refitting**) (MR 364, 80A, Battery).

B84 or C84 or G84 or S84, and K4J, and 730 or 732 – B84 or C84 or G84 or S84, and K4M, and 760, and JR5

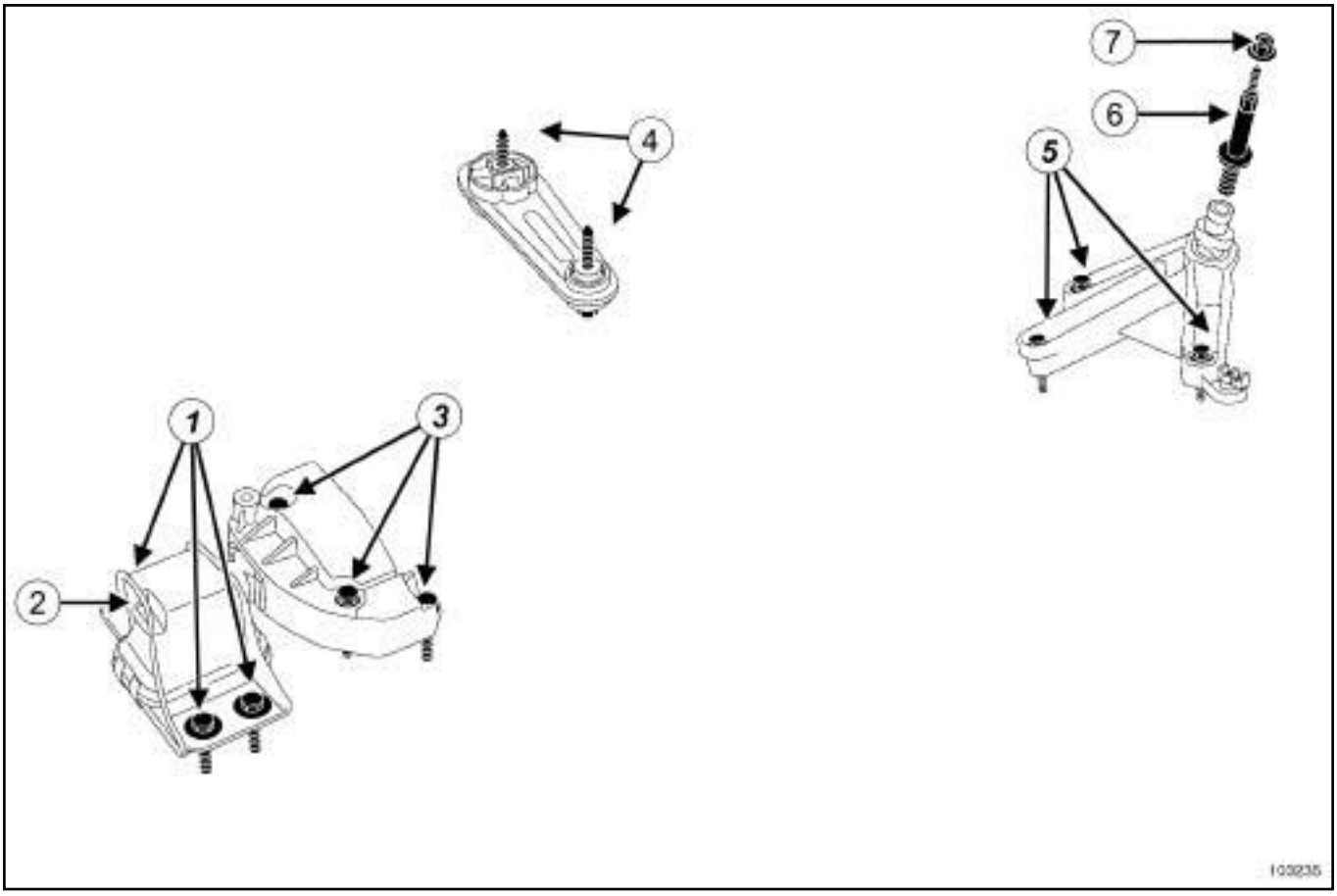

103235

Tightening torques (in Nm)

(1)	**62**
(2)	**105**
(3)	**62**
(4)	**105**
(5)	**62**
(6)	**180**
(7)	**62**

B84 or C84 or G84 or S84, and K4M, and 761

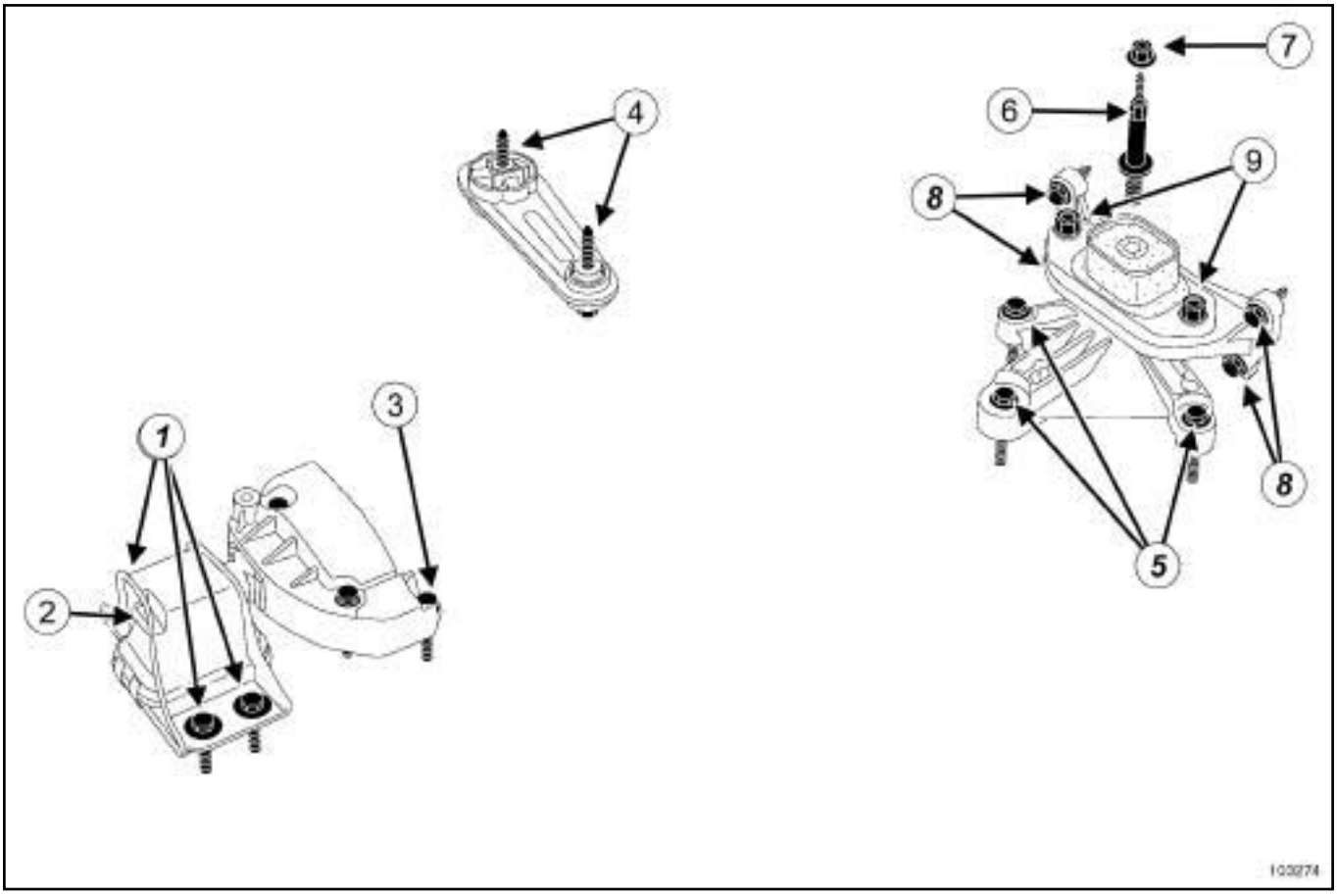

103274

Tightening torques (in Nm)

(**1**)	**62**
(**2**)	**105**
(**3**)	**62**
(**4**)	**105**
(**5**)	**62**
(**6**)	**180**
(**7**)	**62**
(**8**)	**21** for M8 bolts **62** for M10 bolts
(**9**)	**62**

Suspended engine mounting: Tightening torque

B84 or C84 or G84 or S84, and K9K, and 732

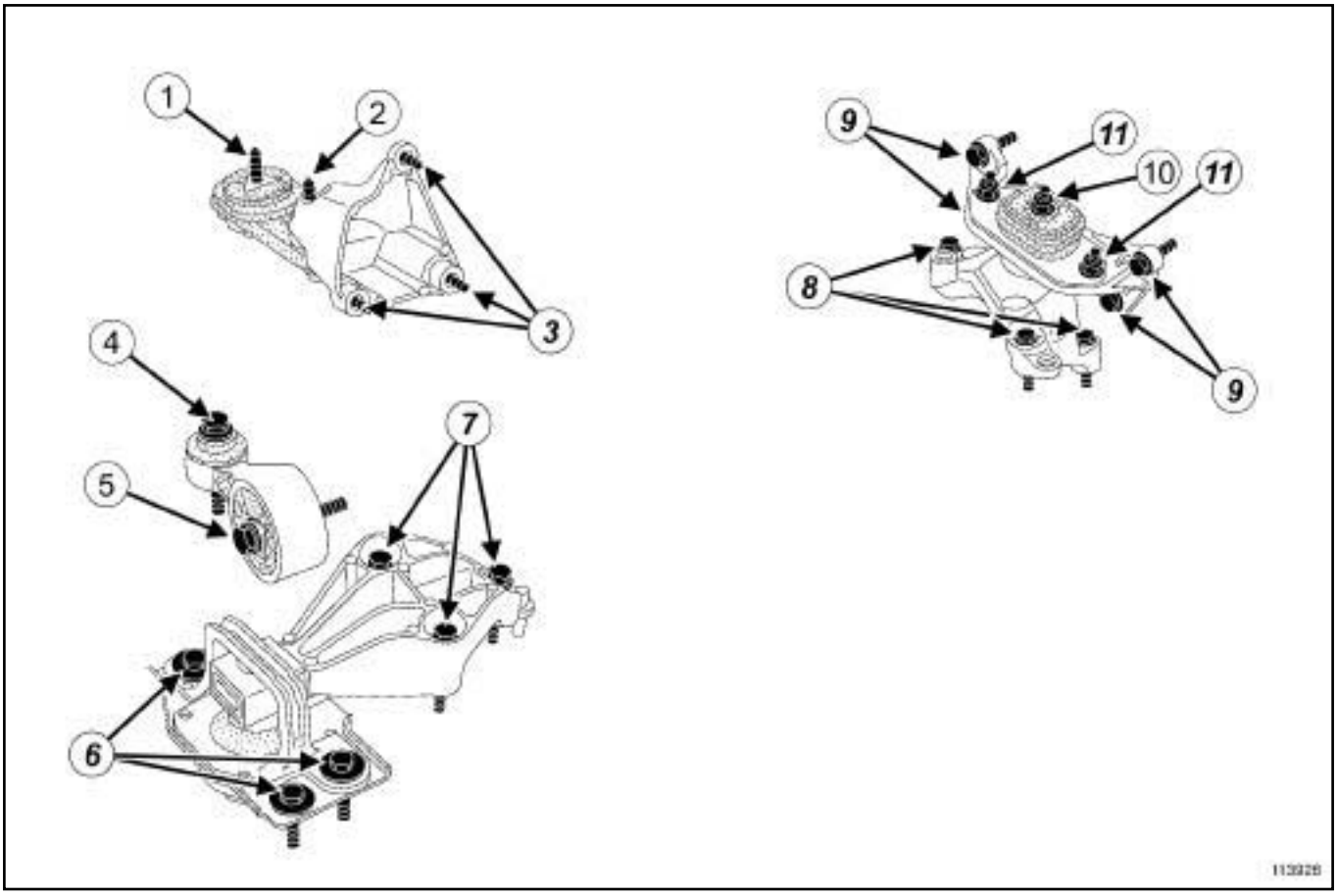

113926

No.	Description	Tightening torque (Nm)
(**1**)	Bolt mounting the lower engine tie-bar on the sub-frame	**105**
(**2**)	Bolt mounting the lower engine tie-bar onto its support	**180**
(**3**)	Bolt mounting the lower engine tie-bar onto its support	**62**
(**4**)	Bolt mounting the upper engine tie-bar onto the bodywork	**105**
(**5**)	Bolt mounting the upper engine tie-bar onto the engine	**115**
(**6**)	Bolt mounting the right-hand suspended mounting support on the body	**62**
(**7**)	Bolt mounting the right-hand suspended mounting support on the engine	**62**
(**8**)	Bolt mounting the left-hand suspended mounting support onto the gearbox	**62**
(**9**)	Bolt mounting the left-hand suspended mounting support on the body	**62**
(**10**)	Left-hand rubber pad mounting nut on the gearbox mounting	**62**
(**11**)	Left-hand rubber pad mounting bolts on the body mounting	**105**

Suspended engine mounting: Tightening torque

B84 or C84, and F4R, and 774

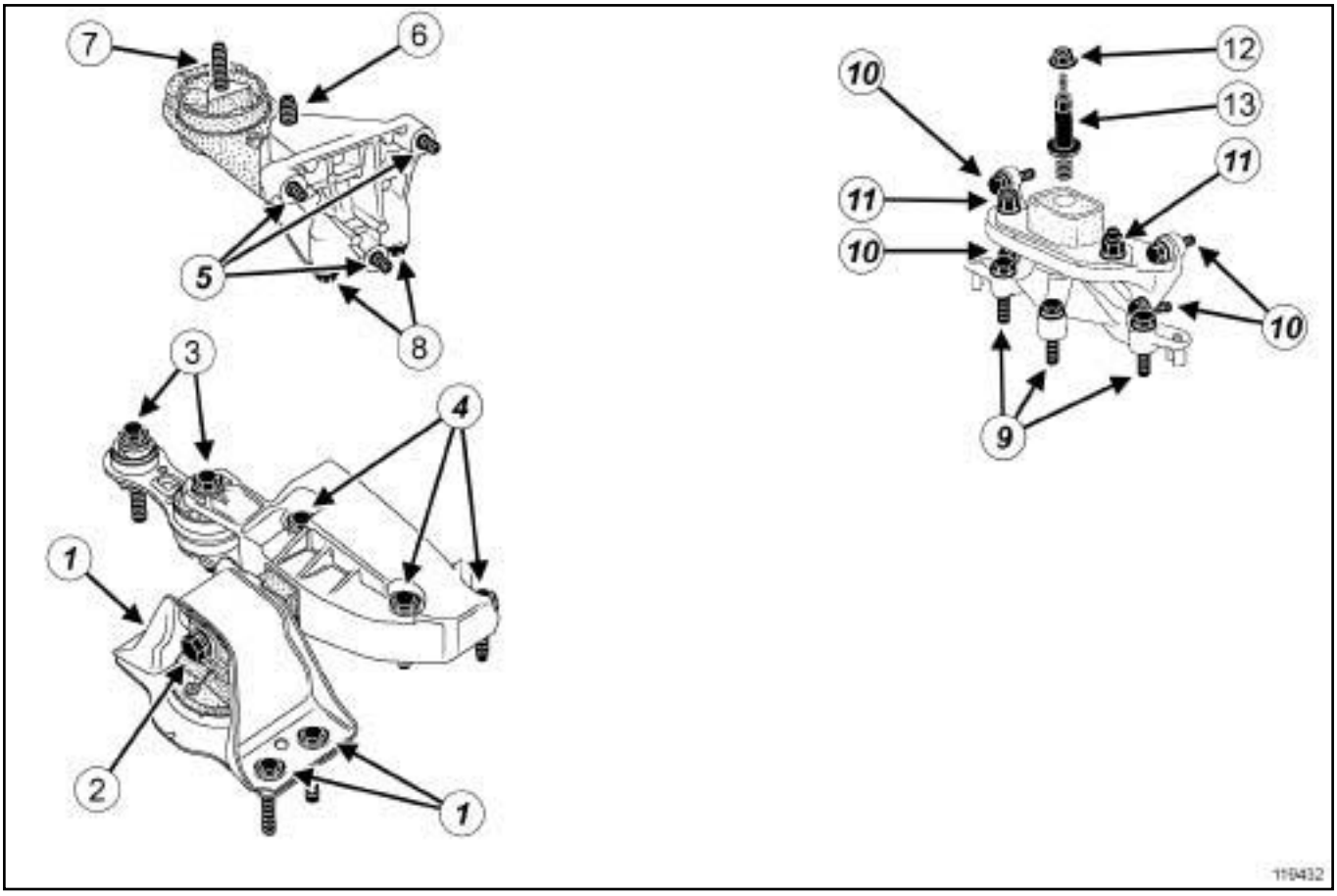

119432

No.	Description	Tightening torque (Nm)
(**1**)	Right-hand suspended mounting support bolt on the body	**62**
(**2**)	Right-hand rubber pad bolt	**105**
(**3**)	Upper engine tie-bar bolt	**105**
(**4**)	Right-hand suspended mounting support bolt on the engine	**62**
(**5**)	Lower engine tie-bar support bolt	**62**
(**6**)	Lower engine tie-bar bolt on its support	**180**
(**7**)	Lower engine tie-bar on the subframe	**105**
(**8**)	Lower engine tie-bar bolt on its support	**62**
(**9**)	Left hand suspended mounting bolt on the gearbox	**62**
(**10**)	Left-hand suspended mounting support bolt on the body	**21**
(**11**)	Left-hand rubber pad bolt on the body mounting	**105**

Suspended engine mounting: Tightening torque

B84 or C84, and F4R, and 774

No.	Description	Tightening torque (Nm)
(**12**)	Left-hand rubber pad nut on the gearbox mounting	**62**
(**13**)	Left-hand suspended mounting shaft	**180**

Suspended engine mounting: Tightening torque

B84 or C84 or G84 or S84, and K9K, and 722 or 728

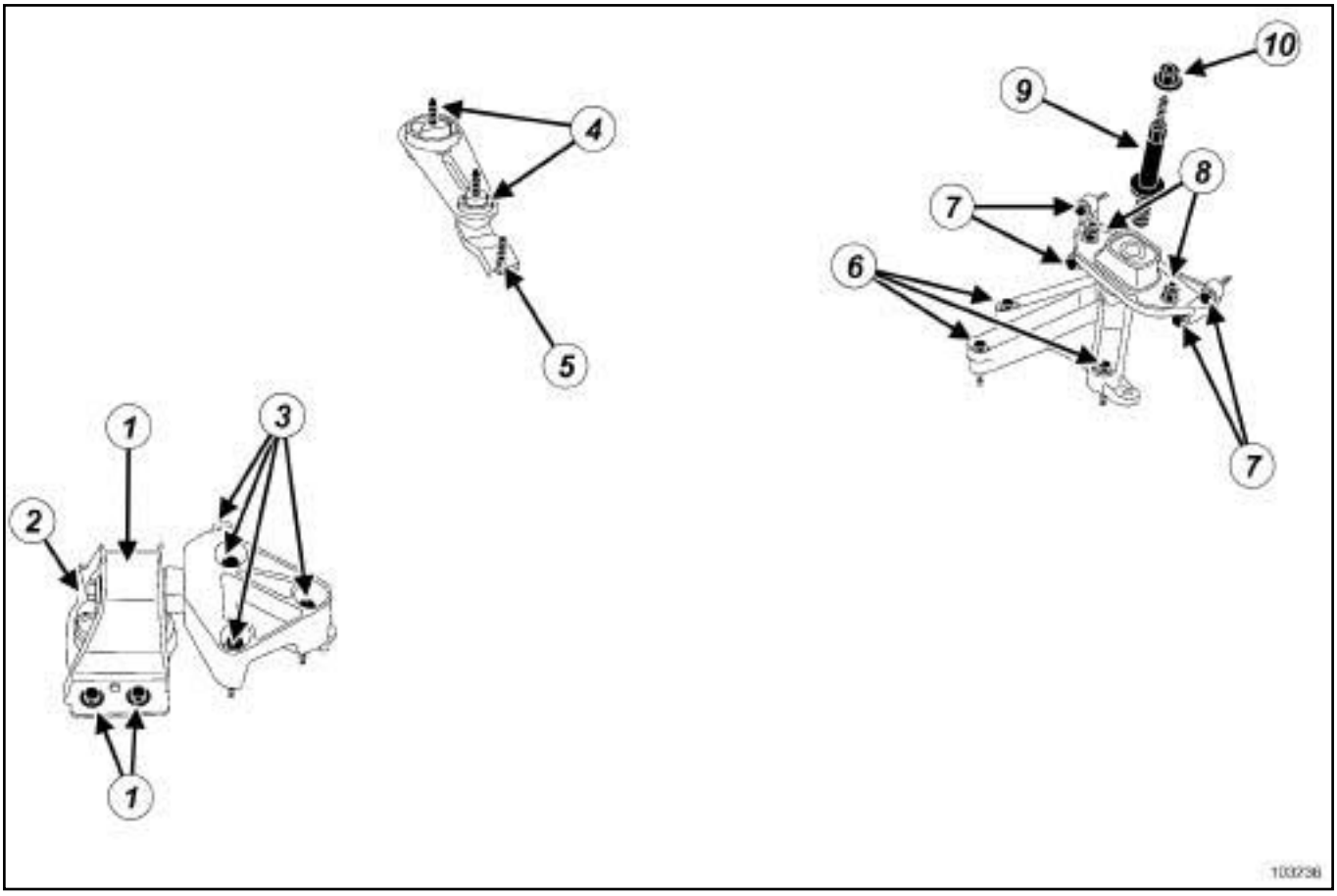

103236

Tightening torques (in Nm)

(1)	62
(2)	105
(3)	62
(4)	105
(5)	62
(6)	62
(7)	21
(8)	62
(9)	180
(10)	62

Suspended engine mounting: Tightening torque

B84 or C84 or G84 or S84, and F9Q, and 800 or 804 or 808

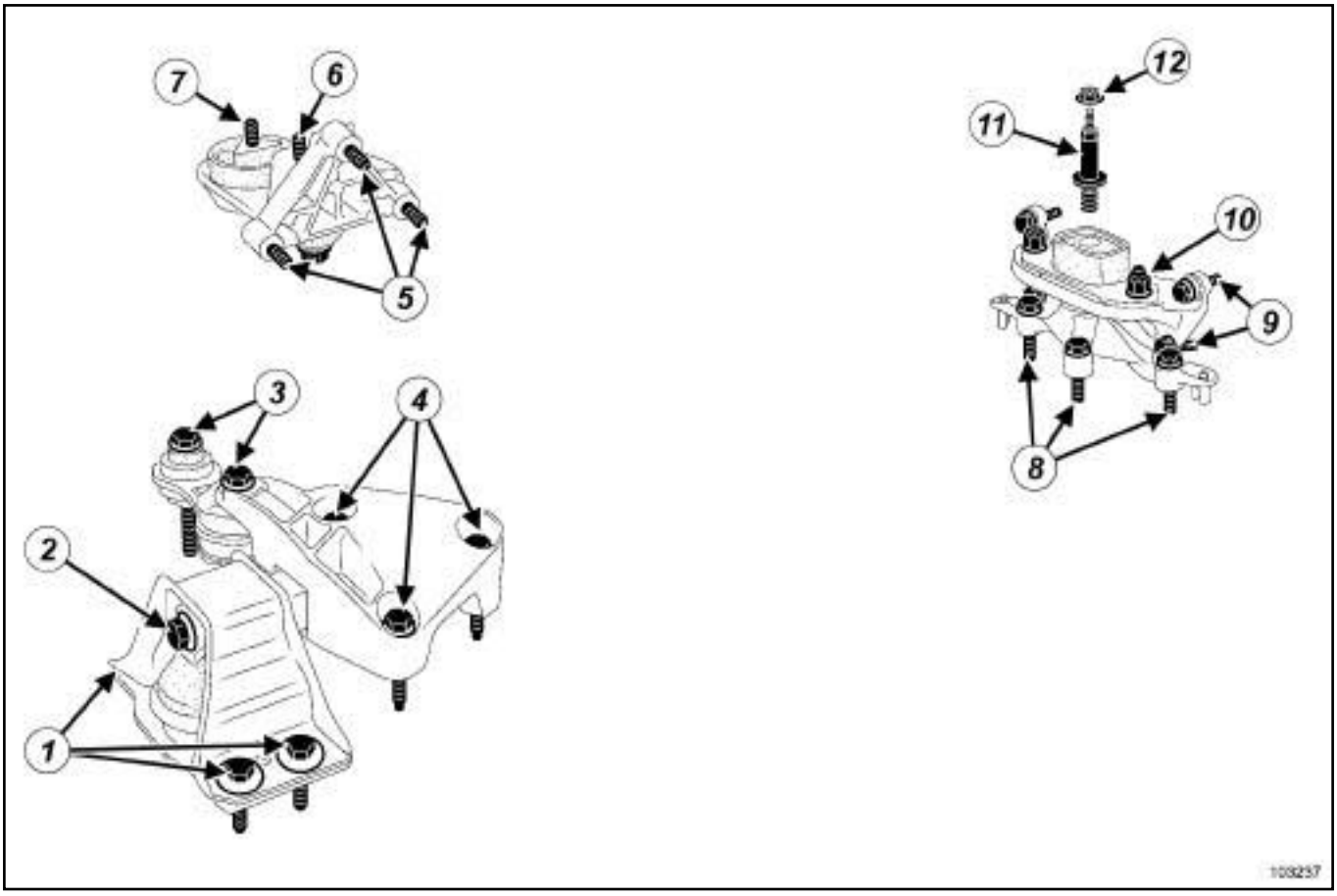

103237

Tightening torques (in Nm)

(**1**)	**62**
(**2**)	**105**
(**3**)	**105**
(**4**)	**62**
(**5**)	**62**
(**6**)	**180**
(**7**)	**105**
(**8**)	**62**
(**9**)	**21** for M8 bolts **62** for M10 bolts
(**10**)	**62**
(**11**)	**180**
(**12**)	**62**

Suspended engine mounting: Tightening torque

B84 or C84 or G84 or S84, and F4R, and 771

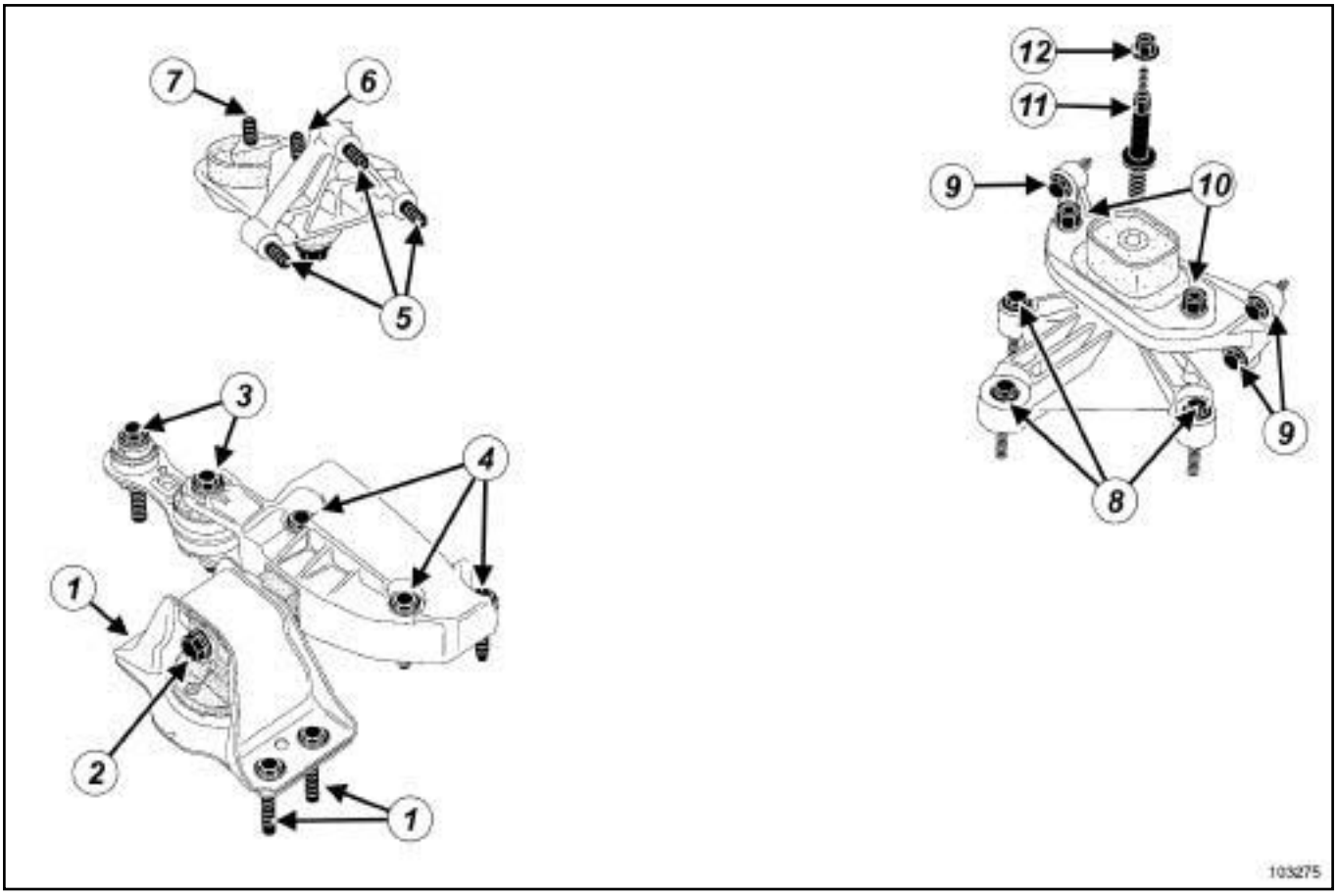

103275

Tightening torques (in Nm)

(**1**)	**62**
(**2**)	**105**
(**3**)	**105**
(**4**)	**62**
(**5**)	**62**
(**6**)	**180**
(**7**)	**105**
(**8**)	**62**
(**9**)	**21** for M8 bolts **62** for M10 bolts
(**10**)	**62**
(**11**)	**180**
(**12**)	**62**

Suspended engine mounting: Tightening torque

B84 or C84 or G84 or S84, and K9K, and 729, and DP0

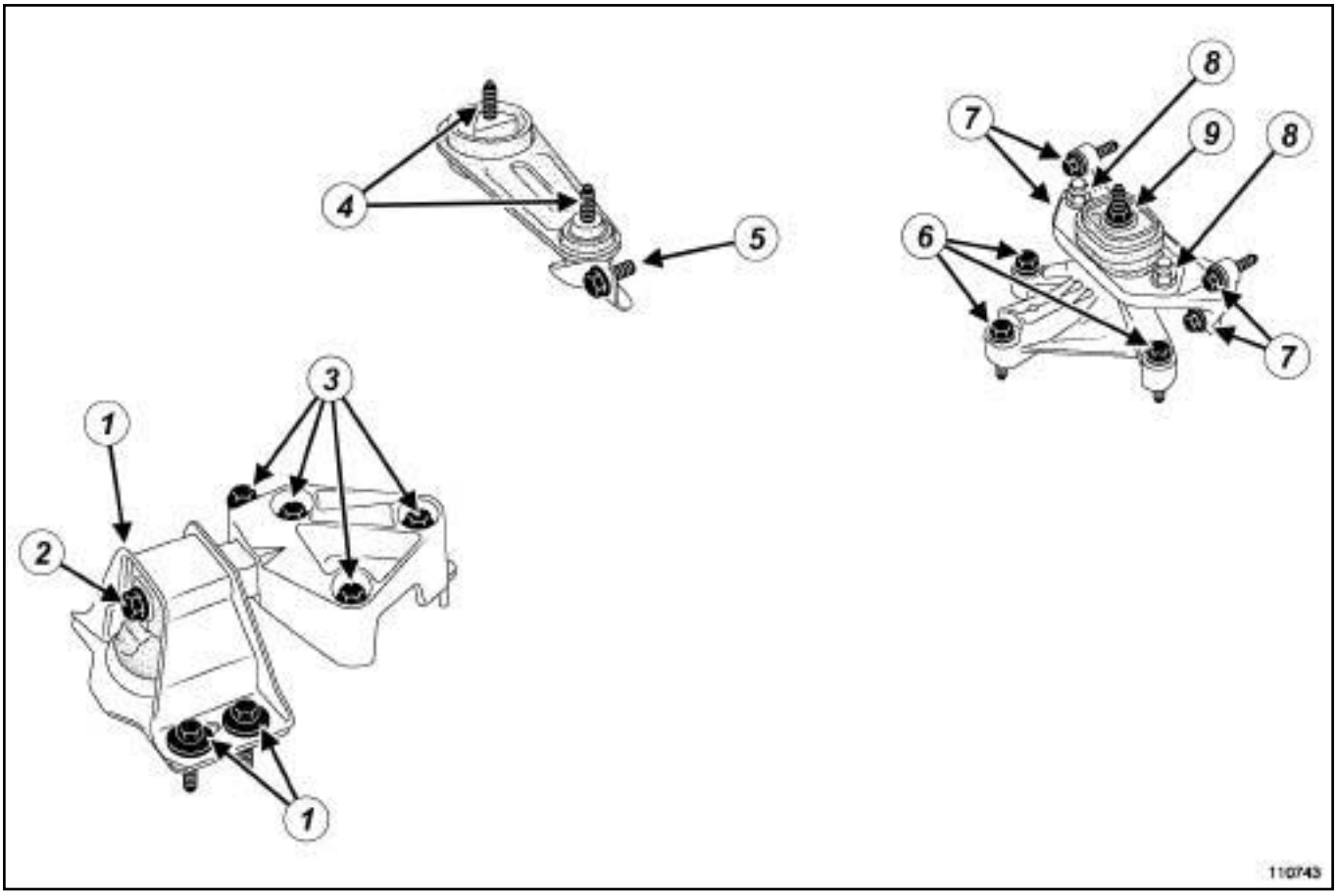

110743

Tightening torques (in Nm)

(1)	62
(2)	105
(3)	62
(4)	105
(5)	62
(6)	62
(7)	62
(8)	62
(9)	62

Suspended engine mounting: Tightening torque

B84 or C84 or G84 or S84, and K9K, and 732

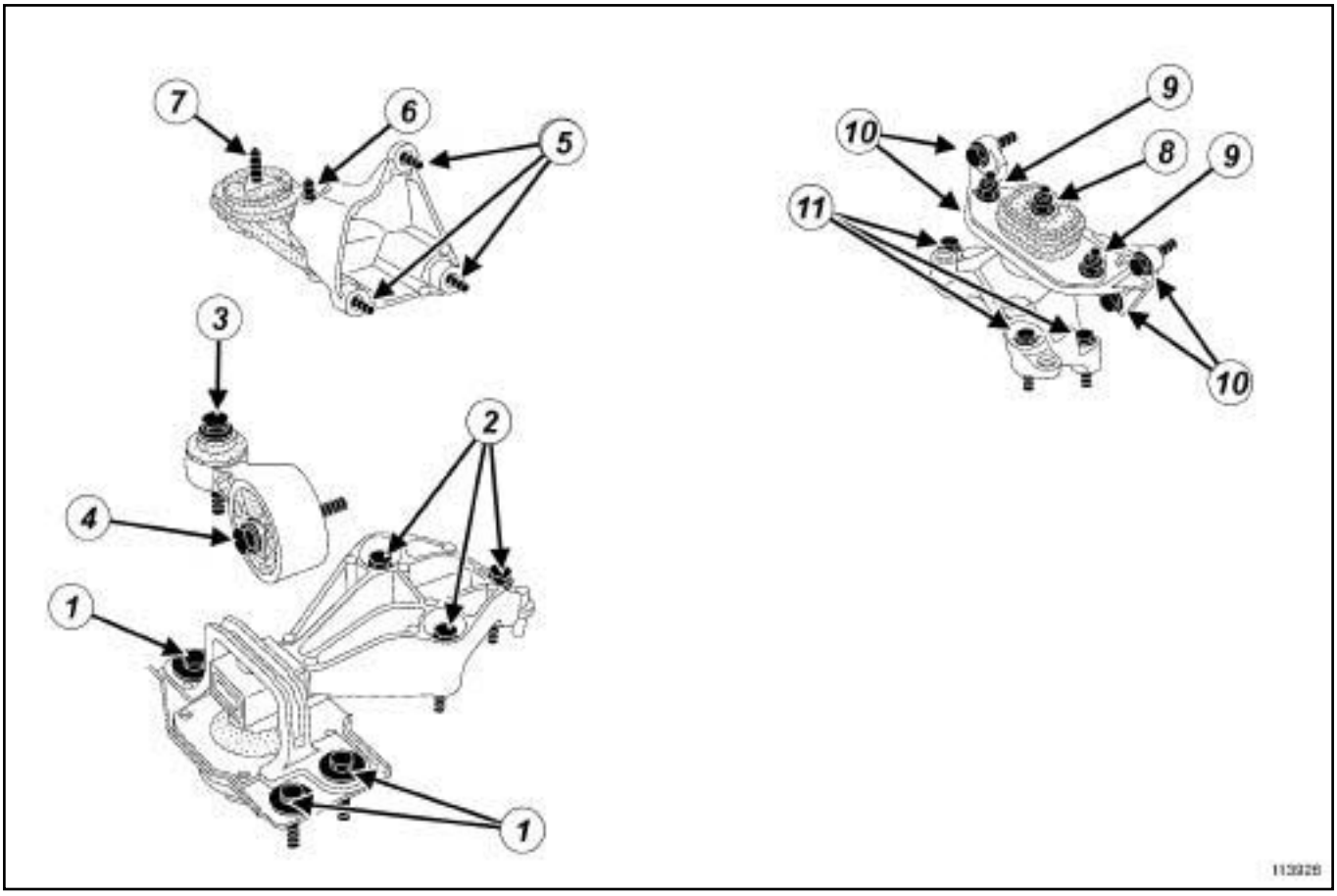

113926

Tightening torques (in Nm)

(1)	62
(2)	62
(3)	105
(4)	115
(5)	62
(6)	180
(7)	105
(8)	62
(9)	105
(10)	62
(11)	62

Suspended engine mounting: Tightening torque

B84 or C84 or G84 or S84, and F4R, and 770 or 776

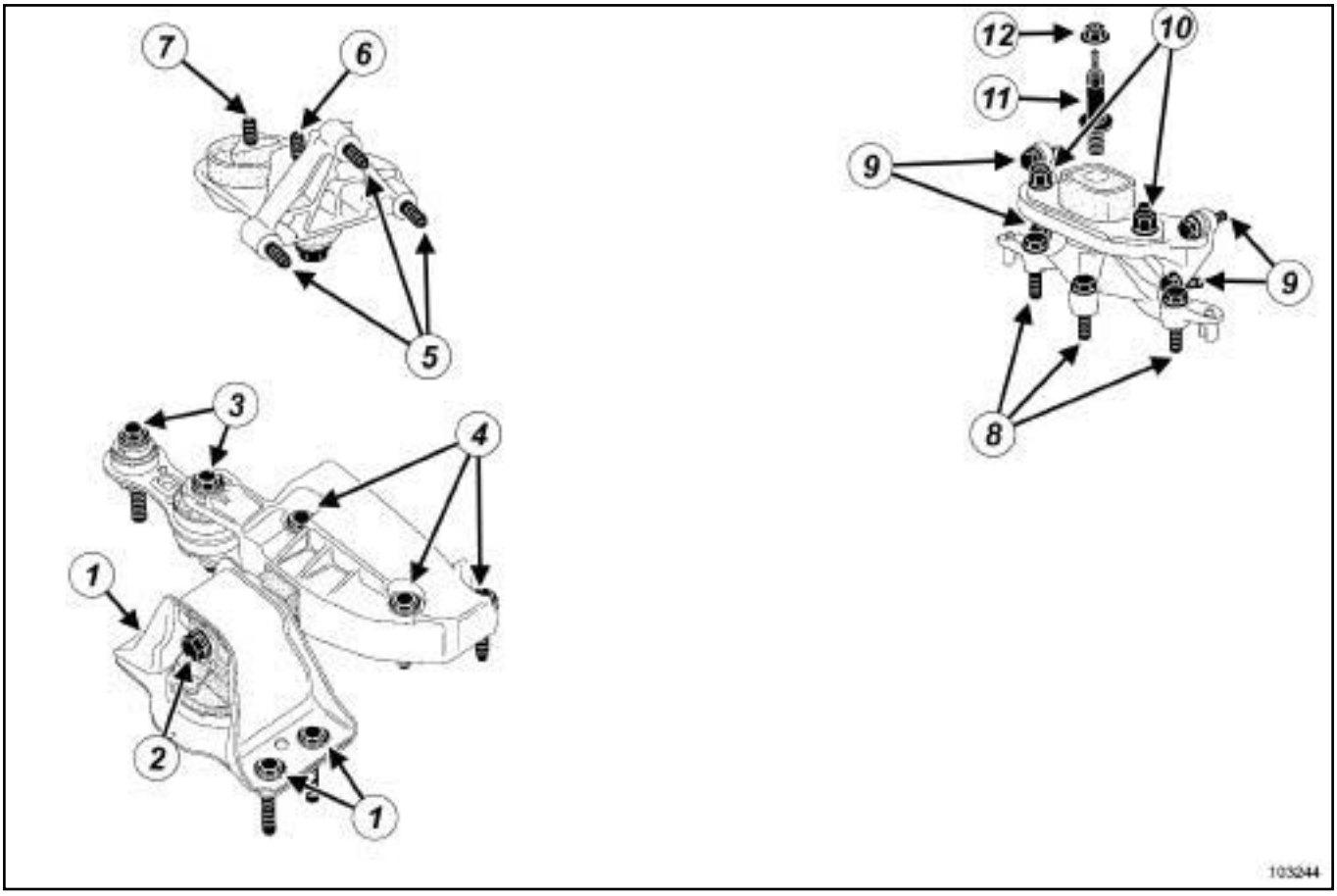

103244

Tightening torques (in Nm)

(**1**)	**62**
(**2**)	**105**
(**3**)	**105**
(**4**)	**62**
(**5**)	**62**
(**6**)	**180**
(**7**)	**105**
(**8**)	**62**
(**9**)	**21** for M8 bolts **62** for M10 bolts
(**10**)	**62**
(**11**)	**180**
(**12**)	**62**

B84 or C84 or G84 or S84, and K9K, and 732

Essential special tooling	
Mot. 1453	Multiple-adjusting engine mounting support with retaining straps.

Tightening torques ▽	
left-hand suspended mounting bolts on the gearbox	**62 Nm**
left-hand suspended mounting bolts on the body	**62 Nm**
left-hand rubber pad mounting bolts on the body mounting	**105 Nm**
left-hand rubber pad mounting nut on the gearbox mounting	**62 Nm**

REMOVAL

I - REMOVAL PREPARATION OPERATION

❑ Position the vehicle on a two-post lift (see **Vehicle: Towing and lifting**) (MR 364, 02A, Lifting equipment).

❑ Remove:

- the engine undertray,
- the scuttle panel grille (see **Scuttle panel grille: Removal - Refitting**) (MR 365, 56A, Exterior equipment),
- the battery (see **Battery: Removal - Refitting**) (MR 364, 80A, Battery).

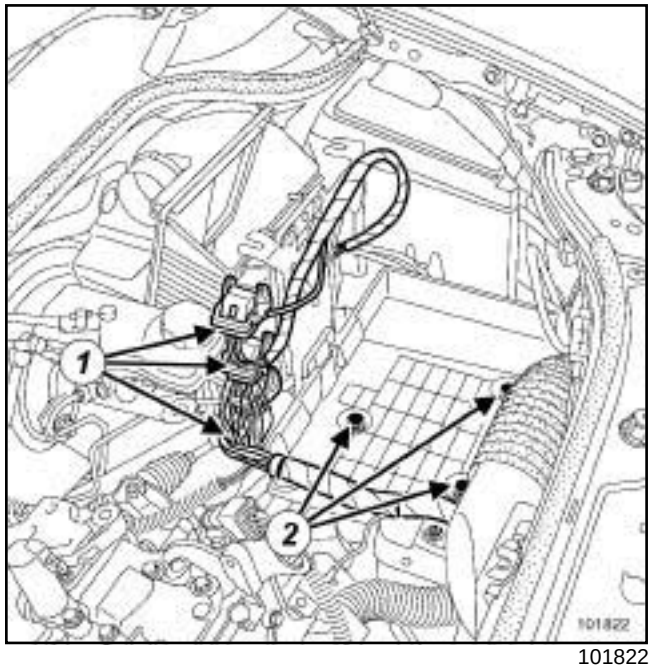

101822

❑ Disconnect the engine management computer connectors (**1**) .

❑ Unclip:

- the wiring harness to the battery negative terminal,
- the wiring harness from the battery tray.

❑ Remove:

- the battery tray mounting bolts (**2**) ,
- the battery tray with the computer and its support.

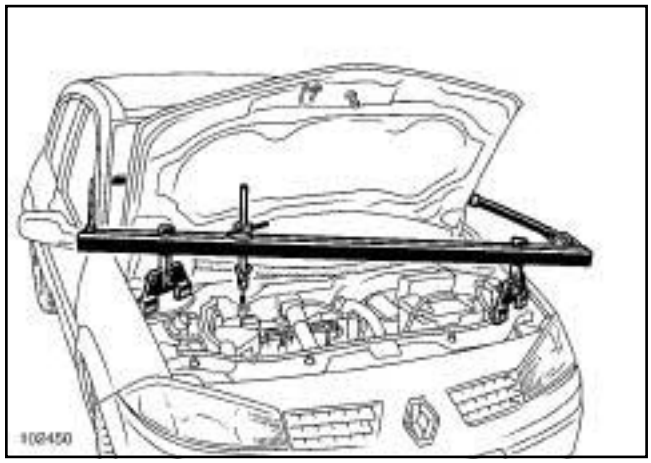

102450

❑ Position tool **(Mot. 1453)**.

❑ Mark the position of the suspended engine mounting on the body.

B84 or C84 or G84 or S84, and K9K, and 732

II - OPERATION FOR REMOVAL OF PART CONCERNED

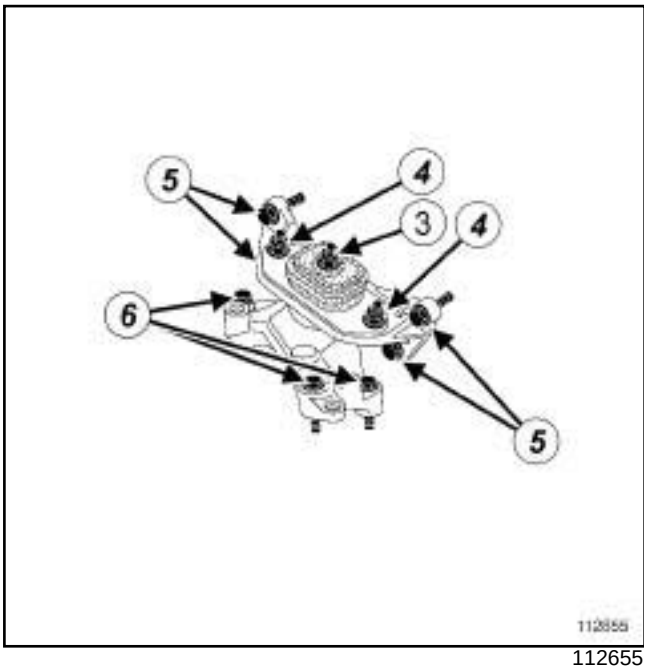

112655

❑ Remove:

- the left-hand rubber pad mounting nut (**3**) from the gearbox mounting,
- the left-hand rubber pad mounting bolts (**4**) from the body mounting,
- the rubber pad,
- the left-hand suspended mounting bolts (**5**) from the body,
- the left-hand suspended mounting on the body,
- the bolts (**6**) mounting the left-hand suspended mounting on the gearbox,
- the gearbox left-hand suspended mounting.

REFITTING

I - REFITTING OPERATION FOR PART CONCERNED

❑ Refit the gearbox left-hand suspended mounting.

❑ Refit the bolts mounting the left-hand suspended mounting on the gearbox.

❑ Torque tighten the **left-hand suspended mounting bolts on the gearbox (62 Nm)**.

❑ Refit the left-hand suspended mounting on the body.

❑ Refit the bolts mounting the left-hand suspended mounting on the body,

❑ Torque tighten the **left-hand suspended mounting bolts on the body (62 Nm)**.

❑ Refit the left-hand rubber pad.

❑ Refit the left-hand rubber pad mounting nut onto the gearbox mounting and the left-hand rubber pad mounting bolts onto the body mounting.

❑ Torque tighten:

- the **left-hand rubber pad mounting bolts on the body mounting (105 Nm)**,
- the **left-hand rubber pad mounting nut on the gearbox mounting (62 Nm)**.

II - FINAL OPERATION.

❑ Remove the **(Mot. 1453)**.

❑ Refit:

- the battery tray with the engine management computer and its support,
- the battery tray mounting bolts.

❑ Clip:

- the wiring harness to the battery negative terminal,
- the wiring harness onto the battery tray.

❑ Connect the engine management computer connectors.

❑ Refit:

- the scuttle panel grille (see **Scuttle panel grille: Removal - Refitting**) (MR 365, 56A, Exterior equipment),
- the engine undertray,

❑ Connect the battery (see **Battery : Removal - Refitting**) (MR 364, 80A, Battery).

M9R

Essential special tooling	
Mot. 1390	Support for removing/refitting the engine - gearbox assembly.

Essential equipment
indelible pencil

Tightening torques ▽	
bolts of the suspended engine mounting support on the body	**62 N.m**
nuts of the suspended engine mounting rubber pad	**62 N.m**
bolts of the suspended engine mounting support on the gearbox	**105 N.m**
nut of the suspended engine mounting rubber pad shaft	**62 N.m**
front end panel upper bolts	**21 N.m**
front end panel lower bolts	**44 N.m**

REMOVAL

I - REMOVAL PREPARATION OPERATION

❑ Position the vehicle on a two-post lift (see **Vehicle: Towing and lifting**) (02A, Lifting equipment).

❑ Remove:

- the engine protector,
- the battery (see **Battery: Removal - Refitting**) (80A, Battery),
- the front bumper (see **Front bumper: Removal - Refitting**) (55A, Exterior protection).

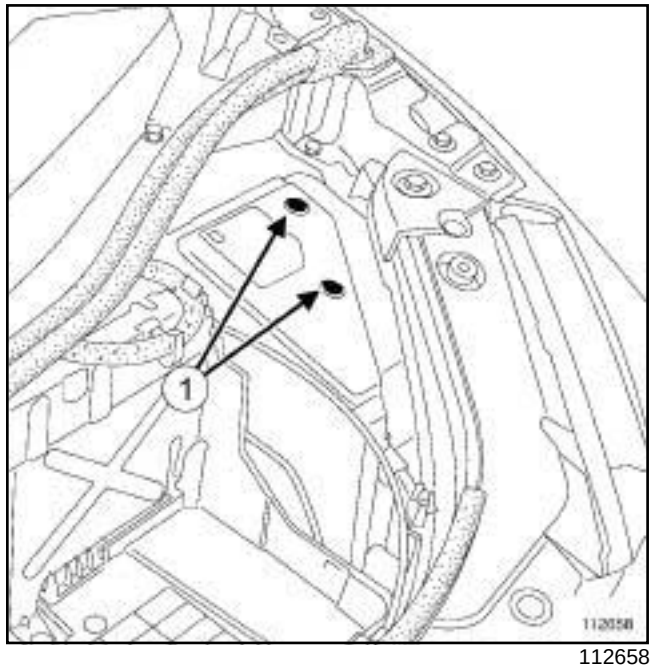

112658

❑ Remove:

- the engine accessories unit cover bolts (**1**) ,
- the engine accessories unit cover.

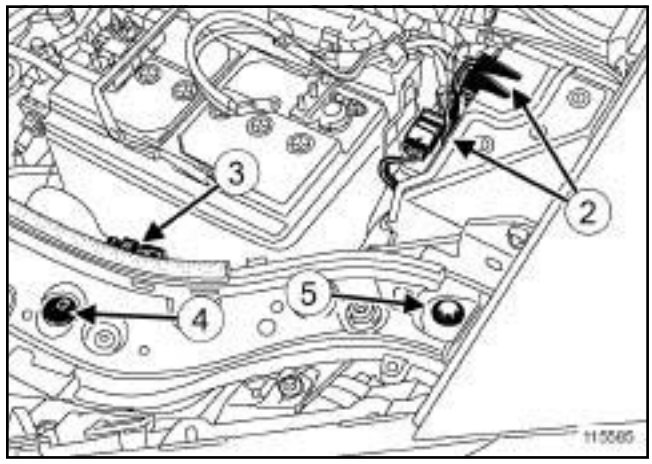

115585

❑ Disconnect the connectors (**2**) from the engine accessories unit.

❑ Unclip the bonnet release cable (**3**) .

❑ Remove:

- the front end panel clips (**4**) ,
- the front end panel upper bolts (**5**) .

❑ Disconnect the screen washer pipes.

M9R

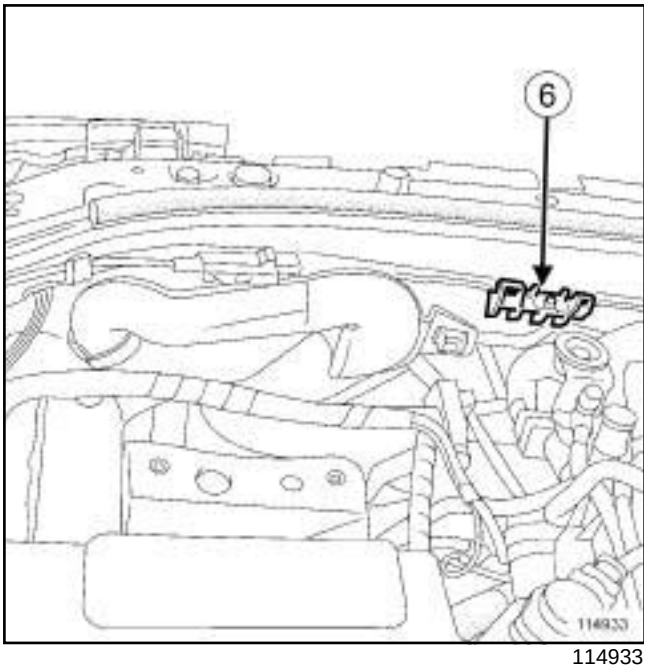

114933

❑ Unclip the air inlet (**6**) .

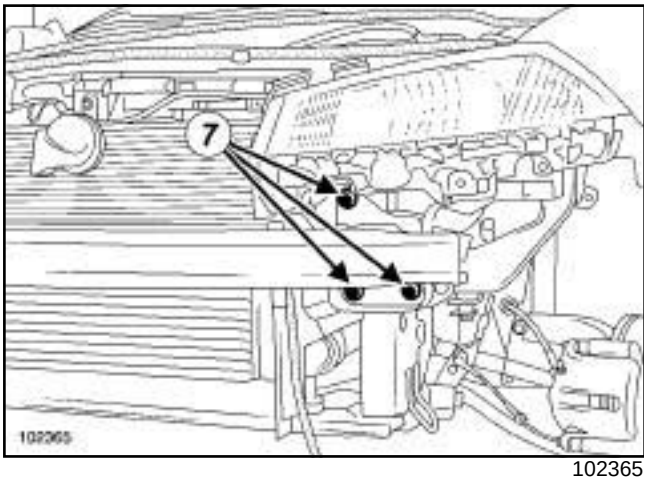

102365

❑ Remove:

- the front end panel lower bolts (**7**) ,
- the front panel,
- the air filter unit (see **12A**, **Fuel mixture**, **Air filter unit: Removal - Refitting**, page **12A-11**) .

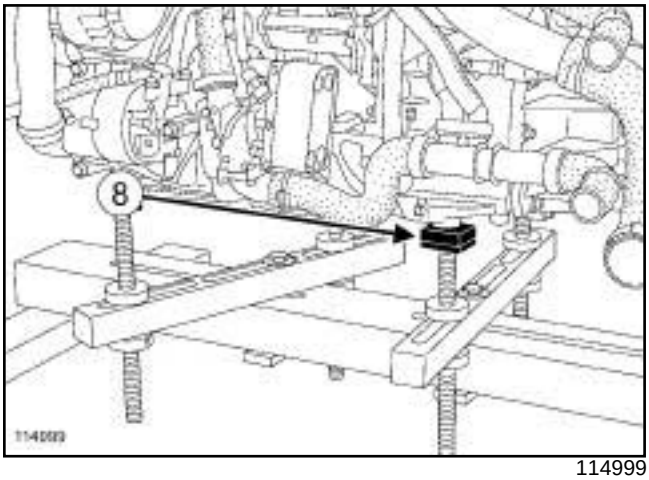

114999

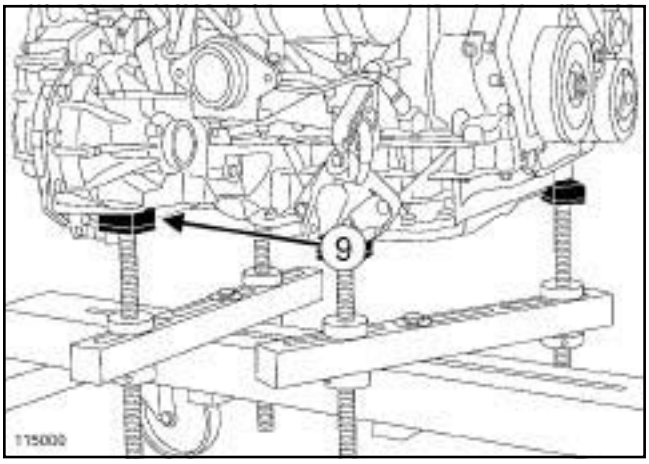

115000

❑ Position the **(Mot. 1390)** on the gearbox on the rubber pads (**8**) and (**9**) .

M9R

II - REMOVAL OF THE LEFT-HAND SUSPENDED ENGINE MOUNTING

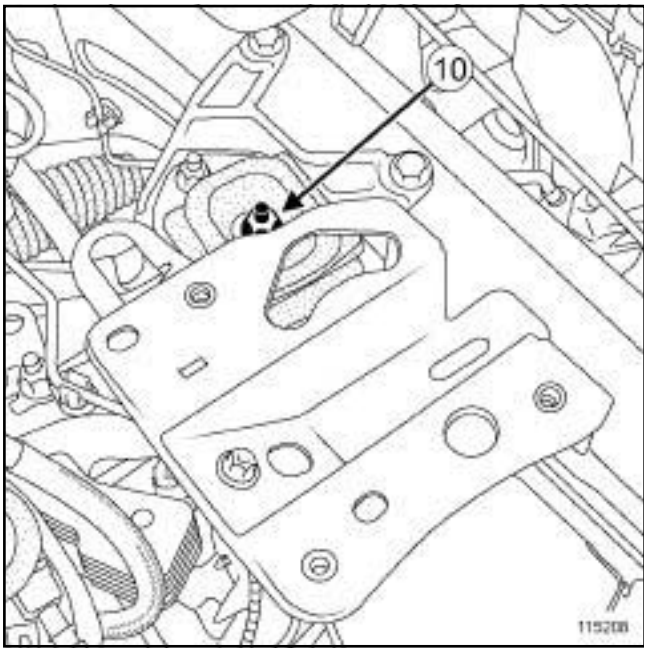

115208

❑ Mark the position of the suspended engine mounting on the body using a **indelible pencil**.

❑ Remove the nut (**10**) from the suspended engine mounting rubber pad shaft.

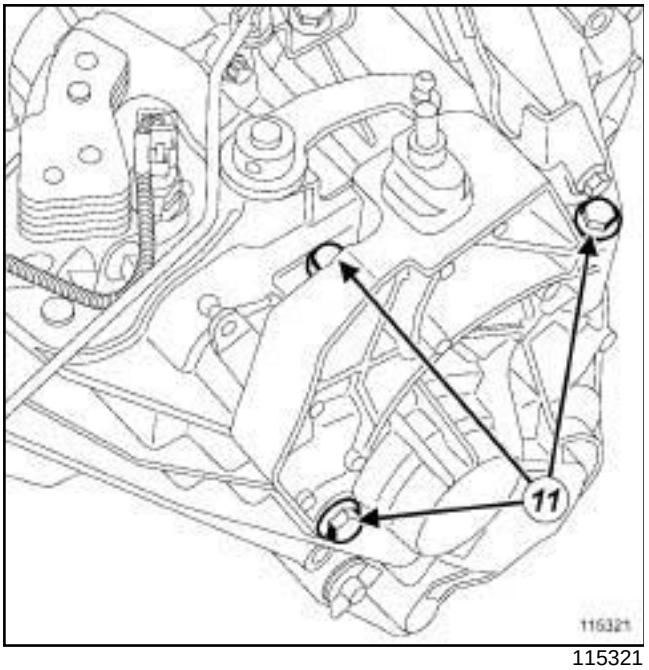

115321

❑ Remove:

- the gearbox mounting bolts (**11**) from the suspended engine mounting,
- the gearbox mounting from the suspended engine mounting.

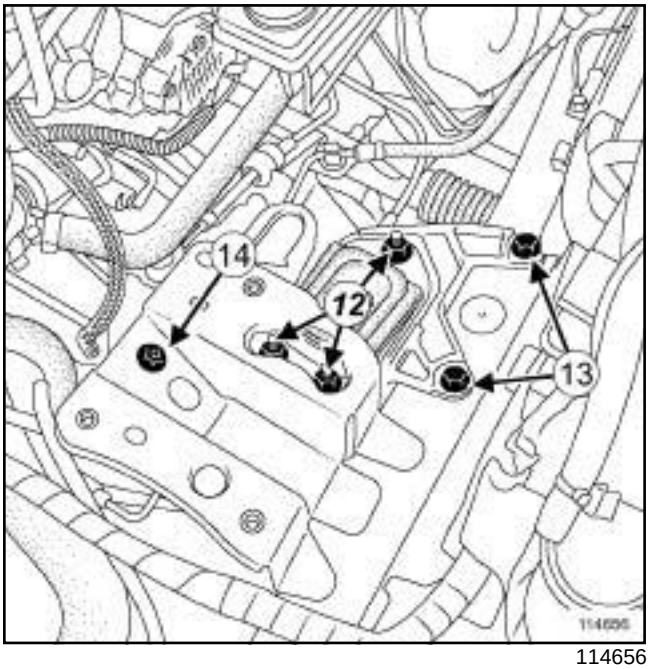

114656

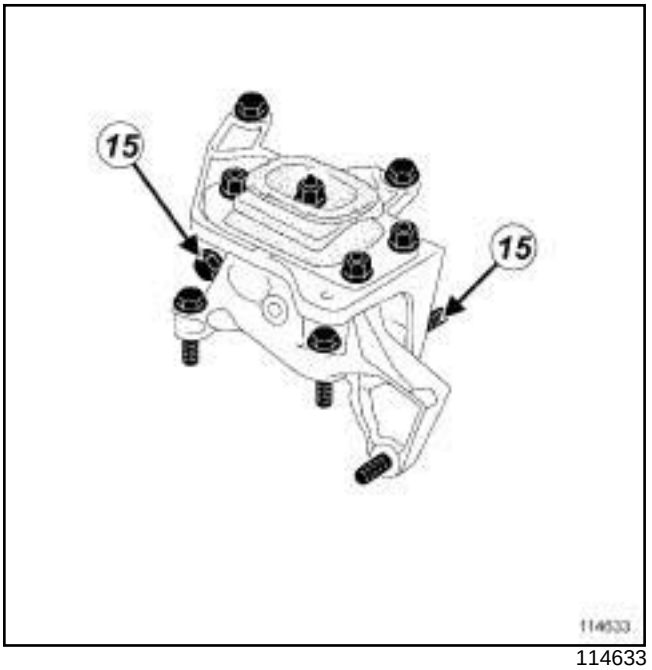

114633

❑ Remove:

- the nuts (**12**) from the suspended engine mounting rubber pad,
- the bolts (**13**) from the suspended engine mounting support on the body,
- the bolt (**14**) from the retaining strut between the battery tray support and the suspended engine mounting support on the body,
- the bolts (**15**) from the suspended engine mounting support on the body,

- the suspended engine mounting support on the body and the suspended engine mounting rubber pad.

REFITTING

I - REFITTING THE LEFT-HAND SUSPENDED ENGINE MOUNTING

❏ Position the suspended engine mounting rubber pad in the suspended engine mounting support on the body.

❏ Refit the suspended engine mounting support on the body with the suspended engine mounting rubber pad.

❏ Refit the bolts of the suspended engine mounting support on the body, respecting the marks made during removal.

❏ Torque tighten the **bolts of the suspended engine mounting support on the body (62 N.m)**.

❏ Refit the nuts of the suspended engine mounting rubber pad.

❏ Torque tighten the **nuts of the suspended engine mounting rubber pad (62 N.m)**.

❏ Refit:

- the suspended engine mounting support on the gearbox,
- the suspended engine mounting support bolts on the gearbox.

❏ Torque tighten the **bolts of the suspended engine mounting support on the gearbox (105 N.m)**.

❏ Refit the nut of the suspended engine mounting rubber pad shaft.

❏ Torque tighten the **nut of the suspended engine mounting rubber pad shaft (62 N.m)**.

❏ Refit the bolt of the retaining strut between the battery tray support and the suspended engine mounting support on the body.

II - FINAL OPERATION

❏ Remove the tool **(Mot. 1390)**.

❏ Refit:

- the air filter unit (see **12A**, **Fuel mixture**, **Air filter unit: Removal - Refitting**, page **12A-11**) ,
- the front panel,
- the front end panel upper bolts,
- the lower bolts from the front end panel,
- the front end panel clips.

❏ Tighten to torque:

- the **front end panel upper bolts (21 N.m)**,
- the **front end panel lower bolts (44 N.m)**.

❏ Clip on the air inlet.

❏ Connect the engine accessories unit connectors.

❏ Clip on the bonnet release cable.

❏ Connect the screen washer pipes.

❏ Refit:

- the battery (see **Battery: Removal - Refitting**) (80A, Battery),
- the engine accessories unit cover,
- the engine accessories unit cover bolts,
- the front bumper (see **Front bumper: Removal - Refitting**) (55A, Exterior protection),
- the engine undertray.

F9Q

Essential special tooling	
Mot. 1453	Multiple-adjusting engine mounting support with retaining straps.
Mot. 1453-01	Additional winder nut on engine lift support Mot. 1453.

Essential equipment
safety strap(s)
indelible pencil

Tightening torques ▽	
gearbox mounting bolts on the suspended engine mounting	**62 N.m**
bolts of the suspended engine mounting support on the body	**62 N.m**
bolts of the suspended engine mounting rubber pad	**105 N.m**
nut of the suspended engine mounting rubber pad	**62 N.m**

REMOVAL

I - REMOVAL PREPARATION OPERATION

❑ Position the vehicle on a two-post lift (see **Vehicle: Towing and lifting**) (02A, Lifting equipment).

❑ Remove:

- the engine undertray,
- the scuttle panel grille (see **Scuttle panel grille: Removal - Refitting**) (56A, Exterior equipment),
- the battery (see **Battery: Removal - Refitting**) (80A, Battery),
- the battery tray (see **Battery tray: Removal - Refitting**) (80A, Battery).

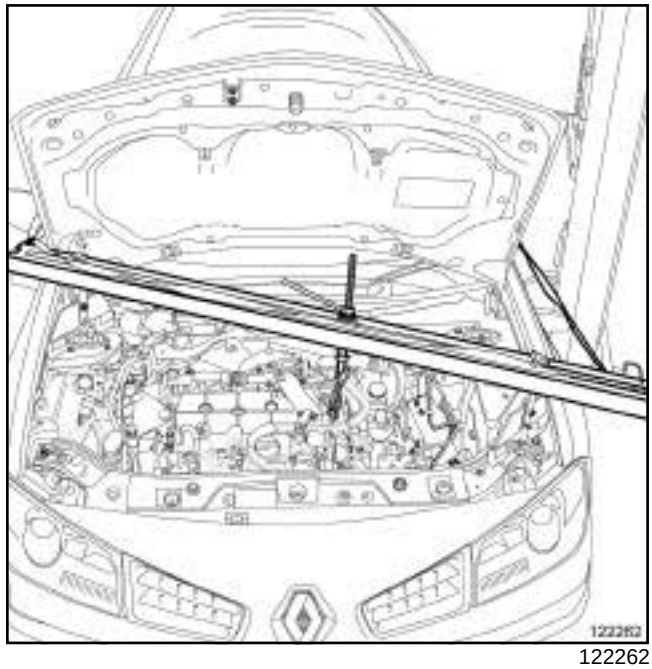

122262

❑ Position the **(Mot. 1453)** fitted with the **(Mot. 1453-01)** and a **safety strap(s)**.

❑ Mark the position of the suspended engine mounting on the body using a **indelible pencil**.

II - REMOVAL OF THE LEFT-HAND SUSPENDED ENGINE MOUNTING

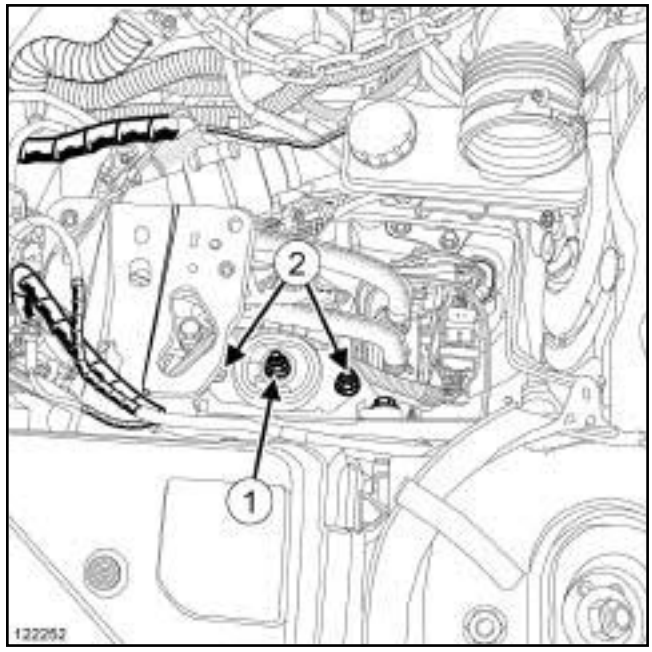

122252

❑ Remove:

- the nut from the suspended engine mounting rubber pad (**1**) ,

F9Q

- the bolts from the suspended engine mounting rubber pad (**2**) ,
- the rubber pad on the suspended engine mounting.

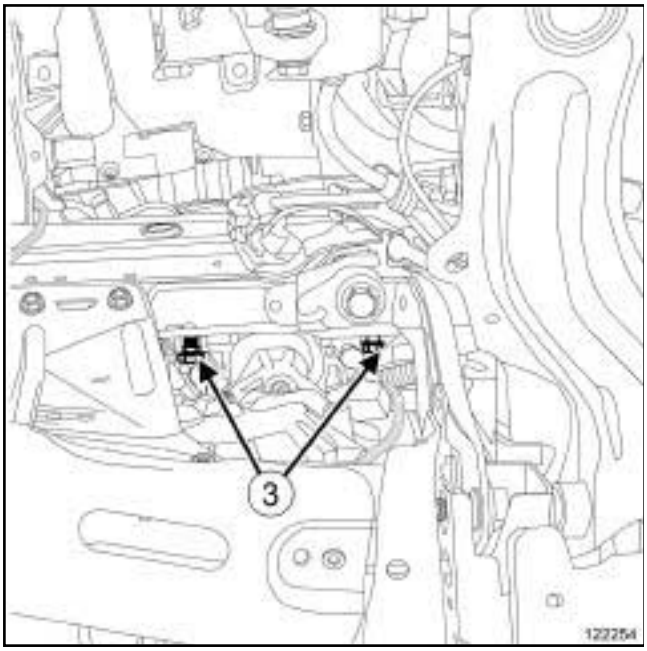

122254

❑ Remove the bolts (**3**) from the mounting on the suspended engine mounting body.

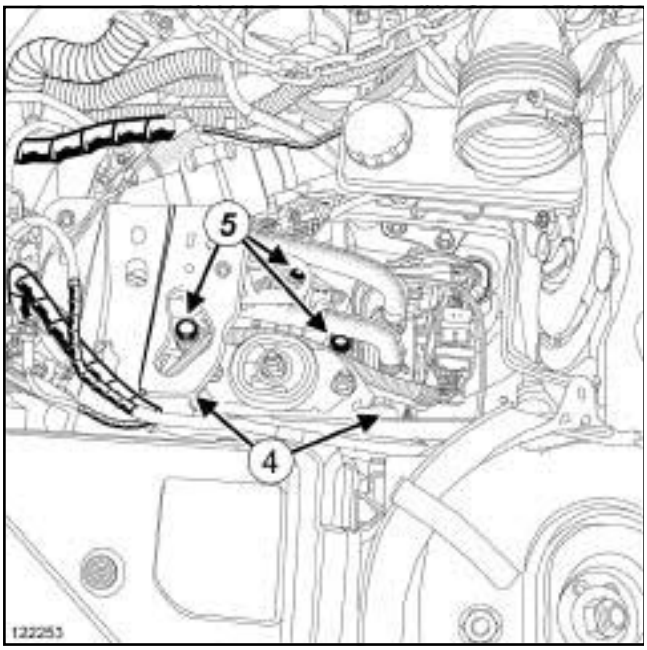

122253

❑ Remove:

- the bolts (**4**) from the suspended engine mounting support on the body,
- the suspended engine mounting support on the body,
- the gearbox mounting bolts (**5**) from the suspended engine mounting,
- the gearbox mounting from the suspended engine mounting.

REFITTING

I - REFITTING THE LEFT-HAND SUSPENDED ENGINE MOUNTING

❑ Refit the support for the suspended engine mounting on the gearbox.

❑ Refit the bolts of the suspended engine mounting support on the gearbox.

❑ Torque tighten the **gearbox mounting bolts on the suspended engine mounting (62 N.m)**.

❑ Refit the support for the suspended engine mounting on the body, respecting the marks made during removal.

❑ Refit the bolts of the suspended engine mounting support on the body.

❑ Torque tighten the **bolts of the suspended engine mounting support on the body (62 N.m)**.

❑ Refit the suspended engine mounting rubber pad, respecting the marks made during removal.

❑ Refit the nut and the bolts of the suspended engine mounting rubber pad.

❑ Torque tighten:

- the **bolts of the suspended engine mounting rubber pad (105 N.m)**,
- the **nut of the suspended engine mounting rubber pad (62 N.m)**.

II - FINAL OPERATION

❑ Remove the tool **(Mot. 1453)**.

❑ Refit:

- the battery tray (see **Battery tray: Removal - Refitting**) (80A, Battery),
- the battery (see **Battery: Removal - Refitting**) (80A, Battery),
- the scuttle panel grille (see **Scuttle panel grille: Removal - Refitting**) (56A, Exterior equipment),
- the engine undertray.

❑ Connect the battery (see **Battery : Removal - Refitting**) (80A, Battery).

B84 or C84 or G84 or K84 or L84 or S84, and K9K, and 732 or 734

Essential special tooling	
Mot. 1453	Multiple-adjusting engine mounting support with retaining straps.

Essential equipment
safety strap(s)

Tightening torques ▽	
right-hand suspended mounting support bolts on the body	**62 Nm**
right-hand suspended mounting support bolts on the engine	**62 Nm**
upper engine tie-bar bolt on the engine	**115 Nm**
upper engine tie-bar bolt on the body	**105 Nm**

REMOVAL

I - REMOVAL PREPARATION OPERATION

❑ Position the vehicle on a two-post lift (see **Vehicle: Towing and lifting**) (MR 364, 02A, Lifting equipment).

❑ Remove:

- the engine covers,
- the scuttle panel grille (see **Scuttle panel grille: Removal - Refitting**) (MR 365, 56A, Exterior equipment).

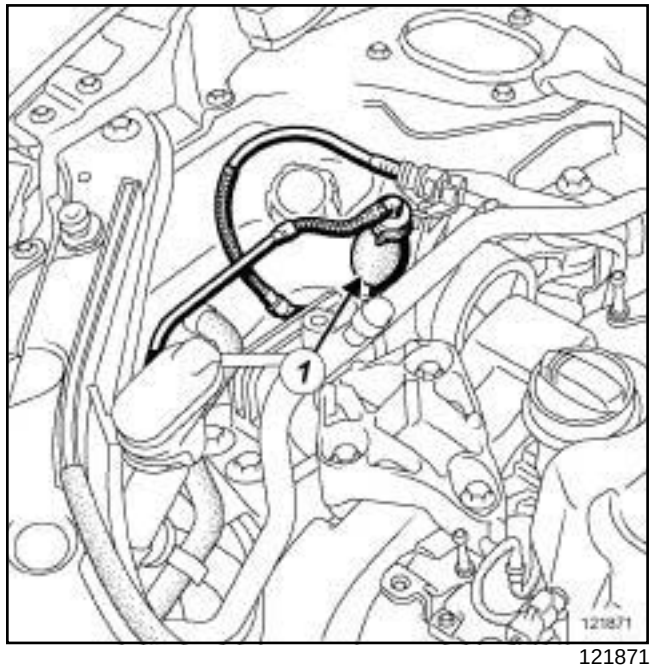

121871

❑ Detach the manual priming pump (**1**) from its mounting.

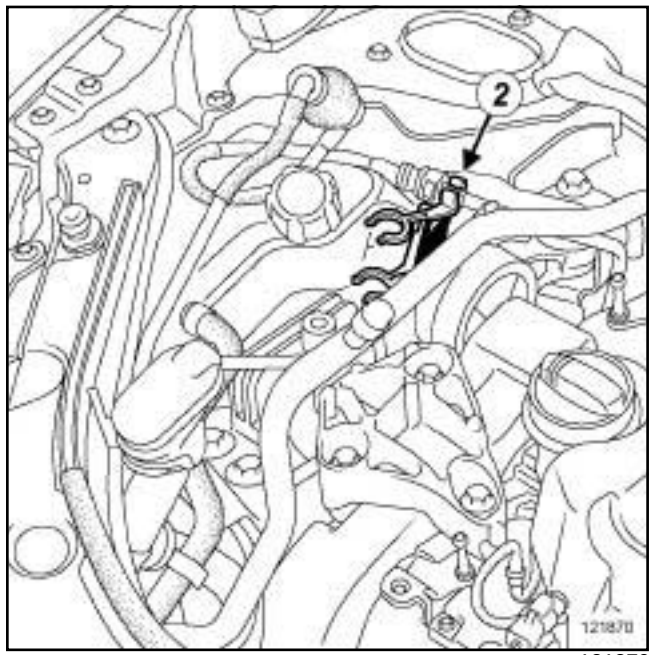

121870

❑ Unclip:

- the manual priming pump mounting from the fuel supply pipe at (**2**) ,
- the manual priming pump mounting from the body.

B84 or C84 or G84 or K84 or L84 or S84, and K9K, and 732 or 734

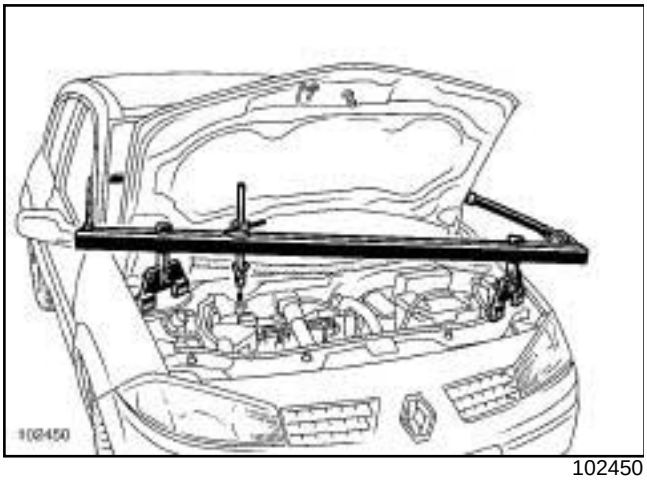

102450

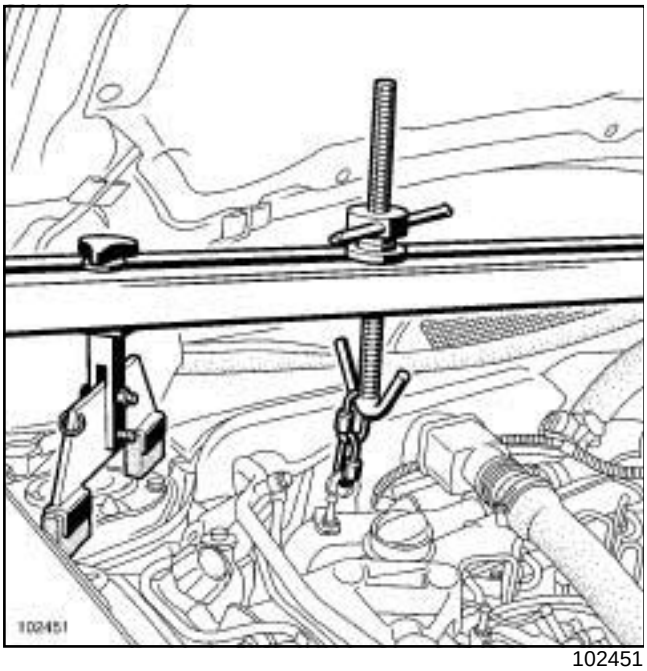

102451

❑ Fit the **(Mot. 1453)** fitted withand **safety strap(s)**.

II - OPERATION FOR REMOVAL OF PART CONCERNED

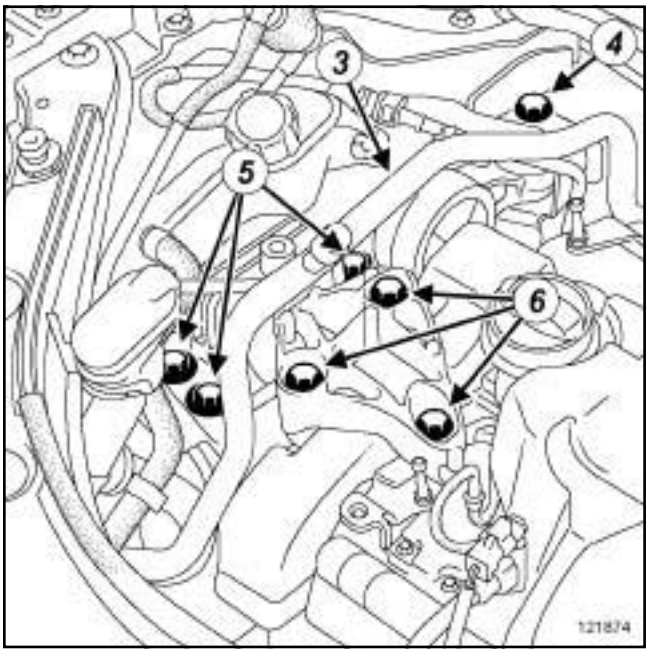

121874

❑ Remove:

- the bolt (**3**) from the upper engine tie-bar on the engine,
- the bolt (**4**) from the upper engine tie-bar on the body,
- the upper engine tie-bar.
- the bolts (**5**) from the right-hand suspended mounting support on the body,
- the right-hand suspended mounting support bolts (**6**) on the engine,
- the right-hand suspended engine mounting.

B84 or C84 or G84 or K84 or L84 or S84, and K9K, and 732 or 734

REFITTING

I - REFITTING OPERATION FOR PART CONCERNED

❑ Refit:

- the right-hand suspended engine mounting,
- the bolts for the right-hand suspended mounting support on the engine,
- the right-hand suspended mounting support bolts on the body,
- the upper engine tie-bar.
- the upper engine tie-bar bolt on the body,
- the upper engine tie-bar bolt on the engine.

❑ Torque tighten:

- the **right-hand suspended mounting support bolts on the body (62 Nm)**,
- the **right-hand suspended mounting support bolts on the engine (62 Nm)**,
- the **upper engine tie-bar bolt on the engine (115 Nm)**,
- the **upper engine tie-bar bolt on the body (105 Nm)**.

II - FINAL OPERATION.

❑ Remove:

- the **safety strap(s)** from the **(Mot. 1453)**,
- the **(Mot. 1453)** fitted with the.

❑ Clip:

- the manual priming pump mounting onto the body,
- the manual priming pump mounting onto the fuel pipe,
- the manual priming pump onto its mounting.

❑ Refit:

- the scuttle panel grille (see **Scuttle panel grille: Removal - Refitting**) (MR 365, 55A, Exterior protection),
- the engine covers.

M9R

Essential special tooling	
Mot. 1390	Support for removing/refitting the engine - gearbox assembly.

Essential equipment
indelible pencil

Tightening torques ▽	
right-hand suspended engine mounting cover bolts	**62 N.m**
right-hand suspended engine mounting rubber pad bolts	**62 N.m**
upper engine tie-bar bolt on the engine	**115 N.m**
upper engine tie-bar bolt on the body	**110 N.m**
front end panel upper bolts	**21 N.m**
front end panel lower bolts	**44 N.m**

REMOVAL

I - REMOVAL PREPARATION OPERATION

❑ Position the vehicle on a two-post lift (see **Vehicle: Towing and lifting**) (02A, Lifting equipment).

❑ Remove:

- the engine cover,
- the engine undertray,
- the windscreen wiper arms (see **Windscreen wiper arm: Removal - Refitting**) (85A, Wiping - Washing),
- the scuttle panel grille (see **Scuttle panel grille: Removal - Refitting**) (56A, Exterior equipment),
- the acoustic protection clips on the scuttle panel partition,
- the acoustic protection,
- the front bumper (see **Front bumper: Removal - Refitting**) (55A, Exterior protection),
- the front wheels (see **Wheel: Removal - Refitting**) (35A, Wheels and tyres),
- the front wheel arch liners (see **Front wheel arch liner: Removal - Refitting**) (55A, Exterior protection).

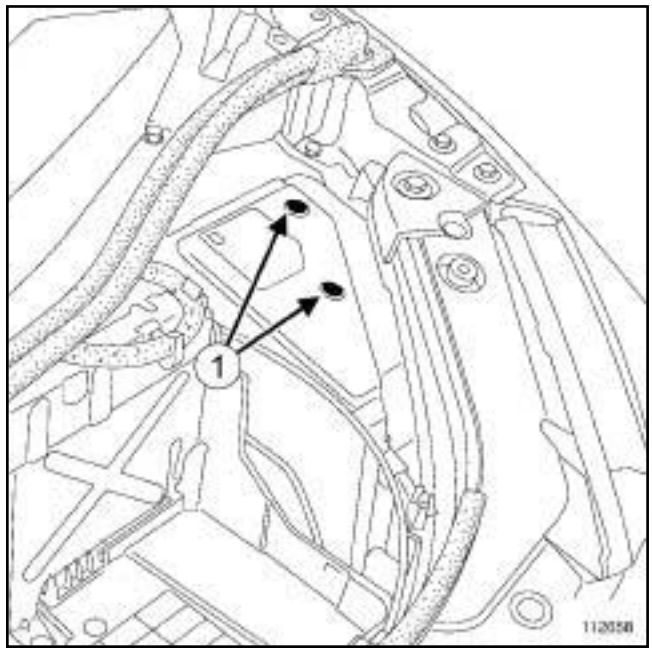

112658

❑ Remove:

- the engine accessories unit cover bolts (**1**) ,
- the engine accessories unit cover.

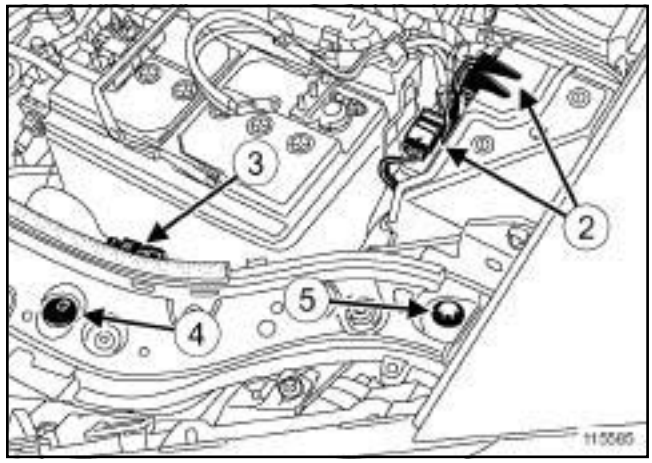

115585

❑ Disconnect the connectors (**2**) from the engine accessories unit.

❑ Unfasten the bonnet opening cable (**3**) .

❑ Remove:

- the front end panel clips (**4**) ,
- the front end panel upper bolts (**5**) .

❑ Disconnect the screen washer pipes.

M9R

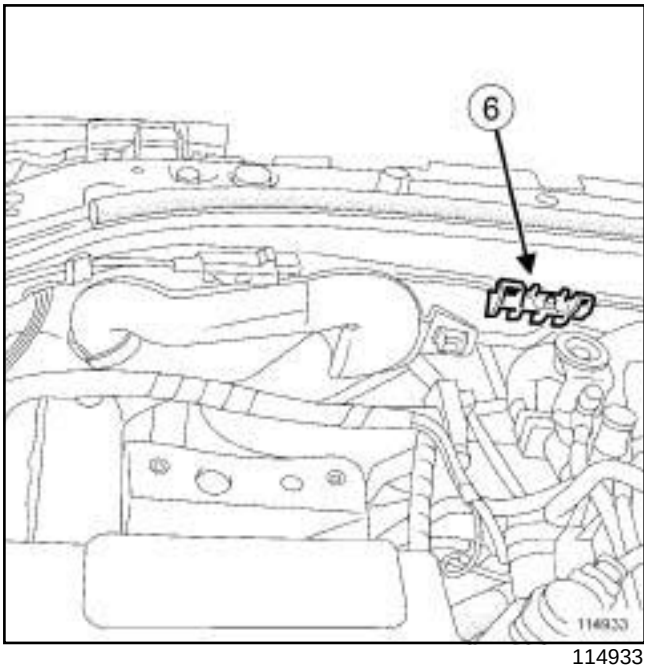

114933

❑ Unclip the air inlet pipe from the air filter unit (**6**) .

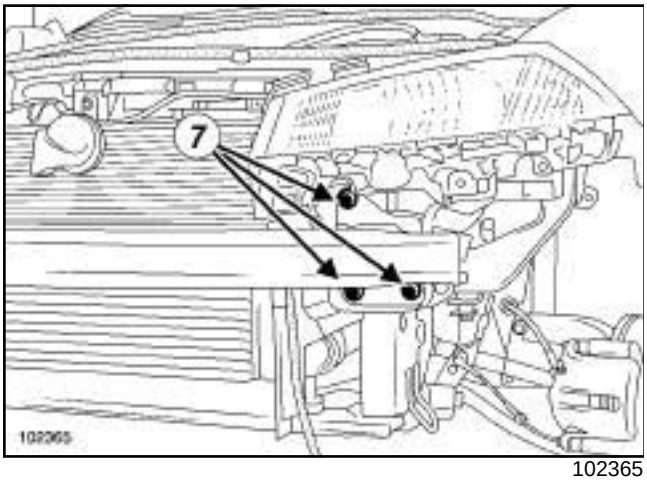

102365

❑ Remove:

- the front end panel lower bolts (**7**) ,
- the front panel,
- the « evaporator - dehydrator reservoir » connecting pipe (see **Dehydration canister - evaporator connecting pipe: Removal - Refitting**) (62A, Air conditioning).

M9R, and 724

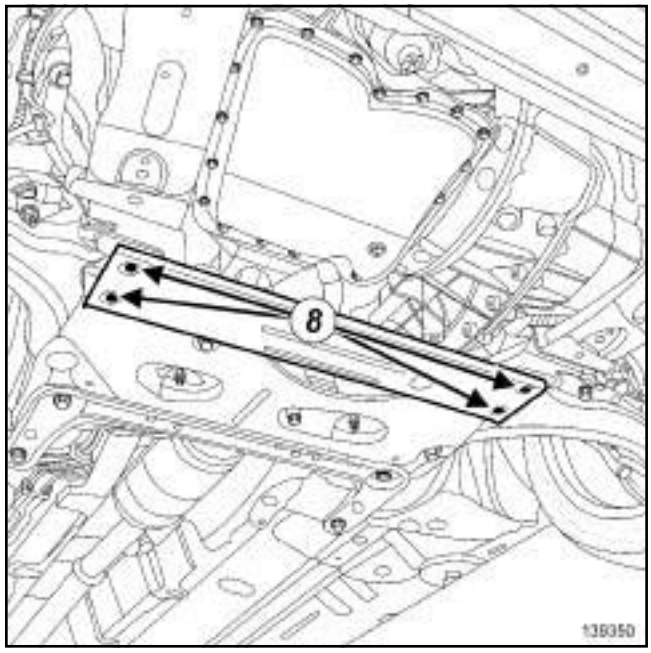

139350

❑ Remove:

- the subframe reinforcement bolts (**8**) ,
- the subframe reinforcement.

M9R

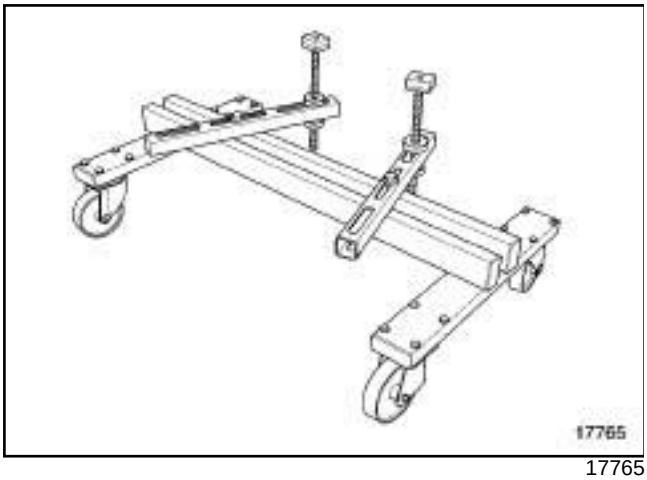

17765

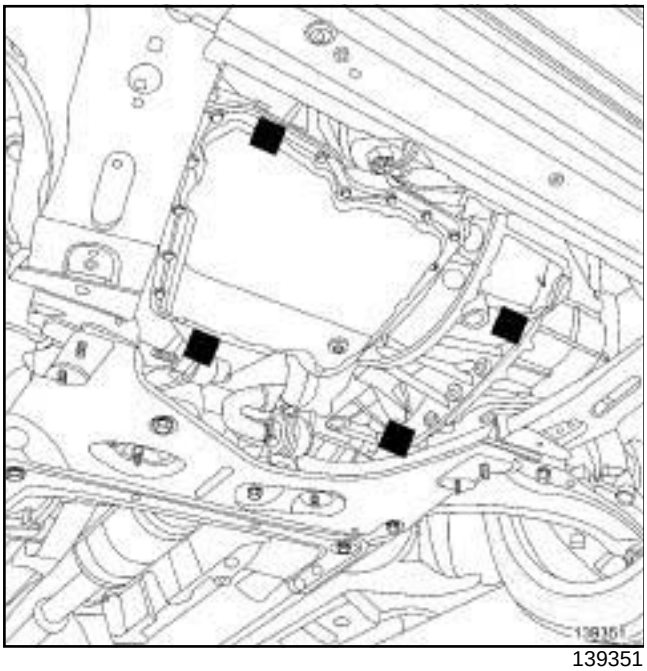

139351

❑ Fit the tool **(Mot. 1390)** according to the marked points.

II - OPERATION FOR REMOVAL OF PART CONCERNED

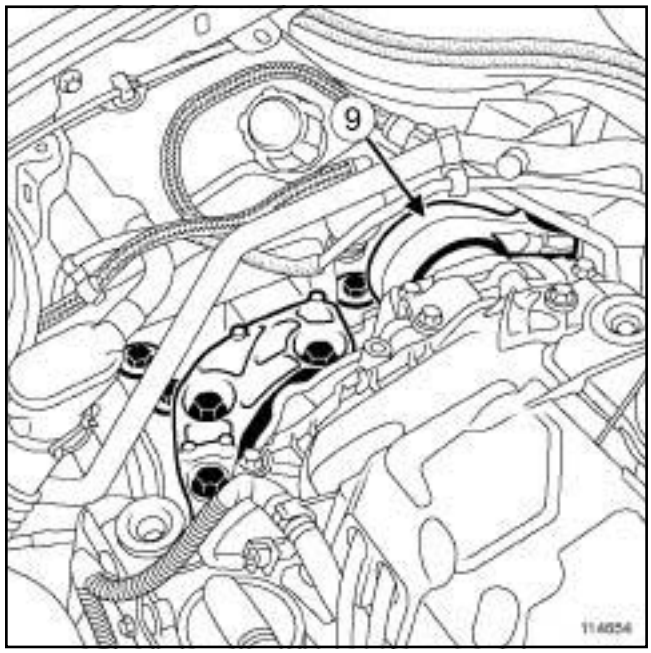

114654

❑ Remove:

- the upper engine tie-bar bolt on the engine,
- the upper engine tie-bar bolt on the body,
- the upper engine tie-bar (**9**) .

M9R

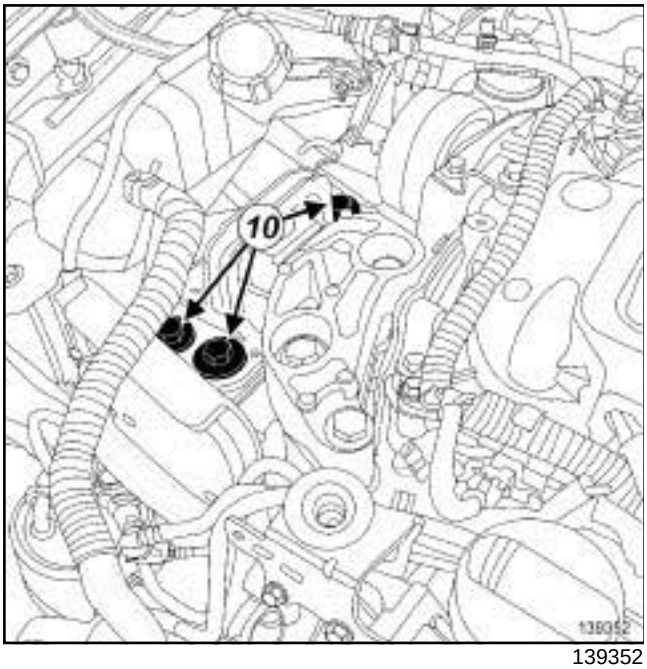

139352

- Mark the position of the suspended engine mounting on the body using a **indelible pencil**.
- Remove the bolts (**10**) from the right-hand suspended engine mounting rubber pad on the body.
- Gently lift the engine until the rubber pad detaches from the body.

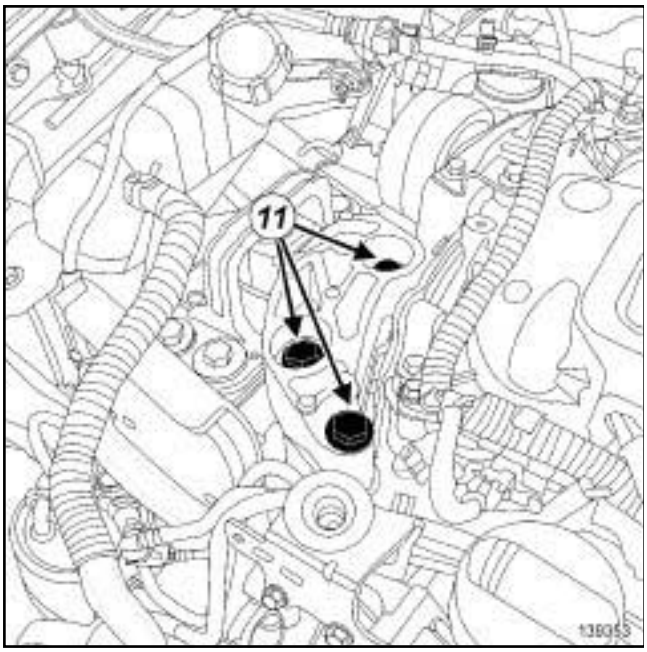

139353

- Remove:
  - the right-hand suspended engine mounting cover mounting bolts (**11**) from the engine.
  - the right-hand suspended engine mounting.

REFITTING

I - REFITTING OPERATION FOR PART CONCERNED

- Fit:
  - the right-hand suspended engine mounting,
  - the bolts of the right-hand suspended engine mounting cover.
- Torque tighten the **right-hand suspended engine mounting cover bolts (62 N.m)**.
- Lower the engine until the rubber pad comes into contact with the body.
- Position the rubber pad in relation to the mark made during removal.
- Fit the bolts of the right-hand suspended engine mounting rubber pad on the body.
- Torque tighten the **right-hand suspended engine mounting rubber pad bolts (62 N.m)**.
- Refit:
  - the upper engine tie-bar,
  - the upper engine tie-bar bolt on the engine,
  - the upper engine tie-bar bolt on the body.
- Torque tighten:
  - the **upper engine tie-bar bolt on the engine (115 N.m)**,
  - the **upper engine tie-bar bolt on the body (110 N.m)**.

II - FINAL OPERATION

- Remove the **(Mot. 1390)**.
- Refit:
  - the « evaporator - dehydrator reservoir » connecting pipe (see **Dehydration canister - evaporator connecting pipe: Removal - Refitting**) (62A, Air conditioning),
  - the front panel,
  - the front end panel upper bolts,
  - the lower bolts from the front end panel,
  - the front end panel clips.
- Tighten to torque:
  - the **front end panel upper bolts (21 N.m)**,
  - the **front end panel lower bolts (44 N.m)**.
- Clip the air inlet pipe onto the air filter unit.

M9R

- ❑ Connect the engine accessories unit connectors.
- ❑ Refit the cover for the engine accessories unit.
- ❑ Clip the bonnet opening cable.
- ❑ Connect the screen washer pipes.

B84 or C84 or E84 or G84 or K84 or L84 or S84, and M9R, and 724

- ❑ Refit the subframe reinforcement.

- ❑ Refit:
  - the front bumper (see **Front bumper: Removal - Refitting**) (55A, Exterior protection),
  - the front wheel arch liners (see **Front wheel arch liner: Removal - Refitting**) (55A, Exterior protection),
  - the front wheels (see **Wheel: Removal - Refitting**) (35A, Wheels and tyres),
  - the acoustic protection.
  - the acoustic protection clips on the scuttle panel partition,
  - the scuttle panel grille (see **Scuttle panel grille: Removal - Refitting**) (56A, Exterior equipment),
  - the windscreen wiper arms (see **Windscreen wiper arm: Removal - Refitting**) (85A, Wiping - Washing),
  - the engine undertray,
  - the engine cover.

F9Q

Essential special tooling	
Mot. 1453	Multiple-adjusting engine mounting support with retaining straps.
Mot. 1453-01	Additional winder nut on engine lift support Mot. 1453.

Essential equipment
safety strap(s)
indelible pencil

Tightening torques ▽	
suspended engine mounting cover bolts	**62 N.m**
suspended engine mounting rubber pad bolts	**62 N.m**
upper engine tie-bar bolt on the engine	**115 N.m**
upper engine tie-bar bolt on the body	**105 N.m**

REMOVAL

I - REMOVAL PREPARATION OPERATION

❑ Position the vehicle on a two-post lift (see **Vehicle: Towing and lifting**) (02A, Lifting equipment).

❑ Remove:

- the engine covers,
- the scuttle panel grille (see **Scuttle panel grille: Removal - Refitting**) (56A, Exterior equipment).

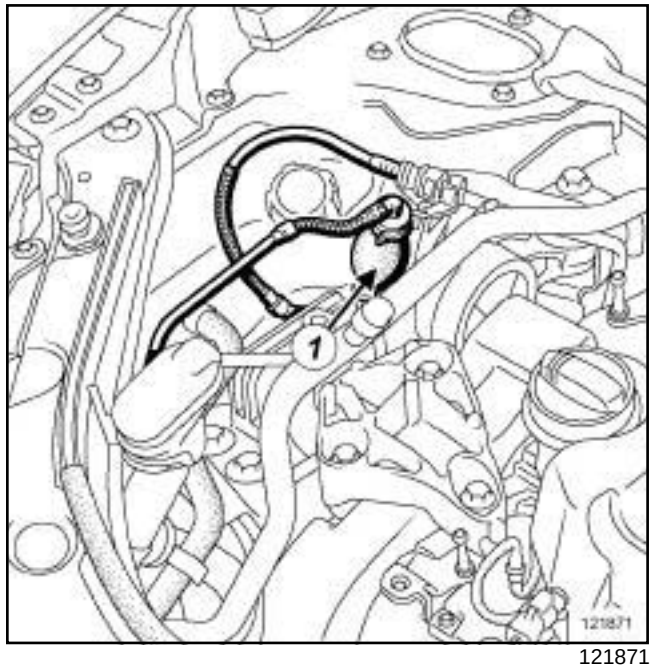

121871

❑ Detach the manual priming pump (**1**) from its mounting.

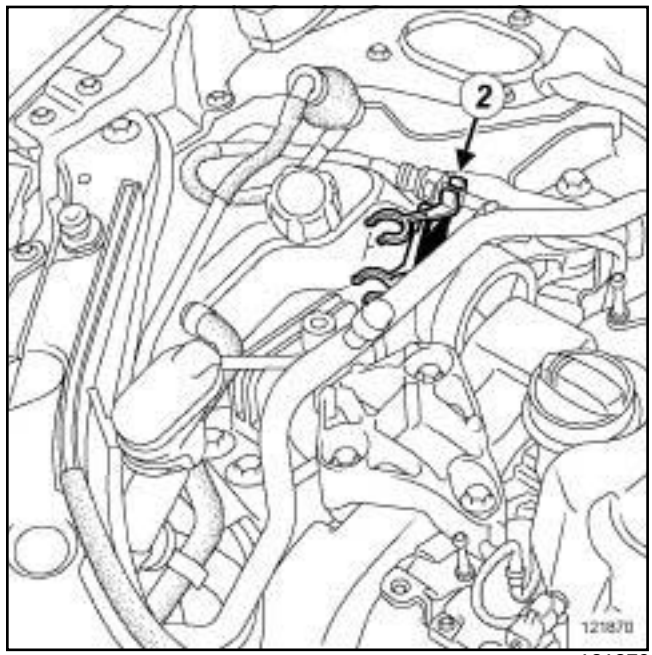

121870

❑ Unclip:

- the manual priming pump mounting from the fuel supply pipe at (**2**) ,
- the manual priming pump mounting from the body.

F9Q

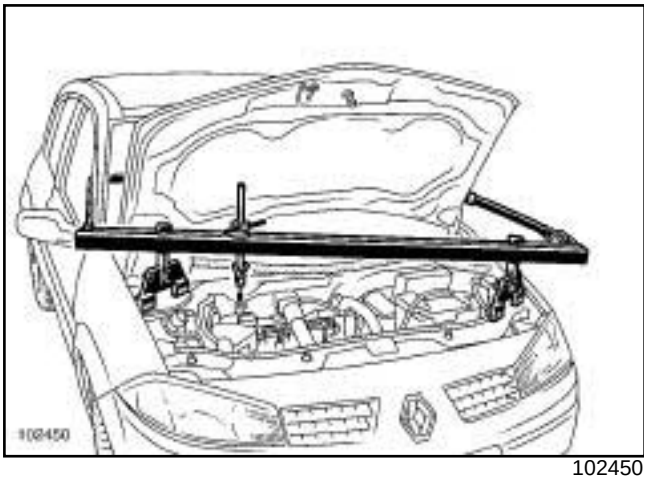

102450

❑ Fit the **(Mot. 1453)** fitted with the **(Mot. 1453-01)** with a **safety strap(s)**.

II - REMOVAL OPERATION FOR THE RIGHT-HAND SUSPENDED ENGINE MOUNTING

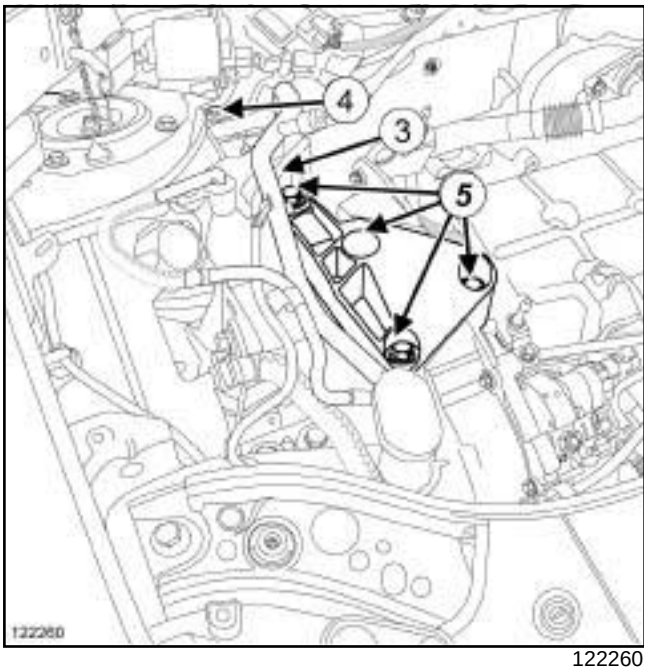

122260

❑ Remove:

- the bolt (**3**) from the upper engine tie-bar on the engine,
- the bolt (**4**) from the upper engine tie-bar on the body,
- the upper engine tie-bar,
- the bolts (**5**) from the suspended engine mounting cover.

❑ Mark the position of the suspended engine mounting rubber pad on the body using a **indelible pencil**.

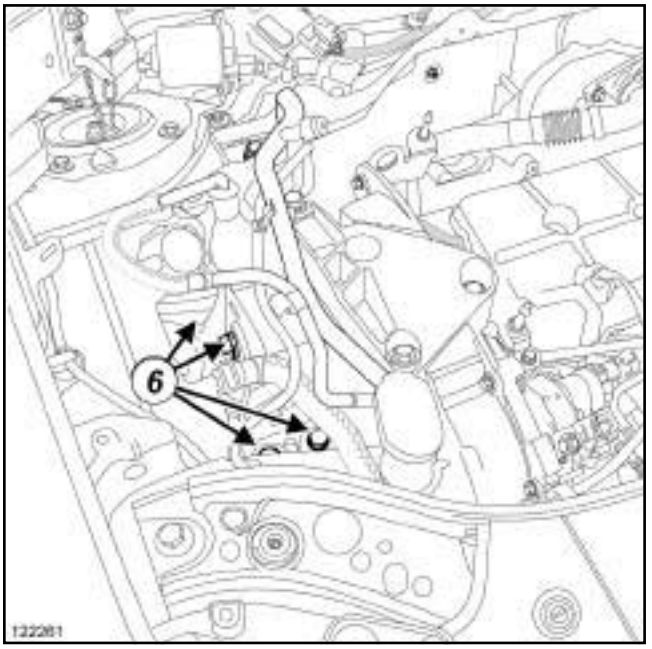

122261

❑ Remove:

- the bolts (**6**) of the suspended engine mounting rubber pad,
- the "rubber pad - cover" assembly of the suspended engine mounting.

F9Q

REFITTING

I - REFITTING THE RIGHT-HAND SUSPENDED ENGINE MOUNTING

❏ Refit:

- the "rubber pad - cover" assembly of the suspended engine mounting,
- the bolts of the suspended engine mounting cover.

❏ Torque tighten the **suspended engine mounting cover bolts (62 N.m)**.

❏ Lower the engine in order to fit the suspended engine mounting rubber pad in its position marked during removal.

❏ Refit the bolts of the suspended engine mounting rubber pad.

❏ Torque tighten the **suspended engine mounting rubber pad bolts (62 N.m)**.

❏ Refit:

- the upper engine tie-bar,
- the upper engine tie-bar bolt on the body,
- the upper engine tie-bar bolt on the engine.

❏ Torque tighten:

- the **upper engine tie-bar bolt on the engine (115 N.m)**,
- the **upper engine tie-bar bolt on the body (105 N.m)**.

II - FINAL OPERATION

❏ Remove:

- the **safety strap(s)** from the **(Mot. 1453)**,
- the **(Mot. 1453)** fitted with the **(Mot. 1453-01)**.

❏ Clip:

- the manual priming pump mounting onto the body,
- the manual priming pump mounting onto the fuel pipe,
- the manual priming pump to its mounting.

❏ Refit:

- the scuttle panel grille (see **Scuttle panel grille: Removal - Refitting**) (55A, Exterior protection),
- the engine covers.

K9K

Essential special tooling	
Mot. 1672	Lower engine support.

Tightening torques ▽	
right-hand suspended engine mounting bolts on the body	**62 N.m**
right-hand suspended engine mounting bolts on the engine	**62 N.m**
upper engine tie-bar bolt on the body	**115 N.m**
upper engine tie-bar bolt on the engine	**105 N.m**

REMOVAL

I - REMOVAL PREPARATION OPERATION

❑ Position the vehicle on a two-post lift (see **Vehicle: Towing and lifting**) (02A, Lifting equipment).

❑ Remove the engine covers.

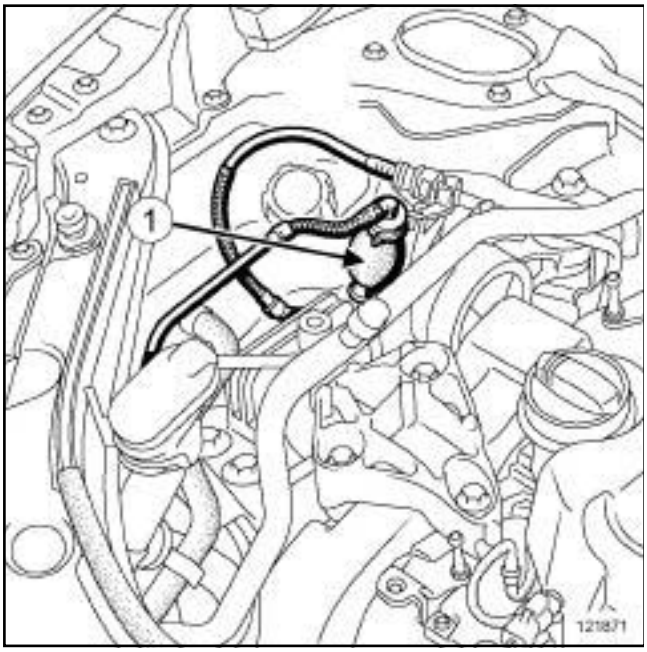

121871

❑ Detach the manual priming pump (**1**) from its mounting.

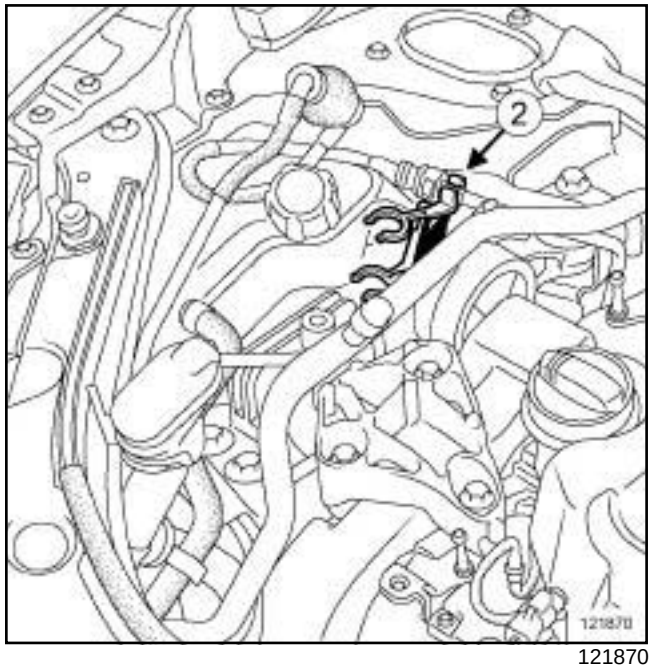

121870

❑ Unclip:

- the manual priming pump mounting from the fuel supply pipe at (**2**) ,
- the manual priming pump mounting from the body.

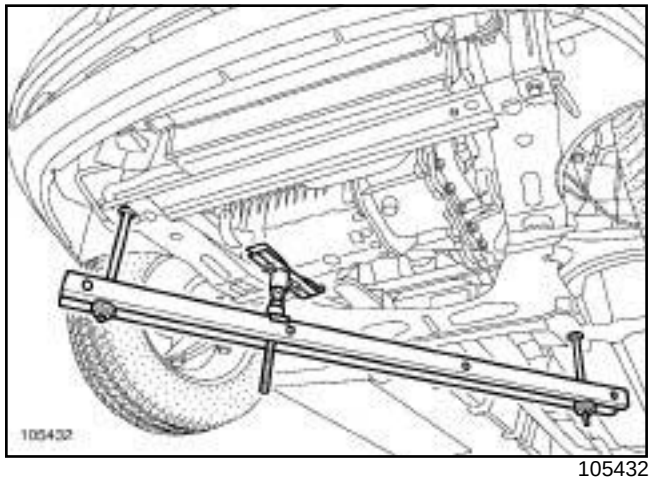

105432

❑ Position the **(Mot. 1672)**

II - OPERATION FOR REMOVAL OF PART CONCERNED

❑ Mark the position of the right-hand suspended engine mounting on the body using an indelible pen.

K9K

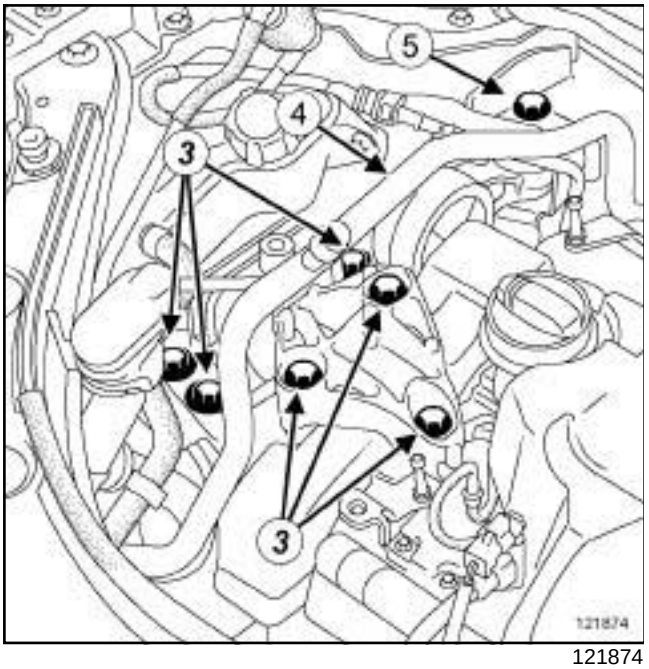

121874

❑ Remove the right-hand suspended engine mounting bolts (**3**) .

K9K, and 732 or 734

❑ Remove:

- the bolt ***(4)*** from the upper engine tie-bar on the engine,
- the bolt ***(5)*** from the upper engine tie-bar on the body,
- the upper engine tie-bar.

❑ Remove the right-hand suspended engine mounting.

REFITTING

I - REFITTING OPERATION FOR PART CONCERNED

❑ Position the right-hand suspended engine mounting in relation to the mark made at the time of removal.

❑ Refit the right suspended engine mounting.

K9K, and 732 or 734

❑ Refit the upper engine tie-bar.

❑ Tighten to torque:

- the **right-hand suspended engine mounting bolts on the body (62 N.m)**,
- the **right-hand suspended engine mounting bolts on the engine (62 N.m)**.

K9K, and 732 or 734

❑ Tighten to torque:

- the **upper engine tie-bar bolt on the body (115 N.m)**,
- the **upper engine tie-bar bolt on the engine (105 N.m)**.

II - FINAL OPERATION

❑ Remove the tool **(Mot. 1672)**.

❑ Clip:

- the manual priming pump mounting onto the body,
- the manual priming pump mounting onto the fuel pipe,
- the manual priming pump to its mounting.

❑ Refit the engine covers.

K4J or K4M

Essential special tooling	
Mot. 1453	Multiple-adjusting engine mounting support with retaining straps.

Essential equipment
safety strap(s)
indelible pencil

Tightening torques ▽	
right-hand suspended engine mounting cover bolts on the engine	**62 N.m**
bolts for the rubber pad of the suspended engine mounting on the body	**62 N.m**
lower engine tie-bar bolt on the engine	**105 N.m**
lower engine tie-bar bolt on the subframe	**105 N.m**

REMOVAL

I - REMOVAL PREPARATION OPERATION

❑ Position the vehicle on a two-post lift (see **Vehicle: Towing and lifting**) (02A, Lifting equipment).

❑ Remove:

- the engine undertray bolts,
- the engine undertray,
- the windscreen wiper arms (see **Windscreen wiper arm: Removal - Refitting**) (85A, Wiping - Washing),
- the scuttle panel grille (see **Scuttle panel grille: Removal - Refitting**) (56A, Exterior equipment),
- the front right-hand wheel (see **Wheel: Removal - Refitting**) (35A, Wheels and tyres),
- the front right-hand wheel arch liner (see **Front wheel arch liner: Removal - Refitting**) (55A, Exterior protection).

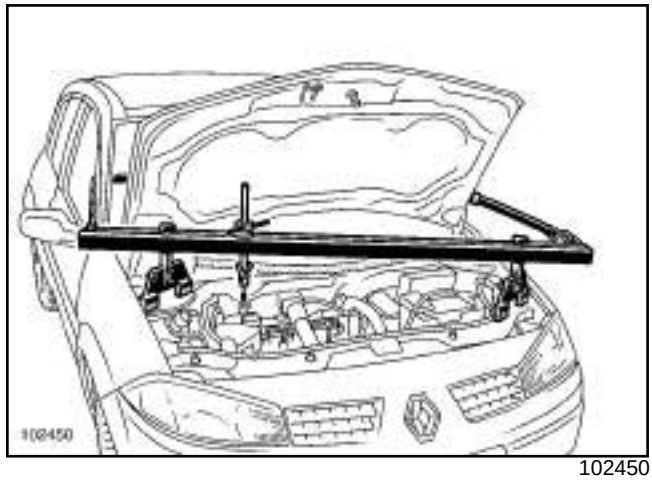

102450

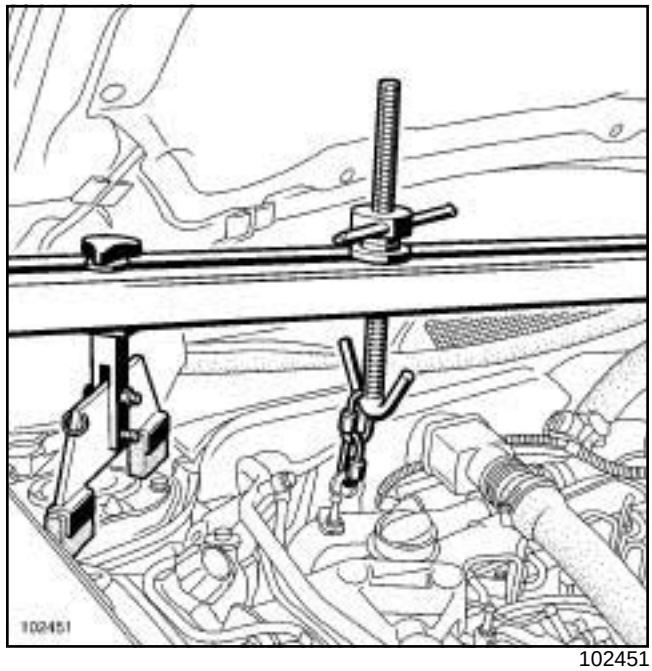

102451

❑ Fit the tool **(Mot. 1453)** equipped with a **safety strap(s)**.

K4J or K4M

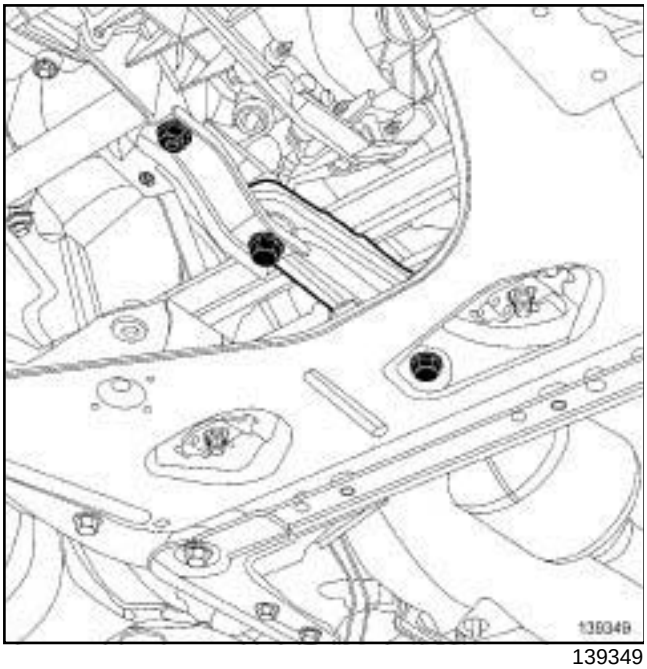

139349

❑ Remove:

- the lower engine tie-bar bolts,
- the lower engine tie-bar.

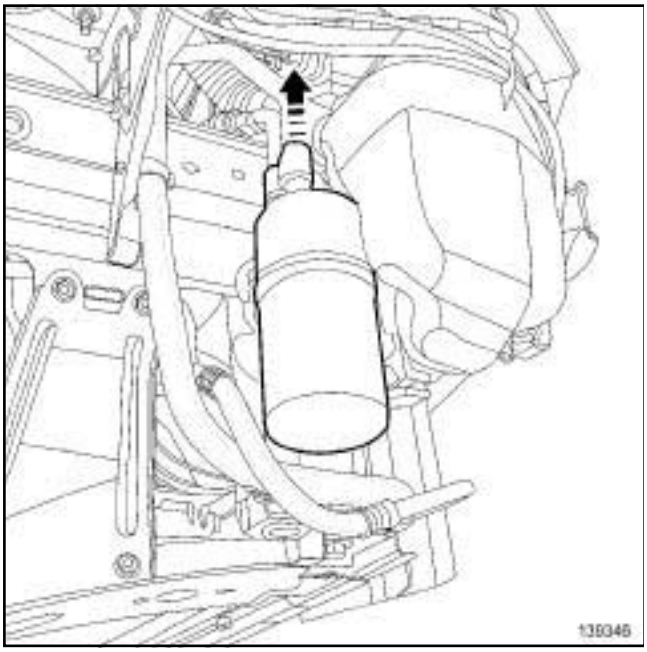

139346

❑ Separate the dehydrator reservoir from the right-hand side member in accordance with the direction of the arrow.

II - OPERATION FOR REMOVAL OF PART CONCERNED

❑ Mark the position of the suspended engine mounting on the body using a **indelible pencil**.

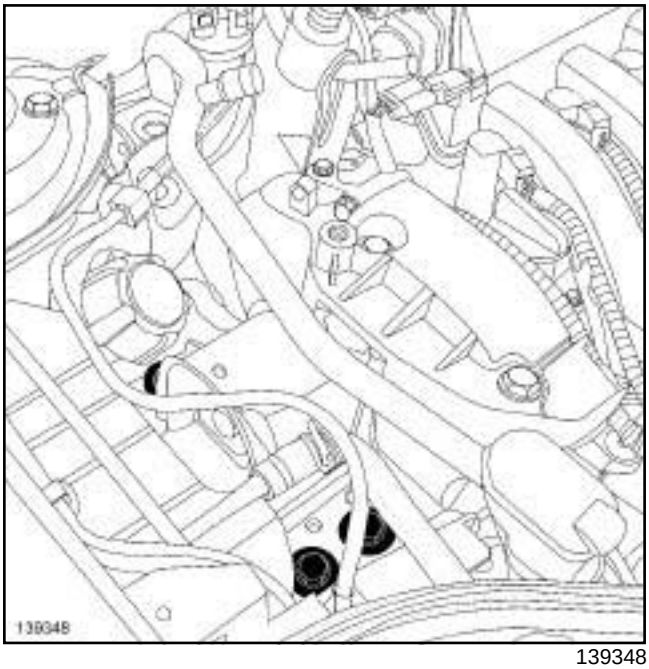

139348

❑ Remove the bolts from the right-hand suspended engine mounting rubber pad on the body.

❑ Using the tool **(Mot. 1453)**, lift the engine slightly until the rubber pad detaches from the body.

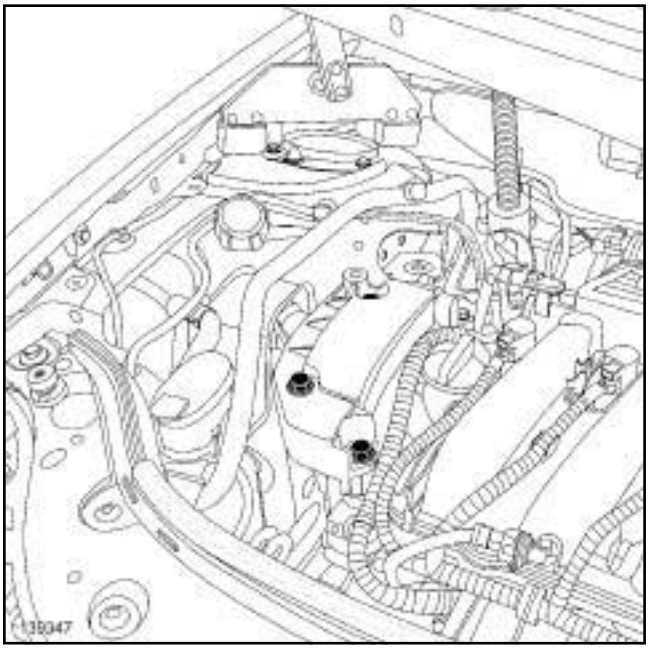

139347

❑ Remove the bolts from the right-hand suspended engine mounting cover on the engine.

❑ Lower the engine using the **(Mot. 1453)**.

K4J or K4M

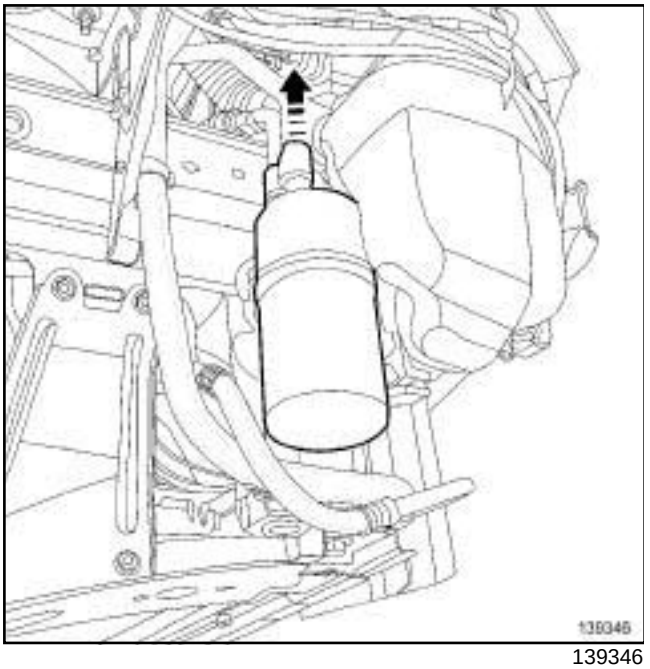

139346

❑ Lift the dehydrator reservoir upwards slightly to allow the right-hand suspended engine mounting to pass through.

❑ Remove the right-hand suspended engine mounting.

REFITTING

I - REFITTING OPERATION FOR PART CONCERNED

❑ Fit:

- the right-hand suspended engine mounting assembly,
- the bolts of the right-hand suspended engine mounting cover on the engine.

❑ Raise the engine again using the tool **(Mot. 1453)**.

❑ Torque tighten the **right-hand suspended engine mounting cover bolts on the engine (62 N.m)**.

❑ Lower the engine until the rubber pad comes into contact with the body.

❑ Position the suspended engine mounting rubber pad in line with the marks made during removal.

❑ Fit the bolts of the right-hand suspended engine mounting rubber pad on the body.

❑ Torque tighten the **bolts for the rubber pad of the suspended engine mounting on the body (62 N.m)**.

II - FINAL OPERATION

❑ Remove:

- the **safety strap(s)** from the **(Mot. 1453)**,
- the **(Mot. 1453)**.

❑ Refit the lower engine tie-bar.

❑ Tighten to torque:

- the **lower engine tie-bar bolt on the engine (105 N.m)**,
- the **lower engine tie-bar bolt on the subframe (105 N.m)**.

❑ Fit the dehydrator reservoir on the right-hand side member.

❑ Refit:

- the front right-hand wheel arch liner (see **Front wheel arch liner: Removal - Refitting**) (55A, Exterior protection),
- the front right-hand wheel (see **Wheel: Removal - Refitting**) (35A, Wheels and tyres),
- the scuttle panel grille (see **Scuttle panel grille: Removal - Refitting**) (56A, Exterior equipment),
- the windscreen wiper arms (see **Windscreen wiper arm: Removal - Refitting**) (85A, Wiping - Washing),
- the engine undertray.

Lower engine tie-bar: Removal - Refitting

B84 or C84 or G84 or S84, and K9K, and 732 or 734

Tightening torques ▽	
engine tie-bar bolt on its support	**180 Nm**
engine tie-bar bolt on the subframe	**105 Nm**

REMOVAL

I - REMOVAL PREPARATION OPERATION

❑ Position the vehicle on a two-post lift (see **Vehicle: Towing and lifting**) (MR 364, 02A, Lifting equipment).

❑ Remove:

- the engine undertray bolts,
- the engine undertray.

II - OPERATION FOR REMOVAL OF PART CONCERNED

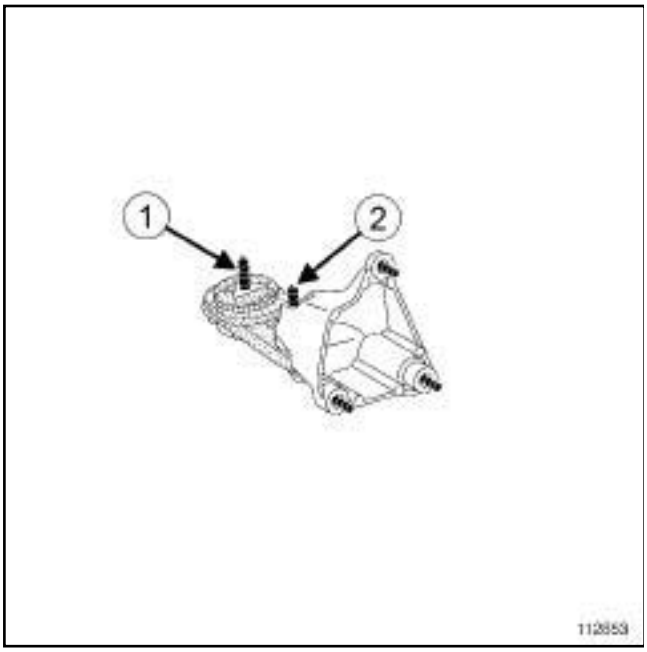

112653

❑ Remove:

- the engine tie-bar bolt from the sub-frame (**1**) ,
- the engine tie-bar bolt from its mounting (**2**) ,

REFITTING

I - REFITTING PREPARATIONS OPERATION

❑ Refit:

- the engine tie-bar bolt on its support,
- the engine tie-bar bolt on the subframe.

❑ Torque tighten:

- the **engine tie-bar bolt on its support (180 Nm)**,
- the **engine tie-bar bolt on the subframe (105 Nm)**.

II - FINAL OPERATION.

❑ Refit:

- the engine undertray;
- the engine undertray bolts.

B84 or C84 or E84 or K84 or L84, and M9R

Tightening torques ▽	
lower engine tie-bar bolt on its mounting	**180 Nm**
lower engine tie-bar bolt on the subframe	**105 Nm**

REMOVAL

I - REMOVAL PREPARATION OPERATION

❑ Position the vehicle on a two-post lift (see **Vehicle: Towing and lifting**) (MR 364, 02A, Lifting equipment).

❑ Disconnect the battery (see **Battery: Removal - Refitting**) (MR 364, 80A, Battery).

❑ Remove:

- the engine undertray bolts,
- the engine undertray.

M9R, and 724

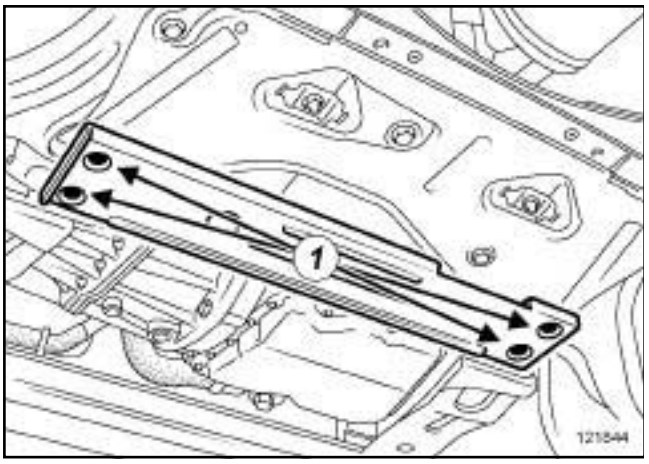

121844

❑ Remove:

- the reinforcement lower cross member nuts (**1**) ,
- the reinforcement lower cross member.

II - OPERATION FOR REMOVAL OF PART CONCERNED

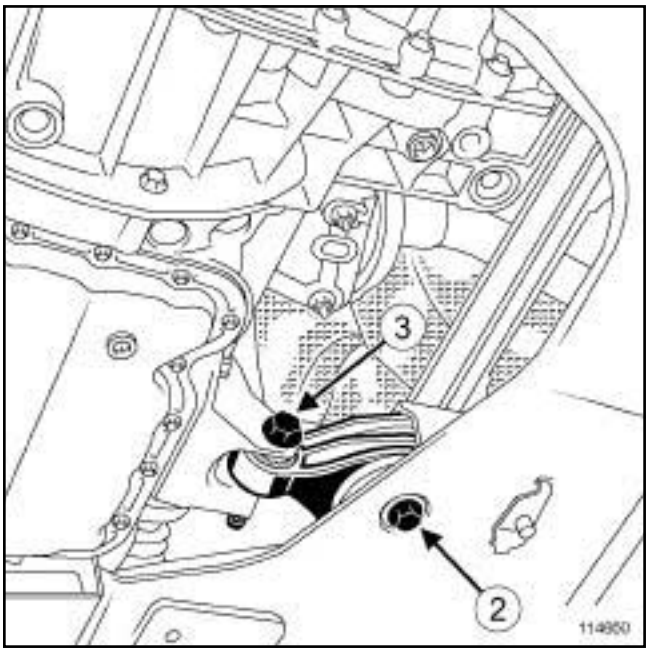

114650

❑ Remove:

- the bolt (**2**) from the lower engine tie-bar on the subframe,
- the bolt (**3**) mounting the lower engine tie-bar on its support.

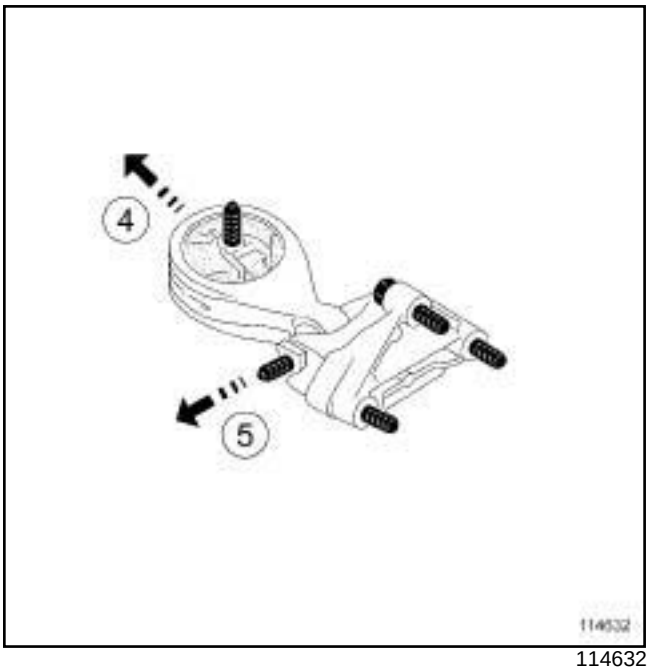

114632

❑ Remove the lower engine tie-bar:

- by pushing it back at (**4**) to detach it from its support,
- by pivoting it at (**5**) to the right.

B84 or C84 or E84 or K84 or L84, and M9R

REFITTING

I - REFITTING PREPARATIONS OPERATION

❑ Refit:

- the lower engine tie-bar,
- the lower engine tie-bar bolt on its mounting,
- the lower engine tie-bar bolt on the subframe.

❑ Torque tighten:

- the **lower engine tie-bar bolt on its mounting (180 Nm)**,
- the **lower engine tie-bar bolt on the subframe (105 Nm)**.

II - FINAL OPERATION.

M9R, and 724

❑ Refit:

- the reinforcement lower cross member,
- the reinforcement lower cross member nuts.

❑ Refit:

- the engine undertray,
- the engine undertray bolts.

❑ Connect the battery (see **Battery: Removal - Refitting**) (MR 364, 80A, Battery).

F9Q

Tightening torques ▽	
engine tie-bar bolt on its support	**180 Nm**
engine tie-bar bolt on the subframe	**105 Nm**

REMOVAL

I - REMOVAL PREPARATION OPERATION

❑ Position the vehicle on a two-post lift (see **Vehicle: Towing and lifting**) (MR 364, 02A, Lifting equipment).

❑ Remove:

- the engine undertray bolts,
- the engine undertray.

II - OPERATION FOR REMOVAL OF PART CONCERNED

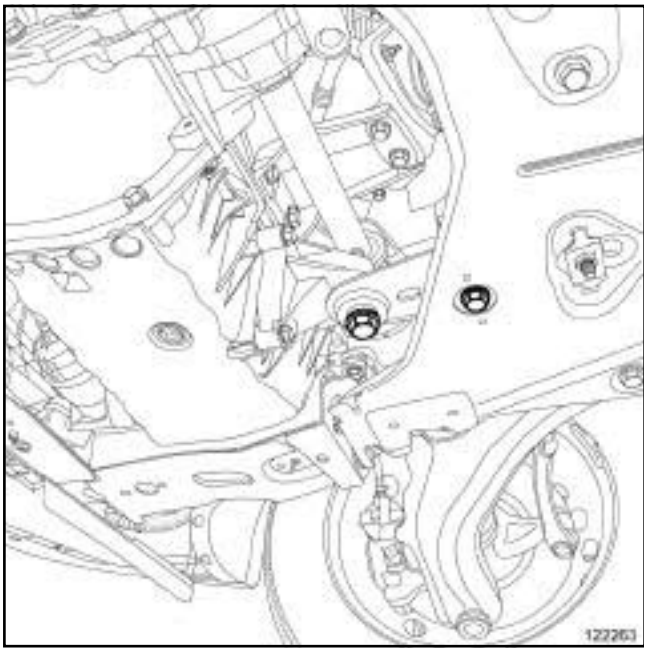

122263

❑ Remove:

- the engine tie-bar bolt from the subframe,
- the engine tie-bar bolt on its support,

REFITTING

I - REFITTING OPERATION FOR PART CONCERNED

❑ Refit:

- the engine tie-bar bolt on its support,
- the engine tie-bar bolt on the subframe.

❑ Torque tighten:

- the **engine tie-bar bolt on its support (180 Nm)**,
- the **engine tie-bar bolt on the subframe (105 Nm)**.

II - FINAL OPERATION.

❑ Refit:

- the engine undertray,
- the engine undertray bolts.